Construction Solicitation #6382,1 (BID)

425139: IRVING PARK ROAD BRIDGE OVER THE NORTH BRANCH OF THE CHICAGO RIVER E-5-038

Specification Number:425139

Required for use by: CHICAGO DEPARTMENT OF TRANSPORTATION

Bid/Proposal Submittal Date and Time: 11:00 AM Central Time, 07-AUG-2018

Deadline for Questions: 04:00 PM Central Time, 25-JUL-2018
Buyer: WARD, SONJI
Email Address: Sonji.Ward@cityofchicago.org
Phone Number: 3127444916
Pre-Solicitation Conference Date and Time: 01:00 PM Central Time, 10-JUL-2018
Pre-Solicitation Conference Location: 121 North LaSalle, Room 1103
Site Visit Date & Time: N/A
Site Visit Location: N/A

Please submit your response to:

Bid and Bond Room, City Hall Room 103
121 N LaSalle Street
Chicago, Illinois 60602

RAHM EMANUEL **MAYOR**	**JAMIE L. RHEE** **CHIEF PROCUREMENT OFFICER**

Specification Number: 425139
Type of Funding: FEDERAL
Title: 425139: IRVING PARK ROAD BRIDGE

Table of Contents

1 Header Information....10
1.1 General Information....10
1.2 Terms....10
1.3 Requirements....10
1.4 Attachments....14
1.5 Response Rules....14
2 Price Schedule....15
2.1 Line Information....15
2.2 Line Details....26
2.2.1 Line 1....26
2.2.2 Line 2....26
2.2.3 Line 3....26
2.2.4 Line 4....27
2.2.5 Line 5....27
2.2.6 Line 6....27
2.2.7 Line 7....27
2.2.8 Line 8....27
2.2.9 Line 9....27
2.2.10 Line 10....28
2.2.11 Line 11....28
2.2.12 Line 12....28
2.2.13 Line 13....28
2.2.14 Line 14....28
2.2.15 Line 15....28
2.2.16 Line 16....29
2.2.17 Line 17....29
2.2.18 Line 18....29
2.2.19 Line 19....29
2.2.20 Line 20....29
2.2.21 Line 21....29

2.2.22 Line 22.....30
2.2.23 Line 23.....30
2.2.24 Line 24.....30
2.2.25 Line 25.....30
2.2.26 Line 26.....30
2.2.27 Line 27.....30
2.2.28 Line 28.....31
2.2.29 Line 29.....31
2.2.30 Line 30.....31
2.2.31 Line 31.....31
2.2.32 Line 32.....31
2.2.33 Line 33.....31
2.2.34 Line 34.....32
2.2.35 Line 35.....32
2.2.36 Line 36.....32
2.2.37 Line 37.....32
2.2.38 Line 38.....32
2.2.39 Line 39.....32
2.2.40 Line 40.....33
2.2.41 Line 41.....33
2.2.42 Line 42.....33
2.2.43 Line 43.....33
2.2.44 Line 44.....33
2.2.45 Line 45.....33
2.2.46 Line 46.....34
2.2.47 Line 47.....34
2.2.48 Line 48.....34
2.2.49 Line 49.....34
2.2.50 Line 50.....34
2.2.51 Line 51.....34
2.2.52 Line 52.....35

2.2.53 Line 53.....35
2.2.54 Line 54.....35
2.2.55 Line 55.....35
2.2.56 Line 56.....35
2.2.57 Line 57.....35
2.2.58 Line 58.....36
2.2.59 Line 59.....36
2.2.60 Line 60.....36
2.2.61 Line 61.....36
2.2.62 Line 62.....36
2.2.63 Line 63.....36
2.2.64 Line 64.....37
2.2.65 Line 65.....37
2.2.66 Line 66.....37
2.2.67 Line 67.....37
2.2.68 Line 68.....37
2.2.69 Line 69.....37
2.2.70 Line 70.....38
2.2.71 Line 71.....38
2.2.72 Line 72.....38
2.2.73 Line 73.....38
2.2.74 Line 74.....38
2.2.75 Line 75.....38
2.2.76 Line 76.....39
2.2.77 Line 77.....39
2.2.78 Line 78.....39
2.2.79 Line 79.....39
2.2.80 Line 80.....39
2.2.81 Line 81.....39
2.2.82 Line 82.....40
2.2.83 Line 83.....40

2.2.84 Line 84.....40
2.2.85 Line 85.....40
2.2.86 Line 86.....40
2.2.87 Line 87.....40
2.2.88 Line 88.....41
2.2.89 Line 89.....41
2.2.90 Line 90.....41
2.2.91 Line 91.....41
2.2.92 Line 92.....41
2.2.93 Line 93.....41
2.2.94 Line 94.....42
2.2.95 Line 95.....42
2.2.96 Line 96.....42
2.2.97 Line 97.....42
2.2.98 Line 98.....42
2.2.99 Line 99.....42
2.2.100 Line 100.....43
2.2.101 Line 101.....43
2.2.102 Line 102.....43
2.2.103 Line 103.....43
2.2.104 Line 104.....43
2.2.105 Line 105.....43
2.2.106 Line 106.....44
2.2.107 Line 107.....44
2.2.108 Line 108.....44
2.2.109 Line 109.....44
2.2.110 Line 110.....44
2.2.111 Line 111.....44
2.2.112 Line 112.....45
2.2.113 Line 113.....45
2.2.114 Line 114.....45

2.2.115 Line 115.....45

2.2.116 Line 116.....45

2.2.117 Line 117.....45

2.2.118 Line 118.....46

2.2.119 Line 119.....46

2.2.120 Line 120.....46

2.2.121 Line 121.....46

2.2.122 Line 122.....46

2.2.123 Line 123.....46

2.2.124 Line 124.....47

2.2.125 Line 125.....47

2.2.126 Line 126.....47

2.2.127 Line 127.....47

2.2.128 Line 128.....47

2.2.129 Line 129.....47

2.2.130 Line 130.....48

2.2.131 Line 131.....48

2.2.132 Line 132.....48

2.2.133 Line 133.....48

2.2.134 Line 134.....48

2.2.135 Line 135.....48

2.2.136 Line 136.....49

2.2.137 Line 137.....49

2.2.138 Line 138.....49

2.2.139 Line 139.....49

2.2.140 Line 140.....49

2.2.141 Line 141.....49

2.2.142 Line 142.....50

2.2.143 Line 143.....50

2.2.144 Line 144.....50

2.2.145 Line 145.....50

2.2.146 Line 146.....50

2.2.147 Line 147.....50

2.2.148 Line 148.....51

2.2.149 Line 149.....51

2.2.150 Line 150.....51

2.2.151 Line 151.....51

2.2.152 Line 152.....51

2.2.153 Line 153.....51

2.2.154 Line 154.....52

2.2.155 Line 155.....52

2.2.156 Line 156.....52

2.2.157 Line 157.....52

2.2.158 Line 158.....52

2.2.159 Line 159.....52

2.2.160 Line 160.....53

2.2.161 Line 161.....53

2.2.162 Line 162.....53

2.2.163 Line 163.....53

2.2.164 Line 164.....53

2.2.165 Line 165.....53

2.2.166 Line 166.....54

2.2.167 Line 167.....54

2.2.168 Line 168.....54

2.2.169 Line 169.....54

2.2.170 Line 170.....54

2.2.171 Line 171.....54

2.2.172 Line 172.....55

2.2.173 Line 173.....55

2.2.174 Line 174.....55

2.2.175 Line 175.....55

2.2.176 Line 176.....55

2.2.177 Line 177.....55
2.2.178 Line 178.....56
2.2.179 Line 179.....56
2.2.180 Line 180.....56
2.2.181 Line 181.....56
2.2.182 Line 182.....56
2.2.183 Line 183.....56
2.2.184 Line 184.....57
2.2.185 Line 185.....57
2.2.186 Line 186.....57
2.2.187 Line 187.....57
2.2.188 Line 188.....57
2.2.189 Line 189.....58
2.2.190 Line 190.....58
2.2.191 Line 191.....58
2.2.192 Line 192.....58
2.2.193 Line 193.....58
2.2.194 Line 194.....58
2.2.195 Line 195.....59
2.2.196 Line 196.....59
2.2.197 Line 197.....59
2.2.198 Line 198.....59
2.2.199 Line 199.....59
2.2.200 Line 200.....59
2.2.201 Line 201.....60
2.2.202 Line 202.....60
2.2.203 Line 203.....60
2.2.204 Line 204.....60
2.2.205 Line 205.....60
2.2.206 Line 206.....60
2.2.207 Line 207.....61

2.2.208 Line 208.....61

2.2.209 Line 209.....61

2.2.210 Line 210.....61

2.2.211 Line 211.....61

2.2.212 Line 212.....61

1 Header Information

1.1 General Information

Title	**425139: IRVING PARK ROAD BRIDGE**
Description	**425139: IRVING PARK ROAD BRIDGE OVER THE NORTH BRANCH OF THE CHICAGO RIVER E-5-038**
Amendment Date	**27-JUN-2018 13:53:18**
Amendment Description	**CLARIFICATION #1**

Preview Date	**27-JUN-2018 08:30:00**	Open Date	**27-JUN-2018 08:30:00**
Close Date	**11:00 AM Central Time, 07-AUG-2018**	Award Date	**Not Specified**
Time Zone	**Central Time**	Buyer	**WARD, SONJI**
Quote Style	**Sealed**	Email	**Sonji.Ward@cityofchicago.org**
Event	**Construction**	Outcome	**Construction Standard PO**

1.2 Terms

Ship-To Address	**084- CDOT RM400 30 N. LA SALLE ST. ROOM 400 Chicago, IL 60602 United States**	Bill-To Address	**084- CDOT RM400 30 N. LA SALLE ST. ROOM 400 Chicago, IL 60602 United States**
Payment Terms	**IMMEDIATE**	Carrier	
FOB		Freight Terms	

1.3 Requirements

KEY SOLICITATION PARAMETERS
BID DEPOSIT: 5% of Total Base Bid ..... Type **No Response Required**
PERFORMANCE BOND: Full Amount of Total Base Bid ..... Type **No Response Required**
CONTRACT SPECIFIC GOALS: DBE Participation Goal 25% of Total Base Bid ..... Type **No Response Required**
FUNDING SOURCE: Federal Funded - Non FTA ..... Type **No Response Required**
FUND NUMBER: 01-015-0400-084-2015-0140-220140 ..... Type **No Response Required**
DPS UNIT: Construction ..... Type **No Response Required**
DRAWINGS: Yes ..... Type **No Response Required** Value Type **Numeric Value only**
MAPS: ..... Type **No Response Required**

KEY SOLICITATION PARAMETERS
Value Type **Numeric Value only**
CONTRACT TERM: N/A ..... Type **No Response Required**
PRE-BID/PRE-PROPOSAL CONFERENCE: ..... Type **No Response Required**
BIDDER QUESTIONS
Any deviations from or exceptions to any provisions or requirements of the bidding documents, including but not limited to the specifications of the goods and/or services to be provided, must be noted here or in an attachment, with the exact nature of the change outlined in sufficient detail, and as provided in the contract terms and conditions "Trade Names and Substitutions," as applicable. Bidder must provide the reason for which deviations were made. Failure of a bidder to comply with the terms of this paragraph may be cause for rejection of its bid. ..... Type **Optional** ..... Provide your answer below
Enter the EDS number from your EDS Certificate and attach the certificate. ..... Value Type **Numeric Value only** ..... Provide your answer below
COMMODITIES/WORK SERVICES/HEAVY EQUIPMENT/SMALL ORDERS/CONSTRUCTION/JOC CHECKLIST
This is a checklist of all supporting documents that must be attached to your bid response. Attach all documents specified below. After attaching, click "YES" to indicate that the attachment was completed. ..... Type **No Response Required**
- Bid Form properly completed. - (Construction) ..... Circle one from the response values below: YES NO
- Schedule of Prices, completed and totaled. - (Construction) ..... Circle one from the response values below: YES NO
- Proposal Page completed, signed and notarized - (ALL) .....

COMMODITIES/WORK SERVICES/HEAVY EQUIPMENT/SMALL ORDERS/CONSTRUCTION/JOC CHECKLIST
Circle one from the response values below: YES NO
- Proposal To Be Completed By a Corporation - (ALL) ..... Circle one from the response values below: YES NO
- Proposal To Be Completed By a Partnership - (ALL) ..... Circle one from the response values below: YES NO
- Proposal To Be Completed By a Joint Venture - (ALL) ..... Circle one from the response values below: YES NO
- Proposal To Be Completed By a Sole Proprietor - (ALL) ..... Circle one from the response values below: YES NO
- Bid Execution Page - (ALL) ..... Circle one from the response values below: YES NO
- Performance Bond (Construction) ..... Circle one from the response values below: YES NO
- Certificate of Filing of Economic Disclosure Statement and Affidavit (EDS) - (ALL) ..... Circle one from the response values below: YES NO
- Certificate of Insurance ..... Circle one from the response values below: YES NO
- Manuals, Certificates, Applications(if required) ..... Circle one from the response values below: YES NO
- Bidder Contact Information - (ALL) ..... Circle one from the response values below: YES NO

COMMODITIES/WORK SERVICES/HEAVY EQUIPMENT/SMALL ORDERS/CONSTRUCTION/JOC CHECKLIST
- Bidder qualifications and/or certifications, permits, licenses, vehicle stickers, etc. (if required) ..... Circle one from the response values below: YES NO
- Affidavit of Uncompleted Work (Construction) ..... Circle one from the response values below: YES NO
- Affidavit of Availability (Construction) ..... Circle one from the response values below: YES NO
- Department of Procurement Services Bid Bond (Construction) ..... Circle one from the response values below: YES NO
- Contractor's Affidavit Regarding Removal of All Waster Materials and Identification of all Legal Dump Sites (Construction) ..... Circle one from the response values below: YES NO
- Schedule AP: Letter of Intent to Hire/Sponsor Union Apprentices (Construction) ..... Circle one from the response values below: YES NO
- Exhibit D, DBE Requirement for Bidder/Proposer List completed (Construction) ..... Circle one from the response values below: YES NO
DBE DOCUMENTS – CONSTRUCTION (Federal) ..... Type **No Response Required**
- Schedule B — DBE Affidavit of Joint Venture (Construction) ..... Circle one from the response values below: YES NO
- Schedule C — Letter of Intent from DBE (Construction) ..... Circle one from the response values below: YES NO
- Schedule D — Affidavit of Prime Contractor-DBE (Construction) ..... Circle one from the response values below:

COMMODITIES/WORK SERVICES/HEAVY EQUIPMENT/SMALL ORDERS/CONSTRUCTION/JOC CHECKLIST
YES NO
- Schedule F – Report of Subcontractor Solicitations – (Construction) ..... Circle one from the response values below: YES NO
- Schedule H – Documentation of Good Faith Efforts (Construction) ..... Circle one from the response values below: YES NO
- DBE Full or Partial Waiver Requested - (Construction) ..... Circle one from the response values below: YES NO

1.4 Attachments

Name	Data Type	Description
ATTACHMENT 01: BOOK 1	Web Page	ATTACHMENT 01: BOOK 1
ATTACHMENT 02: BOOK 2	Web Page	ATTACHMENT 02: BOOK 2
ATTACHMENT 03: BOOK 3	Web Page	ATTACHMENT 03: BOOK 3
ATTACHMENT 04: PLANS	Web Page	ATTACHMENT 04: PLANS
ATTACHMENT 05: INDEX for DRAWINGS	Web Page	ATTACHMENT 05: INDEX for DRAWINGS
ATTACHMENT 06: DRAWINGS	Web Page	ATTACHMENT 06: DRAWINGS
ATTACHMENT 07: APPENDIX	Web Page	ATTACHMENT 07: APPENDIX

1.5 Response Rules

- ☐ Solicitation is restricted to invited suppliers
- ☐ Suppliers are allowed to view other suppliers' contract terms, notes and attachments
- ☐ Suppliers are allowed to respond to selected lines
- ☒ Suppliers are required to respond with full quantity on each line
- ☒ Suppliers are allowed to provide multiple responses
- ☐ Buyer may close the solicitation before the Close Date
- ☐ Buyer may manually extend the solicitation while it is open

2 Price Schedule

2.1 Line Information

Display Rank As **No indicator displayed**
Ranking **Price Only**
Cost Factors **None**

Retainage

Retainage Attributes	Negotiable
Maximum Retainage Amount	No
Retainage Rate (%)	No

Line	Item, Rev	Target Quantity	Unit	Unit Price	Amount
1 TREE PROTECTION		1,300	Foot		
2 TREE REMOVAL (OVER 15 UNITS DIAMETER)		131	Unit		
3 TREE REMOVAL (6 TO 15 UNITS DIAMETER)		762	Unit		
4 EARTH EXCAVATION		2,813	Cubic Yard		
5 REMOVAL AND DISPOSAL OF UNSUITABLE MATERIAL		2,100	Cubic Yard		
6 FURNISHED EXCAVATION		701	Cubic Yard		
7 GEOTECHNICAL FABRIC FOR GROUND STABILIZATION		1,264	Square Yard		
8 PULVERIZED TOPSOIL MIX		11	Cubic Yard		
9 TOPSOIL FURNISH AND PLACE, SPECIAL		50	Cubic Yard		
10 TOPSOIL EXCAVATION AND PLACEMENT , SPECIAL		510	Cubic Yard		
11 NITROGEN FERTILIZER NUTRIENT		5	Pound		
12 POTASSIUM FERTILIZER NUTRIENT		5	Pound		
13 SUPPLEMENTAL WATERING		1	Unit		
14 SODDING, SALT TOLERANT		69	Square Yard		
15 PARKWAY AND TREEPIT TREES		3	Each		
16 EARTH EXCAVATION FOR EROSION CONTROL		225	Cubic Yard		

Line	Item, Rev	Target Quantity	Unit	Unit Price	Amount
17 TEMPORARY EROSION CONTROL SEEDING		79	Pound		
18 TEMPORARY DITCH CHECKS		33	Foot		
19 PERIMETER EROSION BARRIER		1,851	Foot		
20 INLET FILTERS		30	Each		
21 AGGREGATE (EROSION CONTROL)		3	Ton		
22 TEMPORARY EROSION CONTROL BLANKET		4,550	Square Yard		
23 STONE RIPRAP, CLASS A5		600	Square Yard		
24 FILTER FABRIC		683	Square Yard		
25 ARTICULATED BLOCK REVETMENT MAT		119	Square Yard		
26 AGGREGATE SUBGRADE IMPROVEMENT 12"		1,130	Square Yard		
27 STRUCTURAL SOIL		12	Cubic Yard		
28 SAND CUSHION, VARIABLE DEPTH		74	Cubic Yard		
29 AGGREGATE BASE COURSE, TYPE B 6"		1,264	Square Yard		
30 TEMPORARY PAVEMENT		475	Square Yard		
31 PORTLAND CEMENT CONCRETE BASE COURSE 11"		890	Square Yard		
32 BITUMINOUS MATERIALS (TACK COAT)		2,479	Pound		
33 LEVELING BINDER (HAND METHOD), N70		35	Ton		
34 POLYMERIZED LEVELING BINDER (MACHINE METHOD), IL-4.75, N50		306	Ton		
35 HOT-MIX ASPHALT SURFACE REMOVAL - BUTT JOINT		167	Square Yard		
36 TEMPORARY RAMP		667	Square Yard		
37 POLYMERIZED HOT-MIX ASPHALT SURFACE COURSE,		680	Ton		

Line	Item, Rev	Target Quantity	Unit	Unit Price	Amount
STONE MATRIX ASPHALT, N80					
38 HOT-MIX ASPHALT SURFACE COURSE, IL-9.5L, MIX "C", N30 (CDOT)		432	Ton		
39 PAVEMENT CONNECTOR (PCC) FOR BRIDGE APPROACH SLAB		222	Square Yard		
40 PORTLAND CEMENT CONCRETE SIDEWALK, 5"		5,960	Square Foot		
41 PORTLAND CEMENT CONCRETE ADA RAMP 8 INCH		25	Square Foot		
42 PAVEMENT REMOVAL		179	Square Yard		
43 CURB REMOVAL		749	Foot		
44 COMBINATION CURB AND GUTTER REMOVAL		901	Foot		
45 SIDEWALK REMOVAL		6,585	Square Foot		
46 MEDIAN REMOVAL		2,002	Square Foot		
47 HOT-MIX ASPHALT SURFACE REMOVAL, VARIABLE DEPTH		5,837	Square Yard		
48 DOWEL BARS 1 1/4"		62	Each		
49 SAW CUTS		626	Foot		
50 TIE BARS 1 1/4"		472	Each		
51 REMOVAL OF EXISTING STRUCTURES		1	Lump Sum		
52 CONCRETE REMOVAL		30	Cubic Yard		
53 PROTECTIVE SHIELD		1,225	Square Yard		
54 STRUCTURE EXCAVATION		95	Cubic Yard		
55 COFFERDAM EXCAVATION		493	Cubic Yard		
56 COFFERDAM (TYPE 1) (LOCATION - 1)		1	Each		
57 COFFERDAM (TYPE 1) (LOCATION - 2)		1	Each		
58 BRIDGE DECK GROOVING		1,986	Square Yard		
59 FORM LINER TEXTURED		1,253	Square Foot		

Line	Item, Rev	Target Quantity	Unit	Unit Price	Amount
SURFACE					
60 DRAINAGE SCUPPERS, DS-12		4	Each		
61 HIGH PERFORMANCE CONCRETE STRUCTURES		1,626.1	Cubic Yard		
62 HIGH PERFORMANCE CONCRETE SUPERSTRUCTURES		951.4	Cubic Yard		
63 LATEX CONCRETE OVERLAY FOR NEW BRIDGE DECK, 2-1/4 INCH		2,001	Square Yard		
64 STUD SHEAR CONNECTORS		13,252	Each		
65 FURNISHING AND ERECTING STRUCTURAL STEEL		1	Lump Sum		
66 REINFORCEMENT BARS, EPOXY COATED		329,700	Pound		
67 BAR SPLICERS		2,940	Each		
68 NAME PLATES		1	Each		
69 PREFORMED JOINT STRIP SEAL		202	Foot		
70 ELASTOMERIC BEARING ASSEMBLY, TYPE II		42	Each		
71 ANCHOR BOLTS, 5/8"		28	Each		
72 ANCHOR BOLTS, 1 1/4"		84	Each		
73 PERMANENT SHEET PILING		11,680	Square Foot		
74 FURNISHING SOLDIER PILES (HP SECTION)		1,036	Foot		
75 DRIVING SOLDIER PILES		1,036	Foot		
76 UNTREATED TIMBER LAGGING		928	Square Foot		
77 SEGMENTAL CONCRETE BLOCK WALL		250	Square Foot		
78 CONCRETE STRUCTURES (RETAINING WALL)		27	Cubic Yard		
79 PRECAST REINFORCED CONCRETE FLARED END SECTIONS 12"		1	Each		
80 CAST-IN-PLACE		1	Each		

Line	Item, Rev	Target Quantity	Unit	Unit Price	Amount
REINFORCED CONCRETE END SECTIONS 72"					
81 CONCRETE COLLAR		10	Cubic Yard		
82 STORM SEWERS, CLASS A, TYPE 1 12"		97	Foot		
83 DUCTILE IRON WATER MAIN 12"		535	Foot		
84 FIRE HYDRANTS TO BE REMOVED		3	Each		
85 FIRE HYDRANTS		2	Each		
86 CONCRETE SEALER		14,825	Square Foot		
87 PROTECTIVE CONCRETE SEALER		2,946	Square Yard		
88 GEOCOMPOSITE WALL DRAIN		797	Square Yard		
89 CONTROLLED LOW-STRENGTH MATERIAL		34	Cubic Yard		
90 CATCH BASINS, TYPE A, 4'-DIAMETER, TYPE 9 FRAME AND GRATE		1	Each		
91 CATCH BASINS, TYPE A, 4'-DIAMETER, TYPE 10 FRAME AND GRATE		1	Each		
92 MANHOLE TYPE A, 4' DIAMETER, TYPE 1 FRAME, CLOSED LID		1	Each		
93 INLETS, TYPE A, TYPE 10 FRAME AND GRATE		1	Each		
94 CATCHBASINS TO BE ADJUSTED		4	Each		
95 MANHOLES TO BE ADJUSTED		10	Each		
96 VALVE VAULTS TO BE ADJUSTED		5	Each		
97 CONCRETE CURB, TYPE B		202	Foot		
98 CONCRETE GUTTER, TYPE B		451	Foot		
99 COMBINATION CONCRETE CURB AND GUTTER, TYPE B-V.12		579	Foot		
100 TEMPORARY CHAIN LINK FENCE WITH SCREENING, 6'		1,192	Foot		
101 RELOCATE		1,192	Foot		

Line	Item, Rev	Target Quantity	Unit	Unit Price	Amount
TEMPORARY CHAIN LINK FENCE WITH SCREENING					
102 ENGINEER'S FIELD OFFICE		22	Month		
103 MOBILIZATION		1	Lump Sum		
104 NON SPECIAL WASTE DISPOSAL		1,500	Cubic Yard		
105 SPECIAL WASTE DISPOSAL		50	Cubic Yard		
106 SPECIAL WASTE PLANS AND REPORTS		1	Lump Sum		
107 SOIL DISPOSAL ANALYSIS		12	Each		
108 TCL SOIL ANALYSIS		12	Each		
109 CHANGEABLE MESSAGE SIGN		44	Month		
110 SHORT TERM PAVEMENT MARKING		925	Foot		
111 SHORT TERM PAVEMENT MARKING REMOVAL		305	Square Foot		
112 TEMPORARY PAVEMENT MARKING - LINE 4"		13,066	Foot		
113 TEMPORARY PAVEMENT MARKING - LINE 12"		440	Foot		
114 TEMPORARY CONCRETE BARRIER		1,863	Foot		
115 RELOCATE TEMPORARY CONCRETE BARRIER		2,150	Foot		
116 IMPACT ATTENUATORS, TEMPORARY (FULLY REDIRECTIVE, NARROW), TEST LEVEL 2		5	Each		
117 IMPACT ATTENUATORS, RELOCATE (FULLY REDIRECTIVE, NARROW), TEST LEVEL 2		6	Each		
118 WOOD SIGN SUPPORT		27	Foot		
119 THERMOPLASTIC		579	Foot		

Line	Item, Rev	Target Quantity	Unit	Unit Price	Amount
PAVEMENT MARKING - LINE 12"					
120 THERMOPLASTIC PAVEMENT MARKING - LINE 4"		5,299	Foot		
121 THERMOPLASTIC PAVEMENT MARKING - LINE 6"		270	Foot		
122 THERMOPLASTIC PAVEMENT MARKING - LINE 24"		43	Foot		
123 THERMOPLASTIC PAVEMENT MARKING - LETTERS AND square YardMBOLS		30	Square Foot		
124 POLYUREA PAVEMENT MARKING TYPE I - LINE 4"		1,089	Foot		
125 POLYUREA PAVEMENT MARKING TYPE I - LINE 6"		843	Foot		
126 POLYUREA PAVEMENT MARKING TYPE I - LINE 12"		153	Foot		
127 BARRIER WALL REFLECTOR, TYPE B		38	Each		
128 PAVEMENT MARKING REMOVAL		6,138	Square Foot		
129 UNDERGROUND CONDUIT, PVC, 2" DIA.		225	Foot		
130 CONDUIT ATTACHED TO STRUCTURE, 3/4" DIA., GALVANIZED STEEL		182	Foot		
131 JUNCTION BOX, STAINLESS STEEL, ATTACHED TO STRUCTURE, 6" X 6" X 4"		6	Each		
132 JUNCTION BOX, STAINLESS STEEL, ATTACHED TO STRUCTURE, 12" X 12" X 6"		1	Each		
133 PERMANENT		27	Each		

Line	Item, Rev	Target Quantity	Unit	Unit Price	Amount
GROUND ANCHOR					
134 MICRO-PILES		154	Each		
135 WOODEN POLE REMOVAL		1	Each		
136 MICROPILE LOAD TEST		4	Each		
137 MICROPILE PROOF LOAD TEST		12	Each		
138 EROSION CONTROL, TEMPORARY PIPE SLOPE DRAIN		2	Each		
139 REMOVE TEMPORARY PIPE SLOPE DRAIN		2	Each		
140 TREE GRATE REMOVAL		7	Each		
141 GRATING FOR CONCRETE HEADWALL NO 1		1	Each		
142 BRACED EXCAVATION		2,075	Cubic Yard		
143 ORNAMENTAL FENCE		630	Foot		
144 ORNAMENTAL RAILING		653	Foot		
145 GRANULAR BACKFILL FOR STRUCTURES		1,640	Cubic Yard		
146 PAVED DITCH (SPECIAL)		22	Foot		
147 CHAIN LINK FENCE, 5' (SPECIAL)		197	Foot		
148 TRAFFIC CONTROL AND PROTECTION, (SPECIAL)		1	Lump Sum		
149 HANDHOLE (SPECIAL)		1	Each		
150 STEEL RAILING (SPECIAL)		795	Foot		
151 HANDRAIL REMOVAL		133	Foot		
152 TEMPORARY SIDEWALK		963	Square Foot		
153 STRUCTURAL REPAIR OF CONCRETE (DEPTH EQUAL TO OR LESS THAN 5 INCHES)		27	Square Foot		
154 STABILIZED CONSTRUCTION ENTRANCE		224	Square Yard		
155 CONSTRUCTION LAYOUT		1	Lump Sum		
156 TEMPORARY INFORMATION		52	Square Foot		

Line	Item, Rev	Target Quantity	Unit	Unit Price	Amount
SIGNING					
157 PIPE UNDERDRAINS FOR STRUCTURES 4"		670	Foot		
158 SUBBASE GRANULAR MATERIAL, NON-LIMESTONE		5	Cubic Yard		
159 PERMEABLE PAVERS		264	Square Foot		
160 PERMEABLE PAVER REMOVAL		923	Square Foot		
161 GRADING AND SHAPING SHARED USE PATH		8	Unit		
162 MAINTENANCE OF ACCESS TO ABUTTING PROPERTIES		1	Lump Sum		
163 CAST IRON TREE GRATES, GRATE FRAMES, AND THICKENED SLAB, 5' BY 10'		3	Each		
164 REMOVAL OF EXISTING WOODCHIP TRAIL		2,250	Square Foot		
165 MULCH TRAIL		510	Foot		
166 REMOVE EXISTING SIGN PANEL AND SALVAGE		12	Each		
167 REMOVE EXISTING SIGN PANEL AND POLE ASSEMBLY, FROM SIDEWALK, AND SALVAGE		2	Each		
168 FURNISH SIGN PANEL, TYPE 1, REFLECTIVE, TYPE A, SINGLE-SIDED		56	Square Foot		
169 FURNISH SIGN PANEL, TYPE 1, REFLECTIVE, TYPE A, DOUBLE-SIDED		14	Square Foot		
170 FURNISH AND INSTALL PROJECT SIGN, TYPE A		2	Each		
171 FURNISH AND INSTALL PROJECT SIGN, TYPE B		2	Each		
172 FURNISH AND INSTALL PROJECT SIGN, BANNER		1	Each		
173 FURNISH AND INSTALL POLE,		9	Each		

Line	Item, Rev	Target Quantity	Unit	Unit Price	Amount
DRILL METHOD					
174 INSTALL SIGN PANEL TY. 1, CENTER MOUNT ON SIGN POLE		13	Each		
175 INSTALL SIGN PANEL TY. 1, FLAG MOUNT ON SIGN POLE		6	Each		
176 TRENCH AND BACKFILL WITH SCREENINGS		888	Foot		
177 ELECTRICAL HANDHOLE, 30", 24" FRAME AND LID		2	Each		
178 DRILL EXISTING MANHOLE OR HANDHOLE		20	Each		
179 GALVANIZED STEEL CONDUIT ATTACHED TO STRUCTURE 2"		874	Foot		
180 PVC CONDUIT IN TRENCH 2"		1,279	Foot		
181 GALVANIZED STEEL CONDUIT IN TRENCH 2"		15	Foot		
182 GALVANIZED STEEL CONDUIT IN TRENCH 3"		15	Foot		
183 GALVANIZED STEEL CONDUIT ATTACHED TO STRUCTURE 4"		580	Foot		
184 CONCRETE FOUNDATION, 28" DIAMETER, 1 1/4" ANCHOR RODS, 15" BOLT CIRCLE, 7 FEET		6	Each		
185 CONCRETE FOUNDATION, 30" DIAMETER, 1" ANCHOR RODS, 15" BOLT CIRCLE, 7 FEET		2	Each		
186 ELBOW, CONDUIT, STEEL, 2" ADJACENT TO EMBEDDED POLE/STRUCTURE		3	Each		
187 CONDUIT RISER UP POLE 2"		3	Each		
188 ELECTRIC CABLE IN CONDUIT, 1/C NO. 6		1,154	Foot		
189 ELECTRIC		1,340	Foot		

Line	Item, Rev	Target Quantity	Unit	Unit Price	Amount
CABLE IN CONDUIT, TRIPLEX, 2 1/C NO. 6, 1 1/C NO. 8					
190 CHICAGO 2000 STREET LIGHT UNIT		8	Each		
191 EXTENDED LOOP LIGHT UNIT		2	Each		
192 LUMINAIRE, CHICAGO 2000 PENDANT, LED, TYPE III		11	Each		
193 LUMINAIRE, ORNAMENTAL, ACORN, LED, TYPE III		4	Each		
194 MAINTAIN EXISTING LIGHTING square YardSTEM		1	Lump Sum		
195 MAINTENANCE OF EXISTING FIRE ALARM CABLE, AND DISCONNECTION AND RECONNECTION OF INTERCONNECT CABLE		1	Lump Sum		
196 REMOVE EXISTING STREET LIGHTING EQUIPMENT		1	Lump Sum		
197 BREAKDOWN EXISTING HANDHOLE		1	Each		
198 BREAKDOWN MANHOLE IN PARKWAY		1	Each		
199 BREAKDOWN STREET LIGHT FOUNDATION		4	Each		
200 TRENCH AND BACKFILL FOR ELECTRICAL WORK		156	Foot		
201 ELECTRIC CABLE IN TRENCH, 600V (XLP-TYPE USE) 1/C NO. 6		2,442	Foot		
202 ELECTRIC CABLE IN TRENCH, 600V (XLP-TYPE USE) 1/C NO. 8		841	Foot		
203 ELECTRIC CABLE IN CONDUIT, 600V (XLP-TYPE USE) 1/C NO. 10		817	Foot		
204 PATH LIGHT		5	Each		

Line	Item, Rev	Target Quantity	Unit	Unit Price	Amount
FIXTURE					
205 PATH UNDERPASS LUMINAIRE		6	Each		
206 PATH LIGHT POLE		5	Each		
207 CONTROLLER, UNDERPASS LIGHTING, WALL MOUNTED, 1 PHASE, 60 AMP		1	Each		
208 SERVICE CONNECTION TO CECO LINE		1	Each		
209 SERVICE INSTALLATION, 100 AMP		1	Each		
210 SERVICE CABLE, 3/C NO. 2		616	Foot		
211 MONITORING OF EXISTING FACILITIES		1	Lump Sum		
212 TRAINEES		3,000	Hour		

2.2 Line Details

2.2.1 Line 1 TREE PROTECTION

Category **91313..**
Need-By Date **Not Specified**
Ship-To Address **084- CDOT RM400**
30 N. LA SALLE ST.
ROOM 400
Chicago, IL 60602
United States

Start Price (USD) **Not Specified**
Target Price (USD) **Not Specified**

2.2.2 Line 2 TREE REMOVAL (OVER 15 UNITS DIAMETER)

Category **91313..**
Need-By Date **Not Specified**
Ship-To Address **084- CDOT RM400**
30 N. LA SALLE ST.
ROOM 400
Chicago, IL 60602
United States

Start Price (USD) **Not Specified**
Target Price (USD) **Not Specified**

2.2.3 Line 3 TREE REMOVAL (6 TO 15 UNITS DIAMETER)

Category **91313..**
Need-By Date **Not Specified**
Ship-To Address **084- CDOT RM400**
30 N. LA SALLE ST.
ROOM 400
Chicago, IL 60602
United States

Start Price (USD) **Not Specified**
Target Price (USD) **Not Specified**

2.2.4 Line 4 EARTH EXCAVATION

Category **91313..**
Need-By Date **Not Specified**
Ship-To Address **084- CDOT RM400**
30 N. LA SALLE ST.
ROOM 400
Chicago, IL 60602
United States

Start Price (USD) **Not Specified**
Target Price (USD) **Not Specified**

2.2.5 Line 5 REMOVAL AND DISPOSAL OF UNSUITABLE MATERIAL

Category **91313..**
Need-By Date **Not Specified**
Ship-To Address **084- CDOT RM400**
30 N. LA SALLE ST.
ROOM 400
Chicago, IL 60602
United States

Start Price (USD) **Not Specified**
Target Price (USD) **Not Specified**

2.2.6 Line 6 FURNISHED EXCAVATION

Category **91313..**
Need-By Date **Not Specified**
Ship-To Address **084- CDOT RM400**
30 N. LA SALLE ST.
ROOM 400
Chicago, IL 60602
United States

Start Price (USD) **Not Specified**
Target Price (USD) **Not Specified**

2.2.7 Line 7 GEOTECHNICAL FABRIC FOR GROUND STABILIZATION

Category **91313..**
Need-By Date **Not Specified**
Ship-To Address **084- CDOT RM400**
30 N. LA SALLE ST.
ROOM 400
Chicago, IL 60602
United States

Start Price (USD) **Not Specified**
Target Price (USD) **Not Specified**

2.2.8 Line 8 PULVERIZED TOPSOIL MIX

Category **91313..**
Need-By Date **Not Specified**
Ship-To Address **084- CDOT RM400**
30 N. LA SALLE ST.
ROOM 400
Chicago, IL 60602
United States

Start Price (USD) **Not Specified**
Target Price (USD) **Not Specified**

2.2.9 Line 9 TOPSOIL FURNISH AND PLACE, SPECIAL

Category **91313..**
Need-By Date **Not Specified**
Ship-To Address **084- CDOT RM400**
30 N. LA SALLE ST.
ROOM 400
Chicago, IL 60602
United States

Start Price (USD) **Not Specified**
Target Price (USD) **Not Specified**

2.2.10 Line 10 TOPSOIL EXCAVATION AND PLACEMENT , SPECIAL

Category	**91313..**	Start Price (USD)	**Not Specified**
Need-By Date	**Not Specified**	Target Price (USD)	**Not Specified**
Ship-To Address	**084- CDOT RM400** **30 N. LA SALLE ST.** **ROOM 400** **Chicago, IL 60602** **United States**		

2.2.11 Line 11 NITROGEN FERTILIZER NUTRIENT

Category	**91313..**	Start Price (USD)	**Not Specified**
Need-By Date	**Not Specified**	Target Price (USD)	**Not Specified**
Ship-To Address	**084- CDOT RM400** **30 N. LA SALLE ST.** **ROOM 400** **Chicago, IL 60602** **United States**		

2.2.12 Line 12 POTASSIUM FERTILIZER NUTRIENT

Category	**91313..**	Start Price (USD)	**Not Specified**
Need-By Date	**Not Specified**	Target Price (USD)	**Not Specified**
Ship-To Address	**084- CDOT RM400** **30 N. LA SALLE ST.** **ROOM 400** **Chicago, IL 60602** **United States**		

2.2.13 Line 13 SUPPLEMENTAL WATERING

Category	**91313..**	Start Price (USD)	**Not Specified**
Need-By Date	**Not Specified**	Target Price (USD)	**Not Specified**
Ship-To Address	**084- CDOT RM400** **30 N. LA SALLE ST.** **ROOM 400** **Chicago, IL 60602** **United States**		

2.2.14 Line 14 SODDING, SALT TOLERANT

Category	**91313..**	Start Price (USD)	**Not Specified**
Need-By Date	**Not Specified**	Target Price (USD)	**Not Specified**
Ship-To Address	**084- CDOT RM400** **30 N. LA SALLE ST.** **ROOM 400** **Chicago, IL 60602** **United States**		

2.2.15 Line 15 PARKWAY AND TREEPIT TREES

Category	**91313..**	Start Price (USD)	**Not Specified**
Need-By Date	**Not Specified**	Target Price (USD)	**Not Specified**
Ship-To Address	**084- CDOT RM400** **30 N. LA SALLE ST.** **ROOM 400** **Chicago, IL 60602** **United States**		

2.2.16 Line 16 EARTH EXCAVATION FOR EROSION CONTROL

Category	**91313..**	Start Price (USD)	**Not Specified**
Need-By Date	**Not Specified**	Target Price (USD)	**Not Specified**
Ship-To Address	**084- CDOT RM400** **30 N. LA SALLE ST.** **ROOM 400** **Chicago, IL 60602** **United States**		

2.2.17 Line 17 TEMPORARY EROSION CONTROL SEEDING

Category	**91313..**	Start Price (USD)	**Not Specified**
Need-By Date	**Not Specified**	Target Price (USD)	**Not Specified**
Ship-To Address	**084- CDOT RM400** **30 N. LA SALLE ST.** **ROOM 400** **Chicago, IL 60602** **United States**		

2.2.18 Line 18 TEMPORARY DITCH CHECKS

Category	**91313..**	Start Price (USD)	**Not Specified**
Need-By Date	**Not Specified**	Target Price (USD)	**Not Specified**
Ship-To Address	**084- CDOT RM400** **30 N. LA SALLE ST.** **ROOM 400** **Chicago, IL 60602** **United States**		

2.2.19 Line 19 PERIMETER EROSION BARRIER

Category	**91313..**	Start Price (USD)	**Not Specified**
Need-By Date	**Not Specified**	Target Price (USD)	**Not Specified**
Ship-To Address	**084- CDOT RM400** **30 N. LA SALLE ST.** **ROOM 400** **Chicago, IL 60602** **United States**		

2.2.20 Line 20 INLET FILTERS

Category	**91313..**	Start Price (USD)	**Not Specified**
Need-By Date	**Not Specified**	Target Price (USD)	**Not Specified**
Ship-To Address	**084- CDOT RM400** **30 N. LA SALLE ST.** **ROOM 400** **Chicago, IL 60602** **United States**		

2.2.21 Line 21 AGGREGATE (EROSION CONTROL)

Category	**91313..**	Start Price (USD)	**Not Specified**
Need-By Date	**Not Specified**	Target Price (USD)	**Not Specified**
Ship-To Address	**084- CDOT RM400** **30 N. LA SALLE ST.** **ROOM 400** **Chicago, IL 60602** **United States**		

2.2.22 Line 22 TEMPORARY EROSION CONTROL BLANKET

Category	**91313..**	Start Price (USD)	**Not Specified**
Need-By Date	**Not Specified**	Target Price (USD)	**Not Specified**
Ship-To Address	**084- CDOT RM400** **30 N. LA SALLE ST.** **ROOM 400** **Chicago, IL 60602** **United States**		

2.2.23 Line 23 STONE RIPRAP, CLASS A5

Category	**91313..**	Start Price (USD)	**Not Specified**
Need-By Date	**Not Specified**	Target Price (USD)	**Not Specified**
Ship-To Address	**084- CDOT RM400** **30 N. LA SALLE ST.** **ROOM 400** **Chicago, IL 60602** **United States**		

2.2.24 Line 24 FILTER FABRIC

Category	**91313..**	Start Price (USD)	**Not Specified**
Need-By Date	**Not Specified**	Target Price (USD)	**Not Specified**
Ship-To Address	**084- CDOT RM400** **30 N. LA SALLE ST.** **ROOM 400** **Chicago, IL 60602** **United States**		

2.2.25 Line 25 ARTICULATED BLOCK REVETMENT MAT

Category	**91313..**	Start Price (USD)	**Not Specified**
Need-By Date	**Not Specified**	Target Price (USD)	**Not Specified**
Ship-To Address	**084- CDOT RM400** **30 N. LA SALLE ST.** **ROOM 400** **Chicago, IL 60602** **United States**		

2.2.26 Line 26 AGGREGATE SUBGRADE IMPROVEMENT 12"

Category	**91313..**	Start Price (USD)	**Not Specified**
Need-By Date	**Not Specified**	Target Price (USD)	**Not Specified**
Ship-To Address	**084- CDOT RM400** **30 N. LA SALLE ST.** **ROOM 400** **Chicago, IL 60602** **United States**		

2.2.27 Line 27 STRUCTURAL SOIL

Category	**91313..**	Start Price (USD)	**Not Specified**
Need-By Date	**Not Specified**	Target Price (USD)	**Not Specified**
Ship-To Address	**084- CDOT RM400** **30 N. LA SALLE ST.** **ROOM 400** **Chicago, IL 60602** **United States**		

2.2.28 Line 28 SAND CUSHION, VARIABLE DEPTH

Category	**91313..**	Start Price (USD)	**Not Specified**
Need-By Date	**Not Specified**	Target Price (USD)	**Not Specified**
Ship-To Address	**084- CDOT RM400** **30 N. LA SALLE ST.** **ROOM 400** **Chicago, IL 60602** **United States**		

2.2.29 Line 29 AGGREGATE BASE COURSE, TYPE B 6"

Category	**91313..**	Start Price (USD)	**Not Specified**
Need-By Date	**Not Specified**	Target Price (USD)	**Not Specified**
Ship-To Address	**084- CDOT RM400** **30 N. LA SALLE ST.** **ROOM 400** **Chicago, IL 60602** **United States**		

2.2.30 Line 30 TEMPORARY PAVEMENT

Category	**91313..**	Start Price (USD)	**Not Specified**
Need-By Date	**Not Specified**	Target Price (USD)	**Not Specified**
Ship-To Address	**084- CDOT RM400** **30 N. LA SALLE ST.** **ROOM 400** **Chicago, IL 60602** **United States**		

2.2.31 Line 31 PORTLAND CEMENT CONCRETE BASE COURSE 11"

Category	**91313..**	Start Price (USD)	**Not Specified**
Need-By Date	**Not Specified**	Target Price (USD)	**Not Specified**
Ship-To Address	**084- CDOT RM400** **30 N. LA SALLE ST.** **ROOM 400** **Chicago, IL 60602** **United States**		

2.2.32 Line 32 BITUMINOUS MATERIALS (TACK COAT)

Category	**91313..**	Start Price (USD)	**Not Specified**
Need-By Date	**Not Specified**	Target Price (USD)	**Not Specified**
Ship-To Address	**084- CDOT RM400** **30 N. LA SALLE ST.** **ROOM 400** **Chicago, IL 60602** **United States**		

2.2.33 Line 33 LEVELING BINDER (HAND METHOD), N70

Category	**91313..**	Start Price (USD)	**Not Specified**
Need-By Date	**Not Specified**	Target Price (USD)	**Not Specified**
Ship-To Address	**084- CDOT RM400** **30 N. LA SALLE ST.** **ROOM 400** **Chicago, IL 60602** **United States**		

2.2.34 Line 34 POLYMERIZED LEVELING BINDER (MACHINE METHOD), IL-4.75, N50

Category	**91313..**	Start Price (USD)	**Not Specified**
Need-By Date	**Not Specified**	Target Price (USD)	**Not Specified**
Ship-To Address	**084- CDOT RM400** **30 N. LA SALLE ST.** **ROOM 400** **Chicago, IL 60602** **United States**		

2.2.35 Line 35 HOT-MIX ASPHALT SURFACE REMOVAL - BUTT JOINT

Category	**91313..**	Start Price (USD)	**Not Specified**
Need-By Date	**Not Specified**	Target Price (USD)	**Not Specified**
Ship-To Address	**084- CDOT RM400** **30 N. LA SALLE ST.** **ROOM 400** **Chicago, IL 60602** **United States**		

2.2.36 Line 36 TEMPORARY RAMP

Category	**91313..**	Start Price (USD)	**Not Specified**
Need-By Date	**Not Specified**	Target Price (USD)	**Not Specified**
Ship-To Address	**084- CDOT RM400** **30 N. LA SALLE ST.** **ROOM 400** **Chicago, IL 60602** **United States**		

2.2.37 Line 37 POLYMERIZED HOT-MIX ASPHALT SURFACE COURSE, STONE MATRIX ASPHALT, N80

Category	**91313..**	Start Price (USD)	**Not Specified**
Need-By Date	**Not Specified**	Target Price (USD)	**Not Specified**
Ship-To Address	**084- CDOT RM400** **30 N. LA SALLE ST.** **ROOM 400** **Chicago, IL 60602** **United States**		

2.2.38 Line 38 HOT-MIX ASPHALT SURFACE COURSE, IL-9.5L, MIX "C", N30 (CDOT)

Category	**91313..**	Start Price (USD)	**Not Specified**
Need-By Date	**Not Specified**	Target Price (USD)	**Not Specified**
Ship-To Address	**084- CDOT RM400** **30 N. LA SALLE ST.** **ROOM 400** **Chicago, IL 60602** **United States**		

2.2.39 Line 39 PAVEMENT CONNECTOR (PCC) FOR BRIDGE APPROACH SLAB

Category	**91313..**	Start Price (USD)	**Not Specified**
Need-By Date	**Not Specified**	Target Price (USD)	**Not Specified**
Ship-To Address	**084- CDOT RM400** **30 N. LA SALLE ST.** **ROOM 400** **Chicago, IL 60602** **United States**		

2.2.40 Line 40 PORTLAND CEMENT CONCRETE SIDEWALK, 5"

Category	**91313..**	Start Price (USD)	**Not Specified**
Need-By Date	**Not Specified**	Target Price (USD)	**Not Specified**
Ship-To Address	**084- CDOT RM400** **30 N. LA SALLE ST.** **ROOM 400** **Chicago, IL 60602** **United States**		

2.2.41 Line 41 PORTLAND CEMENT CONCRETE ADA RAMP 8 INCH

Category	**91313..**	Start Price (USD)	**Not Specified**
Need-By Date	**Not Specified**	Target Price (USD)	**Not Specified**
Ship-To Address	**084- CDOT RM400** **30 N. LA SALLE ST.** **ROOM 400** **Chicago, IL 60602** **United States**		

2.2.42 Line 42 PAVEMENT REMOVAL

Category	**91313..**	Start Price (USD)	**Not Specified**
Need-By Date	**Not Specified**	Target Price (USD)	**Not Specified**
Ship-To Address	**084- CDOT RM400** **30 N. LA SALLE ST.** **ROOM 400** **Chicago, IL 60602** **United States**		

2.2.43 Line 43 CURB REMOVAL

Category	**91313..**	Start Price (USD)	**Not Specified**
Need-By Date	**Not Specified**	Target Price (USD)	**Not Specified**
Ship-To Address	**084- CDOT RM400** **30 N. LA SALLE ST.** **ROOM 400** **Chicago, IL 60602** **United States**		

2.2.44 Line 44 COMBINATION CURB AND GUTTER REMOVAL

Category	**91313..**	Start Price (USD)	**Not Specified**
Need-By Date	**Not Specified**	Target Price (USD)	**Not Specified**
Ship-To Address	**084- CDOT RM400** **30 N. LA SALLE ST.** **ROOM 400** **Chicago, IL 60602** **United States**		

2.2.45 Line 45 SIDEWALK REMOVAL

Category	**91313..**	Start Price (USD)	**Not Specified**
Need-By Date	**Not Specified**	Target Price (USD)	**Not Specified**
Ship-To Address	**084- CDOT RM400** **30 N. LA SALLE ST.** **ROOM 400** **Chicago, IL 60602** **United States**		

2.2.46 Line 46 MEDIAN REMOVAL

Category	**91313..**	Start Price (USD)	**Not Specified**
Need-By Date	**Not Specified**	Target Price (USD)	**Not Specified**
Ship-To Address	**084- CDOT RM400** **30 N. LA SALLE ST.** **ROOM 400** **Chicago, IL 60602** **United States**		

2.2.47 Line 47 HOT-MIX ASPHALT SURFACE REMOVAL, VARIABLE DEPTH

Category	**91313..**	Start Price (USD)	**Not Specified**
Need-By Date	**Not Specified**	Target Price (USD)	**Not Specified**
Ship-To Address	**084- CDOT RM400** **30 N. LA SALLE ST.** **ROOM 400** **Chicago, IL 60602** **United States**		

2.2.48 Line 48 DOWEL BARS 1 1/4"

Category	**91313..**	Start Price (USD)	**Not Specified**
Need-By Date	**Not Specified**	Target Price (USD)	**Not Specified**
Ship-To Address	**084- CDOT RM400** **30 N. LA SALLE ST.** **ROOM 400** **Chicago, IL 60602** **United States**		

2.2.49 Line 49 SAW CUTS

Category	**91313..**	Start Price (USD)	**Not Specified**
Need-By Date	**Not Specified**	Target Price (USD)	**Not Specified**
Ship-To Address	**084- CDOT RM400** **30 N. LA SALLE ST.** **ROOM 400** **Chicago, IL 60602** **United States**		

2.2.50 Line 50 TIE BARS 1 1/4"

Category	**91313..**	Start Price (USD)	**Not Specified**
Need-By Date	**Not Specified**	Target Price (USD)	**Not Specified**
Ship-To Address	**084- CDOT RM400** **30 N. LA SALLE ST.** **ROOM 400** **Chicago, IL 60602** **United States**		

2.2.51 Line 51 REMOVAL OF EXISTING STRUCTURES

Category	**91313..**	Start Price (USD)	**Not Specified**
Need-By Date	**Not Specified**	Target Price (USD)	**Not Specified**
Ship-To Address	**084- CDOT RM400** **30 N. LA SALLE ST.** **ROOM 400** **Chicago, IL 60602** **United States**		

2.2.52 Line 52 CONCRETE REMOVAL

Category	**91313..**	Start Price (USD)	**Not Specified**
Need-By Date	**Not Specified**	Target Price (USD)	**Not Specified**
Ship-To Address	**084- CDOT RM400** **30 N. LA SALLE ST.** **ROOM 400** **Chicago, IL 60602** **United States**		

2.2.53 Line 53 PROTECTIVE SHIELD

Category	**91313..**	Start Price (USD)	**Not Specified**
Need-By Date	**Not Specified**	Target Price (USD)	**Not Specified**
Ship-To Address	**084- CDOT RM400** **30 N. LA SALLE ST.** **ROOM 400** **Chicago, IL 60602** **United States**		

2.2.54 Line 54 STRUCTURE EXCAVATION

Category	**91313..**	Start Price (USD)	**Not Specified**
Need-By Date	**Not Specified**	Target Price (USD)	**Not Specified**
Ship-To Address	**084- CDOT RM400** **30 N. LA SALLE ST.** **ROOM 400** **Chicago, IL 60602** **United States**		

2.2.55 Line 55 COFFERDAM EXCAVATION

Category	**91313..**	Start Price (USD)	**Not Specified**
Need-By Date	**Not Specified**	Target Price (USD)	**Not Specified**
Ship-To Address	**084- CDOT RM400** **30 N. LA SALLE ST.** **ROOM 400** **Chicago, IL 60602** **United States**		

2.2.56 Line 56 COFFERDAM (TYPE 1) (LOCATION - 1)

Category	**91313..**	Start Price (USD)	**Not Specified**
Need-By Date	**Not Specified**	Target Price (USD)	**Not Specified**
Ship-To Address	**084- CDOT RM400** **30 N. LA SALLE ST.** **ROOM 400** **Chicago, IL 60602** **United States**		

2.2.57 Line 57 COFFERDAM (TYPE 1) (LOCATION - 2)

Category	**91313..**	Start Price (USD)	**Not Specified**
Need-By Date	**Not Specified**	Target Price (USD)	**Not Specified**
Ship-To Address	**084- CDOT RM400** **30 N. LA SALLE ST.** **ROOM 400** **Chicago, IL 60602** **United States**		

2.2.58 Line 58 BRIDGE DECK GROOVING

Category	**91313..**	Start Price (USD)	**Not Specified**
Need-By Date	**Not Specified**	Target Price (USD)	**Not Specified**
Ship-To Address	**084- CDOT RM400** **30 N. LA SALLE ST.** **ROOM 400** **Chicago, IL 60602** **United States**		

2.2.59 Line 59 FORM LINER TEXTURED SURFACE

Category	**91313..**	Start Price (USD)	**Not Specified**
Need-By Date	**Not Specified**	Target Price (USD)	**Not Specified**
Ship-To Address	**084- CDOT RM400** **30 N. LA SALLE ST.** **ROOM 400** **Chicago, IL 60602** **United States**		

2.2.60 Line 60 DRAINAGE SCUPPERS, DS-12

Category	**91313..**	Start Price (USD)	**Not Specified**
Need-By Date	**Not Specified**	Target Price (USD)	**Not Specified**
Ship-To Address	**084- CDOT RM400** **30 N. LA SALLE ST.** **ROOM 400** **Chicago, IL 60602** **United States**		

2.2.61 Line 61 HIGH PERFORMANCE CONCRETE STRUCTURES

Category	**91313..**	Start Price (USD)	**Not Specified**
Need-By Date	**Not Specified**	Target Price (USD)	**Not Specified**
Ship-To Address	**084- CDOT RM400** **30 N. LA SALLE ST.** **ROOM 400** **Chicago, IL 60602** **United States**		

2.2.62 Line 62 HIGH PERFORMANCE CONCRETE SUPERSTRUCTURES

Category	**91313..**	Start Price (USD)	**Not Specified**
Need-By Date	**Not Specified**	Target Price (USD)	**Not Specified**
Ship-To Address	**084- CDOT RM400** **30 N. LA SALLE ST.** **ROOM 400** **Chicago, IL 60602** **United States**		

2.2.63 Line 63 LATEX CONCRETE OVERLAY FOR NEW BRIDGE DECK, 2-1/4 INCH

Category	**91313..**	Start Price (USD)	**Not Specified**
Need-By Date	**Not Specified**	Target Price (USD)	**Not Specified**
Ship-To Address	**084- CDOT RM400** **30 N. LA SALLE ST.** **ROOM 400** **Chicago, IL 60602** **United States**		

2.2.64 Line 64 STUD SHEAR CONNECTORS

Category	**91313..**	Start Price (USD)	**Not Specified**
Need-By Date	**Not Specified**	Target Price (USD)	**Not Specified**
Ship-To Address	**084- CDOT RM400** **30 N. LA SALLE ST.** **ROOM 400** **Chicago, IL 60602** **United States**		

2.2.65 Line 65 FURNISHING AND ERECTING STRUCTURAL STEEL

Category	**91313..**	Start Price (USD)	**Not Specified**
Need-By Date	**Not Specified**	Target Price (USD)	**Not Specified**
Ship-To Address	**084- CDOT RM400** **30 N. LA SALLE ST.** **ROOM 400** **Chicago, IL 60602** **United States**		

2.2.66 Line 66 REINFORCEMENT BARS, EPOXY COATED

Category	**91313..**	Start Price (USD)	**Not Specified**
Need-By Date	**Not Specified**	Target Price (USD)	**Not Specified**
Ship-To Address	**084- CDOT RM400** **30 N. LA SALLE ST.** **ROOM 400** **Chicago, IL 60602** **United States**		

2.2.67 Line 67 BAR SPLICERS

Category	**91313..**	Start Price (USD)	**Not Specified**
Need-By Date	**Not Specified**	Target Price (USD)	**Not Specified**
Ship-To Address	**084- CDOT RM400** **30 N. LA SALLE ST.** **ROOM 400** **Chicago, IL 60602** **United States**		

2.2.68 Line 68 NAME PLATES

Category	**91313..**	Start Price (USD)	**Not Specified**
Need-By Date	**Not Specified**	Target Price (USD)	**Not Specified**
Ship-To Address	**084- CDOT RM400** **30 N. LA SALLE ST.** **ROOM 400** **Chicago, IL 60602** **United States**		

2.2.69 Line 69 PREFORMED JOINT STRIP SEAL

Category	**91313..**	Start Price (USD)	**Not Specified**
Need-By Date	**Not Specified**	Target Price (USD)	**Not Specified**
Ship-To Address	**084- CDOT RM400** **30 N. LA SALLE ST.** **ROOM 400** **Chicago, IL 60602** **United States**		

2.2.70 Line 70 ELASTOMERIC BEARING ASSEMBLY, TYPE II

Category	**91313..**	Start Price (USD)	**Not Specified**
Need-By Date	**Not Specified**	Target Price (USD)	**Not Specified**
Ship-To Address	**084- CDOT RM400** **30 N. LA SALLE ST.** **ROOM 400** **Chicago, IL 60602** **United States**		

2.2.71 Line 71 ANCHOR BOLTS, 5/8"

Category	**91313..**	Start Price (USD)	**Not Specified**
Need-By Date	**Not Specified**	Target Price (USD)	**Not Specified**
Ship-To Address	**084- CDOT RM400** **30 N. LA SALLE ST.** **ROOM 400** **Chicago, IL 60602** **United States**		

2.2.72 Line 72 ANCHOR BOLTS, 1 1/4"

Category	**91313..**	Start Price (USD)	**Not Specified**
Need-By Date	**Not Specified**	Target Price (USD)	**Not Specified**
Ship-To Address	**084- CDOT RM400** **30 N. LA SALLE ST.** **ROOM 400** **Chicago, IL 60602** **United States**		

2.2.73 Line 73 PERMANENT SHEET PILING

Category	**91313..**	Start Price (USD)	**Not Specified**
Need-By Date	**Not Specified**	Target Price (USD)	**Not Specified**
Ship-To Address	**084- CDOT RM400** **30 N. LA SALLE ST.** **ROOM 400** **Chicago, IL 60602** **United States**		

2.2.74 Line 74 FURNISHING SOLDIER PILES (HP SECTION)

Category	**91313..**	Start Price (USD)	**Not Specified**
Need-By Date	**Not Specified**	Target Price (USD)	**Not Specified**
Ship-To Address	**084- CDOT RM400** **30 N. LA SALLE ST.** **ROOM 400** **Chicago, IL 60602** **United States**		

2.2.75 Line 75 DRIVING SOLDIER PILES

Category	**91313..**	Start Price (USD)	**Not Specified**
Need-By Date	**Not Specified**	Target Price (USD)	**Not Specified**
Ship-To Address	**084- CDOT RM400** **30 N. LA SALLE ST.** **ROOM 400** **Chicago, IL 60602** **United States**		

2.2.76 Line 76 UNTREATED TIMBER LAGGING

Category	**91313..**	Start Price (USD)	**Not Specified**
Need-By Date	**Not Specified**	Target Price (USD)	**Not Specified**
Ship-To Address	**084- CDOT RM400** **30 N. LA SALLE ST.** **ROOM 400** **Chicago, IL 60602** **United States**		

2.2.77 Line 77 SEGMENTAL CONCRETE BLOCK WALL

Category	**91313..**	Start Price (USD)	**Not Specified**
Need-By Date	**Not Specified**	Target Price (USD)	**Not Specified**
Ship-To Address	**084- CDOT RM400** **30 N. LA SALLE ST.** **ROOM 400** **Chicago, IL 60602** **United States**		

2.2.78 Line 78 CONCRETE STRUCTURES (RETAINING WALL)

Category	**91313..**	Start Price (USD)	**Not Specified**
Need-By Date	**Not Specified**	Target Price (USD)	**Not Specified**
Ship-To Address	**084- CDOT RM400** **30 N. LA SALLE ST.** **ROOM 400** **Chicago, IL 60602** **United States**		

2.2.79 Line 79 PRECAST REINFORCED CONCRETE FLARED END SECTIONS 12"

Category	**91313..**	Start Price (USD)	**Not Specified**
Need-By Date	**Not Specified**	Target Price (USD)	**Not Specified**
Ship-To Address	**084- CDOT RM400** **30 N. LA SALLE ST.** **ROOM 400** **Chicago, IL 60602** **United States**		

2.2.80 Line 80 CAST-IN-PLACE REINFORCED CONCRETE END SECTIONS 72"

Category	**91313..**	Start Price (USD)	**Not Specified**
Need-By Date	**Not Specified**	Target Price (USD)	**Not Specified**
Ship-To Address	**084- CDOT RM400** **30 N. LA SALLE ST.** **ROOM 400** **Chicago, IL 60602** **United States**		

2.2.81 Line 81 CONCRETE COLLAR

Category	**91313..**	Start Price (USD)	**Not Specified**
Need-By Date	**Not Specified**	Target Price (USD)	**Not Specified**
Ship-To Address	**084- CDOT RM400** **30 N. LA SALLE ST.** **ROOM 400** **Chicago, IL 60602** **United States**		

2.2.82 Line 82 STORM SEWERS, CLASS A, TYPE 1 12"

Category	**91313..**	Start Price (USD)	**Not Specified**
Need-By Date	**Not Specified**	Target Price (USD)	**Not Specified**
Ship-To Address	**084- CDOT RM400** **30 N. LA SALLE ST.** **ROOM 400** **Chicago, IL 60602** **United States**		

2.2.83 Line 83 DUCTILE IRON WATER MAIN 12"

Category	**91313..**	Start Price (USD)	**Not Specified**
Need-By Date	**Not Specified**	Target Price (USD)	**Not Specified**
Ship-To Address	**084- CDOT RM400** **30 N. LA SALLE ST.** **ROOM 400** **Chicago, IL 60602** **United States**		

2.2.84 Line 84 FIRE HYDRANTS TO BE REMOVED

Category	**91313..**	Start Price (USD)	**Not Specified**
Need-By Date	**Not Specified**	Target Price (USD)	**Not Specified**
Ship-To Address	**084- CDOT RM400** **30 N. LA SALLE ST.** **ROOM 400** **Chicago, IL 60602** **United States**		

2.2.85 Line 85 FIRE HYDRANTS

Category	**91313..**	Start Price (USD)	**Not Specified**
Need-By Date	**Not Specified**	Target Price (USD)	**Not Specified**
Ship-To Address	**084- CDOT RM400** **30 N. LA SALLE ST.** **ROOM 400** **Chicago, IL 60602** **United States**		

2.2.86 Line 86 CONCRETE SEALER

Category	**91313..**	Start Price (USD)	**Not Specified**
Need-By Date	**Not Specified**	Target Price (USD)	**Not Specified**
Ship-To Address	**084- CDOT RM400** **30 N. LA SALLE ST.** **ROOM 400** **Chicago, IL 60602** **United States**		

2.2.87 Line 87 PROTECTIVE CONCRETE SEALER

Category	**91313..**	Start Price (USD)	**Not Specified**
Need-By Date	**Not Specified**	Target Price (USD)	**Not Specified**
Ship-To Address	**084- CDOT RM400** **30 N. LA SALLE ST.** **ROOM 400** **Chicago, IL 60602** **United States**		

2.2.88 Line 88 GEOCOMPOSITE WALL DRAIN

Category	**91313..**	Start Price (USD)	**Not Specified**
Need-By Date	**Not Specified**	Target Price (USD)	**Not Specified**
Ship-To Address	**084- CDOT RM400** **30 N. LA SALLE ST.** **ROOM 400** **Chicago, IL 60602** **United States**		

2.2.89 Line 89 CONTROLLED LOW-STRENGTH MATERIAL

Category	**91313..**	Start Price (USD)	**Not Specified**
Need-By Date	**Not Specified**	Target Price (USD)	**Not Specified**
Ship-To Address	**084- CDOT RM400** **30 N. LA SALLE ST.** **ROOM 400** **Chicago, IL 60602** **United States**		

2.2.90 Line 90 CATCH BASINS, TYPE A, 4'-DIAMETER, TYPE 9 FRAME AND GRATE

Category	**91313..**	Start Price (USD)	**Not Specified**
Need-By Date	**Not Specified**	Target Price (USD)	**Not Specified**
Ship-To Address	**084- CDOT RM400** **30 N. LA SALLE ST.** **ROOM 400** **Chicago, IL 60602** **United States**		

2.2.91 Line 91 CATCH BASINS, TYPE A, 4'-DIAMETER, TYPE 10 FRAME AND GRATE

Category	**91313..**	Start Price (USD)	**Not Specified**
Need-By Date	**Not Specified**	Target Price (USD)	**Not Specified**
Ship-To Address	**084- CDOT RM400** **30 N. LA SALLE ST.** **ROOM 400** **Chicago, IL 60602** **United States**		

2.2.92 Line 92 MANHOLE TYPE A, 4' DIAMETER, TYPE 1 FRAME, CLOSED LID

Category	**91313..**	Start Price (USD)	**Not Specified**
Need-By Date	**Not Specified**	Target Price (USD)	**Not Specified**
Ship-To Address	**084- CDOT RM400** **30 N. LA SALLE ST.** **ROOM 400** **Chicago, IL 60602** **United States**		

2.2.93 Line 93 INLETS, TYPE A, TYPE 10 FRAME AND GRATE

Category	**91313..**	Start Price (USD)	**Not Specified**
Need-By Date	**Not Specified**	Target Price (USD)	**Not Specified**
Ship-To Address	**084- CDOT RM400** **30 N. LA SALLE ST.** **ROOM 400** **Chicago, IL 60602** **United States**		

2.2.94 Line 94 CATCHBASINS TO BE ADJUSTED

Category	**91313..**	Start Price (USD)	**Not Specified**
Need-By Date	**Not Specified**	Target Price (USD)	**Not Specified**
Ship-To Address	**084- CDOT RM400** **30 N. LA SALLE ST.** **ROOM 400** **Chicago, IL 60602** **United States**		

2.2.95 Line 95 MANHOLES TO BE ADJUSTED

Category	**91313..**	Start Price (USD)	**Not Specified**
Need-By Date	**Not Specified**	Target Price (USD)	**Not Specified**
Ship-To Address	**084- CDOT RM400** **30 N. LA SALLE ST.** **ROOM 400** **Chicago, IL 60602** **United States**		

2.2.96 Line 96 VALVE VAULTS TO BE ADJUSTED

Category	**91313..**	Start Price (USD)	**Not Specified**
Need-By Date	**Not Specified**	Target Price (USD)	**Not Specified**
Ship-To Address	**084- CDOT RM400** **30 N. LA SALLE ST.** **ROOM 400** **Chicago, IL 60602** **United States**		

2.2.97 Line 97 CONCRETE CURB, TYPE B

Category	**91313..**	Start Price (USD)	**Not Specified**
Need-By Date	**Not Specified**	Target Price (USD)	**Not Specified**
Ship-To Address	**084- CDOT RM400** **30 N. LA SALLE ST.** **ROOM 400** **Chicago, IL 60602** **United States**		

2.2.98 Line 98 CONCRETE GUTTER, TYPE B

Category	**91313..**	Start Price (USD)	**Not Specified**
Need-By Date	**Not Specified**	Target Price (USD)	**Not Specified**
Ship-To Address	**084- CDOT RM400** **30 N. LA SALLE ST.** **ROOM 400** **Chicago, IL 60602** **United States**		

2.2.99 Line 99 COMBINATION CONCRETE CURB AND GUTTER, TYPE B-V.12

Category	**91313..**	Start Price (USD)	**Not Specified**
Need-By Date	**Not Specified**	Target Price (USD)	**Not Specified**
Ship-To Address	**084- CDOT RM400** **30 N. LA SALLE ST.** **ROOM 400** **Chicago, IL 60602** **United States**		

2.2.100 Line 100 TEMPORARY CHAIN LINK FENCE WITH SCREENING, 6'

Category	**91313..**	Start Price (USD)	**Not Specified**
Need-By Date	**Not Specified**	Target Price (USD)	**Not Specified**
Ship-To Address	**084- CDOT RM400** **30 N. LA SALLE ST.** **ROOM 400** **Chicago, IL 60602** **United States**		

2.2.101 Line 101 RELOCATE TEMPORARY CHAIN LINK FENCE WITH SCREENING

Category	**91313..**	Start Price (USD)	**Not Specified**
Need-By Date	**Not Specified**	Target Price (USD)	**Not Specified**
Ship-To Address	**084- CDOT RM400** **30 N. LA SALLE ST.** **ROOM 400** **Chicago, IL 60602** **United States**		

2.2.102 Line 102 ENGINEER'S FIELD OFFICE

Category	**91313..**	Start Price (USD)	**Not Specified**
Need-By Date	**Not Specified**	Target Price (USD)	**Not Specified**
Ship-To Address	**084- CDOT RM400** **30 N. LA SALLE ST.** **ROOM 400** **Chicago, IL 60602** **United States**		

2.2.103 Line 103 MOBILIZATION

Category	**91313..**	Start Price (USD)	**Not Specified**
Need-By Date	**Not Specified**	Target Price (USD)	**Not Specified**
Ship-To Address	**084- CDOT RM400** **30 N. LA SALLE ST.** **ROOM 400** **Chicago, IL 60602** **United States**		

2.2.104 Line 104 NON SPECIAL WASTE DISPOSAL

Category	**91313..**	Start Price (USD)	**Not Specified**
Need-By Date	**Not Specified**	Target Price (USD)	**Not Specified**
Ship-To Address	**084- CDOT RM400** **30 N. LA SALLE ST.** **ROOM 400** **Chicago, IL 60602** **United States**		

2.2.105 Line 105 SPECIAL WASTE DISPOSAL

Category	**91313..**	Start Price (USD)	**Not Specified**
Need-By Date	**Not Specified**	Target Price (USD)	**Not Specified**
Ship-To Address	**084- CDOT RM400** **30 N. LA SALLE ST.** **ROOM 400** **Chicago, IL 60602** **United States**		

2.2.106 Line 106 SPECIAL WASTE PLANS AND REPORTS

Category	**91313..**	Start Price (USD)	**Not Specified**
Need-By Date	**Not Specified**	Target Price (USD)	**Not Specified**
Ship-To Address	**084- CDOT RM400** **30 N. LA SALLE ST.** **ROOM 400** **Chicago, IL 60602** **United States**		

2.2.107 Line 107 SOIL DISPOSAL ANALYSIS

Category	**91313..**	Start Price (USD)	**Not Specified**
Need-By Date	**Not Specified**	Target Price (USD)	**Not Specified**
Ship-To Address	**084- CDOT RM400** **30 N. LA SALLE ST.** **ROOM 400** **Chicago, IL 60602** **United States**		

2.2.108 Line 108 TCL SOIL ANALYSIS

Category	**91313..**	Start Price (USD)	**Not Specified**
Need-By Date	**Not Specified**	Target Price (USD)	**Not Specified**
Ship-To Address	**084- CDOT RM400** **30 N. LA SALLE ST.** **ROOM 400** **Chicago, IL 60602** **United States**		

2.2.109 Line 109 CHANGEABLE MESSAGE SIGN

Category	**91313..**	Start Price (USD)	**Not Specified**
Need-By Date	**Not Specified**	Target Price (USD)	**Not Specified**
Ship-To Address	**084- CDOT RM400** **30 N. LA SALLE ST.** **ROOM 400** **Chicago, IL 60602** **United States**		

2.2.110 Line 110 SHORT TERM PAVEMENT MARKING

Category	**91313..**	Start Price (USD)	**Not Specified**
Need-By Date	**Not Specified**	Target Price (USD)	**Not Specified**
Ship-To Address	**084- CDOT RM400** **30 N. LA SALLE ST.** **ROOM 400** **Chicago, IL 60602** **United States**		

2.2.111 Line 111 SHORT TERM PAVEMENT MARKING REMOVAL

Category	**91313..**	Start Price (USD)	**Not Specified**
Need-By Date	**Not Specified**	Target Price (USD)	**Not Specified**
Ship-To Address	**084- CDOT RM400** **30 N. LA SALLE ST.** **ROOM 400** **Chicago, IL 60602** **United States**		

2.2.112 Line 112 TEMPORARY PAVEMENT MARKING - LINE 4"

Category	**91313..**	Start Price (USD)	**Not Specified**
Need-By Date	**Not Specified**	Target Price (USD)	**Not Specified**
Ship-To Address	**084- CDOT RM400** **30 N. LA SALLE ST.** **ROOM 400** **Chicago, IL 60602** **United States**		

2.2.113 Line 113 TEMPORARY PAVEMENT MARKING - LINE 12"

Category	**91313..**	Start Price (USD)	**Not Specified**
Need-By Date	**Not Specified**	Target Price (USD)	**Not Specified**
Ship-To Address	**084- CDOT RM400** **30 N. LA SALLE ST.** **ROOM 400** **Chicago, IL 60602** **United States**		

2.2.114 Line 114 TEMPORARY CONCRETE BARRIER

Category	**91313..**	Start Price (USD)	**Not Specified**
Need-By Date	**Not Specified**	Target Price (USD)	**Not Specified**
Ship-To Address	**084- CDOT RM400** **30 N. LA SALLE ST.** **ROOM 400** **Chicago, IL 60602** **United States**		

2.2.115 Line 115 RELOCATE TEMPORARY CONCRETE BARRIER

Category	**91313..**	Start Price (USD)	**Not Specified**
Need-By Date	**Not Specified**	Target Price (USD)	**Not Specified**
Ship-To Address	**084- CDOT RM400** **30 N. LA SALLE ST.** **ROOM 400** **Chicago, IL 60602** **United States**		

2.2.116 Line 116 IMPACT ATTENUATORS, TEMPORARY (FULLY REDIRECTIVE, NARROW), TEST LEVEL 2

Category	**91313..**	Start Price (USD)	**Not Specified**
Need-By Date	**Not Specified**	Target Price (USD)	**Not Specified**
Ship-To Address	**084- CDOT RM400** **30 N. LA SALLE ST.** **ROOM 400** **Chicago, IL 60602** **United States**		

2.2.117 Line 117 IMPACT ATTENUATORS, RELOCATE (FULLY REDIRECTIVE, NARROW), TEST LEVEL 2

Category	**91313..**	Start Price (USD)	**Not Specified**
Need-By Date	**Not Specified**	Target Price (USD)	**Not Specified**
Ship-To Address	**084- CDOT RM400** **30 N. LA SALLE ST.** **ROOM 400** **Chicago, IL 60602** **United States**		

2.2.118 Line 118 WOOD SIGN SUPPORT

Category **91313..**
Need-By Date **Not Specified**
Ship-To Address **084- CDOT RM400**
30 N. LA SALLE ST.
ROOM 400
Chicago, IL 60602
United States

Start Price (USD) **Not Specified**
Target Price (USD) **Not Specified**

2.2.119 Line 119 THERMOPLASTIC PAVEMENT MARKING - LINE 12"

Category **91313..**
Need-By Date **Not Specified**
Ship-To Address **084- CDOT RM400**
30 N. LA SALLE ST.
ROOM 400
Chicago, IL 60602
United States

Start Price (USD) **Not Specified**
Target Price (USD) **Not Specified**

2.2.120 Line 120 THERMOPLASTIC PAVEMENT MARKING - LINE 4"

Category **91313..**
Need-By Date **Not Specified**
Ship-To Address **084- CDOT RM400**
30 N. LA SALLE ST.
ROOM 400
Chicago, IL 60602
United States

Start Price (USD) **Not Specified**
Target Price (USD) **Not Specified**

2.2.121 Line 121 THERMOPLASTIC PAVEMENT MARKING - LINE 6"

Category **91313..**
Need-By Date **Not Specified**
Ship-To Address **084- CDOT RM400**
30 N. LA SALLE ST.
ROOM 400
Chicago, IL 60602
United States

Start Price (USD) **Not Specified**
Target Price (USD) **Not Specified**

2.2.122 Line 122 THERMOPLASTIC PAVEMENT MARKING - LINE 24"

Category **91313..**
Need-By Date **Not Specified**
Ship-To Address **084- CDOT RM400**
30 N. LA SALLE ST.
ROOM 400
Chicago, IL 60602
United States

Start Price (USD) **Not Specified**
Target Price (USD) **Not Specified**

2.2.123 Line 123 THERMOPLASTIC PAVEMENT MARKING - LETTERS AND square YardMBOLS

Category **91313..**
Need-By Date **Not Specified**
Ship-To Address **084- CDOT RM400**
30 N. LA SALLE ST.
ROOM 400
Chicago, IL 60602
United States

Start Price (USD) **Not Specified**
Target Price (USD) **Not Specified**

2.2.124 Line 124 POLYUREA PAVEMENT MARKING TYPE I - LINE 4"

Category	**91313..**	Start Price (USD)	**Not Specified**
Need-By Date	**Not Specified**	Target Price (USD)	**Not Specified**
Ship-To Address	**084- CDOT RM400** **30 N. LA SALLE ST.** **ROOM 400** **Chicago, IL 60602** **United States**		

2.2.125 Line 125 POLYUREA PAVEMENT MARKING TYPE I - LINE 6"

Category	**91313..**	Start Price (USD)	**Not Specified**
Need-By Date	**Not Specified**	Target Price (USD)	**Not Specified**
Ship-To Address	**084- CDOT RM400** **30 N. LA SALLE ST.** **ROOM 400** **Chicago, IL 60602** **United States**		

2.2.126 Line 126 POLYUREA PAVEMENT MARKING TYPE I - LINE 12"

Category	**91313..**	Start Price (USD)	**Not Specified**
Need-By Date	**Not Specified**	Target Price (USD)	**Not Specified**
Ship-To Address	**084- CDOT RM400** **30 N. LA SALLE ST.** **ROOM 400** **Chicago, IL 60602** **United States**		

2.2.127 Line 127 BARRIER WALL REFLECTOR, TYPE B

Category	**91313..**	Start Price (USD)	**Not Specified**
Need-By Date	**Not Specified**	Target Price (USD)	**Not Specified**
Ship-To Address	**084- CDOT RM400** **30 N. LA SALLE ST.** **ROOM 400** **Chicago, IL 60602** **United States**		

2.2.128 Line 128 PAVEMENT MARKING REMOVAL

Category	**91313..**	Start Price (USD)	**Not Specified**
Need-By Date	**Not Specified**	Target Price (USD)	**Not Specified**
Ship-To Address	**084- CDOT RM400** **30 N. LA SALLE ST.** **ROOM 400** **Chicago, IL 60602** **United States**		

2.2.129 Line 129 UNDERGROUND CONDUIT, PVC, 2" DIA.

Category	**91313..**	Start Price (USD)	**Not Specified**
Need-By Date	**Not Specified**	Target Price (USD)	**Not Specified**
Ship-To Address	**084- CDOT RM400** **30 N. LA SALLE ST.** **ROOM 400** **Chicago, IL 60602** **United States**		

2.2.130 Line 130 CONDUIT ATTACHED TO STRUCTURE, 3/4" DIA., GALVANIZED STEEL

Category	**91313..**	Start Price (USD)	**Not Specified**
Need-By Date	**Not Specified**	Target Price (USD)	**Not Specified**
Ship-To Address	**084- CDOT RM400** **30 N. LA SALLE ST.** **ROOM 400** **Chicago, IL 60602** **United States**		

2.2.131 Line 131 JUNCTION BOX, STAINLESS STEEL, ATTACHED TO STRUCTURE, 6" X 6" X 4"

Category	**91313..**	Start Price (USD)	**Not Specified**
Need-By Date	**Not Specified**	Target Price (USD)	**Not Specified**
Ship-To Address	**084- CDOT RM400** **30 N. LA SALLE ST.** **ROOM 400** **Chicago, IL 60602** **United States**		

2.2.132 Line 132 JUNCTION BOX, STAINLESS STEEL, ATTACHED TO STRUCTURE, 12" X 12" X 6"

Category	**91313..**	Start Price (USD)	**Not Specified**
Need-By Date	**Not Specified**	Target Price (USD)	**Not Specified**
Ship-To Address	**084- CDOT RM400** **30 N. LA SALLE ST.** **ROOM 400** **Chicago, IL 60602** **United States**		

2.2.133 Line 133 PERMANENT GROUND ANCHOR

Category	**91313..**	Start Price (USD)	**Not Specified**
Need-By Date	**Not Specified**	Target Price (USD)	**Not Specified**
Ship-To Address	**084- CDOT RM400** **30 N. LA SALLE ST.** **ROOM 400** **Chicago, IL 60602** **United States**		

2.2.134 Line 134 MICRO-PILES

Category	**91313..**	Start Price (USD)	**Not Specified**
Need-By Date	**Not Specified**	Target Price (USD)	**Not Specified**
Ship-To Address	**084- CDOT RM400** **30 N. LA SALLE ST.** **ROOM 400** **Chicago, IL 60602** **United States**		

2.2.135 Line 135 WOODEN POLE REMOVAL

Category	**91313..**	Start Price (USD)	**Not Specified**
Need-By Date	**Not Specified**	Target Price (USD)	**Not Specified**
Ship-To Address	**084- CDOT RM400** **30 N. LA SALLE ST.** **ROOM 400** **Chicago, IL 60602** **United States**		

2.2.136 Line 136 MICROPILE LOAD TEST

Category	**91313..**	Start Price (USD)	**Not Specified**
Need-By Date	**Not Specified**	Target Price (USD)	**Not Specified**
Ship-To Address	**084- CDOT RM400** **30 N. LA SALLE ST.** **ROOM 400** **Chicago, IL 60602** **United States**		

2.2.137 Line 137 MICROPILE PROOF LOAD TEST

Category	**91313..**	Start Price (USD)	**Not Specified**
Need-By Date	**Not Specified**	Target Price (USD)	**Not Specified**
Ship-To Address	**084- CDOT RM400** **30 N. LA SALLE ST.** **ROOM 400** **Chicago, IL 60602** **United States**		

2.2.138 Line 138 EROSION CONTROL, TEMPORARY PIPE SLOPE DRAIN

Category	**91313..**	Start Price (USD)	**Not Specified**
Need-By Date	**Not Specified**	Target Price (USD)	**Not Specified**
Ship-To Address	**084- CDOT RM400** **30 N. LA SALLE ST.** **ROOM 400** **Chicago, IL 60602** **United States**		

2.2.139 Line 139 REMOVE TEMPORARY PIPE SLOPE DRAIN

Category	**91313..**	Start Price (USD)	**Not Specified**
Need-By Date	**Not Specified**	Target Price (USD)	**Not Specified**
Ship-To Address	**084- CDOT RM400** **30 N. LA SALLE ST.** **ROOM 400** **Chicago, IL 60602** **United States**		

2.2.140 Line 140 TREE GRATE REMOVAL

Category	**91313..**	Start Price (USD)	**Not Specified**
Need-By Date	**Not Specified**	Target Price (USD)	**Not Specified**
Ship-To Address	**084- CDOT RM400** **30 N. LA SALLE ST.** **ROOM 400** **Chicago, IL 60602** **United States**		

2.2.141 Line 141 GRATING FOR CONCRETE HEADWALL NO 1

Category	**91313..**	Start Price (USD)	**Not Specified**
Need-By Date	**Not Specified**	Target Price (USD)	**Not Specified**
Ship-To Address	**084- CDOT RM400** **30 N. LA SALLE ST.** **ROOM 400** **Chicago, IL 60602** **United States**		

2.2.142 Line 142 BRACED EXCAVATION

Category	**91313..**	Start Price (USD)	**Not Specified**
Need-By Date	**Not Specified**	Target Price (USD)	**Not Specified**
Ship-To Address	**084- CDOT RM400** **30 N. LA SALLE ST.** **ROOM 400** **Chicago, IL 60602** **United States**		

2.2.143 Line 143 ORNAMENTAL FENCE

Category	**91313..**	Start Price (USD)	**Not Specified**
Need-By Date	**Not Specified**	Target Price (USD)	**Not Specified**
Ship-To Address	**084- CDOT RM400** **30 N. LA SALLE ST.** **ROOM 400** **Chicago, IL 60602** **United States**		

2.2.144 Line 144 ORNAMENTAL RAILING

Category	**91313..**	Start Price (USD)	**Not Specified**
Need-By Date	**Not Specified**	Target Price (USD)	**Not Specified**
Ship-To Address	**084- CDOT RM400** **30 N. LA SALLE ST.** **ROOM 400** **Chicago, IL 60602** **United States**		

2.2.145 Line 145 GRANULAR BACKFILL FOR STRUCTURES

Category	**91313..**	Start Price (USD)	**Not Specified**
Need-By Date	**Not Specified**	Target Price (USD)	**Not Specified**
Ship-To Address	**084- CDOT RM400** **30 N. LA SALLE ST.** **ROOM 400** **Chicago, IL 60602** **United States**		

2.2.146 Line 146 PAVED DITCH (SPECIAL)

Category	**91313..**	Start Price (USD)	**Not Specified**
Need-By Date	**Not Specified**	Target Price (USD)	**Not Specified**
Ship-To Address	**084- CDOT RM400** **30 N. LA SALLE ST.** **ROOM 400** **Chicago, IL 60602** **United States**		

2.2.147 Line 147 CHAIN LINK FENCE, 5' (SPECIAL)

Category	**91313..**	Start Price (USD)	**Not Specified**
Need-By Date	**Not Specified**	Target Price (USD)	**Not Specified**
Ship-To Address	**084- CDOT RM400** **30 N. LA SALLE ST.** **ROOM 400** **Chicago, IL 60602** **United States**		

2.2.148 Line 148 TRAFFIC CONTROL AND PROTECTION, (SPECIAL)

Category	**91313..**	Start Price (USD)	**Not Specified**
Need-By Date	**Not Specified**	Target Price (USD)	**Not Specified**
Ship-To Address	**084- CDOT RM400** **30 N. LA SALLE ST.** **ROOM 400** **Chicago, IL 60602** **United States**		

2.2.149 Line 149 HANDHOLE (SPECIAL)

Category	**91313..**	Start Price (USD)	**Not Specified**
Need-By Date	**Not Specified**	Target Price (USD)	**Not Specified**
Ship-To Address	**084- CDOT RM400** **30 N. LA SALLE ST.** **ROOM 400** **Chicago, IL 60602** **United States**		

2.2.150 Line 150 STEEL RAILING (SPECIAL)

Category	**91313..**	Start Price (USD)	**Not Specified**
Need-By Date	**Not Specified**	Target Price (USD)	**Not Specified**
Ship-To Address	**084- CDOT RM400** **30 N. LA SALLE ST.** **ROOM 400** **Chicago, IL 60602** **United States**		

2.2.151 Line 151 HANDRAIL REMOVAL

Category	**91313..**	Start Price (USD)	**Not Specified**
Need-By Date	**Not Specified**	Target Price (USD)	**Not Specified**
Ship-To Address	**084- CDOT RM400** **30 N. LA SALLE ST.** **ROOM 400** **Chicago, IL 60602** **United States**		

2.2.152 Line 152 TEMPORARY SIDEWALK

Category	**91313..**	Start Price (USD)	**Not Specified**
Need-By Date	**Not Specified**	Target Price (USD)	**Not Specified**
Ship-To Address	**084- CDOT RM400** **30 N. LA SALLE ST.** **ROOM 400** **Chicago, IL 60602** **United States**		

2.2.153 Line 153 STRUCTURAL REPAIR OF CONCRETE (DEPTH EQUAL TO OR LESS THAN 5 INCHES)

Category	**91313..**	Start Price (USD)	**Not Specified**
Need-By Date	**Not Specified**	Target Price (USD)	**Not Specified**
Ship-To Address	**084- CDOT RM400** **30 N. LA SALLE ST.** **ROOM 400** **Chicago, IL 60602** **United States**		

2.2.154 Line 154 STABILIZED CONSTRUCTION ENTRANCE

Category	**91313..**	Start Price (USD)	**Not Specified**
Need-By Date	**Not Specified**	Target Price (USD)	**Not Specified**
Ship-To Address	**084- CDOT RM400** **30 N. LA SALLE ST.** **ROOM 400** **Chicago, IL 60602** **United States**		

2.2.155 Line 155 CONSTRUCTION LAYOUT

Category	**91313..**	Start Price (USD)	**Not Specified**
Need-By Date	**Not Specified**	Target Price (USD)	**Not Specified**
Ship-To Address	**084- CDOT RM400** **30 N. LA SALLE ST.** **ROOM 400** **Chicago, IL 60602** **United States**		

2.2.156 Line 156 TEMPORARY INFORMATION SIGNING

Category	**91313..**	Start Price (USD)	**Not Specified**
Need-By Date	**Not Specified**	Target Price (USD)	**Not Specified**
Ship-To Address	**084- CDOT RM400** **30 N. LA SALLE ST.** **ROOM 400** **Chicago, IL 60602** **United States**		

2.2.157 Line 157 PIPE UNDERDRAINS FOR STRUCTURES 4"

Category	**91313..**	Start Price (USD)	**Not Specified**
Need-By Date	**Not Specified**	Target Price (USD)	**Not Specified**
Ship-To Address	**084- CDOT RM400** **30 N. LA SALLE ST.** **ROOM 400** **Chicago, IL 60602** **United States**		

2.2.158 Line 158 SUBBASE GRANULAR MATERIAL, NON-LIMESTONE

Category	**91313..**	Start Price (USD)	**Not Specified**
Need-By Date	**Not Specified**	Target Price (USD)	**Not Specified**
Ship-To Address	**084- CDOT RM400** **30 N. LA SALLE ST.** **ROOM 400** **Chicago, IL 60602** **United States**		

2.2.159 Line 159 PERMEABLE PAVERS

Category	**91313..**	Start Price (USD)	**Not Specified**
Need-By Date	**Not Specified**	Target Price (USD)	**Not Specified**
Ship-To Address	**084- CDOT RM400** **30 N. LA SALLE ST.** **ROOM 400** **Chicago, IL 60602** **United States**		

2.2.160 Line 160 PERMEABLE PAVER REMOVAL

Category	**91313..**	Start Price (USD)	**Not Specified**
Need-By Date	**Not Specified**	Target Price (USD)	**Not Specified**
Ship-To Address	**084- CDOT RM400** **30 N. LA SALLE ST.** **ROOM 400** **Chicago, IL 60602** **United States**		

2.2.161 Line 161 GRADING AND SHAPING SHARED USE PATH

Category	**91313..**	Start Price (USD)	**Not Specified**
Need-By Date	**Not Specified**	Target Price (USD)	**Not Specified**
Ship-To Address	**084- CDOT RM400** **30 N. LA SALLE ST.** **ROOM 400** **Chicago, IL 60602** **United States**		

2.2.162 Line 162 MAINTENANCE OF ACCESS TO ABUTTING PROPERTIES

Category	**91313..**	Start Price (USD)	**Not Specified**
Need-By Date	**Not Specified**	Target Price (USD)	**Not Specified**
Ship-To Address	**084- CDOT RM400** **30 N. LA SALLE ST.** **ROOM 400** **Chicago, IL 60602** **United States**		

2.2.163 Line 163 CAST IRON TREE GRATES, GRATE FRAMES, AND THICKENED SLAB, 5' BY 10'

Category	**91313..**	Start Price (USD)	**Not Specified**
Need-By Date	**Not Specified**	Target Price (USD)	**Not Specified**
Ship-To Address	**084- CDOT RM400** **30 N. LA SALLE ST.** **ROOM 400** **Chicago, IL 60602** **United States**		

2.2.164 Line 164 REMOVAL OF EXISTING WOODCHIP TRAIL

Category	**91313..**	Start Price (USD)	**Not Specified**
Need-By Date	**Not Specified**	Target Price (USD)	**Not Specified**
Ship-To Address	**084- CDOT RM400** **30 N. LA SALLE ST.** **ROOM 400** **Chicago, IL 60602** **United States**		

2.2.165 Line 165 MULCH TRAIL

Category	**91313..**	Start Price (USD)	**Not Specified**
Need-By Date	**Not Specified**	Target Price (USD)	**Not Specified**
Ship-To Address	**084- CDOT RM400** **30 N. LA SALLE ST.** **ROOM 400** **Chicago, IL 60602** **United States**		

2.2.166 Line 166 REMOVE EXISTING SIGN PANEL AND SALVAGE

Category	**91313..**	Start Price (USD)	**Not Specified**
Need-By Date	**Not Specified**	Target Price (USD)	**Not Specified**
Ship-To Address	**084- CDOT RM400** **30 N. LA SALLE ST.** **ROOM 400** **Chicago, IL 60602** **United States**		

2.2.167 Line 167 REMOVE EXISTING SIGN PANEL AND POLE ASSEMBLY, FROM SIDEWALK, AND SALVAGE

Category	**91313..**	Start Price (USD)	**Not Specified**
Need-By Date	**Not Specified**	Target Price (USD)	**Not Specified**
Ship-To Address	**084- CDOT RM400** **30 N. LA SALLE ST.** **ROOM 400** **Chicago, IL 60602** **United States**		

2.2.168 Line 168 FURNISH SIGN PANEL, TYPE 1, REFLECTIVE, TYPE A, SINGLE-SIDED

Category	**91313..**	Start Price (USD)	**Not Specified**
Need-By Date	**Not Specified**	Target Price (USD)	**Not Specified**
Ship-To Address	**084- CDOT RM400** **30 N. LA SALLE ST.** **ROOM 400** **Chicago, IL 60602** **United States**		

2.2.169 Line 169 FURNISH SIGN PANEL, TYPE 1, REFLECTIVE, TYPE A, DOUBLE-SIDED

Category	**91313..**	Start Price (USD)	**Not Specified**
Need-By Date	**Not Specified**	Target Price (USD)	**Not Specified**
Ship-To Address	**084- CDOT RM400** **30 N. LA SALLE ST.** **ROOM 400** **Chicago, IL 60602** **United States**		

2.2.170 Line 170 FURNISH AND INSTALL PROJECT SIGN, TYPE A

Category	**91313..**	Start Price (USD)	**Not Specified**
Need-By Date	**Not Specified**	Target Price (USD)	**Not Specified**
Ship-To Address	**084- CDOT RM400** **30 N. LA SALLE ST.** **ROOM 400** **Chicago, IL 60602** **United States**		

2.2.171 Line 171 FURNISH AND INSTALL PROJECT SIGN, TYPE B

Category	**91313..**	Start Price (USD)	**Not Specified**
Need-By Date	**Not Specified**	Target Price (USD)	**Not Specified**
Ship-To Address	**084- CDOT RM400** **30 N. LA SALLE ST.** **ROOM 400** **Chicago, IL 60602** **United States**		

2.2.172 Line 172 FURNISH AND INSTALL PROJECT SIGN, BANNER

Category	**91313..**	Start Price (USD)	**Not Specified**
Need-By Date	**Not Specified**	Target Price (USD)	**Not Specified**
Ship-To Address	**084- CDOT RM400** **30 N. LA SALLE ST.** **ROOM 400** **Chicago, IL 60602** **United States**		

2.2.173 Line 173 FURNISH AND INSTALL POLE, DRILL METHOD

Category	**91313..**	Start Price (USD)	**Not Specified**
Need-By Date	**Not Specified**	Target Price (USD)	**Not Specified**
Ship-To Address	**084- CDOT RM400** **30 N. LA SALLE ST.** **ROOM 400** **Chicago, IL 60602** **United States**		

2.2.174 Line 174 INSTALL SIGN PANEL TY. 1, CENTER MOUNT ON SIGN POLE

Category	**91313..**	Start Price (USD)	**Not Specified**
Need-By Date	**Not Specified**	Target Price (USD)	**Not Specified**
Ship-To Address	**084- CDOT RM400** **30 N. LA SALLE ST.** **ROOM 400** **Chicago, IL 60602** **United States**		

2.2.175 Line 175 INSTALL SIGN PANEL TY. 1, FLAG MOUNT ON SIGN POLE

Category	**91313..**	Start Price (USD)	**Not Specified**
Need-By Date	**Not Specified**	Target Price (USD)	**Not Specified**
Ship-To Address	**084- CDOT RM400** **30 N. LA SALLE ST.** **ROOM 400** **Chicago, IL 60602** **United States**		

2.2.176 Line 176 TRENCH AND BACKFILL WITH SCREENINGS

Category	**91313..**	Start Price (USD)	**Not Specified**
Need-By Date	**Not Specified**	Target Price (USD)	**Not Specified**
Ship-To Address	**084- CDOT RM400** **30 N. LA SALLE ST.** **ROOM 400** **Chicago, IL 60602** **United States**		

2.2.177 Line 177 ELECTRICAL HANDHOLE, 30", 24" FRAME AND LID

Category	**91313..**	Start Price (USD)	**Not Specified**
Need-By Date	**Not Specified**	Target Price (USD)	**Not Specified**
Ship-To Address	**084- CDOT RM400** **30 N. LA SALLE ST.** **ROOM 400** **Chicago, IL 60602** **United States**		

2.2.178 Line 178 DRILL EXISTING MANHOLE OR HANDHOLE

Category	**91313..**	Start Price (USD)	**Not Specified**
Need-By Date	**Not Specified**	Target Price (USD)	**Not Specified**
Ship-To Address	**084- CDOT RM400** **30 N. LA SALLE ST.** **ROOM 400** **Chicago, IL 60602** **United States**		

2.2.179 Line 179 GALVANIZED STEEL CONDUIT ATTACHED TO STRUCTURE 2"

Category	**91313..**	Start Price (USD)	**Not Specified**
Need-By Date	**Not Specified**	Target Price (USD)	**Not Specified**
Ship-To Address	**084- CDOT RM400** **30 N. LA SALLE ST.** **ROOM 400** **Chicago, IL 60602** **United States**		

2.2.180 Line 180 PVC CONDUIT IN TRENCH 2"

Category	**91313..**	Start Price (USD)	**Not Specified**
Need-By Date	**Not Specified**	Target Price (USD)	**Not Specified**
Ship-To Address	**084- CDOT RM400** **30 N. LA SALLE ST.** **ROOM 400** **Chicago, IL 60602** **United States**		

2.2.181 Line 181 GALVANIZED STEEL CONDUIT IN TRENCH 2"

Category	**91313..**	Start Price (USD)	**Not Specified**
Need-By Date	**Not Specified**	Target Price (USD)	**Not Specified**
Ship-To Address	**084- CDOT RM400** **30 N. LA SALLE ST.** **ROOM 400** **Chicago, IL 60602** **United States**		

2.2.182 Line 182 GALVANIZED STEEL CONDUIT IN TRENCH 3"

Category	**91313..**	Start Price (USD)	**Not Specified**
Need-By Date	**Not Specified**	Target Price (USD)	**Not Specified**
Ship-To Address	**084- CDOT RM400** **30 N. LA SALLE ST.** **ROOM 400** **Chicago, IL 60602** **United States**		

2.2.183 Line 183 GALVANIZED STEEL CONDUIT ATTACHED TO STRUCTURE 4"

Category	**91313..**	Start Price (USD)	**Not Specified**
Need-By Date	**Not Specified**	Target Price (USD)	**Not Specified**
Ship-To Address	**084- CDOT RM400** **30 N. LA SALLE ST.** **ROOM 400** **Chicago, IL 60602** **United States**		

2.2.184 Line 184 CONCRETE FOUNDATION, 28" DIAMETER, 1 1/4" ANCHOR RODS, 15" BOLT CIRCLE, 7 FEET

Category	**91313..**	Start Price (USD)	**Not Specified**
Need-By Date	**Not Specified**	Target Price (USD)	**Not Specified**
Ship-To Address	**084- CDOT RM400** **30 N. LA SALLE ST.** **ROOM 400** **Chicago, IL 60602** **United States**		

2.2.185 Line 185 CONCRETE FOUNDATION, 30" DIAMETER, 1" ANCHOR RODS, 15" BOLT CIRCLE, 7 FEET

Category	**91313..**	Start Price (USD)	**Not Specified**
Need-By Date	**Not Specified**	Target Price (USD)	**Not Specified**
Ship-To Address	**084- CDOT RM400** **30 N. LA SALLE ST.** **ROOM 400** **Chicago, IL 60602** **United States**		

2.2.186 Line 186 ELBOW, CONDUIT, STEEL, 2" ADJACENT TO EMBEDDED POLE/STRUCTURE

Category	**91313..**	Start Price (USD)	**Not Specified**
Need-By Date	**Not Specified**	Target Price (USD)	**Not Specified**
Ship-To Address	**084- CDOT RM400** **30 N. LA SALLE ST.** **ROOM 400** **Chicago, IL 60602** **United States**		

2.2.187 Line 187 CONDUIT RISER UP POLE 2"

Category	**91313..**	Start Price (USD)	**Not Specified**
Need-By Date	**Not Specified**	Target Price (USD)	**Not Specified**
Ship-To Address	**084- CDOT RM400** **30 N. LA SALLE ST.** **ROOM 400** **Chicago, IL 60602** **United States**		

2.2.188 Line 188 ELECTRIC CABLE IN CONDUIT, 1/C NO. 6

Category	**91313..**	Start Price (USD)	**Not Specified**
Need-By Date	**Not Specified**	Target Price (USD)	**Not Specified**
Ship-To Address	**084- CDOT RM400** **30 N. LA SALLE ST.** **ROOM 400** **Chicago, IL 60602** **United States**		

2.2.189 Line 189 ELECTRIC CABLE IN CONDUIT, TRIPLEX, 2 1/C NO. 6, 1 1/C NO. 8

Category	**91313..**	Start Price (USD)	**Not Specified**
Need-By Date	**Not Specified**	Target Price (USD)	**Not Specified**
Ship-To Address	**084- CDOT RM400** **30 N. LA SALLE ST.** **ROOM 400** **Chicago, IL 60602** **United States**		

2.2.190 Line 190 CHICAGO 2000 STREET LIGHT UNIT

Category	**91313..**	Start Price (USD)	**Not Specified**
Need-By Date	**Not Specified**	Target Price (USD)	**Not Specified**
Ship-To Address	**084- CDOT RM400** **30 N. LA SALLE ST.** **ROOM 400** **Chicago, IL 60602** **United States**		

2.2.191 Line 191 EXTENDED LOOP LIGHT UNIT

Category	**91313..**	Start Price (USD)	**Not Specified**
Need-By Date	**Not Specified**	Target Price (USD)	**Not Specified**
Ship-To Address	**084- CDOT RM400** **30 N. LA SALLE ST.** **ROOM 400** **Chicago, IL 60602** **United States**		

2.2.192 Line 192 LUMINAIRE, CHICAGO 2000 PENDANT, LED, TYPE III

Category	**91313..**	Start Price (USD)	**Not Specified**
Need-By Date	**Not Specified**	Target Price (USD)	**Not Specified**
Ship-To Address	**084- CDOT RM400** **30 N. LA SALLE ST.** **ROOM 400** **Chicago, IL 60602** **United States**		

2.2.193 Line 193 LUMINAIRE, ORNAMENTAL, ACORN, LED, TYPE III

Category	**91313..**	Start Price (USD)	**Not Specified**
Need-By Date	**Not Specified**	Target Price (USD)	**Not Specified**
Ship-To Address	**084- CDOT RM400** **30 N. LA SALLE ST.** **ROOM 400** **Chicago, IL 60602** **United States**		

2.2.194 Line 194 MAINTAIN EXISTING LIGHTING square YardSTEM

Category	**91313..**	Start Price (USD)	**Not Specified**
Need-By Date	**Not Specified**	Target Price (USD)	**Not Specified**
Ship-To Address	**084- CDOT RM400** **30 N. LA SALLE ST.** **ROOM 400** **Chicago, IL 60602** **United States**		

2.2.195 Line 195 MAINTENANCE OF EXISTING FIRE ALARM CABLE, AND DISCONNECTION AND RECONNECTION OF INTERCONNECT CABLE

Category	**91313..**	Start Price (USD)	**Not Specified**
Need-By Date	**Not Specified**	Target Price (USD)	**Not Specified**
Ship-To Address	**084- CDOT RM400** **30 N. LA SALLE ST.** **ROOM 400** **Chicago, IL 60602** **United States**		

2.2.196 Line 196 REMOVE EXISTING STREET LIGHTING EQUIPMENT

Category	**91313..**	Start Price (USD)	**Not Specified**
Need-By Date	**Not Specified**	Target Price (USD)	**Not Specified**
Ship-To Address	**084- CDOT RM400** **30 N. LA SALLE ST.** **ROOM 400** **Chicago, IL 60602** **United States**		

2.2.197 Line 197 BREAKDOWN EXISTING HANDHOLE

Category	**91313..**	Start Price (USD)	**Not Specified**
Need-By Date	**Not Specified**	Target Price (USD)	**Not Specified**
Ship-To Address	**084- CDOT RM400** **30 N. LA SALLE ST.** **ROOM 400** **Chicago, IL 60602** **United States**		

2.2.198 Line 198 BREAKDOWN MANHOLE IN PARKWAY

Category	**91313..**	Start Price (USD)	**Not Specified**
Need-By Date	**Not Specified**	Target Price (USD)	**Not Specified**
Ship-To Address	**084- CDOT RM400** **30 N. LA SALLE ST.** **ROOM 400** **Chicago, IL 60602** **United States**		

2.2.199 Line 199 BREAKDOWN STREET LIGHT FOUNDATION

Category	**91313..**	Start Price (USD)	**Not Specified**
Need-By Date	**Not Specified**	Target Price (USD)	**Not Specified**
Ship-To Address	**084- CDOT RM400** **30 N. LA SALLE ST.** **ROOM 400** **Chicago, IL 60602** **United States**		

2.2.200 Line 200 TRENCH AND BACKFILL FOR ELECTRICAL WORK

Category	**91313..**	Start Price (USD)	**Not Specified**
Need-By Date	**Not Specified**	Target Price (USD)	**Not Specified**
Ship-To Address	**084- CDOT RM400** **30 N. LA SALLE ST.** **ROOM 400** **Chicago, IL 60602** **United States**		

2.2.201 Line 201 ELECTRIC CABLE IN TRENCH, 600V (XLP-TYPE USE) 1/C NO. 6

Category **91313..**
Need-By Date **Not Specified**
Ship-To Address **084- CDOT RM400**
30 N. LA SALLE ST.
ROOM 400
Chicago, IL 60602
United States

Start Price (USD) **Not Specified**
Target Price (USD) **Not Specified**

2.2.202 Line 202 ELECTRIC CABLE IN TRENCH, 600V (XLP-TYPE USE) 1/C NO. 8

Category **91313..**
Need-By Date **Not Specified**
Ship-To Address **084- CDOT RM400**
30 N. LA SALLE ST.
ROOM 400
Chicago, IL 60602
United States

Start Price (USD) **Not Specified**
Target Price (USD) **Not Specified**

2.2.203 Line 203 ELECTRIC CABLE IN CONDUIT, 600V (XLP-TYPE USE) 1/C NO. 10

Category **91313..**
Need-By Date **Not Specified**
Ship-To Address **084- CDOT RM400**
30 N. LA SALLE ST.
ROOM 400
Chicago, IL 60602
United States

Start Price (USD) **Not Specified**
Target Price (USD) **Not Specified**

2.2.204 Line 204 PATH LIGHT FIXTURE

Category **91313..**
Need-By Date **Not Specified**
Ship-To Address **084- CDOT RM400**
30 N. LA SALLE ST.
ROOM 400
Chicago, IL 60602
United States

Start Price (USD) **Not Specified**
Target Price (USD) **Not Specified**

2.2.205 Line 205 PATH UNDERPASS LUMINAIRE

Category **91313..**
Need-By Date **Not Specified**
Ship-To Address **084- CDOT RM400**
30 N. LA SALLE ST.
ROOM 400
Chicago, IL 60602
United States

Start Price (USD) **Not Specified**
Target Price (USD) **Not Specified**

2.2.206 Line 206 PATH LIGHT POLE

Category **91313..**
Need-By Date **Not Specified**
Ship-To Address **084- CDOT RM400**
30 N. LA SALLE ST.
ROOM 400
Chicago, IL 60602
United States

Start Price (USD) **Not Specified**
Target Price (USD) **Not Specified**

2.2.207 Line 207 CONTROLLER, UNDERPASS LIGHTING, WALL MOUNTED, 1 PHASE, 60 AMP

Category **91313..**
Need-By Date **Not Specified**
Ship-To Address **084- CDOT RM400**
30 N. LA SALLE ST.
ROOM 400
Chicago, IL 60602
United States

Start Price (USD) **Not Specified**
Target Price (USD) **Not Specified**

2.2.208 Line 208 SERVICE CONNECTION TO CECO LINE

Category **91313..**
Need-By Date **Not Specified**
Ship-To Address **084- CDOT RM400**
30 N. LA SALLE ST.
ROOM 400
Chicago, IL 60602
United States

Start Price (USD) **Not Specified**
Target Price (USD) **Not Specified**

2.2.209 Line 209 SERVICE INSTALLATION, 100 AMP

Category **91313..**
Need-By Date **Not Specified**
Ship-To Address **084- CDOT RM400**
30 N. LA SALLE ST.
ROOM 400
Chicago, IL 60602
United States

Start Price (USD) **Not Specified**
Target Price (USD) **Not Specified**

2.2.210 Line 210 SERVICE CABLE, 3/C NO. 2

Category **91313..**
Need-By Date **Not Specified**
Ship-To Address **084- CDOT RM400**
30 N. LA SALLE ST.
ROOM 400
Chicago, IL 60602
United States

Start Price (USD) **Not Specified**
Target Price (USD) **Not Specified**

2.2.211 Line 211 MONITORING OF EXISTING FACILITIES

Category **91313..**
Need-By Date **Not Specified**
Ship-To Address **084- CDOT RM400**
30 N. LA SALLE ST.
ROOM 400
Chicago, IL 60602
United States

Start Price (USD) **Not Specified**
Target Price (USD) **Not Specified**

2.2.212 Line 212 TRAINEES

Category **91313..**
Need-By Date **Not Specified**
Ship-To Address **084- CDOT RM400**
30 N. LA SALLE ST.
ROOM 400
Chicago, IL 60602
United States

Start Price (USD) **Not Specified**
Target Price (USD) **Not Specified**

6/27/18

CLARIFICATION #1

NOTICE OF CLARIFICATION OF E-PROCUREMENT CONTRACT DOCUMENTS

Irving Park Road Bridge over North Branch Chicago River

SPECIFICATION No: 425139 RFQ No: 6382,1

Bids will be opened in the Department of Procurement Services, Bid & Bond Room 103, City Hall Chicago, Illinois 60602, on **August 7, 2018** at 11:00 a.m. Central Time.

1) PLANS are now attached and viewable for download.

End of Clarification #1

BOOK 1
TERMS AND CONDITIONS FOR CONSTRUCTION
PROJECT TITLE: IRVING PARK ROAD BRIDGE OVER NORTH BRANCH CHICAGO RIVER

C.D.O.T. PROJECT NO.: E5038
SPECIFICATION NO.: 425139
F.A. PROJECT NO.: PHGK(424)
STATE JOB NO.: C-88-046-06
SECTION NO.: 05-E5038-00-BR

RAHM EMANUEL
MAYOR

Issued by the
DEPARTMENT OF PROCUREMENT SERVICES

JAMIE L. RHEE
CHIEF PROCUREMENT OFFICER

Federal Funding - FHWA

Document Printed, January 2018
(The City may from time to time revise these terms and conditions)

TABLE OF CONTENTS

I. GENERAL PROVISIONS ..... 2~~1~~

A. ACRONYMS 1
B. DEFINITIONS 1
C. USAGE AND CONTRACT INTERPRETATION 4
D. SEVERABILITY 5
E. ESTIMATES OF QUANTITIES 5
F. ORDER OF PRECEDENCE OF COMPONENT CONTRACT PARTS 5
G. ENTIRE AGREEMENT 6

II. PROJECT ORGANIZATION 6

A. THE COMMISSIONER 6
B. THE CHIEF PROCUREMENT OFFICER 7
C. CONTRACTOR 7

III. CONTRACTOR'S OBLIGATIONS 7

A. CONTRACTOR 7
B. SUBCONTRACTORS 9
C. SITE CONDITIONS AND INSPECTION 10
D. CLEANING UP 11
E. CONTRACTOR'S WARRANTIES AND REPRESENTATIONS 12

IV. PROPERTY 14

A. OWNERSHIP OF PROPERTY 14
B. OWNERSHIP OF DETAILED SPECIFICATIONS AND OTHER CONTRACT DOCUMENTS 14
C. RIGHT OF ENTRY 15
D. DAMAGE TO CITY PROPERTY 16
E. RIGHT TO OCCUPY BEFORE SUBSTANTIAL COMPLETION 16
F. FINAL COMPLETION AND ACCEPTANCE OF THE WORK 16

V. SHOP DRAWINGS, PRODUCT DATA, RECORDS AND SAMPLES 18

A. CONTRACTOR'S RESPONSIBILITIES AND SUBMITTAL PROCEDURES 18
B. REVIEW BY THE COMMISSIONER 20
C. SOURCE OF MATERIALS 21
D. RECORD DOCUMENTS 22
E. RECORD DRAWINGS 22
F. RECORD SHOP DRAWINGS AND PRODUCT DATA 22
G. CONSTRUCTION PROGRESS PHOTOGRAPHS 23
H. INSTRUCTIONS, PARTS LIST AND OPERATION AND MAINTENANCE MANUALS 23
I. ADJUSTMENT OF EQUIPMENT 24
J. PROJECT ACCOUNT RECORDS 24

VI. ASSIGNMENT 24

A. ASSIGNMENT OF CONTRACT BY CONTRACTOR 26
B. ASSIGNMENT OF FUNDS OR CLAIMS BY CONTRACTOR 26

C. ASSIGNMENT OF CONTRACT BY CITY 26
D. ASSIGNS 26
E. REQUESTS TO SUBCONTRACT 26

VII. QUALITY OF WORKMANSHIP, EQUIPMENT AND MATERIALS 26

A. STANDARD OF PERFORMANCE 26
B. CORRECTION OF WORK 27
C. MATERIALS AND EQUIPMENT 27
D. SUBSTITUTION OF MATERIALS 28
E. WARRANTIES 29

VIII. PERSONNEL 30

A. COMPETENCY OF WORKERS 30
B. SUPERVISION AND SUPERINTENDENCE 31
C. CONTRACTOR'S PROJECT PERSONNEL 31
D. KEY PERSONNEL 31
E. DAVIS-BACON PREVAILING WAGES 31
F. COPELAND "ANTI-KICKBACK" ACT 32
G. MINIMUM WAGE, MAYORAL EXECUTIVE ORDER 2014-1 32
H. "LIVING WAGE" 33
I. WORKING HOURS IN CITY CONTRACTS 34

IX. PERMITS AND LICENSES 34

A. CONTRACTOR OBTAINS PERMITS 34
B. CONTRACTOR PAYS PERMIT FEES 35
C. OCCUPANCY PLACARD AND FEES 35

X. COORDINATION WITH OTHER CITY DEPARTMENTS 35

A. WATER SYSTEM WORK AND USAGE 35
B. SEWER SYSTEM WORK 35
C. PARKING METER REMOVAL AND REPLACEMENT 36
D. TRAFFIC AND PARKING SIGN REMOVAL AND REPLACEMENT 36
E. TREES 37
F. DEMOLITION 37

XI. SCHEDULE 37

A. TIME 37
B. PROGRESS SCHEDULE 38
C. CONSTRUCTION OPERATIONS PLAN 38
D. CRITICAL PATH METHOD ("CPM") SCHEDULE 39
E. RECOVERY SCHEDULE 42
F. TIME FOR COMPLETING PUNCH LIST 43
G. NO DAMAGES FOR DELAY; EXTENSIONS OF TIME 43
H. SUSPENSION OF WORK 45
I. LIQUIDATED DAMAGES 45

XII. MEETINGS 46

A. PRE-CONSTRUCTION MEETING 46
B. WEEKLY REVIEW MEETINGS 46
C. MONTHLY REVIEW MEETINGS 46

XIII. PAYMENTS....47

A. CONTRACT PRICE....47
B. PROCEDURE FOR MONTHLY PAYMENT REQUESTS AND FINAL PAYMENT....47
C. PAYMENT FOR STORED MATERIAL....49
D. RETAINAGE....50
E. PAYMENTS WITHHELD....50
F. PROMPT PAYMENT TO SUBCONTRACTORS....52
G. PAYMENT FOR CHANGES....55
H. NIGHT, SUNDAY AND HOLIDAY WORK....61
I. ACCELERATION....61
J. PAYROLL CANVASS REPORTS....61
K. ELECTRONIC ORDERING AND INVOICES....61

XIV. CHANGES IN THE WORK....62

A. CITY'S RIGHT TO CHANGE WORK....62
B. CONTRACTOR'S REQUEST....62
C. CONTRACT MODIFICATION....62
D. CONTRACTOR'S RELEASE....62
E. PERFORMANCE OF CHANGED WORK....62
F. CHANGE CLAIMS AND DISPUTES....63

XV. TESTING & INSPECTION....63

A. MATERIAL, INSPECTION AND RESPONSIBILITY....63
B. INSPECTION OF THE WORK....63
C. MATERIALS AND EQUIPMENT TESTING AND INSPECTION....64
D. TESTING LABORATORY LABELS....65

XVI. CONTRACTOR PRACTICES AT SITE....65

A. COOPERATION AMONG CONTRACTORS....65
B. PROTECTION OF PERSONS AND PROPERTY....66
C. PROTECTION OF STREETS, ALLEYS AND PUBLIC GROUNDS....69
D. PROTECTION OF EXISTING TREES IN THE RIGHT OF WAY....69
E. CARE OF EXISTING STRUCTURES AND PROPERTY....71
F. PRECAUTIONS AND SAFETY....75
G. HEALTH, SAFETY AND SANITATION....76
H. HAZARDOUS OPERATIONS AND SECURITY....78
I. SERVICES AND USE OF SITE....79
J. REPORTS AND PLANS....82

XVII. STANDARD SPECIFICATIONS....82

A. CONCRETING IN FREEZING WEATHER....82
B. PROTECTION OF RAILROAD TRAFFIC AND PROPERTY....82

XVIII. ENVIRONMENTAL REQUIREMENTS....83

A. COMPLIANCE WITH ENVIRONMENTAL LAWS....83
B. ENVIRONMENTAL PERMITS....83
C. DISPOSAL OF MATERIALS, CONSTRUCTION DEBRIS, SOIL AND WASTE....84
D. EQUIPMENT AND ENVIRONMENTAL CONTROL DURING TRANSPORT....85
E. ENVIRONMENTAL CONTROL....85
F. OPEN DUMPING PROHIBITED....85

G. ENVIRONMENTAL PROTECTION....86
H. CLEAN DIESEL FLEET (SECTION 2-92-595 OF THE CHICAGO MUNICIPAL CODE)....87

XIX. INSURANCE, INDEMNITY AND BONDS....88

A. INDEMNITY....88
B. CONTRIBUTION....89
C. ADMIRALTY....89
D. PERFORMANCE AND PAYMENT BONDS....90
E. INSURANCE....90

XX. CLAIMS AND DISPUTES....91

A. GENERAL....91
B. CLAIMS....91
C. DISPUTES....92

XXI. EVENTS OF DEFAULT AND TERMINATION....92

A. CHIEF PROCUREMENT OFFICER'S RIGHT....92
B. EVENTS OF DEFAULT....92
C. REMEDIES....93
D. NONEXCLUSIVITY OF REMEDIES....95
E. ADJUDICATION OF TERMINATION....95
F. EARLY TERMINATION....95
G. NON-APPROPRIATION....96

XXII. COMPLIANCE WITH ALL LAWS....96

A. CONTRACTOR MUST COMPLY WITH ALL LAWS....96
B. CIVIL RIGHTS ACT OF 1964, TITLE VI, COMPLIANCE WITH NONDISCRIMINATION REQUIREMENTS....97
C. BUSINESS RELATIONSHIPS WITH ELECTED OFFICIALS....101
D. INSPECTOR GENERAL AND LEGISLATIVE INSPECTOR GENERAL....101
E. GOVERNMENTAL ETHICS ORDINANCE....101
F. FALSE STATEMENTS....101
G. AMERICANS WITH DISABILITIES ACT....102
H. PROHIBITION ON CERTAIN CONTRIBUTIONS – MAYORAL EXECUTIVE ORDER 2011-4....102
I. LICENSING OF GENERAL CONTRACTORS....103
J. BUY AMERICA....103
K. STEEL PRODUCTS....104
L. NO WASTE DISPOSAL IN PUBLIC WAY MCC 11-4-1600(E)....104
M. DEEMED INCLUSION....105
N. FIRMS OWNED OR OPERATED BY PEOPLE WITH DISABILITIES....105
O. 2014 CITY HIRING PLAN PROHIBITIONS....105
P. DUTY TO REPORT CORRUPT ACTIVITY....106
Q. EQUAL PAY....106
R. ECONOMIC DISCLOSURE STATEMENT AND AFFIDAVIT AND APPENDIX A ("EDS")....106
S. WHEEL TAX (CITY STICKER)....108
T. EDS UPDATE OBLIGATION....108
U. ELECTRONIC MAIL COMMUNICATION....108

XXIII. MISCELLANEOUS....108

A. COUNTERPARTS....108
B. MODIFICATIONS....108

C. NO WAIVER OF LEGAL RIGHTS 108
D. CONTRACTOR'S GOVERNING LAW 109
E. CONSENT TO SERVICE OF PROCESS AND JURISDICTION 109
F. CONTRACTOR COOPERATION 110
G. JOINT AND SEVERAL LIABILITY 110
H. NO THIRD PARTY BENEFICIARIES 110
I. NOTICES 110
J. AUTHORITY 110
K. SOFTWARE LICENSE AGREEMENTS 111
L. TITLE VI SOLICITATION NOTICE 111

XXIV. NOTICE OF REQUIREMENTS FOR AFFIRMATIVE ACTION TO ENSURE EQUAL EMPLOYMENT OPPORTUNITY (EXECUTIVE ORDER 11246) 112

XXV. EQUAL EMPLOYMENT OPPORTUNITY 113

XXVI. OTHER FEDERAL PROVISIONS 113

XXVII. STANDARD FEDERAL EQUAL EMPLOYMENT OPPORTUNITY CONSTRUCTION CONTRACT SPECIFICATIONS (EXECUTIVE ORDER 11246) 116

XXVIII. SPECIAL CONDITIONS REGARDING DISADVANTAGED BUSINESS ENTERPRISE COMMITMENT 122

1.1. POLICY AND TERMS 123
1.1.1. Contract-Specific DBE Participation Goal 123
1.1.2. DBE Financial Institutions 124
1.1.3. DBE Participation Goals for Contract Modifications 124
1.2. DEFINITIONS AND USAGE 125
1.3. THIRD PARTY CHALLENGES TO ELIGIBILITY OF DBE FIRM 125
1.4. JOINT VENTURES 126
1.5. COUNTING DBE PARTICIPATION TOWARD THE CONTRACT DBE PARTICIPATION GOAL 127
1.6. PROCEDURE TO DETERMINE BID/PROPOSAL COMPLIANCE 129
1.6.1. Schedule B: Affidavit of DBE/Non-DBE Joint Venture 129
1.6.2. Schedule C, C-1 or C-3: Letter of Intent to Perform as a Subcontractor, Consultant, Subconsultant or Material Supplier 129
1.6.3. Schedule D, D-1 or D-3: Affidavit of Prime Contractor Regarding DBEs 129
1.6.4. Schedule F: Report of Subcontractor Solicitations 130
1.6.5. Letters of Certification 130
1.6.6. Procedure 130
1.7. GOOD FAITH EFFORTS 131
1.7.1. Demonstration of Good Faith Efforts 131
1.7.2. Documentation of Good Faith Efforts 132
1.8. REPORTING 134
1.9. REQUIRED ASSURANCE 135
1.10. DBE SUBSTITUTIONS 135
1.11. NON-COMPLIANCE 137
1.12. ARBITRATION (FAA FUNDED CONTRACTS) 137
1.13. PRIME CONTRACTOR ASSISTANCE 138
1.14. RECORD KEEPING 138
1.15. DBE FINANCIAL INSTITUTIONS 139
1.16. ASSISTANCE AGENCIES 139

1.17. EQUAL EMPLOYMENT OPPORTUNITY.....139

XXIX. FHWA-FORM 1273.....140

I. GENERAL PROVISIONS

A. Acronyms

"ACI" - American Concrete Institute

"AED" - Associated Equipment Distributors

"AISC" - American Institute of Steel Construction.

"ANSI" - American National Standards Institute.

"ASME" - American Society of Mechanical Engineers.

"ASTM" - American Society for Testing and Materials

"CPM" - Critical Path Method (See XI, Schedule)

"CPO" - Chief Procurement Officer

"CTA" - Chicago Transit Authority

"EDS" - See Section XXII.R.

"IDOT" - Illinois Department of Transportation

"NFPA" - National Fire Protection Association

"OSHA" - U.S. Occupational Safety and Health Administration

"SSRBC" - IDOT Standard Specifications for Road and Bridge Construction issued by IDOT, as amended from time to time. See: http://www.idot.illinois.gov/doing-business/procurements/engineering-architectural-professional-services/Consultants-Resources/index

B. Definitions

1. "Architect/Engineer" means the person designated by the Commissioner to provide the Contract drawings and Detailed Specifications for the Work you are to perform.
2. "Business Days" means Monday through Friday, unless an officially designated City holiday falls on one of those days. By contrast, see "Day" and "Working Day."
3. "Chief Procurement Officer" means the Chief Procurement Officer for the City of Chicago, and any representative duly authorized in writing to act on his/her behalf.
4. "City" means the City of Chicago, a municipal corporation and home rule unit of government existing under the Constitution of the State of Illinois.
5. "Commissioner" means the head of the Department and any designee duly authorized in writing to act on his/her behalf. See also "Department."
6. "Comptroller" means City Comptroller or his designated representative.
7. "Consultant(s)" refers to the person, firm or corporation awarded a contract by the City to provide professional architectural or engineering design services or construction supervision for the Project.
8. "Contract" means this Contract, including your bid proposal (as accepted by the City), the City's bid specification, which includes Books 1, 2, and 3, plans and drawings, addenda, all exhibits and schedules that are attached to it and documents incorporated in it by reference; fully executed performance and payments bond(s); and all

amendments, modifications, or revisions made from time to time in accordance with its terms.

9. "Contract Completion Date" is the date, determined by the Commissioner, on which the Project is to reach Substantial Completion. The Contract Completion Date will be determined based on the duration for the Project set by the Contract as adjusted by any Contract modifications that extend or reduce the duration of the Project.
10. “Contract Modification” means a written modification of the terms and conditions of this Contract, signed by you, the Chief Procurement Officer, the Mayor and the Comptroller.
11. “Contractor” or “you” means the person who is awarded the Contract.
12. “Contract Price” is defined in Section XIII.A.
13. “Contract Time” is the duration of the Work from when the Work is required to begin until the scheduled date for Substantial Completion, including approved time extensions. See “Substantial Completion.”
14. “Corporation Counsel” means the head of the City’s Department of Law and any Assistant Corporation Counsel duly authorized to act on the Corporation Counsel’s behalf.
15. “Day” means calendar day.
16. “Daytime Work” means work performed between the hours of 6:00 a.m. to 6:00 p.m.
17. “Department” means the City Department identified on the cover of this Contract.
18. “Detailed Specifications” means the written requirements for materials and equipment to be used in the Work, including any plans or drawings, and standards of performance for the Work, which are set forth in Book 3 or incorporated by reference.
19. “Environmental Laws” means all applicable Federal, State, and local laws, ordinances, rules, regulations, and executive orders pertaining to environmental matters.
20. “Equipment” means all machinery and equipment, together with the necessary supplies for upkeep and maintenance, and all tools and apparatus necessary for the proper and acceptable completion of the Work.
21. “Field Order” means the written order to you, signed by the Commissioner, unilaterally directing changes in the Work or the Contract Time, or directing you to take corrective action and to adhere to Contract.
22. "Final Completion and Acceptance of the Work " means the last date on which all of the following events have occurred: (i) the Commissioner has determined that all Punch List Work and any other remaining Work have been completed in accordance with the Contract; (ii) final inspections have been completed and operations systems and equipment testing have been completed; (iii) final occupancy certifications have been issued; (iv) all deliverables have been provided to the Commissioner; and (v) all contractual requirements for final payment have been completed.
23. “Hazardous Materials” means asbestos and asbestos-containing materials, polychlorinated biphenyls (PCBs), oil or any other petroleum products, natural gas, special nuclear materials, and by-product materials regulated under the Atomic Energy

Act (42 U.S.C. Sec. 2014, et seq.), pesticides under the Federal Insecticide, Fungicide and Rodenticide Act (7 U.S.C. Sec. 136, *et seq.*) and any hazardous waste, toxic substance or related material, including any substance defined or treated as "hazardous waste," “special waste,” or "toxic substance" (or comparable term) in any Environmental Law.

24. “Include” (in all of its forms) means “include without limitation” unless the context clearly indicates otherwise.
25. “Management Consultant” or “Program Manager” means the organization or entity, if any, that the City has retained to oversee the planning, design, and construction of the Project.
26. “Municipal Code” means the Municipal Code of Chicago.
27. "Night Work" means work performed between the hours of 6:00 p.m. and 6:00 a.m. unless otherwise defined in the plans.
28. “Notice to Bidders” means the Advertisement for Bids, the official notice inviting bids for the proposed Work to be done under this Contract.
29. “Notice to Proceed” means written authorization from the Commissioner for you to commence the Work on a specified date.
30. “Product Data” are illustrations, standard schedules, performance charts, instructions, descriptive literature, catalogs and brochures, performance and test data, test certifications, diagrams and other information furnished by you to illustrate a material, product or system for some portion of the Work.
31. “Project” means, collectively, the improvements you are to construct in accordance with the Contract.
32. “Provide” means furnish and install, unless otherwise specified in this Contract.
33. “Punch List” or “Punch List work” means minor adjustments, repairs or deficiencies in the Work, as determined by the Commissioner in his or her sole discretion.
34. “Record Documents” are all documents pertaining to the completed Work and the Project that the Contract requires you to provide to the City, including Record Drawings, Record Shop Drawings, product data, instructions, parts list, certified payrolls and operations and maintenance manuals.
35. “Record Drawings” means drawings reflecting the final built Project configuration, including approved modifications.
36. “Samples” mean physical examples that illustrate materials, equipment or workmanship. Samples include materials, fabricated items, equipment, devices, appliances, or parts of them, as called for in the Detailed Specifications and any other Samples that may be required by the Commissioner to determine whether the kind, quality, construction, workmanship, finish, color and other characteristics of the materials proposed by you conform to the required characteristics.
37. “Shop Drawings” means drawings, diagrams, schedules and other data specially prepared for the Work by you or any Subcontractor, manufacturer, supplier or distributor

to illustrate some portion of the Work. Shop Drawings include: fabrication, erection, layout and setting drawings; manufacturer's standard drawings; schedules; wiring and control diagrams; and other drawings pertaining to materials, equipment and systems and methods of construction that may be required to show that the materials, equipment or system conform to the Contract requirements. Shop drawings must establish the actual detail of all manufactured and fabricated items and indicate the proper relation to the adjoining Work.

38. “Special Wastes” means those substances as defined in the Illinois Environmental Protection Act, 415 ILCS 5/3.45, and further defined in Section 809.103 of 35 Illinois Administrative Code, Subtitle G, Ch. 1.
39. “Standard Specifications” means the SSRBC.
40. “State” means the State of Illinois.
41. “Subcontractor” means any person or entity with whom you contract to provide any part of the Work, and all subcontractors of any tier, including suppliers and material persons, whether or not in privity with you.
42. “Submittal” means Schedule, Shop Drawings, Product Data or Samples and other items that the Contract may require you to submit to the Commissioner.
43. “Substantial Completion Date” is the date upon which you have met the requirements for Substantial Completion in the opinion of the Commissioner.
44. “Substantial Completion of the Project” or “Substantial Completion” means that, in the opinion of the Commissioner, you have completed all Work in accordance with the Contract, except for Punch List Work, and the City is able to occupy and use the Project for the purpose intended.
45. “Work” means all labor, materials, equipment, deliverables, and other incidentals to be provided by you under this Contract that are necessary or convenient to the successful completion of this Project and that are required by, incidental or collateral to the Contract.
46. "Working Day" has the same meaning as in the SSRBC.
47. “You” means “Contractor.” See above.

C. Usage and Contract Interpretation

1. Unless a contrary meaning is specifically noted elsewhere, words such as, “as required,” “as directed,” “as permitted,” and similar words mean that requirements, directions of, and permission of the Commissioner are intended. The words “approved,” “acceptable,” “satisfactory,” or words of like import, mean “approved by,” “acceptable to,” or “satisfactory to” the Commissioner. The words “necessary,” “proper,” or words of like import as used regarding the extent, conduct or character of the Work specified means that Work must be conducted in a manner, to the extent, or be of character that is “necessary” or “proper” in the opinion of the Commissioner. The Commissioner’s judgment in these matters is final and you are not permitted to contest it.

2. Where the imperative form of an address is used, such as “perform the excavating,” “provide equipment required,” “remove obstructions encountered,” “furnish and install reinforcing steel bars,” etc., that address is directed to you .
3. Any headings in this Contract are for convenience of reference only and do not define or limit its terms or provisions. All article and section references, unless otherwise expressly indicated, are to sections of this Contract. Words importing persons include firms, associations, partnerships, trusts, corporations, joint ventures and other legal entities, including public bodies, as well as natural persons. Words of any gender include correlative words of other genders. Words importing the singular number include the plural and vice versa, unless the context otherwise indicates. All references to any exhibit or document include the latest version and all supplements and/or amendments to any such exhibits or documents. All references to any person or entity include any person or entity succeeding to the rights, duties, and obligations of those persons or entities in accordance with the terms and conditions of this Contract.
4. Whenever reference to a law is contained in this Contract, the reference includes any amendments to the law.

D. Severability

If any provision of this Contract is inoperative or unenforceable as applied in any particular case in any jurisdiction or jurisdictions because it conflicts with any other provision of this Contract, or of any constitution, statute, ordinance, rule of law, or public policy, or for any other reason, those circumstances will not render the provision in question inoperative or unenforceable in any other case or circumstance, or render any other provision or provisions of this Contract invalid, inoperative, or unenforceable to any extent whatever. The invalidity of any phrases, sentences, clauses, or sections contained in this Contract will not affect the remaining portions of this Contract or any part of it.

E. Estimates of Quantities

If an estimate of quantities of Work is listed in the Bid Schedule of Prices, Contractor understands that:

1. the estimate is approximate only;
2. the City does not expressly or by implication represent or warrant that the actual quantities involved will correspond to the estimate;
3. payment to you will be made only for the actual quantities furnished and installed in accordance with the terms of this Contract; and
4. the Chief Procurement Officer and the Commissioner reserve the right to jointly order, in writing, to increase, decrease or delete quantities of Work pursuant to all terms and conditions of the Contract.

F. Order of Precedence of Component Contract Parts

The order of precedence of the component contract parts is as follows:

1. Terms and Conditions;
2. Addenda if any;
3. Plans or City Drawings;
4. Detailed Specifications;
5. Standard Specifications of the City, State or Federal Government, if any;
6. Advertisement for Bids (copy of advertisement to be attached to back of cover);
7. Requirements for Bidding and Instructions to Bidders; and
8. Performance Bond, if required.

The foregoing order of precedence governs the interpretation of the Contract in all cases of conflict or inconsistency in it.

G. Entire Agreement

The Contract constitutes the entire agreement between the parties with respect to its subject matter, and no other oral or written understandings, representations, inducements, consideration, promises, or interpretations are implied or impressed upon this Contract that are not expressly addressed in it.

II. PROJECT ORGANIZATION

A. The Commissioner

For the purposes of this Contract, the Commissioner, or any successor office to the Commissioner, will represent the City in all matters relating to the performance of Contractor's Work under this Contract and will constitute the point of receipt for all deliverables required under this Contract, unless expressly specified otherwise in this Contract. The Commissioner will decide all questions that arise with regard to the administration of the Contract such as to the quality and acceptability of materials furnished, the Work performed and rate of progress of the Work. The Commissioner will determine the amount and quality of Work performed and materials furnished and their estimates. The Commissioner's estimate will be a condition precedent to Contractor's right to receive money due under the Contract, but then only if the modifications or amendments to the Contract are approved in accordance with Article XIV, “Changes in the Work."

B. The Chief Procurement Officer

The approval of the Chief Procurement Officer is required to enter this Contract and to modify it.

C. Contractor

The Work is under your charge and care until Final Completion and Acceptance of the Work, unless otherwise specified elsewhere in the Contract.

III. CONTRACTOR'S OBLIGATIONS

A. Contractor

1. Except as may be expressly provided otherwise in the Contract, Contractor is solely responsible for selecting the means, methods, techniques, sequences, and procedures used in performing the Work. The intent of the Detailed Specifications is to describe the completed Work that Contractor must provide to fulfill the requirements of the Contract. The Detailed Specifications are not intended to cover every detail of materials, parts, or activities necessary to complete the Work. Contractor must perform all activities that may be required or necessary to complete the Work in accordance with the Contract. For the Contract Price, Contractor must construct, furnish and install all materials, parts and labor necessary to complete the entire Work, whether or not the Contract particularly specifies or shows the details of Work.
2. The Work under this Contract has not been completely segregated into divisions of Work to be performed by any trade or Subcontractor. Contractor is responsible for all division of work. However, wherever any provision of any section of the specifications conflicts with any agreements or regulations of any kind at any time in force among members of any trade or craft associations, unions or councils that regulate or distinguish that work is or is not included in the work of any particular trade, Contractor must make all necessary arrangements to reconcile any such conflict without delay, damage, or cost to the City.
3. Before submission of your bid, Contractor must (i) inspect the site of the proposed Work and familiarize itself with all the site conditions that may affect its performance of the Work; and (ii) review the Detailed Specifications, plans and drawings provided with the bid documents, as required in the "Requirements for Bidding and Instructions to Bidders," in Book 2. If at any time before the bid opening Contractor discovers any errors, discrepancies or omissions in the Contract or any discrepancy between the Contract and the physical conditions at the site or in any drawings that may be provided later, Contractor must notify the Chief Procurement Officer immediately, in writing for an interpretation through an Addendum.
4. This written request must be received by the Chief Procurement Officer no later than 10 days before bid opening, or no response will be provided. Contractor will not be allowed to take advantage of its discovery of any such error or omission or discrepancy in the Contract after the award of the Contract. Any Work done after the discovery, unless authorized by the Chief Procurement Officer, will be done at Contractor's expense.

5. Except as otherwise expressly provided in the Contract, the Contract Price includes all costs and expenses for which Contractor will be compensated in connection with the Contract, including:
   a. the costs of performing any or all of Contractor's obligations and duties under the Contract;
   b. the costs of all materials, equipment, supplies, tools, machinery, labor, supervision, management and items of any and all kinds that are or may be necessary and incidental to the full and satisfactory completion of the Work, whether or not specified or indicated in the Contract;
   c. the costs of permits, insurance, bonds and license;
   d. the costs associated with any risks Contractor assumes under the Contract;
   e. the costs associated with all warranties and guarantees;
   f. the costs of complying with the directives of the Chief Procurement Officer and/or the Commissioner;
   g. the costs of complying with all laws applicable to the Contract; and
   h. all overhead and profit.
6. No term of the Contract that further specifically indicates that Contractor must bear the costs of an item or that further specifically indicates that an item will be performed at no additional cost to the City will be construed or interpreted to in any way limit the foregoing.
7. Contractor must begin the Work on the date specified in the Notice to Proceed. In addition, upon receipt of the Notice to Proceed, Contractor must assign and maintain during the term of the Contract and any extension of it, an adequate staff of competent personnel who are fully equipped, licensed as appropriate, available as needed, and qualified to perform the Work. Contractor must include among its staff such personnel and positions as the Contract may require.
8. If, in the reasonable opinion of the Commissioner, the performance of personnel assigned to the Work is at an unacceptable level, or does not comply with the provisions of Section VIII.A, “Competency of Workers,” those personnel must cease to be assigned to this Work and must return to Contractor. Contractor must then furnish to the Commissioner the name of a substitute person or persons in accordance with Section III.A.6. Absence of sufficient qualified personnel for the Work constitutes an event of default.
9. Contractor must supervise and direct the Work competently and efficiently, devoting such attention and applying such skills and expertise as may be necessary to perform the Work in accordance with the Contract. Contractor is responsible for providing a finished Project that complies fully with the Contract.
10. Risk of Loss. The Work is under Contractor's charge and care until Final Completion and Acceptance of the Work by the Commissioner, unless otherwise specified in the Contract. Contractor assumes all responsibility for injury or damage to the Work by action of the elements, fire or any other causes whatsoever, including injury or damage

arising from the execution or non-execution of the Work. Contractor must rebuild, repair, restore and make good, at no additional cost to the City, all injuries or damages to any portion of Contractor's Work before Final Completion and Acceptance of the Work.

11. When the City furnishes equipment or materials to Contractor for use or inclusion in the Work, Contractor must safeguard all such equipment and materials as Contractor would equipment and materials that Contractor furnished.
12. The Work will not be considered to be completed and accepted until Contractor receives written notice from the Commissioner confirming the Final Completion and Acceptance of the Work.
13. If Contractor has any questions or concerns with respect to the Detailed Specifications or Contract drawings, Contractor must raise them with the Commissioner.
14. Except as specified below, Contractor must perform with its own organization and forces not less than 50% of the total amount of Work that is performed at the Project site, computed on the basis of cost. Contractor must require each Subcontractor to become familiar with all provisions of the Contract documents that may affect Subcontractor's work.

B. Subcontractors

1. All rights and obligations under this Contract are by and between the City and Contractor. Except as may otherwise be provided in the Contract, there is no privity between Subcontractors and the City. Subcontractors have no rights as third-party beneficiaries under this Contract except as may be provided in Article XXVIII. Contractor must implement such measures as may be necessary to ensure that its Subcontractors are bound by all applicable provisions of the Contract.
    a. All Subcontractors are subject to the approval of the Chief Procurement Officer. Contractor must not substitute a Subcontractor previously accepted by the Chief Procurement Officer unless the substitution is acceptable to the Chief Procurement Officer. All requests to subcontract must be submitted on a form approved by the Chief Procurement Officer.
    b. Contractor is responsible in all aspects and at all times for all Subcontractor Work.
2. Except as required under Article XXVIII, Contractor must upon request furnish the Chief Procurement Officer with one copy of each written subcontract and subsequent modifications signed by Contractor and the Subcontractor evidencing the agreement. All subcontracts must be in writing. All subcontracts must require that (i) all Contractor’s Subcontractors’s Work be performed in strict accordance with this Contract: and (ii) the Subcontractor is bound by and subject to the requirements of this Contract, whether or not a particular provision specifically mentions Subcontractors. Subcontracts may contain different provisions than are provided in this Contract with respect to payments, schedules, and matters not affecting the quality or timely completion of the Work under this Contract, but only if the City's rights are not thereby prejudiced and they are in accordance with any requirements of the funding federal agency, if applicable. Contractor must require each Subcontractor to enter into similar subcontracts with its Subcontractors. Contractor must make available to each Subcontractor, before the

execution of the subcontract, copies of this Contract, to which the Subcontractor will be bound pursuant to the requirements of this Section III.B.4.

If a subcontract provided to the City does not comply with these requirements, the City's failure to object is not a waiver of them, and you will remain liable to the City for all damages, costs, fines, losses and claims arising out of the non-compliance.

3. In the case of Work performed by Subcontractors, Contractor must secure warranties from the Subcontractors addressed to and in favor of the City; deliver copies of them to the City upon completion of the Subcontractors' Work and; guarantee and assume full responsibility for the performance of any repair or replacement Work that may be required for the full period of the warranties provided. However, the delivery of the warranties will not relieve you from any obligations assumed under this Contract.

4. Contractor hereby collaterally assigns any or all subcontracts to the City, effective upon the City's exercise, it its sole discretion, of its right to assume such assignment as a remedy for Contractor's default or in the event of early termination. The Contractor must require each of your Subcontractors (including materialmen) to consent to a collateral assignment to the City of their respective subcontract with the Contractor. The Contractor's subcontracts must include language stating:

> *Contractor has collaterally assigned this subcontract to the City of Chicago, effective upon written assumption of such assignment by the City in the event of Contractor's default or early termination of Contractor's contract with the City. Subcontractor hereby consents to such assignment and assumption. Subcontractor acknowledges and agrees that, in the event of such an assignment and assumption, the City will have no liability to Subcontractor for work performed by Subcontractor prior to the effective date of the assignment and assumption and that Subcontractor shall look solely to Contractor for any compensation or other obligations arising under the subcontract prior to such date.*

5. The City encourages Contractors to use Subcontractors that are firms owned or operated by individuals with disabilities, as defined by § 2-92-586 of the Municipal Code, where not otherwise prohibited by Federal or State law.

6. Compliance with Multi-Project Labor Agreement (PLA). The City has entered into the PLA with various trades regarding projects as described in the PLA, which is hereby incorporated by reference. A copy of the PLA, with appendices, may be found on the City's website at http://www.cityofchicago.org/PLA. Contractor acknowledges familiarity with the requirements of the PLA and its applicability to any work under this agreement, and shall comply in all respects with the PLA.

C. Site Conditions and Inspection

1. Surveys, soil borings, geotechnical information, data, plans or other materials generally describing the unimproved land or existing structures at the site may be provided to you by the City. Such information is not warranted by the City to be accurate. You are not entitled to rely on it. In signing this Contract you are acknowledging that when such information appears in Contract documents, prepared by the City or its Consultants, the

City and its Consultants have not verified the information. Site plans do not constitute any representation by the City to you of site boundaries or characteristics.

2. You must take field measurements, verify field conditions and carefully compare those field measurements and conditions and any other information known to you with the Contract documents before commencing the Work. No allowance will be made to you for any extra labor and/or materials required due to site conditions or discrepancies that might have been discovered by a thorough and proper inspection of the site. If land surveying Work is required under this Contract, you must have the Work performed by a land surveyor that is licensed as such by the State of Illinois.
3. If conditions are encountered at the site which are (i) subsurface or otherwise unknown or concealed physical conditions which differ materially from those indicated in the Contract; or (ii) pre-existing unknown physical conditions of an unusual nature, which differ materially from those ordinarily found to exist and generally recognized as inherent in activities of the character provided for in the Contract, including the presence of unanticipated Hazardous Materials, then you must provide immediate written notice to the Commissioner before proceeding with the work or disturbing those areas.
4. If the conditions differ materially from those indicated in the Contract, and cause a material increase or decrease in your cost or time required for the performance of any part of the Work, an equitable adjustment in the Contract Price or Contract Time, or both, will be made under Article XIV, “Changes in the Work.”
5. You must keep on hand at the Work site, for reference, a complete set of Contract documents for the Work, copies of all plans and shop drawings, all additional and revised plans furnished by the City and all orders issued to you by the Commissioner that relate to the Work.

D. Cleaning Up

During the construction, you must keep the Work site and adjacent premises as free from material, debris, and rubbish as is practicable and must remove them entirely and at once, if in the opinion of the Commissioner, the material, debris or rubbish constitutes a nuisance, a safety hazard, or is objectionable in any way to the public. Upon verbal and/or written notification of unacceptable work day conditions by the City, you will be responsible for immediate rededication within 48 hours of notification. Your failure to act accordingly will result in completion of remediation work by the City at your expense.

As a condition of Final Completion and Acceptance of the Work, you must remove from the Work site and adjacent premises all machinery, equipment, surplus materials, falsework, excavated and useless materials, rubbish, temporary buildings, barricades and signs, and must restore the site to the same general conditions that existed before the Work began.

You must clean off all cement streaks or drippings, paint smears or drippings, rust stains, oil, grease, dirt, and any other foreign materials deposited or accumulated on any portion of the Work, or existing work, due to your operations.

You are solely responsible for and must assume all liability associated with off-site disposal of any Hazardous Materials generated as a result of your construction activities.

E. Contractor's Warranties and Representations

You warrant and represent that:

1. You have carefully examined and analyzed the provisions and requirements of this Contract; you have inspected the Work site(s) to the extent made available by the City; from your own analysis you have satisfied yourself as to the nature and scope of work, all conditions, any obstructions and requirements needed for the preparation of your bid and the performance of this Contract, the general and local conditions, and all other matters that in any way may affect this Contract or your performance; and the time available for the examination, analysis, inspection and investigation was adequate;

2. This Contract is feasible of performance in accordance with all of its provisions and requirements and that you can and will perform, or cause to be performed, the Work in strict accordance with the provisions and requirements of this Contract;

3. Except for the contents of this Contract, no representation, statement or promise, oral or written, or of any kind whatsoever, by the City, its officials, agents, representatives or employees, has induced you to submit a bid nor have you relied upon any, including any reference to (i) the meaning, correctness, suitability or completeness of any provisions or requirements of this Contract; (ii) the nature, existence, or location of materials, structures, obstructions, utilities or conditions, surface or subsurface, that may be encountered at or on the Work site; (iii) the nature, quantity, quality or size of any materials, equipment, labor and other facilities needed for the performance of this Contract; (iv) the general conditions that may in any way affect this Contract or its performance; (v) the compensation provisions of the Contract; or (vi) any other matter;

4. You were given ample opportunity and time to review the Contract documents before submittal of your bid in order that you might request an addendum to the Contract documents that might correct or clarify them; you did so review the Contract documents, and every such correction or clarification has been included in this Contract or else, if omitted, you expressly relinquish the benefit of them and are willing to perform this Contract in its entirety without claiming reliance on any such omission or making any other claim on account of the omission;

5. This section does not limit the Contractor’s and its Subcontractors’ duty to comply with all applicable Federal, State, County and Municipal laws, statutes, ordinances and executive orders, in effect now or later, and whether or not they appear in this Contract.

6. Non-compliance with these terms and conditions may be used by the City as grounds for the termination of this Contract, and may further affect the Contractor's eligibility for future contract awards.

7. In accordance with § 11-4-1600(e) of the Municipal Code, Contractor warrants and represents that it, and to the best of its knowledge, its Subcontractors have not violated and are not in violation of the following sections of the Code (collectively, the Waste Sections):

   7-28-390 Dumping on public way;
   7-28-440 Dumping on real estate without permit;
   11-4-1410 Disposal in waters prohibited;
   11-4-1420 Ballast tank, bilge tank or other discharge;

11-4-1450 Gas manufacturing residue;
11-4-1500 Treatment and disposal of solid or liquid waste;
11-4-1530 Compliance with rules and regulations required;
11-4-1550 Operational requirements; and
11-4-1560 Screening requirements.

During the period while this Contract is executory, Contractor's or any Subcontractor's violation of the Waste Sections, whether or not relating to the performance of this Contract, constitutes a breach of and an event of default under this Contract, for which the opportunity to cure, if curable, will be granted only at the sole discretion of the Chief Procurement Officer. Such breach and default entitles the City to all remedies under the Contract, at law or in equity.

8. Contractor warrants and represents that neither Contractor nor an Affiliate, as defined below, appears on the Specially Designated Nationals List, the Denied Persons List, the Unverified List, the Entity List, or the Debarred List as maintained by the Office of Foreign Assets Control of the U.S. Department of the Treasury or by the Bureau of Industry and Security of the U.S. Department of Commerce or their successors, or on any other list of persons or entities with which the City may not do business under any applicable law, rule, regulation, order or judgment.

9. "Affiliate" means a person or entity which directly, or indirectly through one or more intermediaries, controls, is controlled by or is under common control with Contractor. A person or entity will be deemed to be controlled by another person or entity if it is controlled in any manner whatsoever that results in control in fact by that other person or entity, either acting individually or acting jointly or in concert with others, whether directly or indirectly and whether through share ownership, a trust, a contract or otherwise.

10. You understand that the City, in its acceptance of your proposal to perform the Work, materially relied upon your response to the Advertisement for Bids. The information you provided with the bid was accurate at the time it was made and no material changes in the information have occurred since then and will not be made without the express consent of the City.

11. In preparing and submitting your bid for this Contract, you have complied with and given full consideration to the following bidding requirements:

    a. You obtained for bidding purposes copies of the complete Contract as identified in the Advertisement for Bids and all addenda issued by the City and have become familiar with them and all Contract requirements and conditions described in them;

    b. You clarified to your satisfaction and complete understanding any doubt as to the true meaning and intent of all parts of the specifications and plans or other portions of the Contract documents;

    c. You have no claim for relief because of alleged mistakes or omissions in your bid, and you will be held strictly to your bid as presented.

    d. You have the capability and financial resources to perform all of the provisions and requirements of this Contract.

e. You can perform all of your obligations under this Contract in accordance with all of the Contract's provisions and requirements.

12. Contractor warrants that no member of the governing body of the City or other units of government and no other officer, employee, or agent of the City or other unit of government who exercises any functions or responsibilities in connection with the Project to which this Contract pertains, has any personal interest, direct, or indirect, in this Contract. In accordance with 41 USC § 22, no member of or delegate to the Congress of the United States will be permitted to any share or part of this Contract or to any financial benefit to arise from it, nor, under applicable laws, will any member of or delegate to the Illinois General Assembly nor any alderman of the City or City employee. Contractor warrants that its officers, directors and employees, and the officers, directors and employees of each of member if a joint venture, and subcontractors, presently have no interest and will acquire no interest, direct or indirect, in the Project that would conflict in any manner or degree with the performance of the Work under this Contract. Contractor further warrants that in the performance of this Contract, no person having any such interest will be employed.

13. Furthermore, if any federal funds are to be used to compensate or reimburse Contractor under this Contract, Contractor represents that it is in compliance with federal restrictions, and promises to remain so, including federal restrictions on lobbying set forth in § 319 of the Department of the Interior and Related Agencies Appropriations Act for Fiscal Year 1990, 31 USCS 1352, and related rules and regulations set forth at 54 Fed. Reg. 52,309 ff. (1989), as amended. If federal funds are to be used, Contractor must execute a Certification Regarding Lobbying, which is contained in the EDS attached to this Contract as an exhibit.

IV. PROPERTY

A. Ownership of Property

The City will be the owner of the Work, including any improvements, equipment and fixtures installed or constructed by Contractor, as part of the Project or for which the City has paid Contractor to store in anticipation of installation or construction. The City's title shall be free and clear of liens, claims, security interests or other encumbrances, upon the earlier of installation, payment therefore or Final Completion of the Project; provided, however, that transfer of title to the City shall not relieve Contractor of any of its responsibilities under this Contract with respect to Work in Progress. Nor will the transfer of title constitute acceptance of any portion of the work.

B. Ownership of Detailed Specifications and Other Contract Documents

1. The Detailed Specifications**,** plans and any copies of them furnished by the Commissioner are the property of the City. They are not to be used on other work. The City will provide you the number of Detailed Specifications and plans determined appropriate by the City. The City may provide you with additional copies at your request and at your cost. You are responsible for any loss or damage to the Detailed Specifications and plans while in your care and custody, and you must restore all

Detailed Specifications and plans that may be lost or damaged. Contract documents will be furnished as follows:

Contract Plans	10 Sets
Subsequent Details	10 Sets
Specifications and Contract Documents	10 Sets

2. You must obtain specifications issued by organizations other than the City to which reference is made in the City's documents at your own expense. You must also retain them at the Work site and make them accessible to the Commissioner.
3. The City is the owner of the Project. All documents, data, studies, reports, and instruments of service prepared for or by the City under this Contract are the property of the City. During the performance of your Work, you are responsible for any loss or damage to documents while in your possession or the possession of a Subcontractor and you must restore any such document so lost or damaged at your expense.

   You must deliver, or cause to be delivered, at any time during the term of this Contract, all documents, including drawings, models, specifications, estimates, reports, studies, maps, and computations, prepared by or for the City, under the terms of this Contract to the City, promptly upon reasonable demand for them or upon termination of the Work. If you fail to deliver them when required, then you must pay the City all damages the City may sustain by reason of the failure, including consequential damages.

C. Right of Entry

1. You, and any of your officers, employees, agents, and Subcontractors, are permitted to enter upon any part of the Work site owned by the City in connection with the performance of the Work under this Contract, subject to the terms and conditions contained in this Contract and those rules that may be established by the Commissioner. You must provide advance notice to the City of any such intended entry. Consent to enter upon all or any part of the Work site given by the City will not create, nor be deemed to imply the creation of, any additional responsibilities on the part of the City.
2. Inspections: You acknowledge that the City has a right of access to the Work site at all times and the right to inspect all Work during the Contract period.
3. You must use, and must cause each of your officers, employees, agents, and Subcontractors to use, the highest degree of care when entering upon property owned by the City in connection with the Work. In the case of any property owned by the City, or property owned by and leased from the City, you must comply and must cause each of your officers, employees, agents, and Subcontractors to comply, with all instructions and requirements for the use of the property, including any licenses for them, which are incorporated by reference. All claims, suits, judgments, costs, or expenses, including reasonable attorneys' fees, arising from, by reason of, or in connection with any such

entry is treated in accordance with the indemnification provisions contained in this Contract.

D. Damage to City Property

If you cause damage to City property, you must, at the sole option of the City, either: (i) pay the cost of repair of the damage; or (ii) repair or replace any property so damaged. The City has the right to a set-off against its payments to you under this Contract for the cost of any such repairs. All cost to repair or replace any property so damaged will be completed before any final payment can be made to you by the City.

E. Right to Occupy Before Substantial Completion

1. The City may occupy and use the Project or portions of it in advance of Substantial Completion of the Work. If the City desires to exercise partial occupancy and use before Substantial Completion of the Work, the Commissioner will provide written notice to you, and you must cooperate with the Commissioner in making available for the City's use such Project services as heating, ventilating, cooling, water, lighting and telephone for space or spaces to be occupied, and if the equipment required to furnish the services is not entirely completed at the time the City desires to occupy and use the space or spaces, you must make every reasonable effort to complete that Work.
2. When the Commissioner determines that the City will use all or part of the Project before Substantial Completion, the Commissioner will determine:

    a. The responsibility between the City and you for maintenance, repair, furnishing of utilities and the protection of the public (if required) for that part of the Work to be occupied;

    b. The list of items remaining to be performed before the Work or portion of it to be occupied will be substantially complete;

    c. Whether you will need any types of insurance; and

    d. The effect of the City's use before Substantial Completion on required guarantees and warranties.

F. Final Completion and Acceptance of the Work

When you deem the Work to be complete, you must notify the Commissioner, in writing, that the Work will be ready for an inspection and/or test on a date you specify. The notice must be given at least 15 calendar days in advance of the date. If the Commissioner concurs that the Work will be ready for inspection or testing on the date given, the Commissioner will make the inspection within a reasonable period of time. The scheduling of the inspection to determine whether the Work is complete does not relieve you of your responsibilities under the Contract. You must cooperate in all respects in the scheduling and performance of the inspection.

Final Completion and Acceptance of the Work will occur only after the Commissioner determines that all Work, including Punch List Work, is complete and you submit to the

Commissioner, within 180 calendar days or sooner from the Substantial Completion Date, a sworn affidavit stating the following:

1. All payrolls, invoices for materials and equipment and all other indebtedness connected with the Work for which the City might in any way be responsible have been paid or otherwise satisfied;
2. All waivers of lien required by the Contract have been provided to the Commissioner;
3. As of the date the affidavit is signed, all known claims made by Subcontractors of any tier and others against you, the City, any agents or representatives of the City pertaining to the Work required under this Contract were provided in writing to the Commissioner and have been resolved;
4. The warranties and guarantees required by the Contract have been provided to the Commissioner;
5. All warranties and guarantees are in full force and effect;
6. The surety's written consent, signed by its authorized representative, to final payment being made directly to you is attached to the affidavit;
7. Acceptance of final payment will constitute a general release to the City, its agents, representatives, officials and employees of all other claims of liability for anything done or furnished or relating to the Work or for any act or neglect of the City or its agents, representatives, officials and employees relating to or connected with this Contract;
8. Record Documents, including Record Drawings, Record Shop Drawings and operation and maintenance manuals have been provided to the Commissioner;
9. All other documents requested by the Commissioner have been provided; and
10. Wages paid and classifications for laborers and mechanics, including apprentices and trainees employed on the Project, in the following form:

FINAL CERTIFICATE

The undersigned, Contractor on _____ (Specification No: /Contract No._____) certifies that all laborers, mechanics, apprentices and trainees employed by it or by a Subcontractor performing Work under the Contract have been paid wages at rates not less than those required by the Contract provisions, and that the Work performed by each such laborer, mechanic, apprentice or trainee conformed to the classifications set forth in the Contract or training program provisions applicable to the wage rate paid.
Signature and Title

_____ _____
Name *Title*
Authorized Officer
Contractor: _____
Project: _____

V. SHOP DRAWINGS, PRODUCT DATA, RECORDS AND SAMPLES

A. Contractor's Responsibilities and Submittal Procedures

1. Shop Drawings, Product Data, Samples are part of the Work under this Contract, and if also specified, video tape and/or photographs. You must provide them at your expense to the satisfaction of the Commissioner.

2. You must submit to the Commissioner those Shop Drawings, Product Data, Samples, video tape and photographs required for the Work involved under this Contract in accordance with the Schedule.

3. The Schedule must include a schedule of proposed submittal dates. The dates listed in the Schedule must allow sufficient time for review and processing of Shop Drawings or other data by the City and your re-submittal of them, if necessary, before you will need them to complete your performance of the Work they represent under this Contract. No extensions of time will be granted to you because of your failure to have Shop Drawings, Product Data, Samples, video tape and photographs submitted in time to allow for review, re-submittal and final review. You must also submit a separate submittal schedule (in table format), in addition to the Schedule, identifying all Submittals with submittal dates to the Commissioner for review and approval.

   In preparing the Schedule, you must allow 28 days for review and 14 days for processing into and out of the office. Every reasonable effort will be made by the Commissioner to hold to the time for normal submittals.

4. You must prepare and submit proper Shop Drawings, Product Data, Samples, video tape and photographs in accordance with your contractual obligations. By submitting them, you represent that you have determined and verified all materials, field measurements, field conditions and quantities, and that you have checked and coordinated the information contained within the Submittal, including your Subcontractors' Submittals, with the requirements of the Work and of the Contract.

5. You must date and stamp all Shop Drawings, Product Data, Samples, video tape and photographs. You must also indicate on them that you have reviewed and checked them before submission and found to be in conformance with the Contract. All Submittals must be transmitted to the Commissioner. You must clearly mark each Shop Drawing, Video Tape, Product Data and Sample, in accordance with the following for purposes of identification and record:

SUBMITTAL IDENTIFICATION

Name of Project:: _____

Contract Name and Number: _____

Date of Submittal: _____

Submittal Number: _____

Re submittal of Submittal Number: _____

Identification of Deviations from Contract documents: _____

Specification Section, Page, and Paragraph No. and/or Drawing No.: _____

Type of Material and Manufacturer: _____

Intended use: _____

Applicable Standards such as ASTM numbers: _____

CHECKED AND SUBMITTED IN ACCORDANCE WITH DRAWINGS AND SPECIFICATIONS.

Contractor: _____

By: _____ *Date:* _____

6. Shop Drawings must be submitted with accurate dimensions. The Shop Drawings must represent the actual manner in which the Work is manufactured and installed, and the relation of the Work installed to that of other trades, clearances, and all other pertinent data. Cross-section drawings must indicate minimum clearances and all other pertinent data. Dimensions must be expressed in feet and inches. Designs prepared in the metric system may be submitted with metric units, but the equivalent English units must also be shown. All weights and dimensions must be certified before submission for review.
7. The Commissioner's review and acceptance of Shop Drawings in no way relieves you from responsibility for errors or omissions that may exist in the Work or on the certified Shop Drawings. Where such errors or omissions are discovered, you must correct them at no additional cost to the City. Submittals must be sufficiently complete to allow for

proper review. You must submit all Shop Drawings, Product Data, Samples, video tape and photographs to the Commissioner for review with an accompanying transmittal letter containing the above Submittal identification data and a list of items being submitted. You must coordinate Submittals into logical groups or sets to facilitate review of several related items.

8. Any Submittal that in the Commissioner's sole opinion is not complete and in proper form will be returned to you without review. You must not submit as Shop Drawings duplicates or reproductions of any Contract documents issued by the City.

9. You must provide Submittals in the following quantities unless a greater number is specified elsewhere in the Contract or is required by the Commissioner:

    a. Shop Drawings: Submit one reproducible transparency and six opaque copies of shop drawings;

    b. Product Data: Submit six copies of Product Data;

    c. Samples: Submit four samples; and

    d. Video and photographs (when required under the Contract): Submit two copies of Video and photographs.

10. Before submitting Shop Drawings, Product Data, Samples, video tape and photographs, you must notify the Commissioner in writing of any deviations in the Submittals from the requirements of the Contract. If deviations from the Contract requirements are rejected by the Commissioner or if evaluation of the deviations delays the progress of Work, any delay caused will not be compensable by a time extension.

B. Review by the Commissioner

1. Submittals will be reviewed by the Commissioner for compliance with the Contract. In reviewing them the Commissioner will not verify dimensions and field conditions. Any such review does not relieve you, your Subcontractor, manufacturer, fabricator or supplier from responsibility for any deficiency that may exist or from any departures or deviations from the requirements of the Contract, nor does it relieve you or them from responsibility for (i) errors of any sort in Shop Drawings, Samples and Product Data, (ii) responsibility for proper fitting of the Work, or (iii) the necessity of furnishing any Work required by the Contract that may not be indicated on Shop Drawings when reviewed. You are solely responsible for any quantities that may be shown on the Shop Drawings. The Commissioner's review of a specific item does not indicate approval of an assembly of which the item is a component.

2. You must not fabricate products, begin Work, order or have delivered any material, equipment or system that requires a reviewed Submittal until return of the Submittal from the Commissioner with a stamp authorizing Work and/or delivery and installation to be performed, as described in Section V.B.3, immediately below.

3. The Commissioner will return Submittals stamped as follows:

    a. "No Exceptions" means no changes need be made on the reviewed Submittal. You may proceed with the Work for that Submittal.

b. "Exceptions as Noted" indicates that the Submittal is accepted subject to the corrections and/or comments noted. You may proceed with the Work for that Submittal but only if you incorporate the Commissioner's comments, and/or corrections. Re-submittal is not required, but the corrections must be reflected in the Record Documents.

c. "Revise and Resubmit" means that the Submittal does not meet all the requirements necessary to proceed with the Work associated with the Submittal. You must resubmit in accordance with the reviewer's comments and/or corrections. Submittals marked in this manner must not be released for fabrication, delivery or construction.

4. If the Submittal requires revision, you must notify the Commissioner and all pertinent Subcontractors, in writing, that the reviewed set has been withdrawn.

5. Submittals that require revisions must be corrected and resubmitted to the Commissioner to maintain the approved CPM schedule, but in no event more than five days after receipt of the Commissioner’s comments.

6. Shop Drawings: After review by the Commissioner, one reproducible stamped by the Commissioner as previously described in Section V.B.3 above will be returned to you.

7. Submission and Review of Samples: If a considerable range of color, graining, texture or other characteristics may be anticipated in finished products, you must furnish a sufficient number of Samples of the specified materials to indicate the full range of those characteristics that will be present in the finished products. Any product delivered or erected without submission and review of full-range Samples is subject to rejection. Each tag or sticker must have clear space for your stamps and those of the Commissioner. Notice of the result of the review will be provided to you with one of the stamps indicated in Section V.B.3 above. Rejected samples will be returned. Accepted samples will be retained by the Commissioner and become the property of the City. Where color samples are required to be submitted, color samples must be submitted in the actual material that will finally be installed in the Work. The various parts of the Work must be in accordance with the reviewed and approved Samples.

8. Product Data: After review by the Commissioner, two sets of Product Data stamped by the Commissioner as previously described will be returned to you.

C. Source of Materials

You must notify the Commissioner in writing as soon as possible after the Contract has been awarded, but not less than three weeks before the need for inspection and testing of the source (or sources) from which you expect to obtain the various construction materials. The source of supply of each material used must be approved by the Commissioner before delivery is commenced. If sources previously approved are found to be unacceptable at any time and fail to produce materials satisfactory to the Commissioner, you must furnish materials from other approved sources.

D. Record Documents

At Substantial Completion, you must deliver to the Commissioner, in suitable transfer cases clearly marked "Record Documents," all Record Drawings, Record Shop Drawings, warranties and guaranties, photographs, video Records (if any are required), Product Data, instructions, parts list, and operations and maintenance manuals arranged in proper order and indexed.

E. Record Drawings

1. As the Work progresses, you and the Subcontractor for each trade or division of work, under your direction must keep a complete and accurate record of the following:

    a. Changes between the Work as shown on the Contract drawings and the Shop Drawings indicating the Work as actually installed;

    b. The specific location of all infrastructure elements, including piping, valves, ductwork, equipment, driveways, catch basins, sewer lines, waterlines, water mains, and other such elements that were not accurately located or changed location or elevation from that shown on the Contract drawings; and

    c. Equipment schedules indicating manufacturers' names and model numbers installed.

2. You must record changes neatly and correctly daily on blue line prints of the Contract drawings updated daily. You must keep this record set of Contract drawings at the job site for inspection by the Commissioner. Upon completion of the Work, you must submit a final set of full-size prints to the Commissioner for review and acceptance.

3. At the time Record Drawings are delivered to the Commissioner, you and each Subcontractor must certify, in writing, that the Record Drawings are complete and accurate.

F. Record Shop Drawings and Product Data

1. As the work progresses, you must keep a complete and accurate record of the changes and deviations from the Work as shown on the Shop Drawings and Product Data indicating the Work performed. You must furnish Record Shop Drawings in a form and quantity acceptable to the Commissioner. Record Shop Drawings must be submitted for all items reviewed as Shop Drawings. Record Shop Drawings must be legibly drawn on sheets of Mylar or such other medium as directed by the Commissioner. Record Shop Drawings must be submitted on the same size sheets as the Contract Document drawings and include an index of all items.

2. You must furnish six record copies of Product Data in loose leaf binders. Loose leaf binders must be subdivided by Submittal numbers and must contain an index of all items.

G. Construction Progress Photographs

You must submit to the Commissioner construction progress photographs consisting of exterior and interior views of the Work, with the date and location of the photographs as selected and directed by the City. If requested at any time by the Commissioner, you must use digital photography, at the resolution specified by the Commissioner. You must provide three prints of each view to the Commissioner within five days of taking the photographs. If digital photography is not requested or until it is requested, then you must provide each photograph on an 8" x 10" smooth surface, glossy, black and white print, on single-weight commercial-grade stock. The 1" wide margin, which is punched for a standard 3-ring binder, will have a left-sided margin for vertical shots and a top-sided margin for horizontal shots. A label will be included on the on the front bottom margin, which will contain the project name and date that the photograph was taken. On the back of each print, you must provide an applied label or rubber stamp impression with the following information:

1. Name of the Project;
2. Name and address of the photographer;
3. Name of the Architect ;
4. Your name;
5. Date the photograph was taken;
6. Description of vantage point , in terms of location, direction (by compass point), and elevation or level of construction.
7. Notation of vantage point marked for location and direction of shot on a key plan of the site and building, with elevation (story height) noted.

The photographs must be taken monthly, coinciding with the cutoff date associated with each application for payment. From time-to-time the City may issue a request for additional photographs, in addition to the periodic photographs specified. Additional photographs are not included in the Contract Price and will be paid for by Change Order.

H. Instructions, Parts List and Operation and Maintenance Manuals

You must furnish a complete list of equipment actually installed. The list must include a copy of pertinent nameplate data, name and address of local representative who stocks or furnishes repair or replacement parts, and name, address, and telephone number of the Subcontractor responsible to you for the equipment under the guarantee. You must guarantee any such equipment with respect to the City.

You must submit suitable operating instructions for each major component of equipment and its controls. Instructions must include a schematic diagram accurately showing equipment and controls as installed. Included with each diagram must be a set of simple operating instructions stating how the system is stopped and started, what adjustments are to be made by the operator, and what to do in case of an emergency. Five copies of proposed instructions must be submitted to the Commissioner for review and acceptance. Upon acceptance, you must post applicable instructions as directed by the Commissioner.

You must submit maintenance data prepared by the manufacturer of each major component of equipment and its controls. Data must include complete parts list, itemized lists of common purchase items of materials (e.g., bearings, packing, connectors, sealing devices, and other standard items) indicated by their standard trade designation, recommended routine and inspection maintenance, including testing recommendations to evaluate efficiency of performance, lists of special tools and gauges, lubricating instructions, and recommended spare parts lists, tolerances and clearances required for maintenance, and trouble-shooting guides prepared in a simple format to indicate complaint or problem, probable cause, and remedy. You must submit five copies of the proposed maintenance data to the Commissioner for review and acceptance in accordance with Article XV.

I. Adjustment of Equipment

Before the Work is turned over to the City, you must furnish the necessary instruments, test equipment, services, and personnel required to adjust and balance each piece of equipment in order to provide a smoothly functioning, well-integrated system complying with the letter and intent of the Contract.

J. Project Account Records

1. Project Data and Records

   a. You and each Subcontractor must keep an accurate record showing the names, occupation, and the actual hourly wages paid to all laborers, workers and mechanics employed by them in connection with the Work. The record must be open at all reasonable hours to the inspection of the Commissioner and to the Director of Labor of the State of Illinois and his deputies and agents. You also must furnish the Commissioner and the Chief Procurement Officer with certified copies of the payrolls, in accordance with Section XIII.B.3.d.

   b. You must furnish to the Commissioner upon request a written statement, verified by affidavit, giving the names and addresses of all persons, firms and corporations who have up to that date furnished labor or materials in the performance of the Contract and the amounts due or to become due them.

   c. You and all Subcontractors must furnish the Commissioner with such information as the Commissioner may require relating to labor and materials, including all information necessary to determine the cost of the Work, such as the number of workers employed, their pay, the distribution of labor into Work items, equipment time distribution and any other information that the Commissioner may require. You must, on request, furnish the Commissioner with copies of delivery tickets and invoices, in triplicate, covering the expenditures on the Contract.

2. Audits

   a. You and your Subcontractors must furnish the Commissioner such information as he may request regarding the progress, execution, and cost of the Work. You must maintain complete records showing actual time devoted and costs incurred, adopting accounting procedures and practices sufficient to record properly all costs of

whatever nature claimed to have been incurred and anticipated to be incurred for or in connection with the Work. This system of accounting must accord with generally accepted accounting principles and practices, consistently applied throughout. You must maintain its books, records, documents and other such evidence for five years after final payment.

b. All books and accounts you and your Subcontractors are required to keep in connection with the Work under this Contract must be open to inspection and audit by authorized representatives of the City at reasonable times during the performance of the Work, and they must be retained in a safe place and available for inspection and audit during the five-year period after final payment, as provided above. No provision in this Contract granting the City a right of access to records and documents is intended to impair, limit, or affect any right of access to such records and documents that the City would have had in the absence of such provisions.

c. If the City, in its sole discretion, chooses to conduct an audit either during the performance of the Work or in the five-year period after final payment, each audited calendar year or partial calendar year is considered an "audited period." If, as a result of such an audit, it is determined that you or any of your Subcontractors have overcharged the City in the audited period, the City will notify you. You must then promptly reimburse the City for any amounts the City has paid you due to the overcharges and also some or all of the cost of the audit, as follows:

    (i) If the audit has revealed overcharges to the City representing less than 5% of the total value, based on the Contract Prices, of the goods, work, or services provided in the audited period, then you must reimburse the City for 50% of the cost of the audit and 50% of the cost of each subsequent audit that the City conducts;

    (ii) If, however, the audit has revealed overcharges to the City representing 5% or more of the total value, based on the Contract Prices, of the goods, work, or services provided in the audited period, then you must reimburse the City for the full cost of the audit and of each subsequent audit.

d. Your failure to reimburse the City in accordance with V.J.2.c above is an event of default under this Contract, and you will be liable for all of the City's cost of collection, including any court cost and attorneys' fees.

3. Confidentiality

All of the reports, information, or data, prepared or assembled by or provided to you under this Contract are confidential and except as specifically authorized in this Contract or as may be required by law, you must not make available the reports, information, or data, to any other individual or organization, without the prior approval of the Commissioner. This requirement will survive expiration or termination of this Contract.

4. Electronic Records

Upon request by the Commissioner, Contractor shall provide the City electronic versions of any hard-copy record documents that the Contractor is required to prepare by the Contract.

VI. ASSIGNMENT

A. Assignment of Contract by Contractor

You must not assign the Contract, in whole or in part, without the prior written consent of the Chief Procurement Officer. The consent of the Chief Procurement Officer will not relieve you from any obligations under this Contract, or in any other way change the terms of this Contract.

B. Assignment of Funds or Claims by Contractor

You must not transfer, pledge or assign any Contract funds or claims due or to become due without the prior written consent of the Chief Procurement Officer. The transfer, pledge or assignment of any Contract funds, either in whole or in part, or any interest in the Contract funds, that are due or to become due to you, without the prior written consent of the Chief Procurement Officer, is void with respect to the City.

C. Assignment of Contract by City

The City reserves the right to assign or otherwise transfer all or any part of its interests under this Contract without your consent or approval.

D. Assigns

All of the terms and conditions of this Contract are binding upon and inure to the benefit of the parties to it and their respective legal representatives, successors, transferees, and assigns.

E. Requests to Subcontract

All requests to subcontract must be accompanied by three copies of a written subcontract agreement that sets forth the scope of services to be subcontracted, the lump sum or unit price for the services and the signature of the subcontracting parties. Proposed Subcontractors must not commence Work on any portion of the Project without prior written approval by the Chief Procurement Officer.

VII. QUALITY OF WORKMANSHIP, EQUIPMENT AND MATERIALS

A. Standard of Performance

In addition to performing the Work in full compliance with the Contract you must perform, or cause to be performed, all Work required of you under the terms and conditions of this Contract with that degree of skill, care, and diligence normally exercised by qualified and experienced contractors in performing work in projects of a scope and magnitude comparable to the Work.

B. Correction of Work

1. You must, upon discovery of any defective or non-conforming Work, or when directed in writing by the Commissioner, promptly re-perform, correct or remove all Work identified to be defective or as failing to conform to the standards set forth in, or any requirement of the Contract, whether or not completed. You must bear all costs of correcting the defective or non-conforming Work, including costs associated with removing any defective or non-conforming Work, replacing the defective or non-conforming Work with non-defective, conforming Work and any compensation for any additional equipment, materials and/or services made necessary by the removal and replacement.

2. If you do not proceed with re-performance, correction or removal of the defective or non-conforming Work after written notice from the City within the time period designated by the notice, the City may correct or remove it and may store the materials and/or equipment at your expense, then complete the corrective Work. If you do not pay the costs incurred for the removal, storage and correction within 10 days after you receive written notice from the City of the amount of the costs, the City may upon 10 additional days' written notice, sell any such materials and/or equipment at an auction or at a private sale and will account for the net proceeds, after deducting all the costs you are required to bear, including compensation for the City's services. If the proceeds of sale do not cover all costs for removal and correction of the Work, the difference will be charged to you with a deduction of any amounts due you, and an appropriate Contract modification will be issued. If later payments due you are not sufficient to cover the amount, you must pay the difference to the City, or the City may deduct the amount from any other funds due to you, including any amounts due under any other contract between City and you.

3. You must not perform any work without lines and grades or beyond the lines shown on the drawings or outside the scope of the Contract, without the prior written consent or direction of the City. It is not authorized, and if you do so you perform it at your sole expense. Upon direction of the City, work so done must be removed or replaced and those areas restored to their previously existing state at your sole expense.

4. Neither the determination of Final Completion and Acceptance of the Work, nor payment, nor any provisions in the Contract will relieve you of responsibility for defective or non-conforming Work, faulty materials, equipment or workmanship, and unless otherwise specified, you must remedy any defects due to the foregoing and pay for any damage to the Work or other property resulting from defective or non-conforming Work, or faulty materials, equipment or workmanship throughout the Warranty Period, as defined in Section VII.E, “Warranties,” below, or such other period of time afforded by industry custom or law, whichever is longer. The City will give you written notice of the observed defects with reasonable promptness.

C. Materials and Equipment

1. Quality of Materials. Unless otherwise specified in the Contract you must use all new materials for the Project and use them in such a manner as to produce completed Work that conforms with the Contract and is acceptable in every detail to the Commissioner. Only materials that conform to the requirements of these specifications may be

incorporated or used in the Work. In the absence of a definite specification, materials must be the best of their respective kind with properties best suited to the Work required.

2. Materials Inspection and Responsibility. Before any material is incorporated into the Work, you must submit a "Request for Materials Inspection" to the Commissioner. You are solely responsible for submitting the requests with sufficient time for the City to conduct its inspection. You are not entitled to payment for uninspected materials. The City has the right to inspect any material to be used in carrying out this Contract. The City does not assume any responsibility for the availability of any materials or equipment required under this Contract. By performing any tests or accepting any materials, the City in no way relieves you of any of your obligations or responsibility under this Contract. Materials, components or completed Work that do not comply with the Detailed Specifications and other requirements of this Contract may be rejected by the City, and you must replace them at no additional cost to the City. After you receive notice from the City that materials or components have been rejected, you must promptly remove them from the City's premises at no additional cost to the City.

D. Substitution of Materials

1. The City will consider your request for substitution in cases of product unavailability or other conditions beyond your control.
2. You must submit each request for substitution separately and each must include:
    a. Complete data substantiating compliance of proposed substitution with requirements stated in the Contract;
        (1) Product identification, including manufacturer's name and address
        (2) Manufacturer's literature identifying:
            (a) Product description
            (b) Reference standards
            (c) Performance and test data
        (3) Samples, as applicable
        (4) Names and address of similar projects on which the product has been used, and date of each installation;
    b. Itemized comparison of the proposed substitution with product specified that lists significant variations;
    c. Data relating to changes in the Schedule;
    d. Any effect of substitution on other parts of the Work, any Subcontractors, or any separate contracts;
    e. List of changes required in other Work or products;
    f. Accurate cost data comparing proposed substitution with product specified, including the amount of any net change to Contract Price;
    g. Designation of required license fees or royalties; and

h. Designation of availability of maintenance services, sources of replacement materials.

3. When you make a formal request for substitution make you are warranting and representing that:

   a. The proposed substitution is equivalent to or superior in all respects to the product specified;

   b. The same warranties and guarantees will be provided for the substitute as for the product specified; and

   c. You will coordinate the installation of accepted substitutes into the Work and will make such changes as may be required for the Work to be complete in all respects.

4. If evidence you present does not, in the sole opinion of the Commissioner, provide a sufficient basis for reasonable certainty that the proposed substitution or deviations will provide a quality, result, function, and esthetic appearance, among other attributes, at least equal to that attainable by the specified product, the Commissioner may reject the substitution or deviation without further investigation.

5. The Commissioner will judge the design and appearance of proposed substitutes on the basis of their suitability in relation to the overall design of the Project, as well as for their intrinsic merits. The Commissioner will not approve proposed substitutes as equal to items specified that, in the Commissioner's opinion, would be unharmonious, or otherwise inconsistent with the character, quality or design of the Project.

6. You must bear any additional cost, or any loss or damage, arising from the substitution of any material or method for those specified, including the cost for damages incurred by other contractors notwithstanding approval or acceptance of the substitution by the Commissioner, unless the substitution was initiated by the written request or direction of the Commissioner.

7. The investigation review and approval of substitute materials requires a minimum of 30 days beyond that required for specified routine items. No request for a delay or disruption will be allowed whether or not the substitution is granted.

8. Approval by the Commissioner of a substitution of material will be given in a Contract modification as required in Article XIV, "Changes in the Work."

E. Warranties

This Section (E) shall not apply to work performed on National Highway System routes. To the extent this project involves work on non-National Highway System routes, You warrant all Work furnished under this Contract against defective materials and workmanship, improper performance and non-compliance with the Contract for a period of one year after the date of Final Completion and Acceptance of the Work ("Warranty Period"), except as otherwise specifically stated in other parts of the Contract or within such longer periods of time as may be provided by law or by the manufacturer, which periods will then become the Warranty Period as applicable. Your warranty will be in addition to any Manufacturers' Warranties.

1. Your written warranty will include the name of the project as designated in the Contract, be signed by an officer of the company having authority to provide the warranty, and state: “This document serves as a one - year written warranty for the Work performed, and material and equipment installed on the above referenced project. This warranty incorporates all provisions of the Contract that refer or relates to the warranty. This warranty begins on (date) .”
2. Contractor’s Warranty Obligations:
    a. During the Warranty Period, you must repair and replace at your own expense, when so ordered by the Chief Procurement Officer or the Commissioner, all Work that may develop defects whether these defects may be inherent in the equipment or materials, in the functioning of the piece of equipment, or in the functioning and operation of pieces of equipment operating together as a functional unit. Any equipment or material that is so repaired or replaced will have the Warranty Period extended for a period of one year from the date of the last repair or replacement.
    b. You must bear all costs associated with any repair or replacement under this section, including removal, material, transportation, and reinstallation.
3. Manufacturer’s Warranties
        a. You must:
            (1) ensure that all required Manufacturer’s Warranties pass through to the City and the Department;
            (2) submit all applicable manufacturers’ warranties to the Commissioner and ensure that all warranty forms have been completed in the Department’s name and registered with the appropriate manufacturers.
        b. Whenever you make repairs or provide replacements under Section VII.E.3, you must provide a manufacturer’s warranty for the repaired or replaced Work, if standard with the manufacturer, in addition to your warranty under Section VII.E.2.

VIII. PERSONNEL

A. Competency of Workers

You must employ only competent and efficient laborers, mechanics or artisans on the Work, as demonstrated by completion of a specific training program or demonstrated project experience. Whenever, in the opinion of the Commissioner, any worker is careless, incompetent, violates safety or security rules, obstructs the progress of the Work, acts contrary to instructions or acts improperly, or fails to follow the safety requirements of this Contract, you must, upon request of the Commissioner, remove the worker from the Work. You must not permit any person or worker to enter any part of the Work or any buildings connected with it who is under the influence of intoxicating liquors or controlled substances.

B. Supervision and Superintendence

While Work is in progress, either by your labor force or that of your Subcontractor, you must have a full-time, experienced and qualified superintendent assigned to the Work. You must superintend the Work and must have a competent superintendent at the job site at all times with authority to act for you as the contact person with the Commissioner.

C. Contractor's Project Personnel

No separate payment will be made to you for the cost of personnel. Those costs must be included in the Contract Price.

D. Key Personnel

Upon award of the Contract, you will submit a project staff organization chart that includes the names and resumes of employees in key positions for this project. All employees in key positions must be approved by the Commissioner.

You must employ and assign to work on this Contract a qualified engineer as a project manager with a valid Professional Engineer's License in the State of Illinois, satisfactory to the Commissioner, to act as a contact person with the Commissioner and a Registered Land Surveyor to set and maintain the lines and grades necessary for the proper performance of the Work under this Contract.

Changes in the assignment of any key personnel due to commitments not related to this Contract are prohibited without Commissioner's approval. If any key personnel, selected in accordance with the key personnel provisions under this section of the Contract, should become unable to continue in the performance of the assigned duties for reasons due to death, disability or termination, you must promptly notify the Commissioner and explain the circumstances.

Under a request by Commissioner, you must provide to the Commissioner, within seven days, the name of the person substituting for the individual unable to continue, together with any information the Commissioner may require to judge the experience and competence of the substitute person. Upon approval by the Commissioner, the substitute person will be assigned to the project. If the Commissioner rejects the substitute, you will have seven days after that to provide the name a second substitute person, with any information the Commissioner may require, until a proposed replacement has been approved by the Commissioner.

E. Davis-Bacon Prevailing Wages

The Contractor agrees to comply and assures compliance with the requirements of 49 U.S.C. 5333(a), the Davis-Bacon Act, 40 U.S.C. 276 a(7), and implementing U.S. DOL regulation, "Labor Standards Provisions Applicable to Contracts Governing Federally Financed and Assisted Construction (also Labor Standards Provisions Applicable to Nonconstruction Contracts Subject to the Contract Work Hours and Safety Standards Act)," 29 C.F.R. Part 5. In addition to other requirements that may apply, the Contractor agrees to pay wages to laborers and mechanics performing contract work at a rate not less than the minimum wages specified in a wage determination issued by the U.S. Secretary of Labor and not less frequently than once a week. The Contractor agrees to place a copy of the

current prevailing wage determination issued by the U.S. DOL in each solicitation for Subcontractor work under the Project, and agrees to refrain from awarding any affected subcontract until the subcontractor agrees to the required wage determination.

You must report to the FHWA every suspected or reported violation of the Davis-Bacon Act or its federal implementing regulations.

F. Copeland "Anti-Kickback" Act

You must comply with the Copeland "Anti-Kickback" Act, 18 USC § 847 and 40 USC § 276c and U.S. DOL regulations, "Contractors and Subcontractors on Public Building or Public Work Financed in Whole or in Part By Loans or Grants From the United States" 29 CFR Part 3. In additions to other requirements that may apply:

You must not induce, by any means, any person employed in the construction, completion, or repair of public work, to give up any part of the compensation to which that employee is otherwise entitled.

You must report every suspected or reported violation of the Copeland "Anti-Kickback" Act or its Federal Implementing regulations to the FHWA.

As a condition of making payment to you, the City may request you to submit an affidavit to the effect that not less than the prevailing hourly wage rate is being paid to laborers, mechanics, and other workmen employed on this Contract in accordance with applicable law.

G. Minimum Wage, Mayoral Executive Order 2014-1

Mayoral Executive Order 2014-1 provides for a fair and adequate Minimum Wage to be paid to employees of City contractors and subcontractors performing work on City contracts.

If this contract was advertised on or after October 1, 2014, Contractor must comply with Mayoral Executive Order 2014-1 and any applicable regulations issued by the CPO. The Minimum Wage to be paid pursuant to the Order as of July 1, 2016 is $13.15 per hour. The Minimum Wage must be paid to:

- All employees regularly performing work on City property or at a City jobsite.
- All employees whose regular work entails performing a service for the City under a City contract.

Beginning on July 1, 2015, and every July 1 thereafter, the hourly wage specified by the Executive Order shall increase in proportion to the increase, if any, in the Consumer Price Index for All Urban Consumers most recently published by the Bureau of Labor Statistics of the United States Department of Labor. Any hourly wage increase shall be rounded up to the nearest multiple of $0.05. Such increase shall remain in effect until any subsequent adjustment is made. On or before June 1, 2015, and on or before every June 1 thereafter, the City shall make available to City Concessionaires a bulletin announcing the adjusted minimum hourly wages for the upcoming year.

The Minimum Wage is not required to be paid to employees whose work is performed in general support of contractors operations, does not directly relate to the services provided to

the City under the contract, and is included in the contract price as overhead, unless that employee's regularly assigned work location is on City property or at a City jobsite. It is also not required to be paid by employers that are 501(c)(3) not-for-profits.

Except as further described, the Minimum Wage is also not required to be paid to categories of employees subject to subsection 4(a)(2), subsection 4(a)(3), subsection 4(d), subsection 4(e), or Section 6 of the Illinois Minimum Wage Law, 820 ILCS 105/1 et seq., in force as of the date of this Contract or as amended. Nevertheless, the Minimum Wage is required to be paid to those workers described in subsections 4(a)(2)(A) and 4(a)(2)(B) of the Illinois Minimum Wage Law.

Additionally, the Minimum Wage is not required to be paid to employees subject to a collective bargaining agreement that provides for different wages than those required by Mayoral Executive Order 2014-1, if that collective bargaining agreement was in force prior to October 1, 2014 or if that collective bargaining agreement clearly and specifically waives the requirements of the order.

If the payment a Base Wage pursuant to Municipal Code of Chicago Sect. 2-92-610 is required for work or services done under this Contract, and the Minimum Wage is higher than the Base Wage, then the Contractor must pay the Minimum Wage. Likewise, if the payment of a prevailing wage is required and the prevailing wage is higher than the Minimum Wage, then the Contractor must pay the prevailing wage.

Contractors are reminded that they must comply with Municipal Code Chapter 1-24 establishing a minimum wage.

H. "Living Wage"

1. Section 2-92-610 of the Municipal Code of Chicago provides for a base wage for certain categories of workers employed in the performance of City contracts, specifically non-City employed security guards, parking attendants, day laborers, home and health care workers, cashiers, elevator operators, custodial workers, and clerical workers ("Covered Employees"). Accordingly, pursuant to Section 2-92-610 and regulations promulgated thereunder:

    (a) if the Contractor has twenty-five (25) or more full-time employees, and

    (b) if at any time during the performance of the contract the Contractor and/or any subcontractor or any other entity that provides any portion of the Services (collectively "Performing Parties") uses twenty-five (25) or more full-time security guards, or any number of other full-time Covered Employees, then

    (c) the Contractor must pay its Covered Employees, and must assure that all other Performing Parties pay their Covered Employees, not less than the minimum hourly rate as determined in accordance with this provision (the "Base Wage") for all work performed pursuant to the Contract.

2. The Contractor's obligation to pay, and to assure payment of, the Base Wage will begin at any time during the Contract term when the conditions set forth in (a) and 1(b) above are met, and will continue thereafter until the end of the Contract term.

3. As of July 1, 2016, the Base Wage is $12.15 per hour. Each July 1st, thereafter the Base Wage will be adjusted, using the most recent federal poverty guidelines for a family of four (4) as published annually by the U.S. Department of Health and Human Services, to constitute the following: the poverty guidelines for a family of four (4) divided by two thousand (2000) hours or the current base wage, whichever is higher. At all times during the term of this Contract, Contractor and all other Performing Parties must pay the Base Wage (as adjusted in accordance with the above). If the payment of prevailing wages is required for work or services done under this Contract, and the prevailing wages for Covered Employees are higher than the Base Wage, then the Contractor must pay the prevailing wage rates.

   Note: As of July 1, 2016, the wage specified by Mayoral Executive Order 2014-1 is higher than the Base Wage rate. Therefore, the higher wage specified by the Executive Order (or other applicable rule or law) must be paid.

4. The Contractor must include provisions in all subcontracts requiring its subcontractors documentation acceptable to the Chief Procurement Officer demonstrating that all Covered Employees, whether employed by the Contractor or by a subcontractor, have been paid the Base Wage, upon the City's request for such documentation. The City may independently audit the Contractor and/or subcontractors to verify compliance herewith. Failure to comply with the requirements of this Section will be an event of default under this Contract, and further, failure to comply may result in ineligibility for any award of a City Contract or subcontract for up to three (3) years.

5. Not-for-Profit Corporations: If the Contractor is a corporation having Federal tax-exempt status under Section 501(c)(3) of the Internal Revenue Code and is recognized under Illinois not-for-profit law, then the provisions of Sections 1 through 4 above do not apply.

I. Working hours in city contracts

Eight hours constitutes a legal day's work under this Contract, in accordance with § 2-92-220 of the Municipal Code of Chicago.

IX. PERMITS AND LICENSES

A. Contractor Obtains Permits

Whenever the Work under this Contract requires permits to be obtained from the City or other public authorities, you must obtain them and furnish triplicate copies of the permits to the City before the Work covered by them is started. NO WORK IS ALLOWED TO PROCEED BEFORE SUCH PERMITS ARE OBTAINED.

The City will obtain permits required from the Metropolitan Water Reclamation District of Greater Chicago, the Illinois Division of Waterways and the U.S. Army Corps of Engineers.

B. Contractor Pays Permit Fees

The special use of, or removal, alteration or replacement of certain City-owned facilities and appurtenances such as traffic signs, parking meters, trees, sewers, hydrants, bridges and viaducts which are required for you to perform your Work are subject to all applicable Municipal Ordinances. It is your responsibility to obtain all the necessary permits and pay the associated fees. You must furnish copies of the permits to the City before the Work covered is started. Information with regard to the above may be obtained by contacting the appropriate City Departments.

C. Occupancy Placard and Fees

You must provide an occupancy placard indicating occupancy and floor plans based upon key plans provided by the Architect. It is your responsibility to pay all fees and expenses related to providing the occupancy placard.

X. COORDINATION WITH OTHER CITY DEPARTMENTS

A. Water System Work and Usage

If water from a City hydrant is necessary for the execution of the Work, you must obtain a hydrant permit from the City's Department of Water Management. You must obtain a permit from that department also for any construction, repair or adjustment of any water main, branch or service connection. Requests for permits must be made at the **Department of Water Management, City Hall, 121 North LaSalle Street, Room 906, Chicago, Illinois 60602; 312/744-7060.**

B. Sewer System Work

If you will be constructing, repairing, adjusting or cleaning any subsurface structure designed to collect or transport storm and/or sanitary waste water, either in private property or in the public way you, through a licensed drainlayer, must obtain a permit issued under this Section X.B. (A licensed drainlayer is a person possessing a current sewer and drain license issued by the Department of Water Management.) Requests for permits must be made at the **Department of Buildings, Sewer Engineers, Address: 121 N. LaSalle St., Room 906, Chicago, IL 60602; Telephone: 312-744-3351**.

Project plans must be submitted to the Department of Water Management (Sewers and Drains) sufficiently in advance for examination and review. Plans meeting the department's requirements must be submitted with the application for permit at least four days before the issuance of permit. When applying for a permit, you must submit three sets of plans that show all new underground sewer Work inside and around the project with a clear site or location plan together with the estimate of quantities for sewer sizes and sewer structures to be installed.

A copy of the permit must be on the Work site before the start of construction. Failure to obtain a permit before the start of construction will result in a penalty and could result in the revocation of the drainlayer's license.

You must arrange for sewer inspections at least 48 hours before the start of Work. Inspections may be requested by calling **(312) 743-7477 for Plumbing Inspections and (312) 744-5502 for Mason Inspections.**

C. Parking Meter Removal and Replacement

The City via the metered parking concessionaire shall close or remove and opened or reinstall any parking meters, including signs indicating pay boxes, as may be required. However, you must pay all fees and lost meter revenues required by § 9-68-050 of the Chicago Municipal Code. You must advise the Department of Transportation, Bureau of Inspections, Construction Compliance Section (Public Way Permits), Room 804, City Hall, Chicago, Illinois 60602, in writing at least two weeks in advance of the closure citing the location and meter number of the meters to be closed or removed. Closures of less than 6 hours on a given day and limited to less than 10 business days are strongly encouraged, and you must be prepared to detail any reason requiring closures of a longer hourly and daily duration.

You may not remove any parking meters without the express written consent of the Commissioner. If you violate this provision, you (a) recognize that the City will suffer damages as a result, including the costs incurred by the City in tracking, retrieving, and repairing damage to the parking meters, and (b) will be liable for liquidated damages in the amount of $350 for each single-space parking meter or $10,000 for each pay box you removed. All amounts, including any other debts, will be deducted from any amounts due or that may become due you.

Notification must be provided immediately once meters can be opened or reinstalled. That notification must be e-mailed to the Department of Revenue at parking-meter-closure@cityofchicago.org. Please include "REOPEN/REINSTALL" in the subject line and provide details concerning permit numbers, locations, and dates that the meters may be opened or reinstalled.

The City of Chicago Department of Transportation and the Department of Revenue may modify these requirements in the future.

D. Traffic and Parking Sign Removal and Replacement

The City will remove and re-install any traffic and parking sign(s) as may be required, however, you will be responsible for all fees relative to the removal and replacement of all of the City's traffic and parking signs. You must inform the Bureau of Signs and Markings, in writing, of the location of each sign to be removed and specify its distance from the property line of the nearest cross street. Each sign legend must also be stated. This information must be provided at least five days before removal. You must also inform the Bureau of Signs and Markings , in writing, of when signs may be reinstalled as soon as this date is known. Contact the **Bureau of Signs and Markings, 3458 S. Lawndale, Chicago, Illinois, 60623, Attn.: Deputy Commissioner, (312)747-2210.**

E. Trees

In accordance with § 10-32-060 *et seq*. of the Municipal Code, you must obtain a permit from the Bureau of Forestry when removing planting, trimming, spraying, or in any way affecting the general health or structure of trees in the public way. There is no fee for this permit. The permit must be obtained from the **Bureau of Forestry Permits Division; 2352 S. Ashland Av., Chicago, IL 60608 312-746-5254, fax 312-743-8030.**The Bureau of Forestry requires 48 hours' notice before starting Work for all activities with the exception of tree planting, which requires two weeks' prior notice. To obtain tree planting permits, two copies of the site plan must be presented to the Bureau for its review and approval. A Bureau representative must also assist in the selection of those trees to be planted in the public way. Tree planting standards and specifications are outlined in the Bureau of Forestry's "Manual of Tree Planting Standards," which is available upon request from the Bureau of Forestry.

F. Demolition

If demolition of a structure or removal of an underground storage tank is required during construction, you must obtain a permit and pay the required fee as set forth in the Municipal Code and its amendments to date. The permit must be obtained from the **Department of Buildings, City Hall, 121 North LaSalle Street, Room 900, Chicago, Illinois 60602; (312/744-3400).**

XI. SCHEDULE

A. Time

1. The date for commencement of the Work is the date set forth in the Contract or such other date as may be established at the discretion of the Commissioner in a Notice to Proceed. Within five calendar days after the award and release of the Contract, you must provide the Commissioner, a schedule for the performance of the Work, which complies in all respects with the Contract, within the Contract Time. The schedule may be used as a means of determining the progress of your performance of the Work, but neither the provision of the schedule to the City, nor the City's acceptance or use of the schedule, acts in any way to relieve you of any of your obligations under the Contract.

2. Progress and Completion. TIME IS OF THE ESSENCE IN THIS CONTRACT. No time extensions will be allowed unless they are contained in a Contract Modification that has been approved and executed by the City. Liquidated damages will be assessed against you for late completion of the Work and failure to achieve any milestone dates that provide for liquidated damages set forth in the Contract. You must not suspend any Work that may be subject to damage by climatic conditions without the Commissioner's prior written approval. Notwithstanding any other terms contained in this Contract, you must take measures to protect the Work and to minimize the impact of such conditions on the progress of the Work.

B. Progress Schedule

1. You must begin performance of the Work and to prosecute it with all due diligence, so as to complete the entire Work under this Contract within the Contract Time stipulated, after the date of commencement of Work, as specified in the written Notice to Proceed to you. The date for the commencement of Work is not counted as a day, but each day after that, from midnight to midnight, is counted as one day and the last day counted is the date of Final Acceptance and Completion of the Work. You must, when necessary, use overtime, multiple shifts, weekend and/or holiday work to maintain the approved schedule at no additional cost to the City.

2. Except when otherwise specified by the Commissioner, you must provide the progress schedule (“Schedule”) for the Work using the Critical Path Method ("CPM") as described in Section XI.D, “Critical Path Method Schedule,” below.

3. The Commissioner's approval of your Schedule is done for the sole purpose of insuring that all CPM scheduling documents you prepare are in conformance with the Contract requirements. This approval does not relieve you of the responsibility for the means, methods, procedures and sequence of the construction process nor does it entitle you to additional funds for completing Work in a period that is less than the Contract Time.

4. Daily Progress Reports: You and all Subcontractors must prepare and submit to the Commissioner daily progress reports on the various parts of the Work, including in the report the number of workers and the classification of the trades involved, equipment used and any pertinent information regarding possible delays in the Work.

C. Construction Operations Plan

1. You must, within 14 days after Notice to Proceed, submit to the Commissioner for review the order of procedure you propose to follow in performing the Work. Work begins only after your proposed order of procedure in performing the Work and the Schedule have been submitted to and consented upon by the Commissioner, in writing. You understand that a reasonable amount of time is required by the Commissioner for the examination of the procedure and Schedule. As Work progresses, changes or modifications in the procedure and Schedule, may be required by the Commissioner. In that event, upon notice from the Commissioner to you, further Work is performed only in accordance with the changed or modified procedure and Schedule as have been submitted to and consented upon, by the Commissioner, in writing.

2. The Commissioner, in his/her sole discretion, may reject or require modification of any proposed or previously approved order of procedure, that he or she considers to be unsafe for the Work under this Contract, or for other Work being carried on in the vicinity, or for other structures, or for the public, or for workmen, engineers and inspectors employed thereon, or that will not provide for the completion of the Work within the period of time specified in the Schedule, or that is contrary to any other requirement of this Contract.

3. The City’s acceptance or approval of any order or procedure or equipment that you submitted or employ does not in any manner relieve you of responsibility for the performance of the Work, or for the safety of the performance of the Work under this

Contract, or from any liability whatsoever on account of any procedure employed by you, or due to any failure or movement of any structure or equipment furnished by it. Notwithstanding any approval by the Commissioner, should any structure or equipment installed under this Contract afterwards prove insufficient in strength or fail in any manner whatsoever, the insufficiency or failure in no way forms the basis of any claim for extra compensation for delay, or for damages or expenses caused by the insufficiency or failure, or for an extension of time for completion of the Work, or for material, labor or equipment required for repairing or rebuilding the structure or equipment, or for repairing or replacing any other Work that may have been damaged by the movement or insufficiency or failure of any such structure or equipment, respectively.

D. Critical Path Method ("CPM") Schedule

1. You must format the Schedule to show the proposed starting and completion date for the various stages of the Work, including any float time, and must prepare it in such a way that it can be used to plot actual progress against proposed progress. You must update the Schedule and submit it to the Commissioner no less than monthly or as directed by the Commissioner. The Commissioner may request more frequent Submittals. Monthly payment will be withheld for failure to submit updated Schedules. One copy of the Schedule must be submitted to the Commissioner in a reproducible format. A copy of the Schedule must be submitted on a computer diskette in a format acceptable to the Commissioner.
2. You must assure that the Schedule includes, at a minimum:
    a. Project name, Contract number, Contractor's name, data date and plot date on each separate sheet. If multiple diagrams are prepared, each must, in addition to the above, include a descriptive title of that portion of the Work included in them.
    b. The order and interdependency of activities, indicating the sequence in which you plan to perform the Work; the Schedule must describe and indicate the critical path; and
    c. Estimates of man hours and/or crew sizes for each activity.
    d. The dates for:
        (1) starting and completing the various stages of the Work, including milestones identified by the City in the Contract;
        (2) placing material orders, fabrication and delivery of materials and equipment;
        (3) preparation, submittal and approval of all required submittals to the City;
        (4) procuring material and equipment furnished by the City;
        (5) interface activities performed by other contractors or Subcontractors upon which your Schedule depends;
        (6) all Work activities and field construction operations;

(7) equipment installation, testing and balancing.

3. For purposes of the Schedule, “activity” means each logically separate part of the Work defined by an observable start and an observable finish, subject to the following:

    a. To establish the scope of an activity for Schedule purposes, you must form a single activity from the largest grouping of related operations that permit a continuous and measurable flow of Work;

    b. The scope of an activity must be small enough to permit a reasonable appraisal of its status or as directed by the Commissioner;

    c. Each activity on the Schedule must be manpower loaded;

    d. The activities must be defined so that the average activity has a value of approximately $25,000, with no activity exceeding $200,000 without the consent of the Commissioner; and

    e. Activities of other contractors or companies that must be completed before the start of your Work or portion of Work must be included in the Schedule as milestones and identified with a designation approved by the Commissioner.

4. You must furnish the following information on the Schedule for each activity:

    a. Activity numbers assigned to the related portions of Work in the format of the project specification division and section numbers. You must submit the activity numbers to the Commissioner for review and approval;

    b. A description of the activity that is sufficiently detailed to permit an evaluation of your performance of the Work described;

    c. Duration of the activity in days, unless otherwise noted;

    d. Responsibility code for each activity that is not performed by you, indicating which Subcontractor, supplier, fabricator, or other contractor is to perform the activity;

    e. Each activity must be identified with early/late start, early/late finish, and total float;

    f. A breakdown by monthly node of dollar amount and percentage of Contract Price.

5. In addition to the above, any activity whose start or finish dates has been specified elsewhere in the Contract must be shown as the specified dates in the Schedule.

6. The following information must be furnished on the Schedule as summary items:

    a. The projected total percentage complete, on a monthly basis;

    b. Anticipated total partial payments, on a monthly basis, including Subcontractor payment breakdown; and

    c. The projected total manpower requirements, on a weekly basis.

d. Within 14 days after receipt of the detailed Schedule and supporting documents, the Commissioner will either approve the Schedule or reject it with written comments. If the Schedule is rejected, you must submit a revised Schedule within seven calendar days of the date of rejection. The Commissioner's decision to reject the Schedule is final and you may not dispute it under Article XX of the Contract.

e. You must provide prompt written notice to the Commissioner of any events or other changes that may delay or accelerate the Schedule.

f. If you fail to provide the Schedule within the time prescribed and/or updates within the stated time frames, it is an event of default under the Contract, and the Commissioner may, in addition to any other remedies available to the City, withhold monthly partial payments until such time as you submit the required information.

7. Changes to the Schedule

a. If you propose to make any changes to the Schedule, you must provide the Commissioner notice of the proposed changes, in writing, stating the reasons for the change, identifying each changed activity (including durations and interrelationships between activities) and providing a diskette of the proposed changed Schedule.

b. The originally approved Schedule will be the Baseline Schedule. The Commissioner, in his sole discretion, may approve or disapprove the proposed change in the Schedule to the extent that the change does not extend the Contract Time. He will provide a decision in writing to you within 10 days of receipt of your submission. All monthly updates must be plotted against the current revision of the Baseline Schedule.

c. If the Commissioner approves the change to the CPM Schedule you must submit a revised Schedule incorporating the change(s) within 10 days after approval along with a written description of the change(s) to the Schedule.

d. Any proposed change that would result in an extension of Contract Time requires a written modification of the Contract pursuant to Section XXIII.B, "Modifications," of the Contract.

8. Updating. The originally approved CPM will be designated as the Baseline Schedule and will only be changed based on a Contract Modification that extends the Contract duration.

a. All updates will be plotted against the Baseline Schedule. You must update the CPM Schedule on a monthly basis coincident with the submission of the pay estimate. The updated information must include the Baseline Schedule detail and the following additional information for each activity:

(1) Actual start dates;

(2) Actual finish dates;

(3) Actual activity percent complete;

(4) Remaining duration of activities in progress; and

(5) Critical activities must be identified or highlighted.

b. The updated information must include the Baseline Schedule detail and the following additional information for each summary item:

(1) Actual monthly and total-to-date Work percentage complete.

(2) Actual monthly partial payments, including Subcontractor partial payments; and

(3) Actual weekly and total-to-date manpower utilization.

c. The City may withhold partial payments if you do not submit updates as required.

9. Neither an update nor Schedule change may, in itself, extend the term of this Contract. The term of the Contract may only be extended by a written Contract Modification executed pursuant to Section XXIII.B, "Modifications," of the Contract.

10. Narrative Report. As part of the CPM Schedule update, you must prepare a written narrative report, highlighting the progress during the past update period. This written report must include the following information:

a. Summary of Work accomplished during the past update period;

b. Contract milestone comparison chart;

c. Analysis of critical path(s);

d. Analysis of time lost/gained during the update period;

e. Identification of problem areas; and

f. Recommended solutions to current problems.

11. You are required to attend a monthly CPM Schedule review meeting where the Schedule will be reviewed with the Commissioner. The purpose of this meeting is to review past progress, current status, problem areas and future progress. Your narrative report is reviewed at this meeting. Your representatives attending this meeting must have the authority to commit manpower and/or other resources to correct any negative impact to the Schedule. Any possible means of shortening the Schedule at no additional cost will be brought to the attention of the Commissioner. The Updated Progress Schedule will be used as a guide for verifying estimates of work completed for which payment is requested, and must accurately represent the project's current status. None of the information provided in this Section constitutes a request for a time extension.

E. Recovery Schedule

1. You must maintain an adequate work force and the necessary materials, supplies and equipment to meet the current approved Schedule. If you, in the sole opinion of the Commissioner, are failing to meet the approved Schedule, including any Contract

milestones, you must submit a recovery Schedule (the “CPM Recovery Schedule”). The CPM Recovery Schedule sets forth a plan to eliminate the schedule slippage (negative float). The plan must be specific and show the methods to achieve the recovery of time, e.g., increasing manpower, working overtime, weekend work, employing multiple shifts. You must bear all costs associated with implementing the CPM Recovery Schedule.

2. Upon receipt of the CPM Recovery Schedule, the Commissioner will review it for conformance with the Contract and degree of detail. The Commissioner, within 14 days after receipt of the CPM Recovery Schedule and supporting documents will approve it or reject it with written comments. If the detailed CPM Recovery Schedule is rejected, you must submit a revised CPM Recovery Schedule within seven calendar days after the date of rejection. The Commissioner’s decision to reject the CPM Recovery Schedule is final and you may not dispute it.

3. If you refuse to follow the direction of the Commissioner, the Commissioner reserves the right after seven days written notice to you, to procure the materials, equipment and labor to proceed with or to complete the Work or any portion of it and charge the cost to you. The Commissioner's rights under this provision are cumulative to rights under any other provisions of the Contract including the City’s rights to terminate for default or to early termination.

F. Time for Completing Punch List

1. TIME IS OF THE ESSENCE IN CLOSING OUT THE WORK, and you must begin work immediately after receipt of a list of minor miscellaneous or finishing work known as “Punch List Work." Your failure or that of your Subcontractors to begin the Punch List work within three days of receipt of the Punch List is an event of default.

2. You must diligently prosecute the Punch List work once begun and complete it within 30 days from receipt of the Punch List**.** If you fail to complete Punch List work within the 30 day time period, you must pay the liquidated damages set forth for “Punch List Work” in Book 2.

3. If liquidated damages are assessed, they will be added to the previously determined liquidated damages assessed as of the Substantial Completion Date or the City’s beneficial occupancy of the Project, whichever occurs earlier. The City’s takeover of the Project under Section XXI.C.3.b., however, does not constitute beneficial occupancy for purposes of liquidated damages.

G. No Damages for Delay; Extensions of Time

1. Should you be delayed in starting, prosecuting or completing the Work by any act of the City, including a delay, change, addition, deletion or modification in the Work or any omission, neglect or default of the City, or by order of the City, or anyone employed by or acting on behalf of the City, or by any cause beyond your control, none of which are due to any fault, neglect, act or omission on your part, then your relief is limited to an extension of the Contract Time that is no greater than the duration of any such delay. The extension of time releases and discharges the City, its employees, officials, agents and representatives from all claims for damages of whatever character, including any

claims you may make on account of disruption, changes in sequence, interference, inefficiency, direct or indirect cost or any other causes of delay.

2. You must notify the Commissioner in writing of the cause within five calendar days after the delay begins. Consideration of a time extension for events beyond your reasonable control will be made if the delay directly impacts the Schedule for completion of the Work. Events considered to be beyond your reasonable control are limited to acts of God, acts of the public enemy, fires, floods, earthquakes, epidemics, quarantine restrictions, labor strikes at the job site, freight embargoes, or weather significantly more severe than the norm, but only if the listed causes were not foreseeable and did not result from your fault or negligence and only if you took reasonable precautions to prevent delays owing to such causes.

3. Unless otherwise provided in the Contract, the Contract Time is based on normal weather conditions. An extension is granted for weather significantly more severe than the norm only if you demonstrate to the satisfaction of the City that any delay in the progress of the Work was due to such weather. The basis used to define normal weather will be the "normal" data as compiled by the United States Department of Commerce, National Oceanic and Atmospheric Administration in their most current report entitled "Local Climatological Data, Annual Summary with Comparative Data" for the month for which the time extension is sought. The effects of weather less severe than the norm may be taken into account in considering your requests for time extensions for the effects of more severe weather.

4. No extension of time will be granted under this Section for any delay if you, by your action or inaction, including your fault or negligence or that of your Subcontractors, caused the delay, or for which any remedies are provided under any other provision of the Contract.

5. The grant of an extension of time pursuant to this Section XI.G, “No Damages for Delay and Extension of Time,” in no way constitutes a waiver by the City of any rights or remedies existing under this Contract, at law or in equity.

6. You must submit in writing any claim for extension of time to the Commissioner not more than five days after the delay begins, otherwise the claim is waived. Any claim for extension of time must (i) state the cause of the delay; (ii) specifically demonstrate the impact of the delay on the Schedule; and (iii) state the number of extension days requested. If the cause of the delay is continuing, only one claim is necessary, but you must report, in writing, the cessation of the cause for the delay within 10 days after the termination. Any claim for extension of time that does not comply with this provision constitutes a waiver by you of your rights to any such extension.

7. After receipt of a timely and properly completed request for a time extension, the City may (i) grant a time extension for the entire length of the delay; (ii) grant a time extension for a portion of the extent of the delay; or (iii) deny the time extension.

8. If you do not agree with the City's decision on a claim for time extension, you may appeal the ruling to the Chief Procurement Officer under Article XX, “Claims and Disputes,” but only if you have complied with the notice requirements provided in these Terms and Conditions for Construction and the time extension request exceeds five

calendar days or the liquidated damages exceed $10,000. The Commissioner's decision is final whenever the time extension request is for a duration of less than five days or the liquidated damages are less than $10,000.

H. Suspension of Work

The Commissioner has authority to suspend the Work wholly, or in part, for such period of time as the Commissioner may deem necessary due to conditions unfavorable for the satisfactory prosecution of the work, or to conditions that, in the Commissioner's opinion, warrant the action or for such time as is necessary by reason of failure on your part to carry out orders given or to perform any or all provisions of the Contract. No additional compensation will be paid to you because of any costs caused by the suspension when the suspension is ordered for reasons resulting from any action or omission on your part or is related to utility adjustments, railroad work, work by other contractors on or near the Work covered by the Contract, or unforeseeable weather conditions.

I. Liquidated Damages

1. If the Work is delayed, you are liable for liquidated damages for every day you fail to achieve the Contract Completion Date (or any milestone completion date that provides for liquidated damages), but only if the delay is not the result of an excusable cause permitted under Section XI.G.2, "No Damages for Delay and Extensions of Time." The specific amount of liquidated damages for which you are liable is set forth in Book 2 of this Contract.
2. The City will recover liquidated damages by deducting the amount thereof out of any moneys due or that may become due you. If the moneys are insufficient to cover the damages, then you or your surety must pay the amount due. Nothing contained in this Section is to be construed as limiting the right of the City to recover from you all amounts due or to become due, and all costs and expenses sustained by the City for improper performance under this Contract, repudiation of the Contract, failure to begin work on the date of commencement, or failure to perform the Work with adequate forces, equipment or materials or other resources, or breaches in any other respect, including defective workmanship or materials. In addition to liquidated damages for failure to meet any milestones, you are liable to the City for any other damages sustained as the result of your refusal or failure to perform the Work.
3. If the City permits you to continue to perform Work despite your failure to meet any milestone date set forth in the Contract, the action in no way constitutes a waiver by the City of any rights or remedies that exist under this Contract, at law, or in equity.

XII. MEETINGS

A. Pre-Construction Meeting

Before beginning Work, the Commissioner may conduct a Pre-Construction meeting. Your representatives and Subcontractors must attend. The purpose of the meeting is to establish lines of authority and communication and the identification of duties and responsibilities of the organizations. Discussion will cover specific contract plans, specifications, unusual conditions, schedules of completion, and other features of the Contract. The Commissioner may conduct additional coordination meetings at his discretion.

B. Weekly Review Meetings

The Commissioner may conduct weekly review meetings. At a minimum, your project manager and superintendent must attend. However, you must arrange for Subcontractors to attend the meetings if expressly requested by the Commissioner. The meetings may include the following:

1. Review of Work progress since the previous weekly review meeting;
2. Discussion of field observations, problems and decisions;
3. Review of off-site fabrication problems and other problems affecting in the Contract Time;
4. Review of equipment deliveries;
5. Discussion of corrective measures and procedures to achieve the CPM Schedule;
6. Review of submittal schedules and effect on the CPM Schedule;
7. Review of proposed Contract changes and effect on the construction schedule;
8. Coordination requirements;
9. Clarifications and decisions required of the Commissioner;
10. Review of your forces on the Work; and
11. Review of Project Record Document status and content.

C. Monthly Review Meetings

The Commissioner may conduct monthly review meetings. At a minimum, your project manager and superintendent must attend. However, you must arrange for Subcontractors to attend the meetings if expressly requested by the Commissioner. The meetings may include the following:

1. Review of Work progress since the previous monthly review meeting;
2. Discussion of field observations, problems and decisions;
3. Review of off-site fabrication problems and other problems affecting the CPM Schedule;

4. Review of equipment deliveries;
5. Discussion of corrective measures and procedures to achieve completion in the Contract Time;
6. Review of submittal schedules and effect on the CPM Schedule;
7. Review of proposed Contract changes and effect on the Schedule;
8. Coordination requirements;
9. Clarifications and decisions required of the Commissioner;
10. Review of your forces on the Work; and
11. Review of Project Record Document status and content.

XIII. PAYMENTS

A. Contract Price

The "Contract Price" is the total dollar amount of your bid accepted by the City, including approved change orders. It includes all labor, equipment, materials, permits, licenses, fees, and taxes necessary to perform the Work. In the case of a lump sum Contract Price or lump sum line item, you must provide the Commissioner with a breakdown that includes a schedule of costs for the various parts of the Work included in the lump sum. The total of these costs must equal the lump sum Contract Price or lump sum line items, as applicable.

The breakdown must be submitted in such form and detail, and supported as to correctness by such data, as the Commissioner may direct. The City will make no payment to you until you have submitted the breakdown and the Schedule required by Article XI, "Schedule," and the Commissioner has approved them. The breakdown may be used for verifying monthly progress payments upon substantiation of the costs detailed and the progress of the Work.

For unit price line items, measurement and payment is as specified in the Detailed Specifications.

B. Procedure for Monthly Payment Requests and Final Payment

1. You and the City will agree upon a payment schedule of at least once per month, or more frequently if appropriate or if specified elsewhere in the Contract. The Commissioner will process payment requests pursuant to that agreement if your payment requests, in the Commissioner's sole judgment, are acceptable in form and content, and if the Work for which payment is being requested has been completed according to the terms and conditions of this Contract. All payment requests are subject to correction by the Commissioner.
2. In cases where you proceed to perform and complete the Work properly under the Contract, progress payments will be processed on a monthly basis unless the amount earned is greater than $1,000,000, then payments may be made twice a month. The payment period ends on the monthly anniversary date of the Notice to Proceed.

3. Each monthly payment request must include one original and two copies of the following:

   a. Certified Statement. You must submit certified statement(s) (signed by an authorized individual and notarized) for each payment request; the statement, in the form acceptable to the Commissioner, must list the following for you and for each Subcontractor and supplier for the period for which payment is requested:

      (1) the name and business address of the particular Subcontractor or supplier;

      (2) description of the work performed and/or product supplied;

      (3) [intentionally omitted]

      (4) the total amount of the particular subcontract;

      (5) the amount previously paid to the Subcontractor and the dates paid;

      (6) the amount of the monthly pay request you will pay to each individual Subcontractor and/or supplier from payments you receive on the request, and the dates those amounts were invoiced or requested by the Subcontractor or supplier;

      (7) the balance remaining under the subcontract to complete the Work.

   b. Partial Waivers of Lien to Date and Affidavit for Payment. Following your first payment request, you must submit Partial Waivers of Lien from all Subcontractors and suppliers that performed services and provided supplies during the month before your previous payment request. The Partial Waivers of Lien must be in a form acceptable to the City and must identify, at a minimum, the payment request number and time period covered. The Partial Wavier of Lien must be in dollar amount equal to the dollar amount of the services performed or supplies provided by the Subcontractor or supplier during the relevant time period. With every payment request, you must also submit an Affidavit for Payment from all Subcontractors and suppliers for whose services or supplies you request payment. The Affidavit for payment must be in a form acceptable to the Commissioner and identify, at a minimum, the payment estimate number, the time period covered, and the total amount invoiced by the Subcontractor or supplier, and the total amount paid to the Subcontractor or supplier to date; and

   c. [Intentionally Omitted]

   d. Certified Payrolls. You and all Subcontractors working on the job site must submit three copies of certified payrolls for the payment period to the Commissioner every week until all Work is completed. All payrolls must be identified with Contractor or Subcontractor's name, as appropriate, Contract name and be sequentially numbered. If there are periods of no Work by you or a Subcontractor, you must submit a payroll labeled "NO WORK." The final payroll must be clearly labeled “FINAL”. Certified payrolls are required to assure EEO compliance as well as wage compliance. Race, worker classification, and gender must be clearly marked for each employee on the certified payroll along with all additional information required by the Chief Procurement Officer. An employee's address should appear every time

his or her name appears on the payroll. You must submit the certified payrolls and additional information regarding EEO and wage compliance by providing a Payroll Summary Report in the form required by the Chief Procurement Officer. You and each Subcontractor must submit the EEO report forms required by the City and U.S. Department of Labor reflecting fully the periods of Work covered by the partial payment request. When directed, Contractor shall be required to submit payrolls electronically using the City's certified payroll and reporting system.

e. In April 2004, the Chicago City Council passed an ordinance requiring the City to report payments to subcontractors and suppliers on the City 's website. This ordinance applies to all City-funded, construction-related contracts awarded after June 28, 2004. In order to comply with this new ordinance, contractors meeting these criteria will be required to declare subcontractor payments with each invoice submitted. This reports the intended payments from prime contractors to subcontractors and suppliers from the invoice. The Subcontractor Payment Certification Form can be downloaded from the City's website at www.cityofchicago.org/finance/subcontractorform. The information from this form will be recorded in the City's financial system and posted on the City website.

C. Payment for Stored Material

1. Whether stored on- or off-the job site, the risk of loss for stored material will remain with you, and you must insure the stored materials against the risk of loss, theft or damage until its installment in the Work.

2. Payment for material stored on the job site will be 100% of a valid invoice. No payment will be made for materials stored off the job site unless otherwise authorized by the Commissioner in accordance with Section XIII.C.3. If Materials stored on the job site cannot be incorporated in the finished Work within a reasonable period of time you may include them in the monthly progress payment, but only if the following documents are submitted with the request for payment:

   a. Paid invoices showing the cost of material or equipment;

   b. Waiver of lien from the supplier indicating that the cost of the material or equipment was paid; and

   c. Inspection tickets showing that material or equipment had been inspected and accepted by the City.

3. Payment for material stored off-site, if authorized, will be 100% of a valid invoice when you have provided the Commissioner with the documents and assurances listed and complied with the requirements below:

   a. A paid invoice from the supplier showing the unit, quantity, description of the material or equipment and costs;

   b. A waiver of lien from the supplier for the total amount of the material purchased;

   c. Inspection for all of the material stored;

d. A certified statement giving the exact location of the materials or equipment, stating that:

(1) you have inspected all of the material stored and that it is complete and in good condition;

(2) the materials are suitably stored and maintained at a bonded, secure and environmentally appropriate location that the Commissioner has agreed upon and subject to the conditions required or established by him;

(3) you have complied with procedures satisfactory to the Commissioner to establish the City's title to the materials or otherwise protect the City's interest in them, including, insurance, storage and transportation to the Project site for the materials stored off-site, as the Commissioner may reasonably require;

(4) the materials, equipment and associated fabricated components will not be diverted away from the Project;

(5) a certificate of insurance coverage for the stored material upon which payment is requested;

e. Immediately upon receipt of payment for the material, you must prepare and execute all documents required to transfer title to the City, including, any Uniform Commercial Code documentation necessary to perfect transfer of title; and

f. All material and Work covered by payments will thereupon become the sole property of the City, subject to your obligation to insure it until Acceptance of the Work.

D. Retainage

Pursuant to § 2-92-250 of the Municipal Code, specifically paragraph A.1., the Chief Procurement Officer in consultation with the Chicago Department of Transportation has made a finding that holding retainage for this contract is not in the best interest of the City.

E. Payments Withheld

1. The Commissioner may decline a request for payment if, in the Commissioner's sole opinion, the request for payment is not adequately supported. If you and the Commissioner cannot agree on a revised amount, the Commissioner must process the payment in the amount he deems appropriate.

2. The Commissioner may decline to process any payment or may rescind in whole or in part any approval previously made to the extent that may be necessary in his sole opinion because of any failure to perform any obligation under the Contract, including:

a. Failure or refusal to provide the City the required initial schedule for the Work or monthly schedule updates and obtain the City's approval for either or both;

b. Your failure to remedy defective Work;

c. Your failure to make payments to Subcontractors, or employees, or provide partial waivers of lien;

d. Your failure to maintain timely progress of the Work as stated in your schedule, or the City's determination that the Work will not be completed within the Contract Time, or your failure to carry out the Work in accordance with the Contract;

e. Failure to follow the City, State, Federal, or Contract safety and security requirements;

f. Failure to maintain insurance policies as required by the Contract and/or to provide to the Commissioner each evidence of insurance coverage, in the form of current certificates of insurance, as he or she may require;

g. Failure to comply with other requirements as referenced in the Contract;

h. Failure to provide certified payrolls or other documents required under Section XI.G, "No Damages for Delay and Extensions of Time."

i. Failure to provide material inspections as required by the Contract; and

j. Failure to provide contract deliverables such as, accurate Record Drawings, warranties, guarantees, manuals, etc.

3. Pursuant to § 2-92-270 of the Municipal Code, the Chief Procurement Officer may, in his sole discretion, direct that no further payments be made, or vouchers or estimates issued to you, if he determines that you have failed to pay any Subcontractor, employee or worker for Work performed under this Contract. The City may withhold payment until you demonstrate, to the satisfaction of the Chief Procurement Officer, that payments to the Subcontractors, employees or workers have been made in full.

   If the Chief Procurement Officer gives you notice under Section XXIII.H that no further vouchers or estimates will be issued or payments made on the Contract until the Subcontractors, workers, and employees have been paid, and you neglect or refuse for a period of 10 days or more after notice was given to pay those Subcontractors, workers or employees, the Chief Procurement Officer may apply any money due, or that may become due, under the Contract to the payment of those Subcontractors, workers or employees without further notice to you and the effect will be the same, for purposes of payment to you of the Contract Price, as if the City had paid you directly.

   The failure of the City, however, to retain and apply any money, or of the Chief Procurement Officer to order or direct that no vouchers or estimates be issued or further payments made, will not, nor will the paying over of the reserved percentage without the Subcontractor, workers, or employees being first paid, in any way affect your liability or that of your sureties to the City, or to any such Subcontractor, worker or employee upon any bond given in connection with this Contract.

4. Debts; Outstanding Parking Violation Complaints

   In accordance with § 2-92-380 of the Municipal Code, and as otherwise permitted by law, in addition to any other rights and remedies (including any set-off) available to the City under the Contract or permitted at law or in equity, the City is entitled to set off a portion of the Contract price or compensation due under the Contract, in

an amount equal to the amount of the fines and penalties for each outstanding parking violation complaint and the amount of any debt owed by the contracting party to the City. For purposes of this provision, the terms "outstanding parking violation complaints" and "debt" are defined in the Municipal Code as are the conditions under which no set-off will be made.

5. Provisions Relating to Liens

Contractor will notify Subcontractors that no mechanic's lien under the Illinois Mechanics' Lien Act, 770 ILCS 60/23, *et seq*., will be permitted to arise, be filed, or maintained against public funds, the Project, or any part of it, or any interest in them, or any improvements on them, or against any monies due or to become due to Contractor on account of any work, labor, services, materials, equipment, or other items performed or furnished for or in connection with the Project to the extent permitted by law. Contractor, for itself and its Subcontractors, expressly waives, releases, and relinquishes such liens and all rights to file or maintain such liens; and Contractor further covenants that this waiver of liens and waiver of the rights to file or maintain such liens is an independent covenant.

If any of Subcontractors, employees, officials, agents, or any other person directly or indirectly acting for, through, or on their behalf files or maintains a lien or claim under the Illinois Mechanic's Lien Act, 770 ILCS 60/23, *et seq.*, against public funds or against any monies due or to become due to Contractor on account of any Work, labor, services, materials, equipment, or other items performed or furnished for or in connection with the Project, Contractor must cause such liens and claims to be satisfied, removed, or discharged within 30 days from the date of filing. The City may extend the 30 day period if (i) the City determines that the lien claim cannot be so satisfied, removed, or discharged in such period and (ii) Contractor, in the City's sole determination, is proceeding diligently to cause such liens or claims to be satisfied, removed or discharged. The City has the right, in addition to all other rights and remedies provided under this Contract or by law, to cause such liens or claims to be satisfied, removed, or discharged by any means at Contractor's sole cost, such cost to include reasonable legal fees.

6. The City's rights under this Section XIII.E, "Payments Withheld," are cumulative with any other rights provided for under this Contract. Failure by the City to exercise any such right afforded in this Contract, or at law or in equity, will not constitute a waiver of that right.

F. Prompt Payment to Subcontractors

1. Payment Within Seven Days. The Contractor must make payment to its Subcontractors **within 7 days** of receipt of payment from the City for each invoice, but only if the Subcontractor has satisfactorily provided goods or services or completed its work or services in accordance with the Contract Documents and provided the Contractor with all of the documents and information required of the Contractor. The Contractor may delay or postpone payment for a to a Subcontractor when the Subcontractor's work or materials do not comply with the requirements of the Contract Documents, the Contractor is acting in good faith, and not in retaliation for a Subcontractor exercising legal or contractual rights.

2. Liquidated Damages for Failure to Promptly Pay. Much of the City's economic vitality derives from the success of its small businesses. The failure by contractors to pay their subcontractors in a timely manner, therefore, is clearly detrimental to the City. Inasmuch as the actual damages to the City due to such failure are uncertain in amount and difficult to prove, Contractor and City agree that the Chief Procurement Officer may assess liquidated damages against contractors who fail to meet their prompt payment requirements. Such liquidated damages shall be assessed to compensate the City for any and all damage incurred due to the failure of the Contractor to promptly pay its subcontractors, and does not constitute a penalty. Any and all such liquidated damages collected by the City shall be used to improve the administration and outreach efforts of the City's Small Business Program.

3. Reporting Failures to Promptly Pay. The City posts payments to prime contractors on the web at:

http://webapps.cityofchicago.org/VCSearchWeb/org/cityofchicago/vcsearch/controller/payments/begin.do?agencyId=city.

If the Contractor, without reasonable cause, fails to make any payment to its Subcontractors and material suppliers within 7 days after receipt of payment under a City contract, the Contractor shall pay to its Subcontractors and material suppliers, in addition to the payment due them, interest in the amount of 2% per month, calculated from the expiration of the 7-day period until fully paid.

In the event that a Contractor fails to make payment to a Subcontractor within the 7-day period required above, the Subcontractor may notify the City by submitting a report form that may be downloaded from the DPS website at:

http://www.cityofchicago.org/content/dam/city/depts/dps/ContractAdministration/StandardFormsAgreements/Failure_to_Promtly_Pay_Fillable_Form_3_2013.pdf

The report will require the Subcontractor to affirm that (a) its invoice to the Contractor was included in the payment request submitted by the contractor to the City and (b) Subcontractor has not, at the time of the report, received payment from the contractor for that invoice. The report must reference the payment (voucher) number posted on-line by the City in the notice of the payment to the contractor.

Subcontractors are hereby reminded that per Chapters 1-21, "False Statements," and 1-22, "False Claims," of the Municipal Code of Chicago, making false statements or claims to the City are violations of law and subject to a range of penalties including fines and debarment.

4. Action by the City. Upon receipt of an electronic report of a failure to pay, the City will issue notice to the contractor, and provide the contractor with an opportunity to demonstrate reasonable cause for failing to make payment within applicable period set forth in the Contract. The Chief Procurement Officer, in his or her sole judgment, shall determine whether any cause for nonpayment provided by a contractor is reasonable. In the event that

the contractor fails to demonstrate reasonable cause for failure to make payment, the City shall notify the contractor that it will assess liquidated damages. Any such liquidated damages will be assessed according to the following schedule:

First Unexcused Report:	$50
Second Unexcused Report:	$100
Third Unexcused Report:	$250
Fourth Unexcused Report:	$500
Fifth and Each Succeeding Unexcused Report:	$1,000

The liquidated damages set forth above shall be assessed per unexcused report per contract, i.e., each successive report regarding a contractor's failure to pay under this Contract will be assessed liquidated damages, regardless of which subcontractor files the unexcused report(s).

By executing this Agreement, Contractor acknowledges and agrees that the City may collect such damages by deducting any amount due to the City from the next payment to be made to the Contractor. In the event that no further payments are due to Contractor, Contractor agrees to promptly pay such liquidated damages as it may owe to the City. Failure to make such payment within thirty (30) days of receipt of notice of the assessment of liquidated damages may result in Contractor being debarred from participating in City contracts for a period of not less than one year.

Contractors are reminded that each unexcused failure to pay promptly is an event of default under the Contract and, in addition to the liquidated damages provided for in this Section, is subject to the remedies found in Section XX.C of this Contract. Contractors are further reminded that per Section 2-92-270 of the Municipal Code of Chicago, failure to pay subcontractors as required by law and the Contract may result in the City suspending payments to Contractor and making direct payments to such subcontractors. Any such direct payments shall be from funds due and owing to the contractor.

5. Whistleblower Protection. Contractor shall not take any retaliatory action against any subcontractor for reporting non-payment pursuant to this Section F. Any such retaliatory action is an event of default under this Contract and is subject to the remedies set forth in Section XX.C hereof, including termination. In addition to those remedies, any retaliatory action by a contractor may result in a contractor being deemed non-responsible for future City contracts or, if, in the sole judgment of the Chief Procurement Officer, such retaliatory action is egregious, the Chief Procurement Officer may initiate debarment proceedings against the contractor. Any such debarment shall be for a period of not less than one year.

6. If the Chief Procurement Officer determines that the circumstances pertaining to a contractor's failure to pay promptly warrant excusing such non-performance, or determines that excusing such non-performance is in the best interests of the City, the Chief Procurement Officer may waive any of the remedies provided in this Section F. Each such

waiver is discrete, non-precedential and does not constitute a waiver of any subsequent remedies against a contractor who fails to comply with the terms and conditions set forth herein.

G. Payment for Changes

1. **Payment for Changes.** The amount to be paid by the City for changes (additions, deletions or revisions) in the Work or directions to change the Contract Time, will be made in accordance with Sections XIII.G.1.a through XIII.G.1.f below.

   a. **Unit Price Basis**. Should the changes in the plans result in an increase or decrease in the quantities of unit priced Work to be performed, you will accept payment as follows:

      (1) All increases in the Work of the type that appears in the Contract as unit price items will, except as provided in Section XIII.G.1.b., "Proposal Basis," be paid for at the Contract unit bid prices. Decreases in quantities included in the Contract will be deducted from the Contract value at the unit bid prices. No allowances will be made for delays or anticipated profits.

      (2) Quantities in excess of 125% of the bid quantities, when the total dollar value of the unit price item exceeds 5% of the original Contract bid amount, will be paid for at a negotiated unit price based on costs that are demonstrated by you and agreed to by the Commissioner, subject to the approval of the Chief Procurement Officer. The negotiated unit price can be higher or lower than the Bid Unit Price. Quantities in excess of 125% of the bid quantities, when the total dollar value on any unit price item does not exceed 5% of the total value of the original Contract bid amount, will be paid at the bid unit price.

      (3) Quantities below 75% of the bid quantities, when the total value of the unit price item exceeds 5% of the Contract Price at the time of bid, will be paid for at a negotiated unit price based on costs which are demonstrated by you and agreed to by the Commissioner, subject to the approval of the Chief Procurement Officer. The negotiated unit price can be higher or lower than the Bid Unit Price. Quantities below 75% of the bid quantities, when the total value on any unit price item does not exceed 5% of the total value of the Contract Price at the time of bid will be paid at the bid unit price.

      (4) If the Commissioner and you are unable to agree on a negotiated unit price, the Commissioner will determine a unit price, prepare a Contract Modification with the Work so priced, that you will sign. You may, however, timely dispute the amount of the unit price to the Chief Procurement Officer under Article XX, "Claims and Disputes." This is the only Contract Modification in which the release language required by Section XIV.D, "Contractor's Release," will not be included.

   b. **Proposal Basis.** If there are no unit prices for the changed Work, the payment may be based upon a price agreed to by the City and you. The proposal submitted will be a starting point for negotiation between the City and you. You must submit any

proposal for consideration for changed Work in writing, breaking down the Work to be done into segments of cost as follows:

(1) Labor. For all hourly wage labor and hourly wage foremen in direct charge of the specific operations, you will receive the prevailing rate of wage for every hour that the labor and foremen are actually engaged in the Work. No additional allowance or payment will be made for general superintendence. You will receive the actual costs paid to, or in behalf of, workers for health and welfare benefits, pension fund benefits or other benefits, when the amounts are required by collective bargaining agreement or other employment contract generally applicable to the classes of labor employed on the Work. An amount not to exceed 30% of XIII.G.1.a.(1) above and an amount not to exceed 10% of XIII.G.1.a.(2) above will also be paid to you.

(2) Insurance and Payroll Taxes. Cost for property damage, liability, and worker's compensation insurance premiums, unemployment insurance contributions and social security taxes on the extra Work, to which an amount not to exceed 10% of the cost of these items will be added. You must furnish satisfactory evidence of the rates paid for the insurance and taxes.

(3) Materials. For materials accepted by the Commissioner and used as an integral part of finished Work, you will receive the actual costs of the materials delivered on the job site, including transportation charges that you paid (exclusive of machinery rentals as set forth below), as shown by original receipted bills, to which 15% will be added to the first $10,000.00 and 10% for any amounts over $10,000.00.

(4) Equipment. Number of proposed equipment hours multiplied by the rate as allowed by the latest revision of "Schedule of Average Equipment Ownership Expense With Operating Cost" as issued by IDOT, or in the AED Compilation of Rental Rates if equipment is to be rented, for the period that the machinery and equipment are to be used on the Work, to which no percent will be added. Where machinery and equipment are not listed in these schedules, then the rates will be determined by the Commissioner after reviewing all of your available records or other information concerning the expense of operating that type of equipment.

(5) Cost for Increase in Performance and Payment Bond. You will furnish the Commissioner written documentation from the surety of the rate or rates applicable for additional bonding for this Contract. These rates will be applied to all the changes increasing or decreasing the Contract Price. No bonding costs will be allowed for Subcontractors. In the absence of written documentation from the surety, a percentage of the total change, as determined by the Commissioner, will be added or subtracted to cover the increase or decrease of the cost of the bond.

(6) When Work is to be performed by a Subcontractor, the proposal may include as administrative costs for you an amount not to exceed 5% of the first $10,000.00 and 1% of any amount over $10,000.00 of the total approved costs of the Work. The Subcontractor, however, is not allowed any additional markup if it sublets its

Work. The use of a Subcontractor requires the approval of the Chief Procurement Officer. All subcontracted costs must be supported by proposals from the Subcontractors performing the Work. The Contractor's Subcontractor's proposal must be broken down into its various parts of Work as described in items XIII.G.1.b.(1) through XIII.G.1.b.(4) above, or as required by the Commissioner.

c. **Time and Material Basis**. If the Commissioner and you cannot agree on a price based on a proposal, the Work will be paid for on a time and material basis. Work that is done on a time and material basis will be paid for as follows:

(1) Labor. For all hourly wage labor and hourly wage foremen in direct charge of the specific operations, you will receive the prevailing rate of wage for every hour that the labor and foremen are actually engaged in the Work. No additional allowance or payment will be made for general superintendence.

(2) You will receive the actual costs paid to, or in behalf of, workers for health and welfare benefits, pension fund benefits or other benefits, when the amounts are required by collective bargaining agreement or other employment contract generally applicable to the classes of labor employed on the Work.

(3) An amount not to exceed 30% of XIII.G.1.c.(1) above and an amount not to exceed 10% of XIII.G.1.c.(2) above will also be paid to you.

(4) No payment will be made for labor performed on a time and material basis until you have furnished the Commissioner with itemized statements of the labor cost as follows.

(a) Name, classification, date, daily hours, total hours, rate, and extension for each laborer and foreman.

(b) Certified payrolls or certified copies of them, pertinent to the Work for which payment is requested. The payroll records will contain the name, address and social security number of each employee, the employees correct classification, rate of pay, daily and weekly number of hours worked, itemized deductions made and actual wages paid. The time and material bills will be audited and corrected against the certified payrolls. Falsification of the certified payroll is an offense punishable by law.

(5) Insurance and Payroll Tax. For property damage, liability, and workers compensation insurance premiums, unemployment insurance contributions and social security taxes on the time and material Work, you will receive the actual costs, to which 10% will be added. No payment will be made for insurance and payroll taxes until you have furnished satisfactory evidence of the rate or rates paid for the insurance and tax.

(6) Materials. For materials accepted by the Commissioner and used as an integral part of finished Work, you will receive the actual costs of the materials delivered on the job site, including transportation charges paid by him (exclusive of machinery rentals as set forth below), as shown by original receipted bills, to

which 15% will be added to the first $10,000.00 and 10% for any amounts over $10,000.00.

(7) You will be reimbursed for any materials used in the construction of the Work, such as sheeting, falsework, form lumber, burlap, or other materials for curing, etc., that are not integral part of the finished Work. The amount of reimbursement will be agreed upon in writing before the Work is begun and no percent will be added. The salvage value of the materials will be taken into consideration in the reimbursement agreed upon.

(8) No payment will be made for material cost until you have furnished itemized statements of the material costs, which must include:

(a) Quantities of materials, prices, and extension;

(b) Material transportation costs supported by receipted invoices; and

(c) Receipted invoices for all materials used. However, if materials used on the time and material Work are not specifically purchased for the Work but are taken from your stock, then in lieu of the invoices, you will furnish an affidavit certifying that the materials were from your stock, that the quantity claimed was actually used, and that the price and transportation claimed represent the actual cost to you. The price quoted for the material must be reasonable and acceptable as per the normal industry practice.

(9) Equipment. You will be paid for all machinery and equipment (other than small tools as currently defined by the Illinois Department of Transportation) used on the Work in accordance with the latest revision of “Schedule of Average Annual Equipment Ownership Expense with Operating Cost,” as issued by the Illinois Department of Transportation, for the period that the machinery and equipment are in use on the Work, to which no percent will be added. Where machinery and equipment are not listed in this schedule, the rates will be determined by the Commissioner after reviewing all your available records or other information concerning the expense of operating that type of equipment. Where idle time for equipment is authorized by the Commissioner, it will be paid at a rate not to exceed 50% of the rates described above.

(10) When equipment is rented, you will receive actual rental cost as shown by original receipted bills to which 5% will be added.

(11) No payment will be made for equipment unless designations, dates, daily hours, rental rates, and extensions for each unit of machinery and equipment are shown on the itemized statement of time and material Work.

(12) Bond. The City will pay you the actual increase in cost of your performance bond. You will furnish from the bonding company written documentation of the rate or rates applicable for additional bonding for this Contract. These rate/rates will be applied to all the changes increasing or decreasing the Contract value. No bonding costs will be allowed for Subcontractors. In the absence of written documentation from the bonding company, a percentage of the total change, as determined by the Commissioner,

will be added or subtracted to cover the increase or decrease of the cost of the bond.

(13) When Work is performed by Subcontractor, you will receive as administrative costs an amount equal to 10% of the first $10,000 and 5% of any amount over $10,000 of the total approved costs of the Work. The Subcontractor, however, is not allowed any additional markup if it sublets its Work. The use of a Subcontractor will require the approval of the Chief Procurement Officer. All subcontracted costs must be supported by invoices from the Subcontractors performing the Work. The Subcontractors' invoices must be submitted in the form described in items (1) through (4) above.

(14) Documentation. For additional Work performed on a time and material basis you will each day submit to the Commissioner detailed and complete records of the labor, material, equipment, and other costs relating to any force account Work performed on the day the Work is performed. You and the Commissioner will sign these daily extra Work reports.

(15) Base Contract Work on a Premium Time Basis.

(a) For Contract Work performed outside of regularly schedule working hours as defined by the Contract, premium time costs will be paid, only if expressly directed in writing by the Commissioner before you begin the Work. Compensation, when authorized, will cover only the direct cost of the premium portion of the time involved and will be without any charge for insurance. No payment will be made for union fringe benefits on the premium portion of the time unless expressly required by union agreement. Taxes that are attributed to the premium portion of the time will be paid. If you seek to charge taxes, the Commissioner may require you to supply verification that the employees' Social Security Tax, Federal Unemployment Tax, and State Unemployment Tax limits have not been exceeded.

(b) An amount equal to 7% of the sum of the premium portion of the work plus taxes will also be paid to you to cover job site general conditions, overhead, and profit. All indirect costs are considered part of the overhead, including supervision, engineering, and other technical personnel.

(c) If you enter into a subcontract, you will be allowed an additional 2% of the Contractor's Subcontractor's premium time billing to cover your supervisory and related expense on subcontract operations. The Subcontractor is not allowed the additional 2% if it sublets its Work.

(d) You must keep Daily Work Reports for the premium time hours signed by you and the Commissioner. The reports must indicate the time of day when the Work was performed and wage rate differential that will be charged. Billings must reflect hours reported on Daily Work Reports.

d. **Changes on Lump Sum Contracts or Lump Sum Items in Unit Priced Contracts.** All increases or decreases in the Work that is listed in the approved schedule of values will be priced, for the purpose of any change, based on the amounts stated for the Work in the approved schedule of values.

e. **All invoices for changed work**. You must submit all invoices for changed work within 45 days following completion of the changed work. Failure to provide a complete invoice for the changed work within that period, will authorize the Commissioner, subject to the approval of the Chief Procurement Officer, to determine the final amount for the Contract Modification that may be awarded without your signature.

f. Miscellaneous.

(1) For the purposes of this Section, any business entity which employs field labor and performs Contract Work on the job site is defined as a Subcontractor." (This definition excludes suppliers/deliverers of materials.)

(2) When the extra Work involves only supply of material without any field labor at the job site, the supplier, for the purposes of this Section, will be considered a "Materials Subcontractor" and the mark up specified in Section XIII.G.1.c (6), "Materials," will apply.

(3) Expenses incurred by the City. Upon written request of the Commissioner, you will pay the costs related to the Work that are the responsibility of the City. You will be reimbursed for the actual amount paid out to which will be added a markup as specified in Section XIII.G.1.c above.

2. **Change Claims:**

a. If you and Commissioner are unable to agree on the price and/or time extension in connection with a change, you must, within 15 days of completing the changed work, provide written notice to the Commissioner of the amount of money and/or time extension sought by you and the Contractual and factual basis for each. You will designate the document Notice of Claim.

b. The Commissioner will, within 30 days from receipt of the Notice of Claim, respond by requesting a meeting with you, making a written request for additional information from you, including a general statement of the basis for the claim, the facts underlying the claim, the notice to the Commissioner of the change that gave rise to the claim, reference to the applicable Contract provisions, and all documentation that describes, relates to and supports the claim; taking other action to attempt to resolve the Notice of Claim, and/or advising you in writing that it should file a claim under Article XIX, "Claims and Disputes." Any steps taken by the Commissioner to resolve the Notice of Claim will not exceed 60 days from receipt of the Notice of Claim unless you agree to an additional amount of time in writing.

c. If the Notice of Claim cannot be resolved as provided for in Section XIII.G.2, you must follow the requirements of Sections XX.B and C, "Claims" and "Disputes."

d. If you do not agree with the adjustment for time and/or money proposed by the Commissioner, you must follow the procedures set out by the Contract to file a claim and/or dispute as provided in Article XX, Failure to follow the procedures set out by the Contract to file a claim and/or dispute as provided in Article XX, constitutes a waiver of the right to make a claim or file a Dispute to the Chief Procurement Officer. In the event of your waiver, you may file a Dispute under Section XX with the Chief

Procurement Officer seeking a final decision as to the adjustment for the changed work.

H. Night, Sunday and Holiday Work

Whenever you are permitted to perform Work at night, or on Sundays or State or Federal holidays, or to vary the period of hours during which any work is carried on each day, you must give written notice to the Commissioner, at least 24 hours in advance, so that proper inspection may be provided. The Work will be done under regulations to be furnished in writing by the Commissioner, and no extra compensation will be allowed therefore.

I. Acceleration

1. If progress falls behind the approved schedule, the Commissioner may direct and authorize you, in writing, to perform premium time work as indicated in TIME OF COMPLETION in the Proposal section of the specifications. No additional compensation will be paid for such premium time work and the cost incurred for inspection and testing during the premium time work will be considered as "extra" inspection, and reimbursement will be provided by you as described in Section XV.C, "Materials and Equipment Testing and Inspection."
2. If conditions are encountered where you are specifically directed and authorized in writing by the Commissioner to perform premium time work, on the original contract, to advance an already established completion date of an event or the project, or project milestone, you will be compensated in accordance with Section XIII.G.c (15).
3. When the premium time Work is performed by approved subcontractor, you will receive a markup as specified in Section XIII.G.c (15). of the Contract.

J. Payroll Canvass Reports

[This section deliberately omitted]

K. Electronic Ordering And Invoices

The Contractor will cooperate in good faith with the City in implementing electronic ordering and invoicing, including but not limited to catalogs, purchase orders, releases, and invoices. Contractor will accept electronic purchase orders and releases upon request of the Chief Procurement Officer. Contractor will provide the City electronic catalogs, copies of invoices and other electronic documents upon request. The electronic ordering and invoice documents will be in a format specified by the City and transmitted by an electronic means specified by the City. Such electronic means may include, but are not limited to, disks, e-mail, EDI, FTP, web sites, and third party electronic services. The Chief Procurement Officer reserves the right to change the document format and/or the means of transmission upon written notice to the Contractor. Contractor will ensure that the essential information, as determined by the Chief Procurement Officer, in the electronic document, corresponds to that information submitted by the Contractor in its paper documents. The electronic documents will be in addition to paper documents required by this Contract, however, by written notice to the Contractor, the Chief Procurement Officer may deem any or all of the

electronic ordering and invoice documents the official documents and/or eliminate the requirement for paper ordering and invoice documents.

XIV. CHANGES IN THE WORK

A. City's Right to Change Work

The Chief Procurement Officer and the Commissioner reserve the right to jointly order, in writing, changes in the Work or the Contract Time without prior notice to your surety. You are obligated to perform in a timely manner the changed Work included in the written notice from the Chief Procurement Officer and Commissioner. These changes may consist of additions, deletions, or other revisions, at the discretion of the City. You must begin the changed work upon receipt of a Field Order, signed by the Commissioner, with the prior written approval of the Chief Procurement Officer, unilaterally directing changes in the Work or Contract Time.

B. Contractor's Request

Within 14 days of receipt of the written notice from the Commissioner, you must submit to the Commissioner a written request for adjustment to the Contract Price and/or Contract Time for the revised Work.

C. Contract Modification

The final provisions of the Proposed Contract Modification, including the adjustment in the Contract Sum and/or the Contract time, if any, will be incorporated into a written Contract Modification signed by the City and you.

D. Contractor's Release

All Contract Modifications constitute a full release of the City from any liability for any additional compensation or extension of time arising or resulting from the Work performed pursuant to the Contract Modification. By executing a Contract Modification, you accept the compensation and/or time extension provided in it in full accord and satisfaction for that Contract Modification, and you expressly waive, release and relinquish all additional claims and demands relating to or arising out of the matters covered by that Contract Modification, including direct or indirect cost, profit, or damages related to disruptions.

E. Performance of Changed Work

You must promptly proceed with any changes in the Work or Contract Time as directed by a written order of the Commissioner ("Field Order"), in accordance with Section XIV.A., "City's Right to Change Work," with or without any Contract Modification. Your refusal or failure to proceed promptly with the changed Work as directed constitutes an event of default under the Contract. No change to the Work by you as directed by the Commissioner will operate to invalidate the Contract or release your surety.

F. Change Claims and Disputes

If you and Commissioner are unable to agree on the price and/or time extension in connection with a change, the procedures set forth in Article XX, “Claims and Disputes,” will govern.

XV. TESTING & INSPECTION

A. Material, Inspection and Responsibility

The City has the right to inspect all materials, equipment and each part or detail of Work, at any time, to be used in carrying out this Contract. The City does not assume any responsibility for the availability of any materials or equipment required under this Contract. You are responsible for all materials, components and completed Work furnished under this Contract. The City may reject materials, components or completed Work not complying with the terms and provisions of this Contract and you must replace it or them at no additional cost to the City. You must promptly remove any rejected materials or components rejected from the City’s premises at no additional cost to the City after you receive notice from the City that the materials or components have been rejected.

B. Inspection of the Work

1. All materials and equipment and each part or detail of the Work are subject at all times to inspection by the Commissioner or the Commissioner’s authorized representatives. You are held strictly to the requirements of the Contract with respect to quality of materials, workmanship and the diligent execution of the Contract. Inspection may include mill, plant, shop and field inspection of any material or equipment furnished and any installation and construction under the Contract. You must allow the Commissioner and his representatives access to all parts of the Work and furnish such information and assistance as may be required to make a complete and detailed inspection.
2. All tests performed by or at the direction of the Commissioner under this Contract are to verify that the materials you are providing meet the Contract requirements. You, at your own expense, may perform or have others perform similar tests for the purpose of maintaining the quality of the material being provided. Payment will not be made for uninspected or unauthorized use of materials incorporated into the Work.
3. You must remove or uncover such portions of the finished Work as the Commissioner may direct before acceptance. After the examination, you must restore the portion of the Work to the standard required by the Contract. If the Work thus exposed or examined proves acceptable, the City will pay the expenses of uncovering, removing and/or replacing the parts as extra work, but if the Work so exposed or examined is unacceptable, you must bear the expense of uncovering, removing and/or replacing of it in accordance with the Contract.
4. Except as may be otherwise specified in other sections of the Contract, the Commissioner will make final inspection of all Work included in the Contract as soon as possible after you notify him that the Work is substantially completed and ready for acceptance. If the Work is not acceptable to the Commissioner at the time of the

inspection, he or she will inform you as to the particular defects to be remedied before the Work is accepted as substantially complete.

C. Materials and Equipment Testing and Inspection

1. You must provide the Commissioner sufficient notice of placing orders to permit tests to be completed before the materials are incorporated into the Work. You must afford such facilities as the Commissioner may require for collecting and forwarding Samples and making inspections and test. All Samples must be furnished without charge to the Commissioner. You must not make use of or incorporate into the Work the materials represented by the Samples until tests have been made and the materials have been found to be in accordance with the requirements of the Contract.
2. For materials that are integral parts of machinery or equipment or of parts of equipment that you or your Subcontractor normally stock, you must furnish the original and one copy of certified tests made at the time of production. You will keep the original and the Commissioner will retain the copy.
3. You must assure that the Commissioner has free entry, at all times while Work is being performed, to all parts of the manufacturer's works that concern the manufacture of the material or equipment ordered. The Commissioner must be permitted to examine all components and subassemblies. Assemblies and parts must be numbered for identification. You must provide the Commissioner with a detailed production schedule before the first inspection. After review of the schedule, the Commissioner will inform you of the methods, extent of inspection, facilities desired and date of inspection. You will afford the Commissioner without charge, all facilities necessary to determine that the material or equipment furnished are in accordance with the Contract. Test and inspection may be at the place of manufacture before shipment.
4. If for any reason, the City elects not to make the tests, the Commissioner may direct you to make the necessary tests. You must furnish a certification of the ordered tests after completion. The Commissioner reserves the right to inspect and reject all materials or equipment that were previously inspected and accepted at the place of manufacture or source of supply, after they were delivered to the Work site, if the materials or equipment do not meet the requirements of the Contract.
5. When an inspection trip is terminated due to insufficient materials, unacceptable quality, Contractor labor problems, or Contractor equipment problems, you must pay the City its costs for any additional inspection trip.
6. The Contract documents may require you to include the cost of travel and living expenses for a specific number of City employees and/or other persons for a specific test. The manufacturer or you must furnish a certification of the ordered tests after completion. The Commissioner reserves the right to reinspect and reject all materials or equipment that have been previously inspected and accepted at the place of manufacture or source of supply, after they have been delivered to the site if the materials or equipment do not meet the requirements of the Contract.
7. Unless otherwise provided, all materials will be sampled and tested in accordance with the latest published standards and methods of the American Society for Testing and Materials (ASTM) and any revisions of them. If there are no ASTM standards that apply,

applicable standard methods of other recognized standardizing agencies will be used. You must provide the name and qualifications of any such standardizing agency to the Commissioner for review and approval.

D. Testing Laboratory Labels

You must submit all equipment containing electrical wiring to the City for acceptance before installation. All electrical components that you furnished and installed or assemble under this Contract must be approved and so labeled by one of the following Testing Laboratories:

1. Underwriters' Laboratories (UL)
2. Canadian Standards Association (CSA)
3. Electrical Testing Laboratory of New York (ETL)
4. Illinois Institute of Technology research Institute (IITRI)
5. American Gas Association (AGA)
6. Factory Mutual Research Corporation (FMRC)
7. Maintenance and Electrical Testing (MET)
8. American Research Lab (ARL)

Any electrical unit comprised of a number of components, assembled at the factory and considered custom made, must bear one of the above labels for the entire unit as well as for each component.

You must pay all costs in obtaining a testing laboratory label at no additional cost to the City. Any delays in completion of the Work caused by the manufacturer of equipment in obtaining the required testing laboratory labels and the City approval are not grounds for an extension of time beyond the time of completion indicated in the Contract.

XVI. CONTRACTOR PRACTICES AT SITE

A. Cooperation Among Contractors

You must conduct the Work so as not to interfere with or hinder the progress or completion of the work being performed by other contractors within or adjacent to the Work site. You must assume all liability, financial or otherwise, in connection with this Contract, and must protect and save harmless the City from all damages or claims that may arise because of inconvenience, delay, or loss experienced due to the presence and operations of other contractors working within the limits of the Work. You must assume all responsibility for Work not completed or accepted due to the presence and operations of other contractors. You must coordinate and tie-in, where appropriate, your Work with that of others in an acceptable manner and perform the Work in proper sequence to the work of others. When other contractors cause any damage to the Work that you performed, you must file claims with the other contractors, and not against the City, and you must obtain compensation for damage directly from those other contractors.

B. Protection of Persons and Property

1. Protection of Existing Structures and Property. You must avoid causing damage to trees, plant life, sidewalks, curbs, streets, alleys, pavements, utilities, adjoining property, the work of other contractors and the property of the City and others, and must, at your own expense, repair any damage that you or any Subcontractor may cause.

   You are responsible for loss or damage by fire or theft of equipment, material, or other property of the City, incurred while the equipment, material or other property is located in any field office or on the site of the Work. Further, you must repair or replace any such equipment, material or other property so lost or damaged, to the satisfaction of the Commissioner, at no additional cost to the City.

   You must familiarize yourself with the requirements of local and state laws applicable to underpinning, shoring and other Work affecting adjoining property and, wherever and whenever required by law, site conditions or standard industry practice, you must shore-up, brace, underpin, secure and protect all foundations and other parts of existing structures adjacent to, adjoining and in the vicinity of the Work site that may be in any way affected by the excavations or other operations connected with the Work to be performed under this Contract.

   You are responsible for the giving of all required notices to any adjacent or adjoining property owner or other potentially affected party. The notice must be served in sufficient time so as not to delay the progress of the Work under this Contract.

   You must take such precautions as are necessary to insure the safety of private property owners, lessees, and their invitees against injury caused as a result of settlement or displacement of structures. You must immediately proceed with all shoring or other Work necessary to restore the private property owner's property to a safe condition. If you fail to undertake the Work within 24 hours after written notice by the Commissioner, the City may proceed to repair or restore any such structure to a safe condition, and the cost of it will be deducted from any compensation due, or that may become due to you.

   If, in the prosecution of the Work, it is necessary to excavate or occupy any street, alley, or public grounds of the City, you must erect and maintain such barriers, and, during the night time, such lights as will effectively prevent the happening of any accidents or damage to life, limb, or property in consequence of such excavation or occupation of such street, alley, or public grounds. You are liable for all damage occasioned by you, your agents, employees or Subcontractors of any tier in the excavation or occupation of any street, alley, or public grounds, and you must indemnify the City pursuant to Article XIX, “Insurance, Indemnity and Bonds.”

   Upon Final Completion and Final Acceptance of the Work, you must remove all machinery, equipment, materials, false work, rubbish or temporary structures and leave the Work site and the premises of any private property owners in as good condition as they were before commencement of Work.

   Materials and equipment necessary for the performance of the Work may only be placed, stored or allowed to occupy any space in public streets or alleys upon the written consent of the Commissioner. It is the City’s intent that the operations under this Contract are conducted as far as practicable without interference with the public use of streets and alleys. All materials or equipment used in the performance of the Work must

be placed so as not to impede traffic on streets and alleys adjacent to the site of the Work, and to allow free access to all fire hydrants, water valves and manholes that are a part of electric, telephone and telegraph conduit lines, fire alarms and police call boxes in the vicinity.

In removing existing pavements, sidewalks, curbs, gutters, walls, foundations, vaults and other structures, the use of any type of impact device in a manner that might damage buildings or their foundations, or other underground structures and utilities is not permitted.

You must indemnify and hold the City harmless from any damage due to settlement or the loss of lateral support of adjacent or adjoining property and from all loss or expense and all damages for which the City may become liable in consequence of the injury or damage to adjacent and adjoining structures and their premises. Your indemnity obligations will survive the expiration or termination of this Contract and include and apply to any liabilities and duties placed upon the City as owner or occupant of the property on which the improvements provided for in this Contract are to be constructed, by the provisions of an Act entitled "An Act to Prescribe the Duty of an Owner or Occupant of Lands Upon Which Excavations are Made in Reference to the Furnishing of Lateral and Subjacent Support to Adjoining Lands and Structures Thereon." See of 765 ILCS 140/0.01 et seq.

2. Existing and Proposed Utilities. The Contract may show existing utilities lying within the limits of the Work, such as sewers, manholes, catch basins, gas lines, water lines, telephone and electrical duct lines, CTA facilities, and similar structures. The City does not guarantee the completeness or accuracy of the information regarding utilities, whether public or privately owned. You must make your own investigation to determine the existence, nature and location of all utilities at the Work site. You must verify the exact location of all utilities that may interfere with performance of the Work and must report to the Commissioner any differences from the locations shown on the Contract.

   You must so arrange and conduct your Work that utilities may be removed, relocated or supported during excavation and maintained in service until the Work is completed. In addition, you must arrange and conduct your Work that utilities may be replaced, rearranged or relocated before backfill being placed. You must cooperate with the owners of those utilities in the performance of the Work.

   Where existing utilities are abandoned and it is necessary to remove them due to the performance of the Work, you must remove them at no additional cost to the City, and they will become your property.

   It is your responsibility to protect those existing utilities that are to remain in operation during and after completion of the Work, and any new utilities installed by others during the performance of the Work. You will be held fully responsible for any damage resulting from your performance of the Work, and will be required to repair, replace or reconstruct any utilities damaged, at your own expense, to the satisfaction of the Commissioner. The protection of the utilities as specified in this Contract must be at no additional cost to the City.

3. Utilities Outside the Limits of the Work. You must protect and maintain City-owned water lines, sewers, connections and appurtenances and all City-owned electrical

conduits, cables, vaults and appurtenances that are located entirely outside the limits of the Work in a satisfactory manner until the completion of the Work. Whenever in the performance of the Work it is necessary, because of the nature of the Work or because of your method of performing the Work, to support, remove, replace, relocate, rearrange, adjust or repair such City-owned structures located entirely outside of the excavations, you must notify the appropriate City department to perform the Work, and must cooperate with the department in preserving service. You must reimburse the appropriate City department for the cost of performing the Work at no additional cost to the City under the terms of this Contract.

4. Utility Relocation and Continuance of Service Plan. You must prepare a Utility Relocation and Continuance of Service Plan, identifying procedures, locations, time frames and affected agencies and private owners. The Plan must be submitted to the Commissioner for review within 14 days after the Notice to Proceed.

5. Cooperation with Utilities. You must cooperate with all utility companies involved in connection with the removal, temporary relocation, reconstruction, or abandonment by these agencies of all services or facilities owned or operated by them within the limits of the Work.

6. Work Performed by Others. The Work must be performed with a minimum of interference to street traffic in the area. You must coordinate your Work with that of other City contractors, with contractors employed by adjacent property owners, and with contractors employed by any other party or parties for work on utilities to insure the best progress of the Work as a whole.

7. Preservation and Protection of City Standard Bench Monuments and Survey Controls. You are responsible for the preservation and protection of all City Standard Bench Monuments, in accordance with the provisions of § 10-4-220 of the Municipal Code and Article 105.09 of the Standard Specifications, and as directed by the Commissioner. Any survey control point that you disturb or remove you must replace or reestablish to the satisfaction of the Commissioner, at no additional cost to the City. **DAMAGE TO ANY OF THE CITY STANDARD BENCH MONUMENTS WILL RESULT IN YOUR BEING PROSECUTED TO THE FULL MEASURE OF THE LAW.** The Department of Transportation will pursue the matter of compensation for damages incurred by the City resulting from your actions or your failure to act during the execution of Work on this project.

8. Protection of Streets and Traffic. You must provide all necessary barricades, signs, flags, lights and reflectors. You must assure that vehicular and pedestrian traffic on all streets, including adjacent streets, bridges, overpass structures and ramps is maintained during the performance of the Work in accordance with the requirements of the Contract.

9. Temporary Restoration of Trench Cuts. Failure to maintain the temporary restoration of trench cuts, which causes the surrounding work area to be in an impassable and/or hazardous condition thereby creating undue inconvenience and danger to area residents is an event of default under this Contract.

10. Temporary Barriers, Signs, Lights and Flaggers. You must furnish, relocate and remove portable barricades and lights, collision protection, temporary signs (including traffic and project signs) and supports as directed by the Commissioner; and furnishing all

necessary flaggers and other protection necessary for the maintenance of traffic flow in a safe and orderly fashion, as required by Article 107.14 of the IDOT Standard Specifications, except as otherwise specified in the Contract.

You must maintain, repair or replace all damaged or destroyed appurtenances referenced in the immediately preceding paragraph throughout the life of the Contract. Maintenance includes cleaning of the barricades and traffic signs by means of clean water. Flaggers must be provided whenever circumstances warrant.

The barricades must be erected, moved, repaired and repainted as required. Upon the completion of the Work, all barricades remain your property and must be promptly removed from the Work site.

11. Historical and Scientific Specimens. You must preserve and deliver to the Commissioner any specimens of historical or scientific value encountered in the Work, as directed by the Commissioner.

C. Protection of Streets, Alleys and Public Grounds

When excavating or occupying any street, alley or public grounds of the City, you must erect and maintain temporary barriers and, during the night time, lights that will effectively prevent accidents or damage to life, limb or property in consequence of the excavation or occupation of the street, alley or public grounds. You are liable for all damages as a result of the excavation or occupation of any street, alley or public grounds, or by the carelessness of you, your subcontractors, agents, employees or workers and must indemnify and hold harmless the City against all judgments rendered against it by reason thereof.

Construction Period Traffic Management Plan. You must prepare a Construction Period Traffic Management Plan consistent with the requirements of the Contract. The Plan must be submitted to the Commissioner for review within 14 days after award You must comply with all applicable federal, state and local requirements and coordinate with Chicago Department of Transportation, Bureau of Traffic and Illinois Department of Transportation. You must also comply with the following requirements:

1. Construction staging segments must be kept as short as feasible;
2. Lane closure must be kept to a minimum, and at least one lane must remain open to vehicular traffic;
3. Intersections must remain open to traffic in both directions at all times;
4. Detours must be provided in streets as necessary and approved by the Commissioner;
5. Signage plans must be developed and implemented for all approved detours;
6. Coordinate adjustments required for traffic signals; and
7. Allow for emergency access at all times.

D. Protection of Existing Trees in the Right of Way

1. In accordance with the provisions of Chapter 10-32 of the Municipal Code you must protect all trees and shrubs at the construction site from damage. You must restore all

damaged parkways to their original condition and repair or remove and replace any trees and shrubs damaged as a result of construction activity (as determined by the Department of Streets and Sanitation, Bureau of Forestry) at your expense. If any trees or shrubs damaged by construction activity must be removed and replaced, and trees or shrubs of comparable size, type, and value are unavailable or the time for planting is unsuitable, the City will charge you their appraised value determined as provided under § 10-32-200 of the Municipal Code, which amount the City will deduct from amounts due you, or, if no amounts are due, then you must promptly pay the City the amounts determined. Any tree greater than 4" D.B.H. that is permanently damaged due to the construction project and not originally marked for removal must be replaced with a new tree as identified by the Bureau of Forestry and must have a minimum of 4" caliper B&B. Any damaged tree smaller than 4" caliper measured 6" above the ground must be replaced in kind, inch for inch.

2. You must install a **protection barrier or temporary fence** of at least 1.2m (4 feet) in height around each tree to be *protected and preserved*. *The tree protection* must be installed before the actual construction starts and maintained for the duration of the project.

   Within this protection zone, you must prevent construction materials from being stored, equipment from being operated and temporary storage buildings or work trailers from being placed.

   The protection barrier must be constructed of orange snow fencing securely fastened to fence posts spaced a maximum of 1.5 m (5 feet) on center. Posts are 1.8m (6 feet) in length with 61 cm (2 feet) set into the ground and 1.2m (4 feet) extending above ground. The fencing must be attached to the post with a minimum of four nylon locking ties evenly spaced at each post.

   Dimensions of the **protection barrier** are as follows:

   Trees located in Tree Pits: Where trees are located within Tree Pits, the temporary fencing should be installed at a minimum distance of the inside dimension of the Tree Pit opening with one stake at each corner of the opening.

   Trees located in Parkways or Boulevards:

   Small Trees (<9" D.B.H.): Minimum 1.5m (5 feet) from face of tree along the parkway length. In the dimension bordered by the public sidewalk or curb, the temporary fencing must be the width of the grass parkway with a maximum offset of 30cm (1 foot) from back of curb or edge of sidewalk. In no case must the closure be less than 61cm (2 feet) from the centerline of the tree.

   (Example: 6" Tree in a 6' parkway as measured from back of curb to sidewalk. The dimension of the protection fencing would be 1.2m x 3m (4' x 10') with tree in the center). Note: Larger grass parkways (>12') may allow for a ten foot by ten foot (10' x 10'). Thus, the dimension bordered by the sidewalk or curb would not affect fencing distance.

   Medium (10"to 15" D.B.H.): Minimum of ten (10) feet from face of tree along the parkway length. In the dimension bordered by the public sidewalk or curb, the fencing must be the width of the grass parkway with a maximum offset of one foot from back of

curb or edge of sidewalk. In no case must the closure be less than two feet from the centerline of the tree.

Large (>15" D.B.H.): Minimum of 15 feet from face of tree along the parkway length. In the dimension bordered by the public sidewalk or curb, the fencing must be the width of the grass parkway with a maximum offset of one foot from back of curb or edge of sidewalk. In no case must the closure be less than two feet from the centerline of the tree.

E. Care of Existing Structures and Property

1. Property Access Maintenance Plan. You must prepare a Property Access Maintenance Plan consistent with the requirements of the Contract. The plan must be submitted to the Commissioner for review within 14 days after award of the Contract. You must comply with all applicable Federal, State, and local requirements. You must also comply with the following requirements:
    a. Maintain vehicle and pedestrian access to properties;
    b. Maintain pedestrian access on both sides of all streets;
    c. Provide access walkways to all buildings and businesses;
    d. Sidewalks must remain open to the maximum extent possible;
    e. Provide temporary relocation of access, where required;
    f. Provide advisory and temporary signs for pedestrian and vehicle access changes and reroutings; and
    g. Coordinate delivery locations and timing.
2. Before doing any Work adjacent to or on the site of any buildings or other structures adjoining or in the line of the Work to be performed under the Contract, you must supply written notice of it to the owner or owners that the Work is to be done, and must cooperate with the owner(s) in the maintaining, removing, relocating, rearranging or adjusting wherever necessary, of all basements of buildings, subsidewalk vaults, tunnels, conduits, wires, poles, pipes, gas mains, cables, steam and street railway tracks and equipment, or other appliances and structures located in any portion of the streets, public areas, highways and easements to be occupied or used during the prosecution of the Work.
3. Wherever in the performance of the Work it is necessary to remove, reconstruct, relocate, rearrange, adjust or repair City-owned sewers, catch basins, manholes, inlets, sewers connections and appurtenances by reason of the fact that the structures and appurtenances pass through or are located within the limits of the Work as shown on the plans, or ordered by the Commissioner you must perform the Work necessary to remove, reconstruct, relocate, rearrange, adjust or repair those structures and appurtenances, unless otherwise noted on the plans.
    a. The Commissioner will, at his sole discretion, direct you to modify your method of Work to interfere as little as possible with the normal conduct of business in or around the portions of the buildings or structures in use.

b. The building or structures may be in full time use and operation and will continue in normal use during performance of the Work. Building facilities, including heating, ventilation, and air conditioning, lighting and plumbing, will not be interrupted in the occupied areas, except as required for making connections to power sources as specified below.

c. You will serve written notification to the Commissioner requesting any anticipated interruption in facilities at least two weeks before disruption of services. You must provide any temporary facilities deemed necessary by the Commissioner due to a disruption of services. The Commissioner, in his sole discretion, will determine the procedures, times of day and dates you may accomplish the Work and may reject or modify your request.

d. Storage of all material and/or equipment must be in areas approved by the Commissioner, in a manner to minimize interference with the normal conduct of business in or around the occupied portions of the building and vehicular areas.

4. You must not perform Work on City-owned water mains, connections and appurtenances or on any City-owned electrical conduits, cables, vaults and appurtenances unless the City has abandoned the structure and the Commissioner has authorized the Work or the Work is included in the Contract. But, you must adjust City-owned water manholes and electric manholes that are shown as “to be adjusted” on the plans.

   a. You must protect and maintain in a manner satisfactory to the Commissioner, protect and maintain all City-owned water mains, connections and appurtenances and all City-owned electrical conduits, cables, vaults and appurtenances that are located entirely outside of the neat lines of the excavation as shown on the plans or as ordered by the Commissioner, until the completion of the Work under the Contract. Whenever in the performance of the Work under the Contract it becomes necessary because of the nature of the Work required by the Contract or because of your method of performing the Work, to support, remove, replace, relocate, rearrange, adjust or repair those City-owned structures located entirely outside of the excavations, you must notify the appropriate City Department to perform the Work, and must cooperate with the Department in preserving service in or through them. You must reimburse the appropriate City Department for the cost of performing the Work, and the cost must be included in the various Contract prices.

   b. Without cost to you the City will support, protect and maintain all City-owned water mains, connections and appurtenances and all City-owned electrical conduits, cables, vaults and appurtenances, any part of which is located inside of the neat lines of the excavations as shown on the plans or ordered by the Commissioner, or it will remove, replace, relocate, rearrange, adjust, or repair them, both inside and outside of the excavations. You, however, must adjust those City-owned water manholes and electric manholes that are shown as “to be adjusted” on the plans. Whenever in the performance of the Work under the Contract it becomes necessary to support, protect, maintain, remove, replace, relocate, rearrange, adjust or repair such City-owned structures any part of which is located inside of the excavations, you must notify the appropriate City department to perform the Work and must cooperate with the department in preserving service in or through them.

c. With the exception of the City-owned water mains, connections and appurtenances and the City-owned electric conduits, cables, vaults and appurtenances described above, and with the exception of City-owned structures that are to be removed or otherwise Worked upon as part of the requirements of the Contract, you must support, protect, maintain or relocate and rebuild all poles, trees, shrubbery, fences, sewers, pipes, conduits, cables, wires, manholes, tunnels, buildings, subways and other City-owned structures that pass through and are located within the excavations or that are adjacent to the Work to be constructed under the Contract during the construction and until the completion of the Work under the Contract.

5. You must notify and cooperate with the owners thereof in maintaining, removing, relocating, rearranging, or adjusting wherever necessary, all basements of buildings, subsidewalk vaults, tunnels, conduits, wires, poles, pipes, gas mains, cables, steam and street railway tracks and equipment or other appliances or structures located in any portion of the streets, public areas, highways and easements that are to be occupied or used during the construction of the Work specified under the Contract.

    a. Wherever in the performance of the Work specified under the Contract it becomes necessary to remove, replace, rearrange, adjust or repair City-owned sewers, catch basins, manholes, inlets, sewer connections and appurtenances by reason of the fact that the structures and appurtenances pass through or are located within the limits of the excavations as shown on the plans or ordered by the Commissioner, you must perform the Work necessary to remove, replace, relocate, rearrange, adjust or repair the structures and appurtenances. The cost of performing the Work must be included in the Contract price.

    b. Wherever in the performance of the work specified under the Contract it becomes necessary to support and maintain City-owned sewers, catch basins, manholes, inlets, sewer connections and appurtenances or wherever it becomes necessary as a result of your methods of construction during the Work under the Contract, to remove, replace, relocate, rearrange, adjust, or repair City-owned sewers, catch basins, manholes, inlets, sewer connections and appurtenances (other than those specified in the last preceding paragraph) you must perform the Work necessary to support, maintain, remove, replace, relocate, rearrange, adjust or repair the structures and appurtenances, and you must bear the cost of the Work without any additional compensation for it.

    c. It is the intention of the specifications that you include in the appropriate Contract Price or prices, all necessary cost and expense of supporting, maintaining, removing, replacing, relocating, rearranging, adjusting or repairing all City-owned appliances and structures (other than City-owned water mains, connection and appurtenances and City-owned electrical conduits, cables, vaults and appurtenances described in Section XVI.E.4.b), encountered in or affected by the Work, and that you must also include in the price or prices all necessary cost and expense of removing structures that have been or will be abandoned by their owners and that are necessary to be removed in order to construct work under the Contract, but you must not

include in the price or prices the cost or expense of supporting, maintaining, moving, replacing, relocating, rearranging, adjusting or repairing those appliances or structures that are not owned by the City and are not abandoned by their owners, except as may be otherwise specified below in this Section.

6. You must take all reasonable precautions for the protection of buildings, railroad tracks, street railway tracks and appurtenances, and other appliances and structures not owned by the City.

7. You must determine the methods to be employed, the procedure to be followed, the equipment, plant, falsework, shoring, bracing and other temporary structures and equipment to be used on the Work, subject to the requirements of the Contract and the approval of the Commissioner. Only adequate and safe procedures, methods, structures and equipment must be used.

8. You must provide drawings and calculations for all equipment, falsework, shoring, bracing and other temporary structures required for the Work, designed, signed and sealed by an Illinois licensed structural engineer. You must submit copies of all such drawings and calculations to the Commissioner for information only.

9. Field Check of Dimensions, Cutting and Patching. Where the Work connects to existing structures or appurtenances, you must take complete field measurements affecting all Work under this Contract and are solely responsible for the proper fit between the Work and existing structures or appurtenances. You must perform all cutting, patching, or fitting of Work that may be required to properly fit together the several parts of the Work and the existing structures or appurtenances.

10. Contractor's Layout of the Work. You are responsible for the correct lay-out and accurate fitting of all parts of the Work. You must furnish at your own expense all labor, materials and other expenses necessary for, or incidental to, the setting and maintaining of lines and grades (exclusive of the Work of establishing the original reference base line and bench marks that will be performed by the City). No separate payment to you for the cost of any of the Work specified in this Contract. The cost is included in the Contract unit or lump sum prices.

11. Salvage of Materials. If and whenever City- owned property such as valves, cast iron manholes, catch basin frames and covers, inlet boxes and grates, or any other appurtenance are to be removed and are not to be reused in the Work, you must securely store them at a suitable place on the job Site for possible use by the City (unless otherwise stipulated). You must take care to prevent damage in your handling of these appurtenances. You must deliver all items identified by the City for reuse to a location designated by the Commissioner and must legally dispose of the remaining items.

12. Wherever basements of buildings, subsidewalk vaults, tunnels, sewers, water, gas, telephone, telegraph, electric or other pipes, conduits, cables, wires, manholes, vaults, steam and street railway tracks or other similar structures and appliances not owned by the City are in or cross the excavations for structures to be built under this Contract, you must notify the owners of the structures and appliances to support, move, rearrange or abandon them, and cooperate with the owners of the structures and appliances in

preserving the service or services provided by the structures and appliances, except as may be otherwise specified or provided in the Contract. If you have complied with the above requirements and has been notified by the owners of the structures and appliances that any of them have been abandoned, or lacking such notice, if you have made all investigations and has found that any of the above structures or appliances have been abandoned by their owners and if the removal of any such abandoned structure or appliance is necessary in order to construct the Work, you must remove them at no additional cost to the City.

13. Wherever basements of buildings, subsidewalk vaults, tunnels, sewers, water, gas, telephone, telegraph, electric or other pipes, conduits, cables, wires, manholes, vaults, steam and street railway tracks or other similar structures and appliances are adjacent to, but do not cut through or cross the excavations for structures to be built under the Contract, you must perform the Work in such a manner as to not cause damage to the structures and appliances and not interrupt their use during the progress of the Work.
14. You must arrange to notify the owners of structures and appliances that are to be supported, maintained, removed, reconstructed, relocated, rearranged, adjusted or repaired by reason of the Work in ample time to permit them to do their work. The Commissioner may direct you to suspend your operations on that part of the Work that affects the structures and appliances until their owners have had time to perform the work.
15. You must conduct the Work so that no equipment, material or debris is placed upon private property unless you have first obtained the owner's written consent thereto and provided this written consent to the Commissioner. You must take such means as may be required to prevent the creation of a public nuisance on any part of the Work site or adjacent streets or property.
16. You must thoroughly clean all streets, pavements, sidewalks and parkways and all private property of all surface materials, earth and rubbish and restore them to as good condition as before the commencement of the Work. Where you have removed or killed sod, you must provide new live sod. Where the areas have been seeded, you must replace top soil equivalent to that removed, fertilize it, seed and roll it to the satisfaction of the owner of the land. You must replace all trees, shrubs and plants damaged in the proper season of the year with live, growing stock of the same kind and variety and of the size ordinarily used for planting purposes.

F. Precautions and Safety

1. You must take any precautions that may be necessary to render all portions of the Work secure in every respect, to decrease the liability of accidents from any cause and to avoid contingencies that are liable to delay the completion of the Work. You must furnish and install, subject to the approval of the Commissioner, all necessary facilities to provide safe means of access to all points where Work is being performed and make all necessary provisions to insure the safety of workers and of engineers and inspectors during the performance of the Work. You are required to conduct your Work so as not to unnecessarily obstruct the activities of other contractors who also may be engaged in work on this or any other project.

2. Although the Commissioner may observe the performance of the Work and reserves the right to give you opinions and suggestions about safety defects and deficiencies, the City is not responsible for any unsafe working conditions. The Commissioner's suggestions on safety, or lack of it, will in no way relieve you of your responsibility for safety on the Work site. You have sole responsibility for safety and the obligation to immediately notify the Commissioner of all accidents.

3. Precautions must be exercised at all times for protection of persons (including employees) and property. The safety provisions of applicable laws and building and construction codes must be observed.

4. You must provide completely equipped first aid kits readily accessible at all times on the Work site. You must designate an appropriately trained individual on each shift to be in charge of first aid.

5. You must provide at appropriate locations fire extinguishers or other fire protection equipment that comply in all respects with the Municipal Code and NFPA standards. You must maintain this equipment in proper operating condition at all times and must cause the equipment to be inspected by all appropriate agencies as required by law, but in no event less than monthly. You must comply with the Municipal Code requirements on the use of standpipes, hoses and other fire protection equipment.

6. Only such materials and equipment as are necessary for the construction of the Work under this Contract must be placed, stored or allowed to occupy any such space at the site of the Work. Not more than one day's supply of flammable liquids, including oil, gasoline, paint, or solvent is permitted to be kept on hand at any one time. If gasoline, flammable oils, other highly combustible materials or compressed gas cylinders are to be stored at the site, they must be stored in a secure manner, in compliance with all applicable laws, ordinances and regulations, and all storage places must be clearly marked. The written consent of the Commissioner is required for such storage. That consent in no way limits your liability for the materials.

7. You must prohibit all lighting of fires about the premises and all smoking in restricted areas where posted with "NO SMOKING" signs, and you must diligently enforce this prohibition. You must furnish and post "NO SMOKING" signs. You must not permit any debris or waste materials to be burned at the Work site.

G. Health, Safety and Sanitation

1. Clean-Up. During construction, you must keep the Work site and adjacent premises as free from material, debris and rubbish as practicable. Haul roads, streets and public areas must be swept daily. Before Final Completion and Acceptance of the Work, you must remove from the Work site and adjacent premises all machinery, equipment, surplus materials, falsework, excavated and useless materials, rubbish, temporary buildings, barricades and signs and must restore the site to the same general conditions that existed before the commencement of the Work. The cost of final clean-up is included in the unit prices for the various items, or included in the Contract lump sum price, as the case may be. You must clean off all cement streaks or drippings, paint smears or drippings, rust stains, oil, grease, dirt and any other foreign materials

deposited or accumulated on any portion of your Work, or existing facilities and structures, due to your performance of the Work.

2. Snow and Ice Removal. You must remove snow and ice that may impair progress of Work, be detrimental to workers, or impair trucking to and from points of delivery at the Work site.

3. Glass Breakage. You must replace all glass broken or damaged during construction at no additional cost to the City. You must promptly remove all broken glass from the Work site.

4. Noise and Vibration Control. All equipment, vehicles, and Work under this Contract must be conducted in accordance with the City Building Code, Chapter 11-4 of the Municipal Code, "Environmental Protection and Control," Article VII - *Noise and Vibration Control,* so as to cause a minimum of noise, vibration and inconvenience to the activities of the occupants of property and buildings in the vicinity of the Work. When the Commissioner, in his sole discretion, determines that your operations constitute a nuisance, you must immediately proceed to conduct your operations in a manner that abates the nuisance. You must provide all measures, including engine and exhaust mufflers, acoustic casing enclosures, maintaining equipment, or physical barriers along the edges of the construction zone, required to minimize noise and vibration. Noise and vibration levels may be monitored by the Commissioner.

5. Health and Safety. You must comply with the requirements of 29 C.F.R. part 1926 - Safety and Health Regulations for Construction, promulgated under the U.S. Occupational Safety and Health Act of 1970, as amended, 29 U.S.C. 651 *et seq*. (OSHA). Copies may be obtained from the Regional Administrator of the U.S. Department of Labor, Federal Office Building, 230 S. Dearborn, Chicago, Illinois.

   You must comply with the requirements of the Illinois Health and Safety Act, 820 ILCS 225/.01 et seq., and the rules and regulations promulgated under it by the Director of Labor for the State of Illinois, which are on file with the Illinois Secretary of State.

   Whenever a Federal OSHA Compliance Officer arrives at the work site, you must notify the Commissioner immediately. At the conclusion of the inspection, you must report any findings to the Commissioner. Copies of any citations issued and related documents must be submitted to the Commissioner.

   You must maintain the following records and make available to the Commissioner for review: (i) all records required by OSHA, including the accident log, Fed/OSHA #200, and posting of the prescribed OSHA poster; (ii) log of safety activities, accident investigation, employee instruction, training, tool-box meetings, and any other pertinent information; and (iii) Material Safety Data Sheets (MSDS) as required for each material you have used at the Work site.

6. You must enforce among your employees such regulations in regard to cleanliness and the disposal of garbage and wastes that are necessary for their health and tend to prevent the inception and spread of contagious and infectious disease among them. You must provide an ample supply of suitable, pure drinking water, and must take such means as the Commissioner may direct to effectively prevent the creation of a nuisance on any part of the Work site or adjacent streets or property. You must construct and

maintain necessary sanitary conveniences for the use of the laborers on the Work, properly secluded from public observation, in such manner and at such points as be approved, and their use must be strictly enforced. Whenever manholes have been used for sanitary proposes, they must be thoroughly flushed and cleaned when no longer needed.

The manner of disposing of waste must be such that all waste is disposed of without creating a public nuisance or health hazard and in accordance with Illinois Department of Public Health Circular No. 815, Educational Health Circular No. 4.001, and all Illinois Environmental Protection Agency rules and regulations.

You must also comply with all rules and regulations of the Federal and State governments and the City Department of Public Health.

H. Hazardous Operations and Security

1. During construction, all cutting or welding operations must be carried out with all precautions taken to prevent fires resulting from sparks or hot slag. Extreme care must be exercised to determine that sparks or embers do not fall into any combustible materials, even if such material is stored on lower floors. Sheet metal wind screens must be provided around the lead-melting furnaces whether the Work site is enclosed or not. Portable fire extinguishers must be provided at and below all locations where cutting or welding or melting operations are being performed or, if those operations are extensive, a hose from the stand pipe system or fire hydrant must be placed nearby. You must obtain special permission from the Commissioner of Water and pay all associated connection fees.
2. No welding, flame cutting, or other operations involving use of flame, arcs, or sparking devices, will be allowed without adequate protection. All combustible or flammable material must be removed from the immediate working area. If removal is impossible, flammable or combustible materials must be protected with fire blankets or suitable non-combustible shields to prevent sparks, flames or hot metal from reaching flammable or combustible materials. You must provide necessary personnel and equipment to control incipient fires resulting from welding, flame cutting, or other sources involving use of flame, arcs, or sparking devices.
3. You must immediately report any concentration of gas fumes, and you are responsible for clearing the area and notifying the Commissioner and the appropriate utility company. All operations in the area must be suspended until the source of the fumes has been located and corrected.
4. You must arrange for the installation of necessary fire protection lines and equipment as required by the Chicago Fire Department and as necessary to properly protect the Work site. Permanent fire protection facilities may be used for this purpose as soon as they are installed, tested and approved by the Commissioner for temporary use.
5. Salamander heaters or similar forms of uncontrolled heaters must not be used except with the special written permission of the Commissioner and City fire marshal and then only when each salamander is maintained under constant supervision.
6. Gasoline must be kept in and handled from approved safety cans.

7. All tarpaulins used for any purpose must be made of fire, water and weather-resistant materials.

8. You must furnish such watchmen as may be necessary to protect the public and those who are at or in the vicinity of the Work under this Contract, and to protect all materials, tools, machinery and equipment and all Work you have performed.

9. You must comply with all Federal and State and local occupational health and safety statutes, and any occupational health and safety standards promulgated thereunder; provide reasonable protection to the lives, health and safety of all persons employed under this Contract; furnish to all such persons a place of employment that is free from recognized hazards that are causing or are likely to cause death or serious physical harm; keep all persons employed under this Contract informed of your protections and obligations under the statutes; and provide all persons employed under this Contract with information regarding hazards in the workplace, including information about suitable precautions, relevant symptoms and emergency treatment. The Federal and State occupational health and safety statutes, and the rules and regulations promulgated thereunder, are considered part of this Contract as though fully set forth in this Contract.

10. You must provide safety instructions and training for all workers. You must conduct weekly craft safety meetings (tool-box type) of reasonable length as an effective means of communicating safety issues to workers. Reports containing tool box discussion topics must be signed-off by all attendees and must be submitted to the Commissioner.

I. Services and Use of Site

1. Work Area. After receipt of the Notice to Proceed, you must propose a suitable working area subject to approval by the Commissioner. You must secure the space at your own expense.

2. Temporary Services and Utilities. If specified in the Contract, you are responsible for arranging for and providing all general services and temporary facilities as specified in the Contract and as required for the proper and expeditious prosecution of the Work. You must pay all costs for those general services and temporary facilities. You must provide temporary connections for water, electricity and heat including installation, maintenance and removal of those facilities. You must pay the cost of all water, telephone, and electricity during the construction period.

    a. Water. You must provide temporary water connections as required for drinking and construction purposes. The Commissioner reserves the right to regulate the use of water and may impose restriction on the use if you are using water carelessly. You must provide water and facilities for obtaining water for sanitary purposes, drinking, mixing concrete and for all other purposes at your expense. You are not permitted to obtain the water from the mains of the Chicago water system, except as may be provided in the Contract. Except with special permission from the Commissioner and the Department of Water, you must not make connections for water to the City's fire hydrants.

    b. Light and Power. You must furnish the electricity and must furnish and install all wiring, electrical services, lighting units, insulated supports for wiring and all other electrical equipment together with all other incidental and collateral Work

necessary for the furnishing of the temporary power and lighting facilities for the Work to be done under this Contract, all at no additional cost to the City. Electrical Work must be performed by a licensed electrician.

c. Temporary Heating During Construction. You must provide temporary closures or enclosures for all exterior door, window, roof or other types of exterior openings as required to provide protection from the elements during construction. It is your responsibility to keep water in pipes from freezing and to maintain temporary heat in areas where Work is being performed at not less than 50° Fahrenheit. Finish Work includes, but is not limited to masonry, plastering painting, millwork and other temperature sensitive Work. The Heating period is from approximately October 1 to May 30 unless conditions warrant otherwise. You must furnish, install, operate and maintain all required temporary heating equipment, and must provide and pay all fuel costs.

3. Temporary Construction Facilities. Unless otherwise specified, you must provide and maintain the following temporary construction facilities throughout the construction period and remove them at the completion of the Work:

a. Field Offices. Unless otherwise specified in Book 3, you must provide a temporary building or mobile type field office of such size and containing such equipment as you deem necessary to conduct the operations. The field office must be provided with a telephone for your superintendent and a pay telephone for use by others during the entire period of construction. The telephone must be removed promptly upon Final Completion and Acceptance of the Work.

Unless otherwise specified in Book 3, you must supply a field office for the City's Superintendent consisting of a separate office facility. It must be of adequate size for efficient operations and be furnished with a desk, three chairs, 4-drawer file cabinet and a plan table. It must be equipped with electric lighting, heating, ventilating and cooling facilities. You must provide a separate telephone for City Superintendent's use.

You must also provide and maintain in clean condition for Superintendent’s use, including toilet facilities, having a water closet and laboratory fixture connected to sanitary sewer and water service. Temporary toilet facilities must be located in the City's Superintendent's trailer and comply with City and State regulations relating to health and sanitation. The toilet facility must be serviced twice weekly and kept stocked with toilet paper, soap, and paper towels.

b. Toilets. You must provide at least one portable chemical toilet for every 20 workers or fraction of that number at the Work site as soon as construction operations commence. Toilet facilities must be serviced, at a minimum, twice weekly, which includes draining tank and refilling and disinfecting the interior of each toilet unit, and keeping each unit stocked with toilet paper. Toilet facilities must be maintained during the term of the construction period and removed upon completion of the Work.

c. Stove heaters in temporary offices and sheds must be properly installed to protect combustible walls, floors and roof.

d. Storage of Materials. If it is necessary to store materials, they must be protected in such a manner as to insure the preservation of their quality and fitness for the work. All stored materials will be inspected at the time of use in the Work even though they may have been inspected and approved before being placed in storage. You may store materials in the areas provided as working areas by the Contract. If no areas are provided, or if the areas provided are insufficient, you must provide the space required at your expense. Upon completion of the Work, you must clean and restore the storage sites and working areas to their original condition at your expense.

   All materials and equipment must be received at the Work undamaged. The Commissioner has the right to reject any method of packing and shipping that, in the Commissioner's opinion, will not adequately protect the materials and equipment against damage while they are in transit or storage or that will damage existing structures.

e. Storage Sheds. You and each Subcontractor must provide suitable watertight storage sheds for your, or their own, use as needed. You and each Subcontractor are responsible for and must pay for any electric services to your or their storage sheds. However, the electrical Work must be performed by a licensed electrical Subcontractor. You are responsible for materials stored in the open; they must be arranged in an orderly manner and properly protected against the elements and damage.

4. Working Space. You must provide working space for your own use and for each of your Subcontractors. It must provide sufficient space for benches, tools, material storage and for such other purposes as may be required to properly perform and expedite the Work. Allocation of such Work areas is subject to approval by the Commissioner. You must maintain all Work areas in a clean and orderly condition and take whatever precautions as may be necessary adjacent to the new Work. You must clean, repair or replace any damage to Work site due to improper protection at no additional cost to the City.

5. Equipment and Falsework: You must determine the methods to be employed, the procedures to be followed, the equipment, plant, falsework, shoring, bracing, and other temporary structures and equipment to be used on the Work, subject to the requirements of the Contract. Only adequate and safe procedures, methods, structures, and equipment must be used. You must furnish and maintain and are solely responsible for all equipment such as temporary ladders, ramps, runways, hoists, scaffolding, and similar items required for proper execution of Work. All such apparatus, equipment and construction must meet the requirements of Federal, State and local laws concerning the safety and protection of employees. No hoist, scaffolding or other equipment must be erected at such location as will interfere with general construction or progress of other trades. Hoists, scaffolding or other equipment must be located at sufficient distance from exterior walls to prevent staining or marring of any permanent Work. All suspended scaffolding and staging must be lowered to ground level at the end of each work day.

6. Project Signs. You must erect and maintain signs identifying the Project and indicating City, and to the extent applicable, State and Federal participation. Work under this item includes constructing and erecting project signs of the size and material specified in the Contract drawings. These signs must be erected in locations approved by the

Commissioner and must be maintained throughout the term of this Contract. You are responsible for the immediate removal of graffiti. If you are notified of graffiti, you must remove such within 24 hours. The signs must not be removed until you receive such notice from the Commissioner. No separate payment will be made for furnishing, erecting and maintaining the project signs; it is incidental to the Contract.

J. Reports and Plans

1. Daily Progress Reports. You and all Subcontractors must prepare and submit to the Commissioner daily progress reports on the various parts of the Work. The report must include the number of workers and the classification of the trades involved, equipment used and any pertinent information regarding possible delays in the Work.
2. Procedures, Methods and Equipment. You will determine the methods to be employed, the procedure to be followed, the equipment, plant, falsework, shoring, bracing and other temporary structures and equipment to be used on the Work, subject to the requirements of the Contract. Only adequate and safe procedures, methods, structures and equipment must be used. Any approval, constructive or otherwise, by the Commissioner of such methods, procedures and equipment in no way relieves you of any of your obligations under this Contract.

XVII. STANDARD SPECIFICATIONS

A. Concreting in Freezing Weather

You must provide protection of Portland Cement Concrete from cold weather in accordance with Articles 1020.13(c) and/or 1020.13(e) of the Standard Specifications. The cost of all protection of the concrete from cold weather as may be required and as specified in the those specifications must be included in the contract unit prices for Class “SI” concrete other appropriate items of the contract and no additional payment will be made therefore.

B. Protection of Railroad Traffic and Property

The following supplements the Standard Specifications and any Supplemental Specifications in effect; and in case of conflict with any part of parts of the Standard or Supplemental Specifications, this supplement takes precedence and governs. Add the following to Article 107.12., "Protection of Railroad Traffic and Property":

Whenever such Work, in the opinion of the Railroad Engineer, or his duly constituted and authorized representative, may affect the safety of trains and the continuity of the Railroad's operations, the method of doing such Work must first be submitted to the Railroad Engineer for approval, which will not be unreasonably withheld or delayed, and without which the Work must not be commenced or prosecuted.

The approval of the Railroad Engineer is not to be considered as a release from responsibility or liability for any damage that the Railroad may suffer, or for which it may be held liable by the acts of you, your Subcontractors, or your or their employees.

You are cautioned that when you are working over and/or near railroad property, you must provide adequate protection to safeguard the railroad property. You must also notify all railroad companies affected by the construction 10 days before starting any work that involves working on or over railroad property and must receive permission from the companies before entering onto railroad property.

XVIII. ENVIRONMENTAL REQUIREMENTS

A. Compliance with Environmental Laws

1. You must comply with all Environmental Laws including those listed in the Economic Disclosure Statement and Affidavit (EDS), which you must execute and have notarized, and any analogous future local, State or Federal ordinance or statute, rule and regulation promulgated under or under the foregoing, and any other present or future law, ordinance, rule, regulation, permit or permit condition, order, or directive which regulates, relates to, imposes liability for or establishes standards of conduct concerning any Hazardous Materials that may be set forth by the Federal government, any state or any political subdivision thereof, or any agency, court or body of the Federal government, any state or any political subdivision thereof exercising executive, legislative, judicial, regulatory or administrative functions.
2. If you are required under any Environmental Laws to file any notice or report of a release or threatened release of Hazardous Materials or Special Wastes on, under, or about any premises you use to perform the Work required under this Contract, you must provide a copy of the report or notice to the City. In the event of a release or threatened release of Hazardous Materials or special waste into the environment, or in the event of any claim, demand, action or notice is made against you regarding your failure or alleged failure to comply with any Environmental Law, you must notify the City pursuant to Section XVIII.C, “Disposal of Waste Materials, Construction Debris, Soils and Waste,” below.
3. If you fail to comply with any Environmental Law, the City may terminate this Contract in accordance with the default provisions of this Contract and may adversely affect your eligibility for future contract awards.

B. Environmental Permits

1. You must show evidence of, and keep current throughout the term of this Contract, all waste hauling, special waste hauling, disposal permits and insurance certificates required by Federal, State, City or other local governmental body or agency pursuant to any Environmental Law.
2. When requested by the Chief Procurement Officer, you must submit copies of all hauling permits required by any Environmental Law. Copies of all permits and insurance certificates that require periodic renewal must be forwarded to the Chief Procurement Officer throughout the duration of this Contract. Noncompliance with this requirement may be cause for rejection of the bid and/or termination of this Contract and declaring you non-responsible in future bids.

3. Environmental Records and Reports. You are required to prepare and maintain proper, accurate and complete records of accounts of all transactions related to the performance of this Contract, including:

    a. Vehicle maintenance records;

    b. Safety and accident reports;

    c. IEPA or OSHA manifests;

    d. Disposal records, including disposal site used, date, truck number and disposal weight, bills of lading, manifests, or other confirmatory receipts signed by a representative of accepting facility for each load of material; and

    e. Permit documentation and all other documentation and transactions pertaining to all Environmental Laws.

C. Disposal of Materials, Construction Debris, Soil and Waste

1. You are responsible for the proper disposal of all materials, construction debris, soil and other waste. Hauling and disposal by a Subcontractor does not relieve you from responsibility for proper disposal. Disposal of all materials, construction debris, soil, and other wastes must be at a disposal site that is properly licensed and permitted to accept the particular materials, construction debris, soil and other wastes delivered to it in accordance with all Environmental Laws. You must identify the disposal site(s) or transfer station(s) to which you have contractual access and for which proper, sanitary landfill permits and/or licenses have been obtained.

2. You must provide the Commissioner or his designated representative with copies of all load tickets, manifests, bills of lading, scale tickets and other pertinent documents. When requested by the Chief Procurement Officer, you must provide copies of all permits and/or licenses for the proposed transfer station and/or landfill. If the transfer station and/or landfill you propose to use does not possess the necessary permits and/or licenses to accept the materials, construction debris, soil or other wastes, you must replace the transfer station and/or landfill submitted as part of their bid proposal at no additional cost to the City. If you dispose of materials, construction debris, soil or other wastes at a site that is not properly permitted, you will be responsible for all costs associated with the removal of the waste to a properly licensed/permitted landfill or disposal site.

3. You must notify the Commissioner, within 24 hours, of receipt of any environmental complaints, fines, citations, violations or notices of violation ("Environmental Claim") by any governmental body or regulatory agency against you by any third party relating to the loading, hauling or disposal of materials, construction debris, soil or other wastes. You must provide evidence to the Commissioner that any such Environmental Claim has been addressed to the satisfaction of its issuer or initiator.

4. You must notify the City of any community meetings, media involvement or media coverage related to the loading, hauling or disposal of materials, construction debris, soil and other wastes under this Contract in which you are asked to participate.

5. You must verify, in writing, whenever requested by the Commissioner, that all materials, construction debris, and other waste you accept from the City have been disposed of in compliance with all Environmental Laws.

6. The form for identifying your debris disposal/handling site(s) and acknowledging terms and conditions relating thereto which you have executed and attached to this Contract is incorporated by reference (the "Form"). In addition to the representations and requirements contained in the Form, you acknowledge that unless otherwise authorized in writing by the Commissioner of Environment, you must not continue to use a disposal/handling site identified in the Form that (i) has been cited as being in violation of any environmental law or regulation or of any City ordinance; or (ii) does not have a necessary permit. If only one site was identified in the Form, you must arrange for a substitute disposal/handling site that meets the requirements specified in the Form and provide a revised Form to the Commissioner of Environment. You further acknowledge that any such substitution is at no additional cost to the City, regardless of the reason necessitating such substitution.

D. Equipment and Environmental Control During Transport

You must haul materials, construction debris, soil and other wastes in vehicles and/or containers complying with all applicable Environmental Laws. All equipment used to transfer materials, construction debris, soil and other wastes must be designed to prevent spillage during the hauling operation. Your equipment must fully comply with all City, State and Federal Regulations, laws and ordinances pertaining to size, load weight, safety and any Environmental Law.

E. Environmental Control

In performing the Work, you must become thoroughly familiar with all Federal, State, and local statutes, ordinances, and directives with respect to the elimination of excessive noise and pollution of air, water, and soil due to construction and other operations. Attention must be given to reduce the noise of heavy construction equipment and to the control of dust, smoke, and fumes from construction equipment and other operations on the Work site, and the dirt and noise created by heavy truck operations over City streets in accordance with ordinances of the City and orders of the Commissioner. The discharge of Hazardous Materials into waterways and City sewers is not permitted.

F. Open Dumping Prohibited

The removal of all recyclable material and garbage, refuse or other waste material, including broken concrete, bricks, rock, paving asphalt and incidental debris generated from all construction or demolition activities performed under this Contract, must be transported to a facility that is zoned and permitted to accept the material under Chapter 11-4 of the Municipal Code and all applicable local, State, and Federal regulations.

You must retain bills of lading, manifests, or other confirmatory receipts signed by a representative of accepting facility for each load of material and make them available to the City upon request

G. Environmental Protection

You must comply with, and must cause your Subcontractors to comply with, all Federal environmental and resource conservation laws and regulations, whether existing or promulgated later, as they apply to this Contract. You must include these provisions in all subcontracts. Some, but not all, of the major Federal laws that may affect this Contract include the National Environmental Policy Act of 1969, as amended, 42 USC §§ 4321 *et seq.*; the Clean Air Act, as amended, 42 USC §§ 7401 *et seq.* and scattered sections of 29 USC; the Clean Water Act, as amended, scattered sections of 33 USC and 12 USC; the Resource Conservation and Recovery Act, as amended, 42 USC §§ 6901 *et seq.;* and the Comprehensive Environmental Response, Compensation, and Liability Act, as amended, 42 USC §§ 9601 *et seq.*. You and your Subcontractors must also comply with Executive Order No. 12898, "Federal Actions to Address Environmental Justice in Minority Populations and Low-Income Populations," 59 Fed. Reg. 7629, Feb. 16, 1994; U.S. DOT statutory requirements on environmental matters at 49 USC § 5324(b); Council on Environmental Quality regulations on compliance with the National Environmental Policy Act of 1969, as amended, 40 CFR Part 1500 *et seq.*; and U.S. DOT regulations, "Environmental Impact and Related Procedures," 23 CFR Part 771 and 49 CFR Part 622.

1. Air Quality. You must comply with all applicable standards, orders, or regulations issued pursuant to the Clean Air Act, as amended, 42 USC §§ 7401 *et seq.* Specifically, you must comply with applicable requirements of U.S. EPA regulations, "Conformity to State of Federal Implementation Plans of Transportation Plans, Programs, and Projects Developed, Funded or Approved Under Title 23 USC or the Federal Transit Act," 40 CFR Part 51, Subpart T; and "Determining Conformity of Federal Actions to State or Federal Implementation Plans," 40 CFR Part 93; and National Emission Standards for Hazardous Air Pollutants (NESHAP), 40 CFR § 61.145. You further must report and require each Subcontractor at any tier to report any violation of these requirements resulting from any Contract implementation activity to the City and the appropriate U.S. EPA Regional Office.
2. Clean Water. You must comply with all applicable standards, orders, or regulations issued pursuant to the Federal Water Pollution Control Act, as amended, 33 USC §§ 1251 *et seq.* You further must report and require each Subcontractor at any tier to report any violation of these requirements resulting from any Contract implementation activity to the City and the appropriate U.S. EPA Regional Office.
3. List of Violating Facilities. You acknowledge that any facility to be used in the performance of the Contract or to benefit from the Contract must not be listed on the U.S. EPA List of Violating Facilities ("List"), and you must promptly notify the City if you receive any communication from the U.S. EPA that such a facility is under consideration for inclusion on the List.
4. Preference for Recycled Products. To the extent practicable and economically feasible and to the extent that it does not reduce or impair the quality of the Work, you must use recycled products in performance of the Contract pursuant to U.S. Environment Protection Agency (U.S. EPA) guidelines at 40 CFR Parts 247-253, which implement section 6002 of the Resource Conservation and Recovery Act, as amended, 42 USC § 6962.

H. Clean Diesel Fleet (Section 2-92-595 of the Chicago Municipal Code)

1. If this Contract is for construction, demolition, restoration, repair, renovation, environmental remediation, or environmental abatement of any building, structure, tunnel, excavation, roadway, bridge, transit station, or parcel of land and the estimated value of this Contract is $2,000,000 or more:

2. The Contractor must comply with the Clean Diesel Contracting Ordinance, Section 2-92-595 of the Municipal Code of Chicago.

3. The Contractor and any Subcontractor(s) must utilize Ultra Low Sulfur Diesel Fuel (ULSD) for any heavy-duty diesel-powered vehicle, non-road vehicle or non-road equipment used in the performance of the Contract.

4. The Contractor and any Subcontractor(s) must minimize idling of motor vehicles and non-road vehicles used in the performance of the Contract during periods of inactivity, and must comply with the anti-idling requirements imposed by any applicable federal, state, or local law.

5. The Contractor and any Subcontractor(s) may not use any of the following vehicles and equipment in the performance of the contract:

    a. any heavy-duty diesel vehicle not meeting or exceeding the US EPA's emission standards for heavy-duty diesel vehicles for the 1998 engine model year, unless such vehicle is fitted with a verified diesel emission control retrofit device; or

    b. any non-road vehicle or non-road equipment not meeting or exceeding the US EPA's Tier 1 Non-Road Diesel Standards, unless such vehicle or equipment is fitted with a verified diesel emission retrofit device.

6. Any heavy-duty diesel vehicles, non-road vehicles, and non-road equipment used in the performance of this Contract must incorporate such engine or retrofit technology so that the Contractor, through such engine or retrofit technology used directly by the Contractor and all subcontractors, shall have a minimum of 2.1 clean fleet score per a reporting period, as calculated by using the methodology described in MCC subsection 2-92-595(c)(5). Contractor may exclude from the calculation of the clean fleet score all of the heavy-duty diesel vehicles, non-road vehicles, and non-road equipment used in the performance of the contract during a reporting period that are owned or leased by any firm that the CPO has granted a clean fleet score annual waiver certificate pursuant to MCC subsection 2-92-595(f).

7. The City may conduct an audit of the Contractor or inspect any vehicle or equipment used in the performance of the Contract to ensure compliance with the requirements specified above. In the event that Contractor or any Subcontractor fails to utilize ULSD or fails to minimize idling or comply with anti-idling requirements, Contractor will be subject to liquidated damages of $5,000 per day for each violation and each day of noncompliance will be a separate violation; provided, however, the damages will not exceed $50,000 for any one vehicle or piece of equipment, as specified in Section 2-92-595(e) of the Municipal Code of Chicago. Such liquidated damages are imposed not as a penalty but as an estimate of the damages that the City will sustain from delay in completion of the project and inspection and inspection and other enforcement costs, as well as the resultant damages to the public health of its citizens, which damages by their nature are not capable of precise proof. The City is authorized to withhold and deduct from monies otherwise payable to the contractor the amount of liquidated damages due to the City.

8. Contractor understands that pursuant to Section 2-92-595(e)(6) of the Municipal Code of Chicago, any person knowingly making a false statement of material fact to any City department with respect to compliance with the contract provisions specified in Section 2-92-595(e) of the Municipal Code of Chicago may be fined not less than $1,000 or more than $5,000 for each statement.

XIX. INSURANCE, INDEMNITY AND BONDS

A. Indemnity

1. You must protect, defend, indemnify, and hold the City, its officers, officials, representatives, and employees (collectively the “Indemnitees"), harmless from and against any and all claims, damages, demands, injury or death, in consequence of granting this Contract or arising out of or being in any way connected with your performance under this Contract except for matters shown by final judgment to have been caused by or attributable to the negligence of Indemnitees. This indemnification obligation is effective to the maximum extent permitted by applicable law. This indemnity extends to all legal costs, including attorney fees, costs, liens, judgments, settlements, penalties, professional fees, and other expenses incurred by the City, including fines and penalties imposed by public bodies, and the reasonable settlement of such claims. This indemnification obligation is not limited by any amount of insurance required under this Contract. Further, the indemnification obligation contained in this section will survive the expiration or termination of this Contract.

2. You will be solely responsible for the defense of any and all claims, demands, or suits against Indemnitees, including claims by your employees, subcontractors, agents, or servants even though the claimant may allege that the Indemnitees were in charge of the Work or alleged negligence on the part of Indemnitees. The City will have the right, at its sole option, to participate in the defense of any such suit, without relieving you of your obligations under this section.

3. "Injury" or "damage" as these words are used in this section will be construed to include injury or damage consequent upon the failure of or use or misuse by you, your

Subcontractors, agents, servants, or employees, of any scaffolding, hoist cranes, stays, ladders, supports, rigging, blocking or any and all other kinds of items of equipment, whether or not they are owned, furnished, or loaned by the Indemnitees.

4. You will promptly provide, or cause to be provided, to the Commissioner and City Corporation Counsel copies of all notices that you may receive of any claims, actions, or suits that may be given or filed in connection with your performance or the performance of any Subcontractor and for which the Indemnitees are entitled to indemnification under this Contract and to give the Indemnitees authority, information and assistance for the defense of any claim or action.

B. Contribution

To the extent permissible by law, you waive any limits on your liability that you would otherwise have by virtue of the Worker's Compensation Act or any other related law or judicial decision (such as *Kotecki v. Cyclops Welding Corporation,* 146 Ill. 2d 155 (1991)). The City, however, does not waive any limitations it may have on its liability under the Worker's Compensation Act, the Illinois Pension Code or any other statute.

C. Admiralty

In addition, you waive the right to receive the benefits of or to invoke the protection afforded by all maritime statutory limitations of liability, including the Limitation of Vessel Owner's Liability Act, 48 U.S.C. § 183 *et seq.*, that could act to diminish your liability for any harm or damage arising from your performance of your obligations under the Contract in any manner or for all claims or other costs arising from or occasioned by your operations on any waterways, including Lake Michigan and the Chicago River. This provision is not intended to avoid or waive Federal jurisdiction under the applicable admiralty laws. This waiver extends only to the Indemnitees, and not to third parties seeking recovery for claims solely against you.

Without limiting your waiver, you specifically consent to pay all sums in respect of any claims against the Indemnitees and other costs suffered by the Indemnitees arising from or occasioned by your operations in or on waterways, including the following:

a. Loss or damage to any other ship, vessel or boat caused proximately or otherwise by your vessel, or loss of the cargo or the other ship, vessel or boat;

b. Loss of life or personal injury, or for any cost of life salvage;

c. Loss or damage to any harbor, dock, building, graving or otherwise, slipway, pontoon, pier, quay, tunnel, jetty, stage, buoy, cables of any kind, or other fixed or movable object or property whatsoever;

d. The cost of the removal, raising or destruction of the wreck of any vessel you employ in performing your obligations under the Contract;

e. If a vessel is disabled or otherwise, the cost of towage or other salvage of any vessel you employ in performing your obligations under the Contract;

f. Loss or damage to the bottom, banks, or shoreline of the waterway.

D. Performance and Payment Bonds

You must, before award of the Contract, deliver to the Chief Procurement Officer a performance and payment bond in the amount set forth in Book 2. Any performance bond that you provide must comply with the provisions of 30 ILCS 550/1 *et.seq.*, as amended, and of § 2-92-030 of the Municipal Code, as amended. It must also be in the form of the performance and payment bond form included in Book 2. The surety or sureties issuing the bond must be acceptable to the Comptroller and must have a Best's Key Rating Guide of "B+," Class XI or greater and be listed in the most recently published "Listing of Approved Sureties" of the U.S. Department of the Treasury Circular 570, with underwriting limitations in excess of the Contract Price. The bond must cover the warranty period required by the Contract.

In case of your neglect, failure, or refusal to provide satisfactory sureties when so directed within 10 days after such notification, pursuant to § 2-92-040 of the Municipal Code the Chief Procurement Officer may declare this Contract forfeit, but such forfeiture will not release you or your surety or sureties from any liability that may have accrued before the date of the forfeiture.

If at any time the surety or sureties, or any one of them, upon the bond become insolvent, or are, in the sole opinion of the Chief Procurement Officer, unsatisfactory, or unable to respond to damages in case of liability on such bond, the Chief Procurement Officer will notify you and direct that you furnish a bond issued by a satisfactory surety or sureties forthwith.

E. Insurance

You must procure and maintain at all times, at your own expense, through the completion of the warranty period, the types of insurance specified in Book 2 of the Contract, with insurance companies authorized to do business in the State of Illinois, covering all operations under this Contract, whether performed by you or by Subcontractors. Upon written request by the Commissioner, you must allow the Commissioner to review and copy any original insurance policies you are obligated to maintain under this policy.

You waive any and every claim or right of recovery from the City for all injuries and losses arising under this Contract or in any way related to the Work, including any claim for loss of or damage to the Work or to the contents of it, which injury, loss or damage is covered or is required to be covered by valid and collectible insurance policies, to the extent that such injury, loss or damage is recoverable under the insurance policies. As this waiver will preclude the assignment of any claim by subrogation (or otherwise) to an insurance company (or any other person), you must give each insurance company that has issued, or in the future may issue, your policies of insurance, written notice of the terms of this waiver, and to have the insurance policies properly endorsed, if necessary, to prevent the invalidation of insurance coverage by reason of the waiver. You must require each Subcontractor to include similar waivers of subrogation in favor of the City.

The City reserves the right to change, modify or delete insurance requirements set forth in the Contract, including the right to request that you provide additional types of insurance.

XX. CLAIMS AND DISPUTES

A. General

Compliance with the provisions in this Article XX is a precondition to seeking judicial review of an adverse decision of the Chief Procurement Officer. **You must not withhold performance of and must prosecute any Work required by the Commissioner while your claim, including judicial resolution, if any, is pending. You must prosecute all of your Work including any disputed Work with the same diligence and effort as if no dispute existed.** Neither the Chief Procurement Officer's determination (*see* Section XX.C.3 below), nor the continued performance by either party, constitutes an admission as to any factual and/or legal position in connection with the dispute or a waiver of any rights under the Contract.

B. Claims

1. This provision applies to all claims under this Contract, including those for time, money, or both.
2. Procedures. Within 14 days after a basis for claim arises, you must submit your claim in writing to the City's resident engineer or its project manager ("Commissioner's Representative). This written claim to the Commissioner's Representative will constitute "notice" to the City for purposes of determining initial timeliness of the claim; oral notice is insufficient. If you and the Commissioner's Representative are unable promptly (depending upon the complexity of the matter) to resolve the claim, you must forward your claim in writing to the Commissioner together with the documents listed in (a) through (d) below (collectively, "your documents"). You must include:
    a. A general statement of the basis for the claim,
    b. Reference to the applicable Contract provisions,
    c. All records that support the claim, and
    d. All documents that relate to it, such as correspondence, and that are reasonably necessary for the Commissioner's understanding to resolve the claim.

    It is your responsibility to furnish your documents to the Commissioner at the time you forward the claim to him, as, with or without the supporting documentation, the Commissioner has 30 days to respond in writing to you after he has received the claim. Incomplete information may result in an adverse response. The response may be in the form of a contract modification.

    If within the 30 days the Commissioner neither responds nor forwards the claim to the Chief Procurement Officer in lieu of responding, the claim will be considered denied, unless you and the Commissioner have agreed to extend the time for him to complete his response. The Commissioner may, at his sole option, forgo the opportunity to respond directly to your claim by referring it with all your documentation and a Request for Resolution of Dispute to the Chief Procurement Officer and supplying such additional documentation as the Chief Procurement Officer may require of him.

C. Disputes

1. Invoking Dispute Resolution Procedures. If you dispute the Commissioner's resolution or denial of your claim, or if your claim is deemed denied, you have 10 days to forward your claim and your documentation to the Chief Procurement Officer indicating to him that you are requesting resolution of a dispute and showing that you have complied with the preceding claims procedures. Your 10-day period to invoke dispute resolution by the Chief Procurement Officer is counted from the date the Commissioner's written resolution was sent to you, or, if he has not responded or forwarded the claim, from the date on which the time for the Commissioner's response lapsed.

2. Waiver. If you fail to file a Request for Resolution of Dispute with the Chief Procurement Officer within the 10-day period you will have waived your claim, the right to make the claim later, and the right to dispute its resolution or denial.

3. Dispute Procedures. Once the dispute resolution procedures are invoked, the Chief Procurement Officer will proceed to a final and binding decision under such rules and regulations as he from time to time promulgates. A copy of those rules and/or regulations is available through the Department of Procurement Services. The Chief Procurement Officer's decision will be implemented through a Contract Modification, if required, that will be made a part of the Contract with your signature or without it should you refuse to sign the Contract Modification. If either you or the Commissioner disagree(s) with the decision of the Chief Procurement Officer, the exclusive remedy is judicial review by a common law *writ of certiorari*. Unless such review is sought within 35 days of receipt of the Chief Procurement Officer's decision, all rights to seek judicial review are waived.

XXI. EVENTS OF DEFAULT AND TERMINATION

A. Chief Procurement Officer's Right

1. The Chief Procurement Officer may, at his sole discretion, exercise the right to send you notice under Sections XXI.C.1 or XXI.C.2. Whether to declare you in default is within the sole discretion of the Chief Procurement Officer and neither that decision nor the factual basis for it is subject to review or challenge under Article XI, "Claims and Disputes."

2. If the Chief Procurement Officer terminates this Contract under the provisions of Section XXI.C.1 or XXI.C.2, the Commissioner may use the material and equipment, whether owned or leased, that is within the scope of the Work or necessary for completion of the Work paid for by the City (whether located on or off the Work site), to complete the Work and you will receive no further payment until the Work is completed. If, however, the cost of completion exceeds the unpaid balance of the Contract, you must pay the difference to the City immediately upon demand.

B. Events of Default

Your failure to perform any of your obligations under the Contract, including one or more of the following, is an event of default:

1. Failure to begin the Work at the time specified;
2. Failure to perform the Work with sufficient workers and equipment or with sufficient materials to insure the completion of Work or any part of the Work within the time specified by the Contract;
3. Failure to perform the Work in accordance with the Contract;
4. Failure to promptly remove materials, repair, or replace Work that was or were rejected as defective or unsuitable;
5. Unauthorized discontinuation of the Work;
6. Insolvency, bankruptcy or assignment for the benefit of creditors that impairs your ability to pay Subcontractors or perform the Work;
7. Failure to pay Subcontractors or material suppliers;
8. Failure to carry on the Work in a manner acceptable to the Commissioner;
9. Failure to observe Federal, State, or local laws or regulations governing safety and security requirements, including all environmental requirements;
10. Failure to comply with any other term of this Contract that states an event of default or failure to comply with any term of this Contract in any material respect; and
11. Failure to identify disposal site(s) for materials, construction debris, soil and other wastes or to submit such information when requested by the Chief Procurement Officer.
12. Failure to notify City of change in information submitted in Contractor's original Economic Disclosure Statement ("EDS") and to submit a new EDS;
13. Default under any other City contract;
14. Violation of any City ordinance, even if unrelated to contract performance.

C. Remedies

If an event of default occurs, the Chief Procurement Officer, at his sole discretion, may send you notice of his intent to exercise remedies pursuant to the following:

1. Opportunity to Cure: The Chief Procurement Officer may provide you the opportunity to cure the default. If he does so, you must cure the default within 10 days after notice from the Chief Procurement Officer is given. If the Chief Procurement Officer receives written notification from the Commissioner that you have not cured the default within the 10-day cure period, the Chief Procurement Officer may at any time after that terminate the Contract, in which event the termination of the Contract is final and effective.
2. Termination: The Chief Procurement Officer may terminate the Contract. Written notification of the default and termination of the Contract will be provided to you and the bond company by the Chief Procurement Officer. The Chief Procurement Officer's decision and declaration of termination is final and effective.
3. In addition to the foregoing, upon an event of default as defined in Section XXI.B, "Events of Default," the City may invoke any or all of the following remedies:

a. The right of set-off against any payments due or to become due to you and against any retainage;

b. The right to take over and complete the Work, or any part of it, either directly or through others. The City may use your Subcontractors, materials and equipment to complete the Work. If the City notifies you that it is invoking this remedy, all rights you may have in or under your subcontracts are assigned to the City, subject to the City's right to take assignment of all or only selected subcontracts, at the City's discretion. The sole obligation accepted by the City under such subcontracts is to pay for Work satisfactorily performed after the date of the assignment. In the event a conditional assignment has not been executed, you must execute, or cause to be executed, any assignment, agreement, or other document that may be necessary, in the sole opinion of the Corporation Counsel, to evidence or effect compliance with this provision. You must promptly deliver such documents upon the City's request. In the case of any subcontract so assigned and accepted by the City, you remain liable to the Subcontractors for any payment already invoiced to and paid by the City, and for any claim, suit, or cause of action based on or resulting from any error, omission, negligence, fraud, willful or intentionally tortious conduct, or any other act or omission, or breach of Contract, by you, your officers, employees, agents, and other Subcontractors, arising before the date of assignment to the City, when such claim, suit, or cause of action has not been discharged, disposed of, or otherwise resolved as of that date. You must notify your Subcontractors of these requirements;

c. In the event of termination, all costs and changes incurred by the City, together with the cost of completing the Work, are deducted from any moneys due or that may become due to you. When the expense incurred by the City exceeds the sum that would have been payable under the Contract, you and the surety are liable and must pay to the City the amount of the excess;

d. The right to terminate the Contract as to any or all of the Work yet to be performed;

e. The right of specific performance, an injunction, or any other appropriate equitable remedy, as may be applicable;

f. The right to money damages, including all expert witness or other consultant fees, court costs, and attorneys' fees that the City may incur in connection with any claim, suit, or action based upon, related to, or arising from, directly or indirectly, an event of default under this Contract;

g. The right to withhold all or any part of your compensation;

h. The right to terminate any or all of any other contracts that you may have with the City; and

i. The right to deem you non-responsible in future contracts to be awarded by the City.

D. Nonexclusivity of Remedies

The remedies under the terms of this Contract are not intended to be exclusive of any other remedies provided, but each and every such remedy is cumulative and is in addition to any other remedies, existing now or hereafter, at law, or in equity. No delay or omission to exercise any right or power accruing upon any event of default impairs any such right or power, nor constitutes a waiver of any event of default or acquiescence in it, and every such right and power may be exercised from time to time and as often as may be deemed expedient.

E. Adjudication of Termination

If the Contract is terminated by the City for cause and it is subsequently determined by a court of competent jurisdiction that the termination was without cause, the termination will thereupon be deemed under Section XXI.F, "Early Termination," and the provisions of Section XXI.F, "Early Termination," apply.

F. Early Termination

1. The City, through the Chief Procurement Officer, may terminate your Work by written notice stating the effective date of the termination. Immediately upon receipt of the notice, you must provide similar written notice to the affected Subcontractor(s), whereupon you and Subcontractor(s) must, except for services necessary for the orderly termination of the Work.
    a. Stop all Work and place no further order or subcontracts for materials, services, equipment or supplies;
    b. Assign to the City, in the manner and to the extent directed, all of your rights under Work orders, purchase orders and subcontracts relating to the portion of the Work that has been completed;
    c. Terminate Work orders, purchase orders and subcontracts outstanding to the extent that they relate to the Work and are not assigned to the City;
    d. Take any action necessary to protect property in your possession in which the City has or may acquire an interest; and
    e. Take any other action toward termination of the Work that the City may direct.
2. If all or a portion of your Work is terminated under this Section, "Early Termination," you are entitled to payment of those costs relating to the completed portion of the Work. No payment will be made for Work not actually performed. Deductions will be made by the City for any amounts previously paid to you and for any amounts that may be due the City, or that the City may offset or withhold by the terms of this Contract. Thus, the City will pay you, subject to the limitations set forth in this Contract, the sum of the following costs:
    a. That portion of the Contract Price related to the Work you completed immediately before notice of termination less the payments for progress or changes previously made; and

b. Expenses incurred for which you are liable as the result of your termination of respective Work orders, purchase orders or subcontracts related to the notice of termination. The total amount of all payments to you must not, in any event, exceed the proportion that the Work actually performed (including materials delivered to the Project site minus credits for returned goods or canceled orders) at the date of termination bears to the entire Work to be performed under this Contract. Any payment to you under this subsection will be made in accordance with the provisions of Article XII, "Payments."

3. After receipt of a notice of termination under this Section XXI.F, "Early Terminations," you must submit to the Commissioner your final invoice in the form required, with supporting documentation. The Commissioner may require certified payrolls, receipts and other proof of expenditures. The final invoice must be submitted promptly, but in no event more than 60 days after the effective date of termination. Failure to submit the final invoice within 60 days after the effective date of termination constitutes a waiver of the final invoice.

G. Non-Appropriation

If no funds or insufficient funds are appropriated and budgeted in any fiscal period of the City for payments to be made under this Contract, then the City will notify you of that occurrence and this Contract will terminate on the earlier of the last day of the fiscal period for which sufficient appropriation was made or whenever the funds appropriated for payment under this Contract are exhausted. No payments will be made to you under this Contract beyond those amounts appropriated and budgeted by the City to fund payments under it.

XXII. COMPLIANCE WITH ALL LAWS

A. Contractor Must Comply with All Laws

Contractor must observe and comply with all Applicable Laws, in effect now or later and whether or not they appear in the Agreement, including those specifically referenced herein or in any of the Contract Documents. Contractor must pay all taxes and obtain all licenses, certificates and other authorizations required in connection with the performance of its obligations hereunder, and Contractor must require all subcontractors to do so. Contractor is fully responsible for ascertaining and complying with all agency and code requirements applicable to the Work.

By entering into this Contract with the City, Contractor certifies to the best of its knowledge and belief that it, its principals and any subcontractors used in the performance of this contract, meet City requirements and have not violated any City or sister agency policy, codes, state, federal, or local laws, rules or regulations and have not been subject to any debarment, suspension or other disciplinary action by any government agency. Additionally, if at any time the contractor becomes aware of such information, it must immediately disclose it to the City.

B. Civil Rights Act of 1964, Title VI, Compliance With Nondiscrimination Requirements

During the performance of this contract, the contractor, for itself, its assignees, and successors in interest (hereinafter referred to as the "contractor") agrees as follows:

1. Compliance with Federal Nondiscrimination Requirements

The contractor will comply with federal nondiscrimination laws, regulations, and authorities, as they may be amended from time to time (Acts and Regulations), which include:

- Title VI of the Civil Rights Act of 1964 (42 U.S.C. § 2000d et seq., 78 stat. 252), (prohibits discrimination on the basis of race, color, national origin);
- 49 CFR part 21 (Non-discrimination In Federally-Assisted Programs of The Department of Transportation—Effectuation of Title VI of The Civil Rights Act of 1964);
- Section 504 of the Rehabilitation Act of 1973, (29 U.S.C. § 794 et seq.), as amended, (prohibits discrimination on the basis of disability); and 49 CFR part 27;
- The Age Discrimination Act of 1975, as amended, (42 U.S.C. § 6101 et seq.), (prohibits discrimination on the basis of age);
- The Civil Rights Restoration Act of 1987, (PL 100-209), (Broadened the scope, coverage and applicability of Title VI of the Civil Rights Act of 1964, The Age Discrimination Act of 1975 and Section 504 of the Rehabilitation Act of 1973, by expanding the definition of the terms “programs or activities” to include all of the programs or activities of the Federal-aid recipients, sub-recipients and contractors, whether such programs or activities are Federally funded or not);
- Titles II and III of the Americans with Disabilities Act of 1990, which prohibit discrimination on the basis of disability in the operation of public entities, public and private transportation systems, places of public accommodation, and certain testing entities (42 U.S.C. §§ 12131 – 12189) as implemented by Department of Transportation regulations at 49 CFR parts 37 and 38;
- Executive Order 12898, Federal Actions to Address Environmental Justice in Minority Populations and Low-Income Populations, which ensures non-discrimination against minority populations by discouraging programs, policies, and activities with disproportionately high and adverse human health or environmental effects on minority and low-income populations;
- Executive Order 13166, Improving Access to Services for Persons with Limited English Proficiency, and resulting agency guidance, national origin discrimination under Title VI includes discrimination because of limited English proficiency (LEP). (70 Fed. Reg. at 74087 to 74100);
- Title IX of the Education Amendments of 1972, as amended, prohibits discrimination because of sex in education programs or activities (20 U.S.C. 1681 et seq);

- The Uniform Relocation Assistance and Real Property Acquisition Policies Act of 1970, (42 U.S.C. § 4601), (prohibits unfair treatment of persons displaced or whose property has been acquired because of Federal or Federal-aid programs and projects);
- Airport and Airway Improvement Act of 1982, (49 USC § 471, Section 47123), as amended, (prohibits discrimination based on race, religion, color, national origin, or sex in any activity carried out with a grant from the FAA).

2. Non-discrimination

The contractor, with regard to the work performed by it during the contract, will not discriminate on the grounds of race, color, or national origin in the selection and retention of subcontractors, including procurements of materials and leases of equipment. The contractor will not participate directly or indirectly in the discrimination prohibited by the Acts and the Regulations, including employment practices when the contract covers any activity, project, or program set forth in Appendix B of 49 CFR part 21 (Nondiscrimination in Federally-Assisted Programs of the US Department of Transportation).

3. Solicitations for Subcontracts, Including Procurements of Materials and Equipment

In all solicitations, either by competitive bidding, or negotiation made by the contractor for work to be performed under a subcontract, including procurements of materials, or leases of equipment, each potential subcontractor or supplier will be notified by the contractor of the contractor's obligations under this contract and the Acts and the Regulations relative to Non-discrimination on the grounds of race, color, or national origin.

4. Information and Reports

The contractor will provide all information and reports required by the Acts, the Regulations, and directives issued pursuant thereto and will permit access to its books, records, accounts, other sources of information, and its facilities as may be determined by the City or applicable federal agency (e.g. Federal Aviation Administration, Federal Highway Administration, Federal Transit Authority, Transportation Security Administration, Department of Housing and Urban Development, etc.) providing funding to the City department(s) on this contract to be pertinent to ascertain compliance with such Acts, Regulations, and instructions. Where any information required of a contractor is in the exclusive possession of another who fails or refuses to furnish the information, the contractor will so certify to the sponsor or the federal agency, as appropriate, and will set forth what efforts it has made to obtain the information.

5. Sanctions for Noncompliance

In the event of a contractor's noncompliance with the Non-discrimination provisions of this contract, the City will impose such contract sanctions as it or the relevant federal funding agency may determine to be appropriate, including, but not limited to:

A. Withholding payments to the contractor under the contract until the contractor complies; and/or

B. Cancelling, terminating, or suspending a contract, in whole or in part.

6. Incorporation of Provisions

The contractor will include the provisions of above paragraphs 1, "Compliance With Regulations" through 6. "Incorporation of Provisions" in every subcontract, including procurements of materials and leases of equipment, unless exempt by the Acts, the Regulations and directives issued pursuant thereto. The contractor will take action with respect to any subcontract or procurement as the sponsor or the applicable federal agency may direct as a means of enforcing such provisions including sanctions for noncompliance. Provided, that if the contractor becomes involved in, or is threatened with litigation by a subcontractor, or supplier because of such direction, the contractor may request the sponsor to enter into any litigation to protect the interests of the sponsor. In addition, the contractor may request the United States to enter into the litigation to protect the interests of the United States.

7. Other Non-Discrimination Requirements

a. Illinois Human Rights Act

Contractor must comply with the Illinois Human Rights Act, 775 ILCS 5/1-1 01 et seq., as amended and any rules and regulations promulgated in accordance therewith, including, but not limited to the Equal Employment Opportunity Clause, 44 III. Admin. Code 750 Appendix A.

Contractor must comply with the Public Works Employment Discrimination Act, 775 ILCS 10/0.01 et seq., as amended; and all other applicable state laws, rules, regulations and executive orders.

b. Chicago Human Rights Ordinance MCC Ch. 2-160

Contractor must comply with the Chicago Human Rights Ordinance, MCC Ch. 2-160, Sect. 2-160-010 et seq., as amended; and all other applicable municipal code provisions, rules, regulations and executive orders.

Contractor must furnish or shall cause each of its Subcontractors to furnish such reports and information as requested by the Chicago Commission on Human Relations.

c. State of Illinois Equal Employment Opportunity Clause

In the event of the Contractor's non-compliance with the provisions of this Equal Employment Opportunity Clause or the Illinois Human Rights Act, the Contractor may be declared ineligible for future contracts or subcontracts with the State of Illinois or any of its political subdivisions or municipal corporations, and the contract may be cancelled or voided in whole or in part, and other sanctions or penalties may be imposed or remedies invoked as provided by statute or regulation. During the performance of this contract, the Contractor agrees as follows:

A) That Contractor will not discriminate against any employee or applicant for employment because of race, color, religion, sex, sexual orientation, marital status, order of protection status, national origin or ancestry, citizenship status, age, physical or mental disability unrelated to ability, military status or an unfavorable discharge from military service; and,

further, that he or she will examine all job classifications to determine if minority persons or women are underutilized and will take appropriate affirmative action to rectify any underutilization.

B) That, if Contractor hires additional employees in order to perform this contract or any portion of this contract, Contractor will determine the availability (in accordance with 44 III. Admin. Code Part 750) of minorities and women in the areas from which Contractor may reasonably recruit and Contractor will hire for each job classification for which employees are hired in a way that minorities and women are not underutilized.

C) That, in all solicitations or advertisements for employees placed Contractor or on Contractor's behalf, Contractor will state that all applicants will be afforded equal opportunity without discrimination because of race, color, religion, sex, sexual orientation, marital status, order of protection status, national origin or ancestry, citizenship status, age, physical or mental disability unrelated to ability, military status or an unfavorable discharge from military service.

D) That Contractor will send to each labor organization or representative of workers with which Contractor has or is bound by a collective bargaining or other agreement or understanding, a notice advising the labor organization or representative of the Contractor's obligations under the Illinois Human Rights Act and 44 III. Admin. Code Part 750. If any labor organization or representative fails or refuses to cooperate with the Contractor in Contractor's efforts to comply with the Act and this Part, the Contractor will promptly notify the Illinois Department of Human Rights and the City and will recruit employees from other sources when necessary to fulfill its obligations under the contract.

E) That Contractor will submit reports as required by 44 III. Admin. Code Part 750, furnish all relevant information as may from time to time be requested by the Illinois Department of Human Rights or the City, and in all respects comply with the Illinois Human Rights Act and 44 III. Admin. Code Part 750.

F) That Contractor will permit access to all relevant books, records, accounts and work sites by personnel of the City and the Illinois Department of Human Rights for purposes of investigation to ascertain compliance with the Illinois Human Rights Act and the Illinois Department of Human Rights's Rules and Regulations.

G) That Contractor will include verbatim or by reference the provisions of this clause in every subcontract awarded under which any portion of the contract obligations are undertaken or assumed, so that the provisions will be binding upon the subcontractor. In the same manner as with other provisions of this contract, the Contractor will be liable for compliance with applicable provisions of this clause by subcontractors; and further it will promptly notify the City and the Illinois Department of Human Rights in the event any subcontractor fails or refuses to comply with the provisions. In addition, the

Contractor will not utilize any subcontractor declared by the Illinois Human Rights Commission to be ineligible for contracts or subcontracts with the State of Illinois or any of its political subdivisions or municipal corporations.

C. Business Relationships with Elected Officials

Pursuant to Section 2-156-030(b) of the Municipal Code, it is illegal for any elected official, or any person acting at the direction of such official, to contact either orally or in writing any other City official or employee with respect to any matter involving any person with whom the elected official has any business relationship that creates a financial interest on the part of the official, or the domestic partner or spouse of the official, or from whom or which he has derived any income or compensation during the preceding twelve months or from whom or which he reasonably expects to derive any income or compensation in the following twelve months. In addition, no elected official may participate in any discussion in any City Council committee hearing or in any City Council meeting or vote on any matter involving the person with whom the elected official has any business relationship that creates a financial interest on the part of the official, or the domestic partner or spouse of the official, or from whom or which he has derived any income or compensation during the preceding twelve months or from whom or which he reasonably expects to derive any income or compensation in the following twelve months.

Violation of Section 2-156-030 of the Municipal Code by any elected official with respect to this contract will be grounds for termination of this contract. The term financial interest is defined as set forth in Chapter 2-156 of the Municipal Code.

D. Inspector General and Legislative Inspector General

It is the duty of any bidder, proposer or Contractor, all Subcontractors, every applicant for certification of eligibility for a City contract or program, and all officers, directors, agents, partners and employees of any bidder, proposer, Contractor, Subcontractor or such applicant to cooperate with the Inspector General or the Legislative Inspector General in any investigation or hearing, if applicable, undertaken pursuant to Chapter 2-56 or 2-55 of the Municipal Code, respectively. Contractor understands and will abide by all provisions of Chapters 2-56 and 2-55.

All subcontracts must inform Subcontractors of this provision and require understanding and compliance with them.

E. Governmental Ethics Ordinance

As required by § 2-156-120 of the Municipal Code, no payment, gratuity or offer of employment shall be made in connection with any city contract, by or on behalf of a subcontractor to the prime contractor or higher-tier subcontractor or any person associated therewith, as an inducement for the award of a subcontract or order.

F. False Statements

False statements made in connection with this Agreement, including statements in, omissions from and failures to timely update the EDS, as well as in any other affidavits,

statements or contract documents constitute a material breach of the Agreement (each a "Disclosure Misrepresentation"). Any such Disclosure Misrepresentation renders the Agreement voidable at the option of the City, notwithstanding any prior review or acceptance by the City of any materials containing a Disclosure Misrepresentation. In addition, the City may debar Contractor, assert any contract claims or seek other civil or criminal remedies as a result of a Disclosure Misrepresentation (including costs of replacing a terminated Contractor pursuant to Chicago Municipal Ordinance 1-21-010.

G. Americans with Disabilities Act

Contractor must perform all construction or alteration that Contractor undertakes in connection with this Contract in compliance with all federal, state and local laws and regulations regarding accessibility standards for disabled or environmentally limited persons including: Americans with Disabilities Act, P.L. 101-336 (1990) and the Uniform Federal Accessibility Standards ("UFAS") or the American with Disabilities Act ("ADA") and; the Illinois Environmental Barriers Act, 410 ILCS 25/1 *et seq.* (1991), and the regulations promulgated with them. If the above cited standards are inconsistent, Contractor must comply with the standard providing greater accessibility.

H. Prohibition on Certain Contributions – Mayoral Executive Order 2011-4

No Contractor or any person or entity who directly or indirectly has an ownership or beneficial interest in Contractor of more than 7.5% ("Owners"), spouses and domestic partners of such Owners, Contractor's Subcontractors, any person or entity who directly or indirectly has an ownership or beneficial interest in any Subcontractor of more than 7.5% ("Sub-owners") and spouses and domestic partners of such Sub-owners (Contractor and all the other preceding classes of persons and entities are together, the "Identified Parties"), shall make a contribution of any amount to the Mayor of the City of Chicago (the "Mayor") or to his political fundraising committee during (i) the bid or other solicitation process for this Contract or Other Contract, including while this Contract or Other Contract is executory, (ii) the term of this Contract or any Other Contract between City and Contractor, and/or (iii) any period in which an extension of this Contract or Other Contract with the City is being sought or negotiated.

Contractor represents and warrants that since the date of public advertisement of the specification, request for qualifications, request for proposals or request for information (or any combination of those requests) or, if not competitively procured, from the date the City approached the Contractor or the date the Contractor approached the City, as applicable, regarding the formulation of this Contract, no Identified Parties have made a contribution of any amount to the Mayor or to his political fundraising committee.

Contractor shall not: (a) coerce, compel or intimidate its employees to make a contribution of any amount to the Mayor or to the Mayor's political fundraising committee; (b) reimburse its employees for a contribution of any amount made to the Mayor or to the Mayor's political fundraising committee; or (c) bundle or solicit others to bundle contributions to the Mayor or to his political fundraising committee.

The Identified Parties must not engage in any conduct whatsoever designed to intentionally violate this provision or Mayoral Executive Order No. 2011-4 or to entice, direct or solicit others to intentionally violate this provision or Mayoral Executive Order No. 2011-4.

Violation of, non-compliance with, misrepresentation with respect to, or breach of any covenant or warranty under this provision or violation of Mayoral Executive Order No. 2011-4 constitutes a breach and default under this Contract, and under any Other Contract for which no opportunity to cure will be granted. Such breach and default entitles the City to all remedies (including without limitation termination for default) under this Contract, under Other Contract, at law and in equity. This provision amends any Other Contract and supersedes any inconsistent provision contained therein.

If Contractor violates this provision or Mayoral Executive Order No. 2011-4 prior to award of the Contract resulting from this specification, the CPO may reject Contractor's bid.

For purposes of this provision:

"Other Contract" means any agreement entered into between the Contractor and the City that is (i) formed under the authority of MCC Ch. 2-92; (ii) for the purchase, sale or lease of real or personal property; or (iii) for materials, supplies, equipment or services which are approved and/or authorized by the City Council.

"Contribution" means a "political contribution" as defined in MCC Ch. 2-156, as amended.

I. Licensing of General Contractors

Important: The failure to comply with the provisions of Chapter 4-36 of the Municipal Code ("Chapter 4-36") may result in ineligibility to bid, inability to perform (or continue) to work, imposition of substantial fines, and/or in the City's revoking the Bidder's "general contractor" license. Information about Chapter 4-36 and application forms are available on the City's website, www.cityofchicago.org. A copy of the entire ordinance is provided in Book 2 of this contract.

As stated elsewhere in the specification, the City reserves the right to reject any or all bids.

Bidder must be in compliance with the requirements of Chapter 4-36, in the appropriate license class commensurate with the size of this project, if the license is required for the scope of work, **at the time Bidder submits its bid** and, if it is awarded a contract, throughout the term of the contract.

Contractor's failure to be licensed as a "general contractor" at all times throughout the term of the contract, if the license is required for the scope of work, is an **event of default** under the Agreement and the City may exercise any and all rights and remedies permitted under the contract, at law, or in equity.

J. Buy America

Contractor must ensure that, to the extent applicable, Work provided under this Contract complies with any Buy America provisions of the federal government and/or any similar provisions of the State or City.

K. Steel Products

Unless otherwise provided in the Steel Products Procurement Act, 30 ILCS 565/1 *et seq.*, steel products used or supplied in the performance of this contract or any subcontract to this contract must be manufactured or produced in the United States. Knowing violation of this law may result in the filing and prosecution of a complaint by the Attorney General of the State of Illinois and will subject violators to a fine of the greater of $5,000 or the payment price received as a result of such violation.

L. No Waste Disposal in Public Way MCC 11-4-1600(e)

Contractor warrants and represents that it, and to the best of its knowledge, its Subcontractors have not violated and are not in violation of the following sections of the Code (collectively, the Waste Sections):

7-28-390 Dumping on public way;
7-28-440 Dumping on real estate without permit;
11-4-1410 Disposal in waters prohibited;
11-4-1420 Ballast tank, bilge tank or other discharge;
11-4-1450 Gas manufacturing residue;
11-4-1500 Treatment and disposal of solid or liquid waste;
11-4-1530 Compliance with rules and regulations required;
11-4-1550 Operational requirements; and
11-4-1560 Screening requirements.

During the period while this Contract is executory, Contractor's or any Subcontractor's violation of the Waste Sections, whether or not relating to the performance of this Contract, constitutes a breach of and an event of default under this Contract, for which the opportunity to cure, if curable, will be granted only at the sole discretion of the CPO. Such breach and default entitles the City to all remedies under the Contract, at law or in equity.

This section does not limit the Contractor's and its Subcontractors' duty to comply with all applicable federal, state, county and municipal laws, statutes, ordinances and executive orders, in effect now or later, and whether or not they appear in this Contract.

Non-compliance with these terms and conditions may be used by the City as grounds for the termination of this Contract, and may further affect the Contractor's eligibility for future contract awards. The opportunity to cure, if curable, will be granted only at the sole discretion of the Chief Procurement Officer. Such breach and default entitles the City to all remedies under the Contract, at law or in equity.

M. Deemed Inclusion Provisions required by Applicable Law to be inserted in the Agreement are deemed inserted in the Agreement whether or not they appear in the Agreement or, upon application by either party, the Agreement will be amended to make the insertion; however, in no event will the failure to insert the provisions before or after the Agreement is signed prevent its enforcement.

N. Firms Owned or Operated by People with Disabilities

The City encourages Contractors to use Subcontractors that are firms owned or operated by individuals with disabilities, as defined by Section 2-92-586 of the Municipal Code of the City of Chicago, where not otherwise prohibited by Federal of State law.

O. 2014 City Hiring Plan Prohibitions

1. The City is subject to the June 16, 2014 "City of Chicago Hiring Plan" (the "2014 City Hiring Plan") entered in Shakman v. Democratic Organization of Cook County, Case No 69 C 2145 (United States District Court for the Northern District of Illinois). Among other things, the 2014 City Hiring Plan prohibits the City from hiring persons as governmental employees in non-exempt positions on the basis of political reasons or factors.

2. Contractor is aware that City policy prohibits City employees from directing any individual to apply for a position with Contractor, either as an employee or as a subcontractor, and from directing Contractor to hire an individual as an employee or as a Subcontractor. Accordingly, Contractor must follow its own hiring and contracting procedures, without being influenced by City employees. Any and all personnel provided by Contractor under this Contract are employees or Subcontractors of Contractor, not employees of the City of Chicago. This Contract is not intended to and does not constitute, create, give rise to, or otherwise recognize an employer-employee relationship of any kind between the City and any personnel provided by Contractor.

3. Contractor will not condition, base, or knowingly prejudice or affect any term or aspect of the employment of any personnel provided under this Contract, or offer employment to any individual to provide services under this Contract, based upon or because of any political reason or factor, including, without limitation, any individual's political affiliation, membership in a political organization or party, political support or activity, political financial contributions, promises of such political support, activity or financial contributions, or such individual's political sponsorship or recommendation. For purposes of this Contract, a political organization or party is an identifiable group or entity that has as its primary purpose the support of or opposition to candidates for elected public office. Individual political activities are the activities of individual persons in support of or in opposition to political organizations or parties or candidates for elected public office.

4. In the event of any communication to Contractor by a City employee or City official in violation of paragraph 2 above, or advocating a violation of paragraph C above, Contractor will, as soon as is reasonably practicable, report such communication to the Hiring Oversight Section of the City's Office of the Inspector General, and also to the head of the relevant City Department utilizing services provided under this Contract. Contractor will also cooperate with any inquiries by OIG Hiring Oversight.

P. Duty to Report Corrupt Activity

Pursuant to MCC 2-156-018, it is the duty of the Contractor to report to the Inspector General, directly and without undue delay, any and all information concerning conduct which it knows to involve corrupt activity. “Corrupt activity” means any conduct set forth in Subparagraph (a)(1), (2) or (3) of Section 1-23-020 of the MCC. Knowing failure to make such a report will be an event of default under this Contract. Reports may be made to the Inspector General’s toll free hotline, 866-IG-TIPLINE (866-448-4754).

Q. Equal Pay

The Contractor will comply with all applicable provisions of the Equal Pay Act of 1963, 29 U.S.C. 206(d) and the Illinois Equal Pay Act of 2003, 820 ILCS 112/1, et seq., as amended, and all applicable related rules and regulations including but not limited to those set forth in 29 CFR Part 1620 and 56 Ill. Adm. Code Part 320.

R. Economic Disclosure Statement and Affidavit and Appendix A ("EDS")

Pursuant to MCC Ch. 2-154 and 65 ILCS 5/8-10-8.5 any person, business entity or agency submitting a bid or proposal to or contracting with the City of Chicago will be required to complete the Disclosure of Ownership Interests in the EDS. Failure to provide complete or accurate disclosure will render this Contract voidable by the City.

Contractors must complete an online EDS prior to the Bid Opening Date. Contractors are responsible for notifying the City and updating their EDS any time there is a change in circumstances that makes any information provided or certification made in an EDS inaccurate, obsolete or misleading. Failure to so notify the City and update the EDS is grounds for declaring the Contractor in default, terminating the Contract for default, and declaring the Contractor ineligible for future contracts.

Contractor makes certain representations and certifications that the City relies on in its decision to enter into a contract. The Laws and requirements that are addressed in the EDS include the following:

1. MCC 1-23 and 720 ILCS 5/33E Bribery, Debts, and Debarment Certification

The Contractor or each joint venture partner, if applicable, must complete the appropriate subsections in the EDS which certify that the Contractor or each joint venture partner, its agents, employees, officers and any subcontractors (a) have not been engaged in or been convicted of bribery or attempted bribery of a public officer or employee of the City of Chicago, the State of Illinois, any agency of the federal government or any state or local government in the United States or engaged in or been convicted of bid-rigging or bid-rotation activities as defined in this section as required by the Illinois Criminal Code; (b) do not owe any debts to the State of Illinois, in accordance with 65 ILCS 5/11-42.1-1 and (c) are not presently debarred or suspended; Certification Regarding Environmental Compliance; Certification Regarding Ethics and Inspector General; and Certification Regarding Court-Ordered Child Support Compliance.

Contractor, in performing under this contract shall comply with MCC Sect. 2-92-320, as follows:

No person or business entity shall be awarded a contract or sub-contract if that person or business entity: (a) has been convicted of bribery or attempting to bribe a public officer or employee of the City of Chicago, the State of Illinois, or any agency of the federal government or of any state or local government in the United States, in that officers or employee's official capacity; or (b) has been convicted of agreement or collusion among bidders or prospective bidders in restraint of freedom of competition by agreement to bid a fixed price, or otherwise; or (c) has made an admission of guilt of such conduct described in (a) or (b) above which is a matter of record but has not been prosecuted for such conduct.
For purposes of this section, where an official, agent or employee of a business entity has committed any offense under this section on behalf of such an entity and pursuant to the direction or authorization of a responsible official thereof, the business entity will be chargeable with the conduct.

One business entity will be chargeable with the conduct of an affiliated agency. Ineligibility under this section will continue for three (3) years following such conviction or admission. The period of ineligibility may be reduced, suspended, or waived by the CPO under certain specific circumstances. Reference is made to Section 2-92-320 for a definition of affiliated agency, and a detailed description of the conditions which would permit the CPO to reduce, suspend, or waive the period of ineligibility.

Failure by the Contractor or any controlling person (as defined in Section 1-23-010 of the Municipal Code of Chicago) thereof to maintain eligibility to do business with the City of Chicago as required by Section 1-23-030 of the Municipal Code of Chicago shall be a default for which no cure is available and grounds for termination of this Contract.

2. Federal Terrorist (No-Business) List

Contractor warrants and represents that neither Contractor nor an Affiliate, as defined below, appears on the Specially Designated Nationals List, the Denied Persons List, the Unverified List, the Entity List, or the Debarred List as maintained by the Office of Foreign Assets Control of the U.S. Department of the Treasury or by the Bureau of Industry and Security of the U.S. Department of Commerce or their successors, or on any other list of persons or entities with which the City may not do business under any applicable law, rule, regulation, order or judgment.

"Affiliate" means a person or entity which directly, or indirectly through one or more intermediaries, controls, is controlled by or is under common control with Contractor. A person or entity will be deemed to be controlled by another person or entity if it is controlled in any manner whatsoever that results in control in fact by that other person or entity, either acting individually or acting jointly or in concert with others, whether directly or indirectly and whether through share ownership, a trust, a contract or otherwise.

S. Wheel Tax (City Sticker)

Contractor must pay all Wheel Tax required by Chapter 3-56 of the MCC, as amended from time to time. Contractor should take particular notice of MCC 3-56-020 and MCC 3-56-125 which relate to payment of the tax for vehicles that are used on City streets or on City property by City residents. For the purposes of Chapter 3-56, any business that owns, leases or otherwise controls a place of business within the City wherein motor vehicles or semi-trailers are stored, repaired, serviced, or loaded or unloaded in connection with the business is also considered to be a City resident.

T. EDS Update Obligation

Contractor is required to notify the City and update the EDS whenever there is a change in circumstances that makes any certification or information provided in an EDS inaccurate, obsolete or misleading. Failure to notify the City and update the EDS is grounds for declaring the Contractor in default, termination of the Contract for default, and declaring that the Contractor is ineligible for future contracts.

U. Electronic Mail Communication

Electronic mail communication between Contractor and City employees must relate only to business matters between Contractor and the City.

XXIII. MISCELLANEOUS

A. Counterparts

This Contract is comprised of several identical counterparts, each to be fully executed by the parties and each to be deemed an original having identical legal effect.

B. Modifications

No changes, modifications, cancellation, or discharge of this Contract, or any part of it, is valid unless in writing and signed by the parties to it, or their respective successors and assigns.

C. No Waiver of Legal Rights

1. The City will not be precluded or estopped from showing the true amount and character of the Work performed and materials furnished by you, or from showing that any measurement, estimate, or certificate is untrue or incorrectly made, or that the Work or materials do not conform in fact to the Contract. The City will not be precluded or estopped from recovering from you and your sureties such damages as the City may sustain by reason of your failure to comply with the terms of the Contract.
2. Neither the acceptance by the City, or any representative of the City, nor any payment for or acceptance of the whole or any part of the Work, nor any extension of time, nor any possession taken by the City, will operate as a waiver by the City of any portion of

the Contract, or of any power reserved in it or any right of the City to damages provided in it. A waiver of any breach of the Contract does not constitute a waiver of any other or subsequent breach.

3. Miscellaneous Provisions: Whenever under this Contract, the City by a proper authority waives your performance in any respect or waives a requirement or condition to either the City's or your performance, the waiver so granted, whether express or implied, only applies to the particular instance and is not deemed a waiver forever or for subsequent instance of the performance, requirement, or condition. No such waiver may be construed as a modification of this Contract regardless of the number of times the City may have waived the performance, requirement, or condition.

D. Contractor's Governing Law

This Contract is governed in accordance with the laws of the State of Illinois without regard to choice of law principles. You irrevocably submit, and will cause your Subcontractors to submit, to the original jurisdiction of those State or Federal courts located within the County of Cook, State of Illinois, with regard to any controversy arising out of, relating to, or in any way concerning the execution or performance of this Contract. You consent to service of process on you, at the option of the City, either by registered or certified mail addressed to the applicable office as provided for in this Contract, by registered or certified mail addressed to the office actually maintained by you, or by personal delivery on any of your officers, directors, or managing or general agents.

E. Consent to Service of Process and Jurisdiction

All judicial proceedings brought against you with respect to this Contract may be brought in (i) any court of the State of Illinois of competent jurisdiction; and (ii) any Federal court of competent jurisdiction located within the boundaries of the Federal court district of the Northern District of Illinois, and by execution and delivery of this Contract, you accept, for yourself and in connection with your properties, generally and unconditionally, the exclusive jurisdiction of those courts, and irrevocably agree to be bound by any final judgment rendered by them from which no appeal has been taken or is available. You designate and appoint the representative identified on the signature page to this Contract under the heading "Designation of Agent for Service Process" as your agent in Chicago, Illinois to receive on your behalf service of all process in any such proceedings in the court (which representative must be available to receive the service at all times), the service being acknowledged by the representative to effective and binding service in every respect. The agent may be changed only upon the giving of written notice by you to the City of the name and address of a new Agent for Service of Process who works within the geographical boundaries of the City of Chicago and is retained or employed by you. You irrevocably waive any objection (including any objection of the laying of venue or based on the grounds of *forum non conveniens*) which you may now or later have to bring any action or proceeding with respect to this Contract in the jurisdiction set forth above. Nothing in this section affects the right to serve process in any other manner permitted by law or limits the right of the City to bring proceedings against you in the courts of any other jurisdiction.

F. Contractor Cooperation

You must act in good faith in the performance of this Contract and co-operate with the City and any other City contractors at the site to assure timely completion of the Work. You must implement such measures as may be necessary to ensure that your staff and your Subcontractors are bound by the provisions of this Contract.

G. Joint and Several Liability

If you, or your successors or assigns, if any, are comprised of more than one individual or other legal entity (or a combination of them), then each and every obligation or undertaking stated in this Contract that you are to fulfill or perform is the joint and several obligation or undertaking of each such individual or other legal entity.

H. No Third Party Beneficiaries

Except as may otherwise be provided in this Contract, this Contract is solely for the benefit of the parties and nothing in this Contract is intended to create any third party beneficiary rights for Subcontractors or other third parties.

I. Notices

Notices, unless expressly provided for otherwise in this Contract, must be in writing and must be delivered personally or by placing in the United States mail, first class and certified, return receipt requested, with postage prepaid and addressed as follows:

1. If to the City: Commissioner, (Addresses of Department set forth in Book Two)
2. With Copies to: The Chief Procurement Officer, City Hall, 121 North LaSalle, Room 403, Chicago, IL 60602;
3. If to you: The address identified on your Proposal; and
4. With Copies to: Your bonding company.

Notices delivered by mail are deemed effective three days after mailing in accordance with this Section. Notices delivered personally are deemed effective upon receipt. Refusal to accept notice has the same effect as if notice were delivered. The addresses stated in this Contract may be revised without need for modification or amendment of this Contract, as long as written notification is given in accordance with this Section.

J. Authority

1. Contractor: Your execution of this Contract is authorized and signature(s) of each person signing on your behalf has been made with complete and full authority to commit you to all terms and conditions of this Contract, including every representation, certification, and warranty contained in it, attached to it and collectively incorporated by reference in it, or that may be required by the terms and conditions of this Contract. If other than a sole proprietorship, you must provide satisfactory evidence that the execution of the Contract is authorized in accordance with the business entities rules and procedures.

2. Consents and Approvals: Unless otherwise expressly stated in this Contract, any consents and approvals to be given by the City are made by the Commissioner.

K. Software License Agreements

The City reserves the right to negotiate software license agreements directly with the software supplier.

L. Title VI Solicitation Notice

The City, in accordance with the provisions of Title VI of the Civil Rights Act of 1964 (78 Stat. 252, 42 U.S.C. §§ 2000d to 2000d-4) and the Regulations, hereby notifies all bidders that it will affirmatively ensure that any contract entered into pursuant to this advertisement, disadvantaged business enterprises will be afforded full and fair opportunity to submit bids in response to this invitation and will not be discriminated against on the grounds of race, color, or national origin in consideration for an award.

XXIV. NOTICE OF REQUIREMENTS FOR AFFIRMATIVE ACTION TO ENSURE EQUAL EMPLOYMENT OPPORTUNITY (EXECUTIVE ORDER 11246)

1. The Offeror's or Bidder's attention is called to the “Equal Opportunity Clause” and the “Standard Federal Equal Employment Specifications” set forth herein.

2. The goals and timetables for minority and female participation, expressed in percentage terms for the Contractor's aggregate workforce in each trade on all construction work in the covered area, are as follows:

Time-tables	Goals for minority participation for each trade	Goals for female participation in each trade
	19.6%	6.9%

These goals are applicable to all the Contractor's construction work (whether or not it is Federal or federally assisted) performed in the covered area. If the contractor performs construction work in a geographical area located outside of the covered area, it shall apply the goals established for such geographical area where the work is actually performed. With regard to this second area, the contractor also is subject to the goals for both its federally involved and nonfederally involved construction.

The Contractor's compliance with the Executive Order and the regulations in 41 CFR part 60-4 shall be based on its implementation of the Equal Opportunity Clause, specific affirmative action obligations required by the specifications set forth in 41 CFR 60-4.3(a), and its efforts to meet the goals. The hours of minority and female employment and training must be substantially uniform throughout the length of the contract, and in each trade, and the contractor shall make a good faith effort to employ minorities and women evenly on each of its projects. The transfer of minority or female employees or trainees from Contractor to Contractor or from project to project for the sole purpose of meeting the Contractor's goals shall be a violation of the contract, the Executive Order and the regulations in 41 CFR part 60-4. Compliance with the goals will be measured against the total work hours performed.

3. The Contractor shall provide written notification to the Director of the Office of Federal Contract Compliance Programs within 10 working days of award of any construction subcontract in excess of $10,000 at any tier for construction work under the contract resulting from this solicitation. The notification shall list the name, address and telephone number of the subcontractor; employer identification number of the subcontractor; estimated dollar amount of the subcontract; estimated starting and completion dates of the subcontract; and the geographical area in which the subcontract is to be performed.

   As used in this Notice, and in the contract resulting from this solicitation, the “covered area” includes the City of Chicago, Cook, DuPage, Kane, Lake, McHenry, and Will Counties (Standard Metropolitan Statistical Area).

XXV. EQUAL EMPLOYMENT OPPORTUNITY

Contractor's federal Equal Opportunity obligations, including but not limited those of 41 CFR Part 60-2 and Executive Order 11246 are set forth in FHWA Form 1273. Contractor's attention is particularly directed to the provisions under II. "Nondiscrimination."

XXVI. OTHER FEDERAL PROVISIONS

A. Interest of Members of or Delegates to the United States Congress

In accordance with 41 USC § 22, you will not admit any member of or delegate to the United States Congress to any share or part of the Contract or any benefit derived therefrom.

B. False or Fraudulent Statements and Claims

1. You recognize that the requirements of the Program Fraud Civil Remedies Act of 1986, as amended, 49 USC § 3081 et seq. and U.S. DOT regulations, "Program Fraud Civil Remedies," 49 CFR Part 31, apply to your actions pertaining to the Contract. Accordingly, by signing the Contract, you certify or affirm the truthfulness and accuracy of any statement you have made, you make, or you may make pertaining to the Contract, including any invoice for your services. In addition to other penalties that may be applicable, you also acknowledge that if you make a false, fictitious, or fraudulent claim, statement, submission, or certification, the federal government reserves the right to impose the penalties of the Program Fraud Civil Remedies Act of 1986, as amended, on you to the extent the federal government deems appropriate.

2. You also acknowledge that if you make a false, fictitious, or fraudulent claim, statement, submission, or certification to the City or federal government in connection with an urbanized area formula project financed with federal assistance authorized by 49 USC § 5307, the Government reserves the right to impose on you the penalties of 18 USC § 1001 and 49 USC § 5307(n)(1), to the extent the federal government deems appropriate.

C. Federal Interest in Patents

1. General. If any invention, improvement, or discovery of yours is conceived or first actually reduced to practice in the course of or under the Contract, and that invention, improvement, or discovery is patentable under the laws of the Unites States of America or any foreign country, you must notify City immediately and provide a detailed report.

2. Federal Rights - Unless the federal government later makes a contrary determination in writing, the rights and responsibilities of the City, you, and the federal government pertaining to that invention, improvement, or discovery will be determined in accordance with applicable federal laws and regulations, including any waiver of them; and irrespective of your status or the status of any Subcontractor at any tier (e.g., a large business, small business, non-profit organization, institution of higher education, individual), you will transmit to the federal government those rights due the federal government in any invention resulting from the Contract.

D. Federal Interest in Data and Copyrights

1. Definition

The term "subject data" used in this Section means recorded information, whether or not copyrighted, that is delivered or specified to be delivered under the Contract. Examples include computer software, engineering drawings and associated lists, specifications, standards, process sheets, manuals, technical reports, catalog item identifications, and related information. The term "subject data" does not include financial reports, cost analyses, and similar information incidental to Contract administration.

2. Federal Restrictions

The following restrictions apply to all subject data first produced in the performance of the Contract. Except as provided in the Contract and except for your own internal use, you may not publish or publicly reproduce subject data in whole or in part, or in any manner or form, nor may you authorize others to do so, without the written consent of the City and the federal government, until such time as the federal government may have either released or approved the release of such data to the public.

3. Federal Rights in Data and Copyrights

In accordance with subparts 34 and 36 of the Common Rule, the City and the federal government reserve a royalty-free, non-exclusive and irrevocable license to reproduce, publish, or otherwise use, and to authorize others to use, for City or federal government purposes, the types of subject data described below. Without the copyright owner's consent, the City and federal government may not extend their license to other parties.

a. Any subject data developed under the Contract or subagreement financed by a federal Grant Agreement or Cooperative Agreement, whether or not a copyright has been obtained; and

b. Any rights of copyright in which you purchase ownership with federal assistance.

4. Special Federal Rights for Planning Research and Development Projects

When the federal government provides financial assistance for a planning, research, development, or demonstration project, its general intention is to increase public knowledge, rather than limit the benefits of the project to participants in the project. Therefore, unless the federal government determines otherwise, if this is a planning, research, development, or demonstration project, you consent, in addition to the rights in data and copyrights set forth above, that the City or federal government may make available to any third party either a license in the copyright to the subject data or a copy of the subject data. If the project is not completed for any reason whatsoever, all data developed under the project will become subject data and must be delivered as the City or federal government may direct. This subsection, however, does not apply to adaptions of automatic data processing equipment or previously existing software programs for the City's use whose costs are financed with federal transportation funds for capital projects.

5. Hold Harmless

Unless prohibited by state law, upon request by the City or the federal government, you must hold harmless the City and the federal government and their officers, agents, and employees acting within the scope of their official duties against any liability, including costs and expenses, resulting from any willful or intentional violation by you of proprietary rights, copyrights, or right of privacy, arising out of the publication, translation, reproduction,

delivery, use, or disposition of any data furnished under the Contract. You are not required to indemnify the City or federal government for any such liability arising out of the wrongful acts of employees or agents of the City or federal government.

6. Restrictions on Access to Patent Rights

Nothing contained in this Section on rights in data implies a license to the City or federal government under any patent or is to be construed as affecting the scope of any license or other right otherwise granted to the City or federal government under any patent.

7. Application on Materials Incorporated into Project

The requirements of subsections XXVI.D.2 , XXVI.D.3, and XXVI.D.4 of this Section do not apply to material furnished by the City and incorporated into the Work.

E. No Exclusionary or Discriminatory Specifications

Apart from inconsistent requirements imposed by federal statute or regulations, you will comply with the requirements of 49 USC ' 5323(h)(2) by refraining from using any federal assistance to support subcontracts procured using exclusionary or discriminatory specifications.

F. Cargo Preference - Use of United States Flag Vessels

You must comply with U.S. Maritime Administration regulations, "Cargo-Preference -- U.S. Flag Vessels," 49 CFR Part 381, and include the clauses required by those regulations, modified as necessary to identify the affected parties, in each subcontract or sub-agreement involving equipment, materials, or commodities suitable for transport by ocean vessel.

G. Fly America

You must comply with 49 USC Section 40118, and related regulations at 41 CFR Part 301-10, regarding use of United States air carriers, and included clauses requiring your Subcontractors to comply with the requirements of 49 USC Section 40118, and related regulations at 4 CFR Part 52, in all of your subcontracts.

H. No Federal Government Obligations to Third Parties

Absent the federal government's express written consent, the federal government is not subject to any obligations or liabilities to any contractor or any other person not a party to the Grant Agreement or Cooperative Agreement between the City and the federal government, which is a source of funds for this Contract. Notwithstanding any concurrence provided by the federal government in or approval of any solicitation, agreement, or contract, the federal government continues to have no obligations or liabilities to any party, including you.

I. Allowable Costs

Notwithstanding any compensation provision to the contrary, your compensation under this Contract is limited to those amounts that are allowable and allocable to the Contract in accordance with OMB Circular A-87 and the regulations in 49 CFR Part 18. To the extent that an audit reveals that you have received payment in excess of such amounts, the City may offset such excess payments against any future payments due to you and, if no future payments are due or if future payments are less than such excess, you must promptly refund the amount of the excess payments to the City.

J. Contract Work Hours and Safety Standards Act

If applicable according to their terms, you must comply and assure compliance with sections 102 and 107 of the Contract Work Hours and Safety Standards Act, as amended, 40 USC " 327 through 333, and implementing U.S. DOL regulations, "Labor Standards Provisions Applicable to Contracts Governing Federally Financed and Assisted Construction (also Labor Standards Provisions Applicable to Non-construction Contracts Subject to the Contract Work Hours and Safety Standards Act)," 29 CFR Part 5; and U.S. DOL regulations, "Safety and Health Regulations for Construction," 29 CFR Part 1926. In addition to other requirements that may apply:

1. In accordance with sections of the Contract Work Hours and Safety Standards Act, as amended, 40 USC " 327 through 332, you must assure that, for the Contract, the wages of every mechanic and laborer will be computed on the basis of a standard work week of 40 hours, and that each worker will be compensated for Work exceeding the standard work week at a rate of not less than 1.5 times the basic rate of pay for all hours worked in excess of 40 hours in the work week. Determinations pertaining to these requirements will be made in accordance with applicable U.S. DOL regulations, "Labor Standards Provisions Applicable to Contracts Governing Federally Financed and Assisted Construction (also Labor Standards Provisions Applicable to Non-Construction Contracts Subject to the Contract Work Hours and Safety Standards Act)," 29 CFR Part 5.

2. In accordance with section 107 of the Contract Work Hours and Safety Standards Act, as amended, 40 USC §333, you must assure that no laborer or mechanic working on a construction contract is required to work in surroundings or under working conditions that are unsanitary, hazardous, or dangerous to his or her health and safety, as determined in accordance with US DOL regulations, "Safety and Health Regulations for Construction," 29 CFR Part 1926.

K. Seismic Safety

If this Contract is for the construction of a building or an addition thereto, you must apply the requirements of US DOT regulations applicable to seismic safety requirements for US DOT assisted construction projects at 49 CFR Part 41, (specifically, 49 CFR ' 41.120), and any implementing guidance the federal government may issue, to the construction of any new building and to additions to any existing building.

L. Buy America

You must ensure that any Work performed under this Contract complies with the "Buy America" regulations of the FHWA, as set forth in 23 CFR Part 635.410, which generally require that all manufacturing processes for steel and iron products to be incorporated in a construction project, including application of a coating, must occur in the United States. Coating includes all processes which protect or enhance the value of the material to which the coating is applied.

XXVII. STANDARD FEDERAL EQUAL EMPLOYMENT OPPORTUNITY CONSTRUCTION CONTRACT SPECIFICATIONS (EXECUTIVE ORDER 11246)

A. As used in these specifications:

1. "Covered Area" means the geographical area described in the solicitation from which this contract resulted;

2. "Director" means Director, Office of Federal Contract Compliance Programs, United States Department of Labor, or any person to whom the Director delegates authority;

3. "Employer Identification Number" means the federal Social Security number used on the Employer's Quarterly federal Tax Return, U.S. Treasury Department Form 941.

4. "Minority" includes:

a. Black (all persons having origins in any of the Black African racial groups not of Hispanic origin);

b. Hispanic (all persons of Mexican, Puerto Rican, Cuban, Central or South American or other Spanish Culture or origin, regardless of race);

c. Asian and Pacific Islander (all persons having origins in any of the original peoples of the Far East, Southeast Asia, the Indian Subcontinent, or the Pacific Islands); and

d. American Indian or Alaskan Native (all persons having origins in any of the original people of North America and maintaining identifiable tribal affiliations through membership and participation or community identification).

B. Whenever you, or any subcontractor at any tier, subcontracts a portion of the work involving any construction trade, you must physically include in each subcontract in excess of $10,000 the provisions of these specification and the Notice that contains the applicable goals for minority and female participation and that is set forth in the solicitations from which this contract resulted.

C. If you are participating (pursuant to 41 CFR 60-4.5) in a Hometown Plan approved by the U.S. Department of Labor in the covered area either individually or through an association, its affirmative action obligations on all work in the Plan area (including goals and timetables) must be in accordance with the Plan for those trades that have unions participating in the Plan. You must be able to demonstrate your participation in and compliance with the provisions of any such Hometown Plan. Each contractor or Subcontractor participating in an approved Plan is individually required to comply with its obligations under the EEO clause, and to make a good faith effort to achieve each goal under the Plan in each trade in which it has employees. The overall good faith performance by other contractors or Subcontractors toward a goal in an approved Plan does not excuse any covered contractor's or Subcontractor's failure to take good faith efforts to achieve the Plan goals and timetables.

D. You must implement the specific affirmative action standards provided in paragraphs XXVI.G.1 through XXVI.G.16 of these specifications. The goals set forth in the solicitation from which this contract resulted are expressed as percentages of the total hours of employment and training of minority and female utilization you should reasonably be able to achieve in each construction trade in which you have employees in the covered area. Covered Construction contractors performing construction work in geographical areas where they do not have a federal or federally assisted construction contract must apply the minority and female goals established for the geographical area where the work is being performed. Goals are published periodically in the Federal Register in notice form, and such notices may be obtained from any Office of Federal Contract Compliance Programs office or from federal procurement contracting officers. You are expected to make substantially uniform progress in meeting its goals in each craft during the period specified.

E. Neither the provisions of any collective bargaining agreement, nor the failure by a union with whom you have a collective bargaining agreement, to refer either minorities or women excuses your obligations under these specifications, Executive Order 11246, or the regulations promulgated pursuant thereto.

F. In order for the non-working training hours of apprentices and trainees to be counted in meeting the goals, you must employ such apprentices and trainees during the training period, and you must have made a commitment to employ the apprentices and trainees at the completion of their training, subject to the availability of employment opportunities. Trainees must be trained pursuant to training programs approved by the U.S. Department of Labor.

G. You must take specific affirmative action to ensure equal employment opportunity. The evaluation of your compliance with these specifications will be based upon your effort to achieve maximum results from your actions. You must document these efforts fully, and must implement affirmative action steps at least as extensive as the following:

1. Ensure and maintain a working environment free of harassment, intimidation, and coercion at all sites, and in all facilities at which your employees are assigned to work. You, where possible, will assign two or more women to each construction project. You must specifically ensure that all foremen, superintendents, and other onsite supervisory personnel are aware of and carry out your obligation to maintain such a working environment, with specific attention to minority or female individuals working at such sites or in such facilities.

2. Establish and maintain a current list of minority and female recruitment sources, provide written notification to minority and female recruitment sources and to community organizations when you or your unions have employment opportunities available, and maintain a record of the organization’s responses.

3. Maintain a current file of the names, addresses and telephone numbers of each minority and female off-the-street applicant and minority or female referral from a union, a recruitment source or community organization and of what action was taken with respect to each such individual. If the individual was sent to the union hiring hall for referral and was not referred back to you or the union or, if referred, not employed by you, this must be documented in the file with reason therefor, along with whatever additional actions you may have taken.

4. Provide immediate written notification to the director when the union or unions with which you have a collective bargaining agreement have not referred to you a minority person or woman that you sent, or when you have other information that the union referral process has impeded your efforts to meet your obligations.

5. Develop on-the-job training opportunities and/or participate in training programs for the area that expressly includes minorities and women, including upgrading programs and apprenticeship and trainee programs relevant to your employment needs, especially those programs funded or approved by the Department of Labor. You must provide notice of these programs to the sources complied under G.2. above.

6. Disseminate your EEO policy by providing notice of the policy to unions and training programs and requesting their cooperation in assisting you in meeting your EEO obligations; by including it in any policy manual and collective bargaining agreement; by publicizing it in the company newspaper, annual report, etc.; by specific review of the policy

with all management personnel and with all minority and female employees at least once a year and by posting the company EEO policy on bulletin boards accessible to all employees at each location where construction work is performed.

7. Review, at least annually, the company's EEO policy and affirmative action obligations under these specifications with all employees having any responsibility for hiring, assignment, layoff, termination or other employment decisions including specific review of these items with onsite supervisory personnel such as Superintendents, General Foremen, etc., before the initiation of construction work at any job site. A written record must be made and maintained identifying the time and place of these meetings, persons attending, subject matter discussed, and disposition of the subject matter.

8. Disseminate your EEO policy externally by including it in any advertising in the news media, specifically including minority and female news media, and providing written notification to and discussing your EEO policy with other contractors and Subcontractors with whom you anticipate doing business.

9. Direct your recruitment efforts, both oral and written, to minority, female and community organizations, to schools with minority and female students and to minority and female recruitment and training organizations serving your recruitment area and employment needs. Not later than one month before the date for the acceptance of applications for apprenticeship or other training by any recruitment source, you must send written notification to organizations such as the above, describing the openings, screening procedures, and tests to be used in the selection process.

10. Encourage present minority and female employees to recruit other minority persons and women and, where reasonable, provide after school, summer and vacation employment to minority and female youth both on the site and in other areas of a contractor's workforce.

11. Validate all tests and other selection requirements where there is an obligation to do so under 41 CFR Part 60-3.

12. Conduct, at least annually, an inventory and evaluation at least of all minority and female personnel for promotional opportunities and encourage these employees to seek or to prepare for, through appropriate training, etc., such opportunities.

13. Ensure that seniority practices, job classifications, work assignments and other personnel practices, do not have a discriminatory effect by continually monitoring all personnel and employment related activities to ensure that the EEO policy and your obligations under these specifications are being carried out.

14. Ensure that all facilities and company activities are nonsegregated except that separate or single-user toilet and necessary changing facilities must be provided to assure privacy between the sexes.

15. Document and maintain a record of all solicitations of offers for subcontracts from minority and female construction contractors and suppliers, including circulation of solicitations to minority and female contractor associations and other business associations.

16. Conduct a review, at least annually of all supervisor's adherence to and performance under your EEO policies and affirmative action obligations.

H. Contractors are encouraged to participate in voluntary associations that assist in fulfilling one or more of their affirmative action obligations (G.1. through 16.). The efforts of a contractor association, joint contractor-union, contractor community, or other similar group of which you are a member and participant, may be asserted as fulfilling any one or more of its obligations under G.1. through 16 of these Specifications but only if you actively participate in the group, make every effort to assure that the group has a positive impact on the employment of minorities and women in the industry, ensure that the concrete benefits of the program are reflected in your minority and female workforce participation, make a good faith effort to meet your individual participation, make a good faith effort to meet your individual goals and timetables, and can provide access to documentation that demonstrates the effectiveness of actions taken on behalf of you. The obligation to comply, however, is yours and failure of such a group to fulfill an obligation is not a defense for your noncompliance.

I. A single goal for minorities and a separate single goal for women have been established. You, however, are required to provide equal employment opportunity and to make affirmative action for all minority groups, both male and female, and all women, both minority and non-minority. Consequently, you may be in violation of the Executive Order if a particular group is employed in a substantially disparate manner (for example, even though you have achieved its goals for women generally, you may be in violation of the Executive Order if a specific minority group of women is underutilized).

J. You must not use the goals and timetables or affirmative action standards to discriminate against any person because of race, color, religion, sex, or national origin.

K. You must not enter into any Subcontract with any person or firm debarred from Government contracts pursuant to Executive Order 11246.

L. You must carry out such sanctions and penalties for violation of these specifications and of the Equal Opportunity Clause, including suspension, termination and cancellation of existing subcontracts as may be imposed or ordered pursuant to Executive Order 11246, as amended, and its implementing regulations, by the Office of Federal Contract Compliance Programs. Any contractor who fails to carry out such sanctions and penalties is in violation of these specifications and Executive Order 11246, as amended.

M. You, in fulfilling your obligations under these specifications, must implement specific affirmative action steps, at least as extensive as those standards prescribed in paragraph G. of these specifications, so as to achieve maximum results from its efforts to ensure equal employment opportunity. If you fail to comply with the requirements of the Executive Order, the implementing regulations, or these Specifications, the Director must proceed in accordance with 41 CFR 60-4.8.

N. You must designate a responsible official to monitor all employment related activity to ensure that the company EEO policy is being carried out, to submit reports relating to the provisions of this Section as may be required by Government and to keep records. Records must at least include for each employee the name, address, telephone numbers, construction trade, union affiliation if any, employee identification number when assigned, social security number, race, sex, status (e.g. mechanic, apprentice, trainee, helper, or laborer), dates of changes in status, hours worked per week in the indicated trade, rate of pay, and locations at which the work was performed. Records must be maintained in an

easily understandable and retrievable form; however, to the degree that existing records satisfy this requirement, contractors are not required to maintain separate records.

O. Nothing provided in this Contract may be construed as a limitation upon the application of other laws that establish different standards of compliance or upon the application of requirements for the hiring of local or other area residents (e.g., those under the Public Works Employment Act of 1977 and the Community Development Block Grant Program).

XXVIII. Special Conditions Regarding Disadvantaged Business Enterprise Commitment

See next page. Remainder of page intentionally blank.

CITY OF CHICAGO
Department of Procurement Services
Jamie L. Rhee, Chief Procurement Officer
121 North LaSalle Street, Room 806
Chicago, Illinois 60602-1284
Fax: 312-744-3281

DBE SPECIAL CONDITIONS FOR FAA/FTA/FHWA (IDOT) FUNDED CONTRACTS CONSTRUCTION, SERVICES, TASK ORDER SERVICES, AND SUPPLY

Contractor must comply with the following terms and conditions where Work or Services are funded in whole or in part by any federal funds including but not limited to FHWA, FTA and FAA.

1.1. **Policy and Terms**
In the event of a conflict between these Special Conditions and 49 CFR Part 26, the provisions of 49 CFR Part 26 shall control.

It is the policy of the City that Disadvantaged Business Enterprises (DBEs) as defined in 49 CFR Part 26, have the maximum opportunity to participate fully in the performance of contracts subject to 49 CFR Part 26. Contractor must not discriminate against any person or business on the basis of race, color, national origin or sex in the performance of this Contract. Contractor must carry out applicable requirements of 49 CFR Part 26 in the award and administration of United States Department of Transportation (DOT)-assisted contracts and take affirmative action to ensure that businesses owned by socially and economically disadvantaged individuals have full opportunity to participate.

The City has set an overall DBE Program Goal of 30%.

Failure to carry out the commitments and policies set forth in this Article constitutes a material breach of the Contract and may result in the termination of the Contract or such remedy as the City deems appropriate.

1.1.1. Contract-Specific DBE Participation Goal
The City sets contract-specific goals for participation in furtherance of reaching its overall DBE Program Goal.

For purposes of this contract, the City has set the following contract goal:

Contract DBE Participation Goal: See percentage set out in Book 2.

Note: if this contract is task-order based, goals will be set for the individual task orders; in the context of each task order, these provisions will apply to those task order goals as if they were an overall contract goal.

A bid or proposal may be rejected as non-responsive if the bidder/proposer fails to submit one or more of the following with its bid demonstrating its good faith efforts to meet the Contract DBE Participation Goal by reaching out to DBEs to perform work on the contract:

A. A DBE compliance plan demonstrating how the bidder/proposer plans to meet the Contract DBE Participation Goal (Schedule D, D-1 or D-3 and Schedule(s) C, C-1 or C-3); and/or

B. Documentation of Good Faith Efforts to obtain DBE participation in this contract.

Note: Schedules D and C are used for contracts for construction work. Schedules D-1 and D-3 are used for contracts for services, and Schedules D-3 and C-3 are used for task order based contracts.

The bidder/proposer must make good faith efforts to obtain DBE participation in this contract. The commitment will be reflected in Schedule D, D-1 or D-3. The bidder/proposer must document that it has obtained enough DBE participation to meet the Contract DBE Participation Goal set forth above or, if unsuccessful in doing so, has made adequate Good Faith Efforts to meet the goal (see Section 1.7 "Good Faith Efforts"). If awarded the Contract, Contractor must expend not less than the committed percentage of the total Contract Price (including any amendments and modifications) for contract participation by DBEs.

For purposes of evaluating bidder/proposer's responsiveness, the Contract DBE Participation Goal will be a percentage of the total contract value. The Contract DBE Participation Goal applies to the total value of the contract, inclusive of all amendments and modifications. The Chief Procurement Officer also has the authority to review each proposed contract modification and amendment that by itself or aggregated with previous modification/amendment requests, increases the contract value by 10 percent of the initial award or $50,000, whichever is greater, for opportunities to increase participation of DBEs already involved in the contract.

The Contract DBE Participation Goal may be met by the bidder/proposer's status as DBE, or by joint venture with one or more DBEs (but only work performed by the DBEs own forces will be counted), or by subcontracting a portion of the work to one or more DBEs, or by purchasing materials used in the performance of the contract from one or more DBEs or by any combination of the foregoing, as further described in Section1.5, "Counting DBE Participation Towards the Contract DBE Participation Goal."

1.1.2. DBE Financial Institutions

Bidder/Proposer is encouraged to use financial institutions owned and controlled by socially and economically disadvantaged individuals. Use of such institutions may be considered by the City as evidence of bidder/proposer's willingness to do business with DBEs. Information about such institutions is available in the City's DBE Program document. In addition, the Illinois Unified Certification Program (IL UCP) Disadvantaged Business Enterprises Directory is available via the internet at www.cityofchicago.org/procurement and in print at the City of Chicago, Bid and Bond Room, City Hall, 121 N. LaSalle, Room 301, Chicago, IL 60602.

1.1.3. DBE Participation Goals for Contract Modifications

The DBE Participation Goals established at the time of bid/proposal submission shall also apply to any modifications to the Contract after award. This is, any additional work and/or money added to the Contract must also adhere to these Special Conditions requiring Contractor to (sub)contract with DBEs to meet the DBE Participation Goals.

- Contractor must assist the Construction Manager or User Department in preparing its "proposed contract modification" by evaluating the subject matter of the modification and determining whether there are opportunities for DBE participation and at what rates.
- Contractor must produce a statement listing the DBEs that will be utilized on any contract modification. The statement must include the percentage of utilization of the firms. If no DBE participation is available, an explanation of good faith efforts to obtain participation must be included.

The Chief Procurement Officer shall review each proposed contract modification and amendment that by itself or aggregated with previous modification/amendment requests, increases the contract value by ten percent (10%) of the initial award, or $50,000, whichever is less, for opportunities to increase the participation of DBEs already involved in the Contract.

1.2. **Definitions and Usage**

Terms that are capitalized in these Special Conditions are defined terms and have the meanings set forth in 49 CFR Part 26.5, unless otherwise defined in these Special Conditions or the Contract Documents.

"Area of Specialty" means the description of a DBE firm's business which has been determined by the certifying agency to be most reflective of the DBE firm's claimed specialty or expertise. Each DBE letter of certification contains a description of the firm's Area of Specialty. This information is also contained in the Directory. Credit toward the Contract DBE Participation Goal is limited to the participation of firms performing within their Areas of Specialty.

NOTICE: The Department of Procurement Services does not make any representation concerning the ability of any DBE to perform work within its Area of Specialty. It is the responsibility of all bidders/proposers to determine the capability and capacity of DBE firms to satisfactorily perform the work proposed.

Certain terms are used in these Special Conditions to indicate the stage of bidding, proposing or contracting in which certain obligations arise. The term "proposer" means a firm responding to a request for proposals by the City for professional or technical services or other procurement not adaptive to competitive bidding; a bidder or proposer becomes a "contractor" after being awarded a contract by the City.

"Contractor" also means "Consultant," if Consultant is the term used for the entity that has entered into this agreement or contract with the City.

"Directory" means the IL UCP Disadvantaged Business Enterprises Directory, maintained by the City as well as all IL UCP participating agencies, that identifies all firms eligible to participate as DBEs. The Directory lists the firm's name, address, phone number, date of most recent certification and the type of work the firm has been certified to perform as a DBE. The City revises the Directory on a monthly basis. The Directory is available via the internet on the City's web site at www.cityofchicago.org/procurement, and in print at the City of Chicago, Bid and Bond Room 121 N. LaSalle St., Room 301, Chicago, Illinois, 60602. Bidder/Proposers are responsible for verifying the current certification status of all proposed DBE firms.

"Disadvantaged Business Enterprise" or **"DBE"** means a for-profit small business concern that (i) is at least 51 percent owned by one or more individuals who are both socially and economically disadvantaged, or in the case of a corporation, 51 percent of the stock is owned by one or more such individuals; (ii) whose management and daily operations are controlled by one or more of the socially and economically disadvantaged individuals who own it; (iii) the personal net worth of the individuals who own it does not exceed the limit specified at 49 CFR Part 26; and (iv) it has been certified as a DBE in accordance with the procedures set out in 49 CFR Part 26.

"Joint Venture" means an association of a DBE firm and one or more other firms to carry out a single, for-profit business enterprise, for which the parties combine their property, capital, efforts, skills and knowledge, and in which the DBE is responsible for a distinct, clearly defined portion of the work of the contract and whose share in the capital contribution, control, management, risks, and profits of the joint venture are commensurate with its ownership interest.

1.3. **Third Party Challenges To Eligibility Of DBE Firm**

As noted in 49 CFR Section 26.87, any third party (complainant) may file a complaint alleging that a currently certified DBE is ineligible. The complaint must be made in writing to the City and specify the alleged reasons why the firm is ineligible and include all available information relevant to a determination of whether the challenged party is in fact socially and economically disadvantaged. The City, during its determination of findings, will notify the challenged party of the allegations and notify both parties in writing of the outcome. The confidentiality of the complainant's identity will be protected as provided in 49 CFR Section 26.109(b). If the City determines first, that there were not reasonable grounds presented in the complaint sufficient to justify an inquiry, then the City will notify the complainant and the challenged party of this determination and

the reasons for it. During the pendency of any complaint, the presumption that the challenged party is a socially and economically disadvantaged will remain in effect.

1.4. **Joint Ventures**

Bidders/proposers may develop joint venture agreements as an instrument to provide participation by DBEs in contract work. A joint venture may consist of any combination of DBEs and non-certified firms as long as one member is a DBE.

A. The joint venture may be eligible for DBE participation credit towards the Contract Specific Goals only if:

1. The DBE joint venture partner's share in the capital contribution, control, management, risks and profits of the joint venture is equal to its ownership interest;

2. The DBE joint venture partner is responsible for a distinct, clearly defined portion of the requirements of the contract for which it is at risk;

3. Each joint venture partner executes the bid/contract to the City; and

4. The joint venture partners have entered into a written agreement specifying the terms and conditions of the relationship between the partners and their relationship and responsibilities to the contract, and all such terms and conditions are in accordance with the conditions set forth in Items 1, 2, and 3 above in this Paragraph A.

B. The Chief Procurement Officer shall evaluate the proposed joint venture agreement, the Schedule B submitted on behalf of the proposed joint venture, and all related documents to determine whether these requirements have been satisfied. The Chief Procurement Officer shall also consider the record of the joint venture partners on other City of Chicago contracts. The decision of the Chief Procurement Officer regarding the eligibility of the joint venture for credit towards meeting the Contract Specific Goals, and the portion of those goals met by the joint venture, shall be final.

The joint venture may receive DBE credit for work performed by the DBE joint venture partner(s) equal to the value of work performed by the DBE with its own forces for a distinct, clearly defined portion of the work.

The Chief Procurement Officer may also count the dollar value of work subcontracted to other DBEs. Work performed by the forces of a non-certified joint venture partner shall not be counted toward the Contract Specific Goals.

C. Schedule B: DBE Affidavit of Joint Venture

Where the bidder/proposer's Compliance Plan includes the participation of any DBE as a joint venture partner, the bidder/proposer must submit with its bid or proposal a Schedule B and the proposed joint venture agreement. These documents must both clearly evidence that the DBE joint venture partner(s) will be responsible for a clearly defined portion of the work to be performed, and that the DBE's responsibilities and risks are proportionate to its ownership percentage. The proposed joint venture agreement must include specific details related to:

1. The parties' contributions of capital, personnel, and equipment and share of the costs of insurance and bonding;

2. Work items to be performed by the DBE's own forces and/or work to be performed by employees of the newly formed joint venture entity;

3. Work items to be performed under the supervision of the DBE joint venture partner; and

4. The DBE's commitment of management, supervisory, and operative personnel to the performance of the contract.

Vague, general descriptions of the responsibilities of the DBE joint venture partner do not provide any basis for awarding credit. For example, descriptions such as "participate in the budgeting process," "assist with hiring," or "work with managers to improve customer service" do not identify distinct, clearly defined portions of the work. Roles assigned should require activities that are performed on a regular, recurring basis rather than as needed. The roles must also be pertinent to the nature of the business for which credit is being sought. For instance, if the scope of work required by the City entails the delivery of goods or services to various sites in the City, stating that the DBE joint venture partner will be responsible for the performance of all routine maintenance and all repairs required to the vehicles used to deliver such goods or services is pertinent to the nature of the business for which credit is being sought.

D. DBE Participation Level in Joint Venture

Credit for participation by DBEs in joint ventures with non-DBEs does not require a minimum participation of 51 percent in venture ownership and control on the part of the DBE. Credit is based on the percentage of the work performed by the DBE's own forces. *See* Section 1.5, "Counting DBE Participation Toward the Contract DBE Participation Goal").

NOTE: The City requires that whenever a joint venture submits a bid/proposal as prime contractor, each joint venturer must separately sign the bid/proposal to the City on the pages marked TO BE EXECUTED BY A CORPORATION; TO BE EXECUTED BY A PARTNERSHIP; and/or TO BE EXECUTED BY A SOLE PROPRIETOR as applicable.

1.5. **Counting DBE Participation Toward The Contract DBE Participation Goal**
When a DBE participates in a contract, count only the value of the work actually performed by the DBE toward the DBE Participation Goal, as described in 49 CFR 26.55.

Refer to this section when preparing the DBE compliance plan and completing Schedule D for guidance on what value of the participation by DBEs will be counted toward the stated DBE Participation Goal. The "Percent Amount of Participation" depends on whether and with whom a DBE subcontracts out any portion of its work and other factors.

Expenditures to a DBE contractor or subcontractor may be counted only if the DBE is performing a "commercially useful function" on the contract. The term "commercially useful function" is defined in 49 CFR 26.55(c). If a DBE does not perform or exercise responsibility for at least 30 percent of the total cost of its contract with its own work force, or the DBE subcontracts a greater portion of the work of a contract than would be expected on the basis of normal industry practice for the type of work involved, the City will rebuttably presume that the DBE is not performing a commercially useful function.

A contractor (and bidder/proposers in their proposals) may count only the following toward the Contract DBE Participation Goal and should report only the following to the Chief Procurement Officer:

A. **The value of the work actually performed by a DBE**, as described below:

1. For construction contracts and other contracts not covered by A.2., below:

   The entire amount of that portion of a contract that is performed by the DBE's own forces. Include the cost of supplies and materials obtained by the DBE for the work of the contract, including supplies purchased or equipment leased by the DBE (except supplies and equipment the DBE subcontractor purchases or leases from the prime contractor or its affiliate). (See 49 CFR 26.55(a)(1).)

2. For contracts involving the provision of "bona fide services" (such as professional, technical, consultant or managerial services), or for providing bonds or insurance specifically required for the performance of a DOT-assisted contract:

The entire amount of fees or commissions charged by a DBE for providing a bona fide service, provided that the fee is reasonable and not excessive as compared with fees customarily allowed for similar services. The determination of whether the fee is reasonable and not excessive will be made by the City. (See 49 CFR 26.55(a)(2).)

3. When a DBE subcontracts part of the work of its contract to another firm:

   The value of the subcontracted work may be counted toward the Contract DBE Participation Goal only if the DBE's subcontractor is itself a DBE. Work that a DBE subcontracts to a non-DBE firm does not count toward the Contract DBE Participation Goal. (See 49 CFR 26.55(a)(3).)

B. **Joint Ventures:** When a DBE performs as a participant in a joint venture, the portion of the total dollar value of the contract equal to the distinct, clearly defined portion of the work of the contract that the DBE performs with its own forces is counted towards the Contract DBE Participation Goal. (See 49 CFR 26.55(b).)

C. **Materials and Supplies:** Regarding expenditures with a DBE for materials or supplies:

1. If the materials or supplies are obtained from a DBE "manufacturer," as that term is described in 49 CFR 26.55(e)(1), 100 percent of the cost of the materials or supplies. A manufacturer is a firm that operates or maintains a factory or establishment that produces, on the premises, the materials, supplies, articles or equipment required under the contract and of the general character described in the specifications.

2. If the materials or supplies are purchased from a DBE "regular dealer," as that term is described in 49 CFR 26.55(e)(2), 60 percent of the cost of the materials or supplies.

3. With respect to materials or supplies purchased from a DBE which is neither a manufacturer nor a regular dealer, the amount of fees or commissions charged for assistance in the procurement of the materials and supplies, or fees or transportation charges for the delivery of materials or supplies required on a job site, provided that the fees are reasonable and not excessive as compared with fees customarily allowed for similar services. Do not count any portion of the cost of materials and supplies themselves.

The City shall determine the amount of credit awarded to a firm for the provisions of materials and supplies (e.g., whether a firm is acting as a regular dealer or a transaction expediter) on a contract-by-contract basis.

D. **Trucking Firms:** If the DBE manages and supervises the entire trucking operation for which it is responsible on a particular contract and the DBE itself owns and operates at least one fully licensed, insured and operational truck used on the contract and all leased trucks display the name and identification number of the DBE, then:

1. The total value of the transportation services a DBE provides on the contract using trucks it owns, insures and operates using drivers it employs.

2. The total value of the transportation services a DBE provides on the contract using trucks leased from another DBE trucking firm, including an owner-operator who is certified as a DBE trucking firm, but only if the lease indicates that the DBE lessee has exclusive use of and control over the truck, or, if the truck is used for work for others with the DBE lessee's consent, then the lease must give the DBE lessee absolute priority over its use.

3. Only the value of the fee or commission the DBE receives under a lease arrangement with non-DBE firms for the lease of trucks used to provide transportation services on the contract but only if the lease indicates that the DBE has exclusive use of and control over the truck, or, if the truck

works for others with the DBE's consent, then the lease must give the DBE absolute priority over its use.

E. **Other Considerations:**

1. Firm Not Currently Certified: If a firm is not currently certified as a DBE in accordance with the standards of 49 CFR Part 26, subpart D, at the time of execution of the contract, do not count or report the firm's participation, except as provided in 49 CFR 26.87(i).

2. Firm Whose Eligibility Has Been Removed: Do not report the dollar value of work performed under a contract with a firm after it has ceased to be certified.

3. Payment: Do not report the participation of a DBE subcontractor until the amount to be counted toward the goal has been paid to the DBE.

4. Area of Specialty: Only the value of the dollars paid to the DBE firm for work that it performs in its Area of Specialty in which it is certified counts toward the DBE Participation Goal.

1.6. Procedure To Determine Bid/Proposal Compliance

The following Schedules and documents constitute the bidder's/proposer's DBE proposal, and must be submitted at the time of submission of proposals unless stated otherwise:

1.6.1. Schedule B: Affidavit of DBE/Non-DBE Joint Venture

Where the bidder/proposer's DBE proposal includes the participation of any DBE as a joint venturer prime or subcontractor, the bidder/proposer must submit, together with its bid/proposal, a Schedule B: Affidavit of DBE/Non-DBE Joint Venture with an attached copy of the joint venture agreement proposed among the parties. See Section1.4 above, "Joint Ventures," for detailed requirements.

1.6.2. Schedule C, C-1 or C-3: Letter of Intent to Perform as a Subcontractor, Consultant, Subconsultant or Material Supplier

Bidder/proposer must submit a Schedule C, C-1 or C-3, for each DBE included on its Schedule D, D-1, or D-3) (including any DBE joint venture partners), signed by the respective DBE firm. Schedule C and D must be used for contracts for construction work, and Schedule C-1 and Schedule D-1 for all other contracts, except for task order based contracts, where Schedule C-3 and Schedule D-3 must be used instead.

Each Schedule C, C-1 or C-3 must accurately detail the work to be performed by the DBE firm and the agreed rates and prices to be paid. Each Schedule must specify the percentage of the dollar value of the DBE's subcontract that will be sublet to non-DBE and DBE contractors and be signed and dated by the DBE. Each Schedule must also include a separate sheet as an attachment on which the DBE fully describes its proposed scope of work, including a description of the commercially useful function being performed by the DBE in its Area of Specialty. If a facsimile copy of Schedule C, C-1 or C-3 has been submitted with the bid or proposal, an executed original Schedule C-1 must be submitted promptly by the bidder/proposer for each DBE included on the Schedule D, D-1 or D-3 after the date of bid or proposal opening.

Failure to submit any Schedule C, C-1, or C-3 as required by this Section will result in a Chief Procurement Officer's determination that a bid or proposal is "non-responsive." The Chief Procurement Officer has the discretion to apply additional suitable sanctions against any bidder/proposer who fails to comply with these requirements. Appropriate sanctions may include, without limitation, forfeiture of the bidder/proposer's bid deposit, rejection of the bidder/proposer's bid, or suspension of the bidder/proposer's eligibility to enter into future contracting opportunities with the City.

1.6.3. Schedule D, D-1 or D-3: Affidavit of Prime Contractor Regarding DBEs

Bidders/Proposers must submit at the time specified in the request for proposals, a completed Schedule D or D-1 (or for Task Order based contracts, Schedule D-3, which must be submitted at the time specified in

the request for task order proposals) committing them to the utilization of each listed DBE firm (*but see*, Section1.7, Good Faith Efforts). The Schedule D, D-1 or D-3 must include the name, address, description of the work to be performed and dollar amount participation of each DBE subcontractor, supplier or consultant.

The bidder/proposer must use "Good Faith Efforts," as that term is described in 1.7 to meet the Contract DBE Participation Goal (i.e., the specific dollar amount of participation by each DBE firm included on its Schedule D-1 or D-3). The total dollar commitment to proposed DBE firms should equal the Contract DBE Participation Goal. Bidders/proposers are responsible for calculating the dollar equivalent of the Contract DBE Participation Goal as a percentage of their proposal. All commitments made by the bidder/proposer's Schedule D, D-1 or D-3 must conform to those presented in the submitted Schedule Cs, C-1s or C-3s.

A contractor may not modify its Compliance Plan after proposal opening except as directed by the Department of Procurement Services to correct minor errors or omissions. Bidders/proposers shall not be permitted to add DBEs after proposal opening to meet the Contract DBE Participation Goals, however, contractors are encouraged to add additional DBE vendors to their approved compliance plan during the performance of the contract when additional opportunities for participation are identified. Except in cases where substantial, documented justification is provided, the bidder/proposer or contractor shall not reduce the dollar commitment made to any DBE in order to achieve conformity between the Schedule Cs/ C-1s/C-3s and Schedule D/D-1/D-3. All terms and conditions for DBE participation on the contract must be negotiated and agreed to between the bidder/proposer or contractor and the DBE prior to submission of the Compliance Plan. If a proposed DBE ceases to be available after submission of the Compliance Plan, the bidder/proposer or contractor must comply with the provisions of Section 1.10, "DBE Substitutions."

1.6.4. Schedule F: Report of Subcontractor Solicitations
All Bidders/Proposers must submit, together with their bid/proposal, a completed Schedule F report containing information on all subcontractors, DBEs and non-DBEs, solicited for participation in the contract. The Schedule F shall include the following subcontractor information:

Contractor name; Address; Contact person; DBE status; Type of work solicited

1.6.5. Letters of Certification
A copy of each proposed DBE firm's Letter of Certification from the IL UCP must be submitted with the bid or proposal if currently certified. All Letters of Certification issued by the IL UCP include a statement of the DBE firm's Area of Specialty. The DBE firm's scope of work, as detailed by its Schedule C, C-1, or C-3 must conform to its stated Area of Specialty.

NOTE: Failure to submit the following information at the time of submission of bids or proposals (or in the case of task order contracts, the time of submission of task order proposals) will render the bid or proposal non-responsive: the **names and addresses** of DBE firms that will participate in the contract (Schedule D, D-1 or D-3), a **description of the work** that each DBE will perform (Schedule D, D-1 or D-3), the **dollar amount** of the participation of each DBE firm participating (Schedule D, D-1 or D-3), **written documentation** of the bidder/proposer's commitment to use a DBE subcontractor whose participation it submits to meet a contract goal (Schedule D, D-1 or D-3), **written confirmation from the DBE** that it is participating in the contract as provided in the prime contractor's commitment (Schedule C, C-1 or C-3), **affidavit of joint venture** when a DBE participates in the contract for DBE credit as a joint venturer (Schedule B), **report on all subcontractors solicited** for participation in the contract (Schedule F) and if the Contract goal is not met, **evidence of good faith efforts**, as set out in Section 1.7, "Good Faith Efforts".

1.6.6. Procedure
A. The submittals must have all blank spaces on the Schedule pages applicable to the subject specification filled in correctly.

Agreements between a bidder/proposer and a DBE in which the DBE promises not to provide subcontracting quotations to other bidder/proposers are prohibited.

B. During the period before award, the submitted documentation will be evaluated. As required under 49 CFR 26.109(c), all participants in the DBE Program, including the bidder/proposer, must give, upon request, earnest and prompt cooperation to the using department and the City's Chief Procurement Officer or his or her authorized delegate in submitting to interviews that may be necessary, or in allowing entry to places of business or in providing further documentation, or in soliciting the cooperation of a proposed DBE in providing such assistance. A bid/proposal may be treated as non-responsive by reason of the determination that the bidder/proposer was found to be unresponsive or uncooperative when asked for further information about the bid/proposal, or that false statements were made in the Schedules.

C. Bidders/Proposers will not be permitted to modify their DBE proposal except as permitted to do so by the City. All terms and conditions stipulated for prospective DBE sub-contractors or suppliers therefore should be satisfactorily negotiated prior to the submission to the City of the bidder/proposer's DBE commitment as part of the DBE proposal. If circumstances arise, where a proposed DBE becomes no longer available, the process described in Section 1.10DBE Substitutions, should be followed.

D. When necessary in the interest of time, the City may treat a bid/proposal as non-responsive instead of granting extended time for a bidder/proposer to replace DBEs named in the DBE proposal that are later determined to be ineligible or unavailable.

1.7. Good Faith Efforts

1.7.1. Demonstration of Good Faith Efforts

In order for a bid/proposal to be responsive, at the time specified in the request for bids/proposals, the bidder/proposer must demonstrate it has made Good Faith Efforts to meet the Contract DBE Participation Goal. The demonstration is made in the form of the documentation described in Section 1.7.2"Documenting Good Faith Efforts." The bidder/proposer can demonstrate it has made Good Faith Efforts to meet the Contract DBE Participation Goal either by:

A. Meeting the Contract DBE Participation Goal, as provided in these Special Conditions, and documenting commitments for participation by DBE firms sufficient for this purpose; or

B. Documenting, in the manner described below, adequate Good Faith Efforts to meet Contract DBE Participation Goal. This means bidders/proposers must submit at the time specified in the request for bids/proposals, documentation to show that it took all necessary and reasonable steps to achieve the Contract DBE Participation Goal or other requirements of 49 CFR Part 26, Appendix A, which, by their scope, intensity and appropriateness to the objective, could reasonably be expected to obtain sufficient DBE participation, even if the bidder/proposer was not fully successful. The following are examples of documented actions the City may consider to determine whether the bidder/proposer made Good Faith Efforts:

i. Soliciting through all reasonable and available means (e.g., attendance at pre-bid/proposal meetings, advertising and/or written notices) the interest of all certified DBEs who have the capability to perform the work of the contract. The bidder/proposer must solicit this interest within sufficient time to allow the DBEs to respond to the solicitation. The bidder/proposer must determine with certainty if the DBEs are interested by taking appropriate steps to follow up initial solicitations.

ii. Selecting portions of the work to be performed by DBEs in order to increase the likelihood that the Contract DBE Participation Goal will be achieved. This includes, where appropriate, breaking out contract work items into economically feasible units to facilitate DBE

participation, even where the prime contractor might otherwise prefer to perform these work items with its own forces.

iii. Providing interested DBEs with adequate information about the plans, specifications and requirements of the contract in a timely manner to assist them in responding to a solicitation.

iv. Negotiating in good faith with interested DBEs. It is the bidder/proposer's responsibility to make a portion of the work available to DBE subcontractors and suppliers and to select those portions of the work or material needs consistent with the available DBE subcontractors and suppliers, so as to facilitate DBE participation. Evidence of such negotiation includes the names, addresses and telephone numbers of DBEs that were considered; a description of the information provided regarding the plans and specifications for the work selected for subcontracting; and evidence as to why additional agreements could not be reached for DBEs to perform the work. A bidder/proposer using good business judgment would consider a number of factors in negotiating with subcontractors, including DBE subcontractors, and would take a firm's price and capabilities as well as contract goals into consideration. However, the fact that there may be some additional costs involved in finding and using DBEs is not in itself sufficient reason for a bidder/proposer's failure to meet the Contract DBE Participation Goal, as long as such costs are reasonable. Also, the ability or desire of a prime contractor to perform the work of a contract within its own organization does not relieve the bidder/proposer of the responsibility to make Good Faith Efforts. Prime contractors are not, however, required to accept higher quotes from DBEs if the price difference is excessive or unreasonable.

v. Not rejecting DBEs as being unqualified without sound reasons based on a thorough investigation of their capabilities. The DBE's standing within its industry, membership in specific groups, organization or associations and political or social affiliation (for example union vs. non-union employee status) are not legitimate causes for the rejection or non-solicitation of bids in the bidder/proposer's efforts to meet the Contract DBE Participation Goal.

vi. Making efforts to assist interested DBEs in obtaining bonding, lines of credit or insurance as required by the City or the bidder/proposer.

vii. Making efforts to assist interested DBEs in obtaining necessary equipment, supplies, materials, or related assistance or services.

viii. Effectively using the services of available minority/women community organizations and contractors' groups; local, state and federal minority/women business assistance offices; and other organizations as allowed on a case-by-case basis to provide assistance in the recruitment and placement of DBEs.

1.7.2. Documentation of Good Faith Efforts

The following 11 types of documentation, as applicable to the situation, will be considered by the Chief Procurement Officer in determining whether the bidder/proposer has made Good Faith Efforts to meet the Contract DBE Participation Goal. The documentation must be submitted at the time of submission of proposals or the proposal will be deemed non-responsive.

A. A detailed statement of efforts to identify and select portions of work identified in the request for proposals to certified DBE firms. Include copies of attendance logs from pre-bid/proposal meetings, advertisements and written notices, as applicable.

B. A listing of all DBE firms contacted that includes:

- names, address and telephone numbers of DBE firms solicited;
- date and time of contact;

- method of contact (written, telephone, facsimile transmittal, etc.)
- name of the person contacted.

C. Copies of letters or any other evidence of mailing that substantiates outreach to DBE vendors that includes:

- project identification and location;
- classification/commodity of work items for which quotations were sought;
- date, item and location for acceptance of subcontractor bid proposals;
- detailed statement which summarizes direct negotiations with appropriate DBE firms for specific portions of the work and indicates why negotiations were unsuccessful;
- affirmation that good faith efforts have been demonstrated by choosing subcontracting opportunities likely to achieve the Contract DBE Participation Goal by not imposing any limiting conditions which were not mandatory for all subcontractors; or denying the benefits ordinarily conferred on DBE subcontractors for the type of work that was solicited.

D. Copies of proposed plans for selecting portions of the work to be performed by DBEs in order to increase the likelihood that the Contract DBE Participation Goal will be achieved.

E. Evidence that the bidder/proposer negotiated in good faith with interested DBEs.

F. Evidence that the bidder/proposer did not reject DBEs as being unqualified without sound reasons based on a thorough investigation of their capabilities.

G. Evidence that the bidder/proposer made efforts to assist interested DBEs in obtaining bonding, lines of credit or insurance, as required by the City or the bidder/proposer.

H. Evidence that the bidder/proposer made efforts to assist interested DBEs in obtaining necessary equipment, supplies, materials or related assistance or services.

I. Evidence that the bidder/proposer has provided timely notice of the need for subcontractors to at least 50 percent of the DBEs listed in the City's Directory as being certified in the applicable Areas of Specialty. Proof of notification (e.g. certified mail receipt or facsimile transmittal receipt) prior to the date a bidder/proposer's DBE proposal is due is required for any proposal to be deemed responsive. The Chief Procurement Officer may contact the certified DBEs for verification of notification.

J. Evidence that subcontractor participation is excessively costly. Subcontractor participation will be deemed excessively costly when the DBE subcontractor proposal exceeds the average price quoted by more than 15 percent. In order to establish that a subcontractor's quote is excessively costly, the bidder/proposer must provide the following information at the time specified in the request for proposals:

1. A detailed statement of the work identified for DBE participation for which the bidder/proposer asserts the DBE quote(s) were excessively costly (in excess of 15 percent higher).

   (A) a listing of all potential subcontractors contacted for a quotation on that work item;

   (B) prices quoted for the subcontract in question by all such potential subcontractors for that work item.

OR

2. Other documentation that demonstrates to the satisfaction of the Chief Procurement Officer that the DBE proposals are excessively costly, even though not in excess of 15 percent higher than the average price quoted. This determination will be based on factors that include, but are not limited to the following:

(A) the City's estimate for the work under a specific subcontract;

(B) the bidder/proposer's own estimate for the work under the subcontract;

(C) an average of the bona fide prices quoted for the subcontract;

(D) demonstrated increase in other contract costs as a result of subcontracting to the DBE or other firm.

K. Copies of each DBE and non-DBE subcontractor quote submitted to the bidder when a non-DBE subcontractor was selected over a DBE for work on the contract. This is must be included in the documentation of Good Faith Efforts whenever a non-DBE subcontractor is selected over a DBE for work on the contract.

Note: The City reserves the right to modify this procedure when deemed appropriate.

1.8. **Reporting**

A. The Contractor will, not later than thirty (30) calendar days from the award of a contract by the City, execute formal contracts or purchase orders with the DBEs included in their approved DBE Utilization Plan. These written agreements will be made available to the Chief Procurement Officer upon request.

B. The contractor will be responsible for reporting payments to all subcontractors on a monthly basis in the form of an electronic audit. Upon the first payment issued by the City of Chicago to the contractor for services performed, on the first day of each month and every month thereafter, email and or fax audit notifications will be sent out to the contractor with instructions to report payments that have been made in the prior month to each subcontractor. The reporting of payments to all subcontractors must be entered into the Certification and Compliance Monitoring System (C2), or whatever reporting system is currently in place, on or before the fifteenth (15th) day of each month.

C. Once the prime contractor has reported payments made to each DBE, including zero dollar amount payments, the DBE will receive an email and or fax notification requesting them to log into the system and confirm payments received. All monthly confirmations must be reported on or before the 20th day of each month. Contractor and subcontractor reporting to the C2 system must be completed by the 25th of each month or payments may be withheld.

D. All subcontract agreements between the contractor and DBE firms or any first tier non-certified firm and lower tier DBE firms must contain language requiring the DBE to respond to email and/or fax notifications from the City of Chicago requiring them to report payments received for the prime or the non-certified firm.

Access to the Certification and Compliance Monitoring System (C2), which is a web based reporting system, can be found at: https://chicago.mwdbe.com

E. The Chief Procurement Officer or any party designated by the Chief Procurement Officer, shall have access to the contractor's books and records, including without limitation payroll records, tax returns and records and books of account, to determine the contractor's compliance with its commitment to DBE participation and the status of any DBE performing any portion of the contract. This provision shall be in addition to, and not a substitute for, any other provision allowing inspection of the contractor's records by any officer or official of the City for any purpose.

F. The contractor shall maintain records of all relevant data with respect to the utilization of DBEs retaining these records for a period that is the longer of five years or as required by relevant retention schedules after

final acceptance of the work. Full access to these records shall be granted to City, federal or state authorities or other authorized persons.

G. The contractor must make available upon request a copy of all DBE subcontracts. The contractor must ensure that all subcontracts or agreements with DBEs to supply labor or materials require that the subcontract and all lower tier subcontractors be performed in accordance with the provisions of 49 CFR Part 26.

1.9. **Required Assurance**
Contractor must comply with, and each subcontract Contractor signs with a subcontractor must include, the following assurance:

The Contractor, sub recipient or subcontractor shall not discriminate on the basis of race, color, national origin, or sex in the performance of this contract. The Contractor shall carry out applicable requirements of 49 CFR Part 26 in the award and administration of DOT- assisted contracts. Failure by the Contractor to carry out these requirements is a material breach of this Contract, which may result in the termination of this Contract or such other remedy as the recipient deems appropriate, which may include, but is not limited to, (1) withholding monthly progress payments, (2) assessing sanctions, (3) liquidated damages, and/or (4) disqualifying the Contractor from future bidding as non-responsible.

1.10. **DBE Substitutions**
A. Arbitrary changes by the bidder/proposer of the commitments earlier certified in the Schedule D, D-1 or D-3 are prohibited. Further, after once entering into each approved DBE subcontract, the bidder/proposer may neither terminate the subcontract, nor reduce the scope of the work to be performed by the DBE, nor decrease the price to the DBE, without in each instance (i) having just cause, including situations where bidder/proposer's contract with the DBE includes termination for convenience; (ii) making Good Faith Efforts to find another DBE subcontractor to substitute for the original DBE (these Good Faith Efforts must be directed at finding another DBE to perform at least the same amount of work under the contract as the DBE that was terminated, to the extent needed to meet the Contract DBE Participation Goal); and (iii) receiving the prior written approval of the City in all instances.

Unless the City provides written approval for the substitution of a DBE, the contractor shall not be entitled to any payment for work or material unless it is performed or supplied by the listed DBE.

1. The bidder/proposer must give the Chief Procurement Officer reasons that justify the bidder/proposer's terminating a DBE, reducing the scope of work to be performed by a DBE, or decreasing the price to a DBE. The substitution procedure will be as follows:

   a) The bidder/proposer/contractor must notify the Chief Procurement Officer as soon as possible in writing of an apparent necessity to reduce or terminate a DBE subcontract and to propose a substitute firm for some phase of work, if needed in order to sustain the fulfillment of the Contract DBE Participation Goal. Prior to submitting notice to the Chief Procurement Officer, bidder/proposer/contractor must give notice in writing to the DBE subcontractor, with a copy to the Chief Procurement Officer, of its intent to request to terminate and/or substitute, and the reason for the request.

   b) Bidder/proposer/contractor must give the DBE five days to respond to the notice and advise the City and bidder/proposer/contractor of the reasons, if any, why it objects to the proposed termination of its subcontract and why the City should not approve the bidder/proposer/contractor's action. If required in a particular case as a matter of public necessity (e.g., safety), the City may provide a response period shorter than five days.

2. The bidder/proposer/contractor's notification should include the specific reasons for the proposed substitution. Stated reasons which would be acceptable include the following examples:

   a) The listed DBE subcontractor fails or refuses to execute a written contract;

b) The listed DBE subcontractor fails or refuses to perform the work of its subcontract in a way consistent with normal industry standards. Provided, however, that good cause does not exist if the failure or refusal of the DBE subcontractor to perform its work on the subcontract results from the bad faith or discriminatory action of the prime contractor;

c) The listed DBE subcontractor fails or refuses to meet the prime contractor's reasonable, nondiscriminatory bond requirements.

d) The listed DBE subcontractor becomes bankrupt, insolvent, or exhibits credit unworthiness;

e) The listed DBE subcontractor is ineligible to work on public works projects because of suspension and debarment proceedings pursuant 2 CFR Parts 180, 215 and 1,200 or applicable state law;

f) The City has determined that the listed DBE subcontractor is not responsible;

g) The listed DBE subcontractor voluntarily withdraws from the project and provides to the City written notice of its withdrawal;

h) The listed DBE is ineligible to receive DBE credit for the type of work required;

i) A DBE owner dies or becomes disabled with the result that the listed DBE contractor is unable to complete its work on the contract;

j) Other documented good cause that the City may determine compels the termination of the DBE subcontractor.

The bidder/proposer/contractor's position in these cases must be fully explained and supported with adequate documentation. Stated reasons which will not be acceptable include: A replacement firm has been recruited to perform the same work under terms more advantageous to the prime contractor; issues about performance by the committed DBE were disputed (unless every reasonable effort has already been made to have the issues resolved or mediated satisfactorily); a DBE has requested reasonable price escalation which may be justified due to unforeseen circumstances; or the bidder/proposer seeks to terminate a DBE it relied upon to obtain the contract so that the bidder/proposer can self-perform the work for which the DBE subcontractor was engaged.

3. The bidder/proposer/contractor's notification should include the name, address and principal official of any proposed substitute DBE and the dollar value and scope of work of the proposed subcontract. Attached should be all the same DBE affidavits, documents, and Letter of Intent which are required of bidders, as enumerated in Section, Procedure to Determine Bid Compliance.

4. The City will evaluate the submitted documentation, and respond within 15 working days to the request for approval of a substitution. The response may be in the form of a request for more information, or a request for an interview to clarify or mediate the problem. In the case of an expressed emergency need to receive the necessary decision for the sake of job progress, the City will instead respond as soon as practicable.

5. If termination of a DBE subcontractor is approved, or a DBE subcontractor fails to complete its work on the contract for any reason, bidder/proposer/contractor must make Good Faith Efforts to replace that subcontractor. These good faith efforts shall be directed at finding another DBE to perform at least the same amount of work under the contract as the DBE that was terminated, to the extent needed to meet the contract. The good faith efforts shall be documented by the bidder/proposer. If the City requests documentation, the bidder/proposer/contractor shall submit the documentation within 7 days, which may be extended for an additional 7 days if necessary at the request of the bidder/proposer/ contractor. The City shall provide a written determination to the bidder/proposer/contractor stating whether or not good faith efforts have been demonstrated.

6. Actual substitution of a replacement DBE to fulfill the Contract DBE Participation Goal may not be made before City approval is given of the acceptability of the substitute DBE. A subcontract with the substitute DBE subcontractor must be executed within five working days following the City's approval, and a copy of the DBE subcontract with signatures of both parties to the agreement should be submitted immediately to the City.

B. The City will not approve extra payment for escalated costs incurred by the bidder/proposer/contractor when a substitution of subcontractors becomes necessary for the bidder/proposer/contractor to comply with the Contract DBE Participation Goal.

C. The Chief Procurement Officer will make the determination of whether the bidder/proposer/contractor has exercised Good Faith Efforts.

1.11. **Non-Compliance**

A. Each of the following constitutes a material breach of this contract and entitles the City to declare a default, terminate the contract, and exercise those remedies provided for in the contract, at law or in equity:

1. failure to make good faith efforts to satisfy the Contract DBE Participation Goal proposed by the bidder/proposer and accepted by the City; and

2. the contractor, a subcontractor or supplier is disqualified as a DBE, where the status was a factor in the contract award and was misrepresented by the contractor.

If the contractor is determined by the City not to have been involved in any misrepresentation of the status of a disqualified subcontractor or supplier, the contractor must discharge the disqualified subcontractor or supplier and, if possible, identify and engage a qualified DBE as its replacement. Furthermore, contractor's continued eligibility to enter into future contracting arrangements with the City may be jeopardized as a result of non-compliance. The City may withhold payments due to the contractor until corrective action is taken.

B. The contractor's failure to comply with the Contract DBE Participation Goal proposed by the bidder/proposer and accepted by the City, or failure to comply with the provisions of Section IX, DBE Substitutions, will entitle the affected DBEs to recover from the contractor damages suffered by these DBEs as a result of such under- or non-utilization, but this provision will not apply to the extent the under- or non-utilization occurs pursuant to Good Faith Efforts approved by the City, provided that this paragraph 1.11.B shall apply only to contracts funded by the Federal Aviation Administration. *See* 1.12, "Arbitration."

C. For contracts funded in whole, or in part, by Federal Highway Administration, Federal Transit Administration, Illinois Department of Transportation: When the contract requirements are completed, in the event that the City has determined that the bidder/proposer/contractor failed to comply with the Contract DBE Participation Goal proposed by the bidder/proposer/contractor and accepted by the City, the City will thereby be damaged in the failure to provide the benefit of participation to DBEs to the degree set forth in the Special Conditions. Therefore, in such case of non-compliance, the City will deduct as liquidated damages cumulative amounts computed as follows:

For each one percent (or fraction thereof) of shortfall toward the Contract DBE Participation Goal, one percent of the base bid for this contract shall be surrendered by the bidder/proposer to the City of Chicago in payment as liquidated damages.

1.12. **Arbitration (FAA Funded Contracts)**

A. The contractor hereby agrees that any disputes between the contractor and any affected DBE regarding damages as a result of contractor's under- or non-utilization of the DBE on any contract funded, in whole or in part, by the Federal Aviation Administration may, at the sole discretion of the DBE, be resolved by binding arbitration before an independent arbitrator other than the City, with reasonable expenses, including attorneys' fees, being recoverable by a prevailing DBE in accordance with applicable City regulations. This

provision is intended for the benefit of any DBEs affected by under- or non-utilization and grants them specific third party beneficiary rights. In cases where deemed appropriate by the Contract Compliance Administrator, notification of a dispute by the affected DBE or prime contractor may lead to the withholding of final contract payouts until the City receives a copy of the final arbitration decision. Any rights conferred by this regulation are non-waivable and take precedence over any agreement to the contrary, including those contained in a subcontract, suborder or communicated orally between a contractor and a DBE.

B. If requested by the DBE, the DBE has the right to arbitrate. A DBE desiring to arbitrate must contact the contractor in writing to initiate the arbitration process. Except as otherwise agreed to in writing by the affected parties, subject to the limitation contained in the last sentence of the previous paragraph, within 10 days of the contractor receiving notification of the intent to arbitrate from the DBE the above-described disputes must be arbitrated in accordance with the Commercial Arbitration Rules of the American Arbitration Association (AAA), a not-for-profit agency, with an office at 225 North Michigan Avenue, Suite 1840, Chicago, Illinois 60601-7601. [Phone: (312) 616-6560; Fax: (312) 819-0404]. All such arbitrations must be initiated by the DBE filing a demand for arbitration with the AAA; must be conducted by the AAA; and held in Chicago, Illinois.

C. All fees of the arbitrator are the initial responsibility of the DBE; the arbitrator, however, is authorized to award reasonable expenses, including attorney's and arbitrator fees, as damages to a prevailing DBE.

D. The DBE must send the City a copy of the "Demand for Arbitration" within 10 days after it is filed with the AAA. The DBE also must send the City a copy of the decision of the arbitrator within 10 days of receiving the decision. Judgment upon the award rendered by the arbitrator may be entered in any court of competent jurisdiction.

1.13. Prime Contractor Assistance

Prime contractors should themselves assist DBEs in overcoming barriers to program participation. The following instruments of assistance, for example, should be used as applicable:

- Developing solicitations of sub-contract bids so as to increase potential DBE participation. This can take the form of breaking down large subcontracts into smaller ones, and of issuing notice of solicitations in a timely manner.
- Providing technical assistance and guidance in the bidding, estimating and scheduling processes.
- Considering purchasing supplies and/or leasing the required equipment for a job, then subcontracting only for the expertise required to perform the work.
- Providing accelerated payments or establishing pro-rated payment and delivery schedules so as to minimize cash flow problems faced by small firms.
- Providing, waiving or reducing subcontractor bonding requirements; allowing stage bonding (bonding carried over from one project stage to the next).
- Providing a pre-bid conference for potential sub-contractors.

In addition to the employment of DBEs, the bidder/proposer should consider the utilization of DBEs in fields indirectly related to the contract, such as banking, office equipment sales, vehicles sales, mechanical repair, legal and accounting services, building security, graphics and advertising, etc.

1.14. Record Keeping

The Contractor shall maintain records of all relevant data with respect to the utilization of DBEs, retaining these records for a period that is the longer of five years or as required by relevant retention schedules after final acceptance of the work. Full access to these records shall be granted to the City of Chicago, Federal or State authorities in this project, the U. S. Department of Justice, or any duly authorized representatives thereof.

1.15. **Assistance Agencies**
Small business guaranteed loans, surety bond guarantees; 8(a) certification:

U. S. Small Business Administration
500 W. Madison Street, Suite 1250
Chicago, Illinois 60601
Attention: Robert Conner
(312)353-4528

S.B.A. Bond Guarantee Program/Surety Bonds
500 W. Madison Street, Suite 1250
Chicago, Illinois 60601
(312)353-7331

S.B.A. Procurement Assistance
500 W. Madison Street, Suite 1250
Chicago, Illinois 60601
Attention: Robert P. Murphy, Assistant Regional Administrator
(312)744-1895

City of Chicago Web site:
www.cityofchicago.org/purchasing

Information on DBE availability in the manufacturing, sales or supplies, and related fields (direct assistance from 42 regional affiliates located throughout the U.S.):

National Minority Supplier
Development Council, Inc.
1040 Avenue of the Americas – 2nd Floor
New York, New York 10018
Attention: Harriet R. Michel
(212)944-2430

Chicago Minority Business Development Council
11 South LaSalle Street – Suite 850
Chicago, Illinois 60603
Attention: Tracye Smith
(312)263-0105

1.16. **Equal Employment Opportunity**
Compliance with DBE requirements will not diminish or supplant Equal Employment Opportunity and Civil Rights provisions as specified elsewhere in this contract and as they relate to prime contractor and subcontractor obligations.

XXIX. FHWA-FORM 1273

Contractor is required to adhere to FHWA-1273 and any changes that may be made to these requirements. Information may be found at: http://www.fhwa.dot.gov/programadmin/contracts/1273/

FHWA-1273 -- Revised May 1, 2012

REQUIRED CONTRACT PROVISIONS
FEDERAL-AID CONSTRUCTION CONTRACTS

I. General
II. Nondiscrimination
III. Nonsegregated Facilities
IV. Davis-Bacon and Related Act Provisions
V. Contract Work Hours and Safety Standards Act Provisions
VI. Subletting or Assigning the Contract
VII. Safety: Accident Prevention
VIII. False Statements Concerning Highway Projects
IX. Implementation of Clean Air Act and Federal Water Pollution Control Act
X. Compliance with Governmentwide Suspension and Debarment Requirements
XI. Certification Regarding Use of Contract Funds for Lobbying

ATTACHMENTS

A. Employment and Materials Preference for Appalachian Development Highway System or Appalachian Local Access Road Contracts (included in Appalachian contracts only)

I. GENERAL

1. Form FHWA-1273 must be physically incorporated in each construction contract funded under Title 23 (excluding emergency contracts solely intended for debris removal). The contractor (or subcontractor) must insert this form in each subcontract and further require its inclusion in all lower tier subcontracts (excluding purchase orders, rental agreements and other agreements for supplies or services).

The applicable requirements of Form FHWA-1273 are incorporated by reference for work done under any purchase order, rental agreement or agreement for other services. The prime contractor shall be responsible for compliance by any subcontractor, lower-tier subcontractor or service provider.

Form FHWA-1273 must be included in all Federal-aid design-build contracts, in all subcontracts and in lower tier subcontracts (excluding subcontracts for design services, purchase orders, rental agreements and other agreements for supplies or services). The design-builder shall be responsible for compliance by any subcontractor, lower-tier subcontractor or service provider.

Contracting agencies may reference Form FHWA-1273 in bid proposal or request for proposal documents, however, the Form FHWA-1273 must be physically incorporated (not referenced) in all contracts, subcontracts and lower-tier subcontracts (excluding purchase orders, rental agreements and other agreements for supplies or services related to a construction contract).

2. Subject to the applicability criteria noted in the following sections, these contract provisions shall apply to all work performed on the contract by the contractor's own organization and with the assistance of workers under the contractor's immediate superintendence and to all work performed on the contract by piecework, station work, or by subcontract.

3. A breach of any of the stipulations contained in these Required Contract Provisions may be sufficient grounds for withholding of progress payments, withholding of final payment, termination of the contract, suspension / debarment or any other action determined to be appropriate by the contracting agency and FHWA.

4. Selection of Labor: During the performance of this contract, the contractor shall not use convict labor for any purpose within the limits of a construction project on a Federal-aid highway unless it is labor performed by convicts who are on parole, supervised release, or probation. The term Federal-aid highway does not include roadways functionally classified as local roads or rural minor collectors.

II. NONDISCRIMINATION

The provisions of this section related to 23 CFR Part 230 are applicable to all Federal-aid construction contracts and to all related construction subcontracts of $10,000 or more. The provisions of 23 CFR Part 230 are not applicable to material supply, engineering, or architectural service contracts.

In addition, the contractor and all subcontractors must comply with the following policies: Executive Order 11246, 41 CFR 60, 29 CFR 1625-1627, Title 23 USC Section 140, the Rehabilitation Act of 1973, as amended (29 USC 794), Title VI of the Civil Rights Act of 1964, as amended, and related regulations including 49 CFR Parts 21, 26 and 27; and 23 CFR Parts 200, 230, and 633.

The contractor and all subcontractors must comply with: the requirements of the Equal Opportunity Clause in 41 CFR 60-1.4(b) and, for all construction contracts exceeding $10,000, the Standard Federal Equal Employment Opportunity Construction Contract Specifications in 41 CFR 60-4.3.

Note: The U.S. Department of Labor has exclusive authority to determine compliance with Executive Order 11246 and the policies of the Secretary of Labor including 41 CFR 60, and 29 CFR 1625-1627. The contracting agency and the FHWA have the authority and the responsibility to ensure compliance with Title 23 USC Section 140, the Rehabilitation Act of 1973, as amended (29 USC 794), and Title VI of the Civil Rights Act of 1964, as amended, and related regulations including 49 CFR Parts 21, 26 and 27; and 23 CFR Parts 200, 230, and 633.

The following provision is adopted from 23 CFR 230, Appendix A, with appropriate revisions to conform to the U.S. Department of Labor (US DOL) and FHWA requirements.

1. Equal Employment Opportunity: Equal employment opportunity (EEO) requirements not to discriminate and to take affirmative action to assure equal opportunity as set forth under laws, executive orders, rules, regulations (28 CFR 35, 29 CFR 1630, 29 CFR 1625-1627, 41 CFR 60 and 49 CFR 27) and orders of the Secretary of Labor as modified by the provisions prescribed herein, and imposed pursuant to 23 U.S.C. 140 shall constitute the EEO and specific affirmative action standards for the contractor's project activities under this contract. The provisions of the Americans with Disabilities Act of 1990 (42 U.S.C. 12101 et seq.) set forth under 28 CFR 35 and 29 CFR 1630 are incorporated by reference in this contract. In the execution of this contract, the contractor agrees to comply with the following minimum specific requirement activities of EEO:

a. The contractor will work with the contracting agency and the Federal Government to ensure that it has made every good faith effort to provide equal opportunity with respect to all of its terms and conditions of employment and in their review of activities under the contract.

b. The contractor will accept as its operating policy the following statement:

"It is the policy of this Company to assure that applicants are employed, and that employees are treated during employment, without regard to their race, religion, sex, color, national origin, age or disability. Such action shall include: employment, upgrading, demotion, or transfer; recruitment or recruitment advertising; layoff or termination; rates of pay or other forms of compensation; and selection for training, including apprenticeship, pre-apprenticeship, and/or on-the-job training."

2. EEO Officer: The contractor will designate and make known to the contracting officers an EEO Officer who will have the responsibility for and must be capable of effectively administering and promoting an active EEO program and who must be assigned adequate authority and responsibility to do so.

3. Dissemination of Policy: All members of the contractor's staff who are authorized to hire, supervise, promote, and discharge employees, or who recommend such action, or who are substantially involved in such action, will be made fully cognizant of, and will implement, the contractor's EEO policy and contractual responsibilities to provide EEO in each grade and classification of employment. To ensure that the above agreement will be met, the following actions will be taken as a minimum:

a. Periodic meetings of supervisory and personnel office employees will be conducted before the start of work and then not less often than once every six months, at which time the contractor's EEO policy and its implementation will be reviewed and explained. The meetings will be conducted by the EEO Officer.

b. All new supervisory or personnel office employees will be given a thorough indoctrination by the EEO Officer, covering all major aspects of the contractor's EEO obligations within thirty days following their reporting for duty with the contractor.

c. All personnel who are engaged in direct recruitment for the project will be instructed by the EEO Officer in the contractor's procedures for locating and hiring minorities and women.

d. Notices and posters setting forth the contractor's EEO policy will be placed in areas readily accessible to employees, applicants for employment and potential employees.

e. The contractor's EEO policy and the procedures to implement such policy will be brought to the attention of employees by means of meetings, employee handbooks, or other appropriate means.

4. Recruitment: When advertising for employees, the contractor will include in all advertisements for employees the notation: "An Equal Opportunity Employer." All such advertisements will be placed in publications having a large circulation among minorities and women in the area from which the project work force would normally be derived.

a. The contractor will, unless precluded by a valid bargaining agreement, conduct systematic and direct recruitment through public and private employee referral sources likely to yield qualified minorities and women. To meet this requirement, the contractor will identify sources of potential minority group employees, and establish with such identified sources procedures whereby minority and women applicants may be referred to the contractor for employment consideration.

b. In the event the contractor has a valid bargaining agreement providing for exclusive hiring hall referrals, the contractor is expected to observe the provisions of that agreement to the extent that the system meets the contractor's compliance with EEO contract provisions. Where implementation of such an agreement has the effect of discriminating against minorities or women, or obligates the contractor to do the same, such implementation violates Federal nondiscrimination provisions.

c. The contractor will encourage its present employees to refer minorities and women as applicants for employment. Information and procedures with regard to referring such applicants will be discussed with employees.

5. Personnel Actions: Wages, working conditions, and employee benefits shall be established and administered, and personnel actions of every type, including hiring, upgrading, promotion, transfer, demotion, layoff, and termination, shall be taken without regard to race, color, religion, sex, national origin, age or disability. The following procedures shall be followed:

a. The contractor will conduct periodic inspections of project sites to insure that working conditions and employee facilities do not indicate discriminatory treatment of project site personnel.

b. The contractor will periodically evaluate the spread of wages paid within each classification to determine any evidence of discriminatory wage practices.

c. The contractor will periodically review selected personnel actions in depth to determine whether there is evidence of discrimination. Where evidence is found, the contractor will promptly take corrective action. If the review indicates that the discrimination may extend beyond the actions reviewed, such corrective action shall include all affected persons.

d. The contractor will promptly investigate all complaints of alleged discrimination made to the contractor in connection with its obligations under this contract, will attempt to resolve such complaints, and will take appropriate corrective action within a reasonable time. If the investigation indicates that the discrimination may affect persons other than the complainant, such corrective action shall include such other persons. Upon completion of each investigation, the contractor will inform every complainant of all of their avenues of appeal.

6. Training and Promotion:

a. The contractor will assist in locating, qualifying, and increasing the skills of minorities and women who are applicants for employment or current employees. Such efforts should be aimed at developing full journey level status employees in the type of trade or job classification involved.

b. Consistent with the contractor's work force requirements and as permissible under Federal and State regulations, the contractor shall make full use of training programs, i.e., apprenticeship, and on-the-job training programs for the geographical area of contract performance. In the event a special provision for training is provided under this contract, this subparagraph will be superseded as indicated in the special provision. The contracting agency may reserve training positions for persons who receive welfare assistance in accordance with 23 U.S.C. 140(a).

c. The contractor will advise employees and applicants for employment of available training programs and entrance requirements for each.

d. The contractor will periodically review the training and promotion potential of employees who are minorities and women and will encourage eligible employees to apply for such training and promotion.

7. Unions: If the contractor relies in whole or in part upon unions as a source of employees, the contractor will use good faith efforts to obtain the cooperation of such unions to increase opportunities for minorities and women. Actions by the contractor, either directly or through a contractor's association acting as agent, will include the procedures set forth below:

a. The contractor will use good faith efforts to develop, in cooperation with the unions, joint training programs aimed toward qualifying more minorities and women for membership in the unions and increasing the skills of minorities and women so that they may qualify for higher paying employment.

b. The contractor will use good faith efforts to incorporate an EEO clause into each union agreement to the end that such union will be contractually bound to refer applicants without regard to their race, color, religion, sex, national origin, age or disability.

c. The contractor is to obtain information as to the referral practices and policies of the labor union except that to the extent such information is within the exclusive possession of the labor union and such labor union refuses to furnish such information to the contractor, the contractor shall so certify to the contracting agency and shall set forth what efforts have been made to obtain such information.

d. In the event the union is unable to provide the contractor with a reasonable flow of referrals within the time limit set forth in the collective bargaining agreement, the contractor will, through independent recruitment efforts, fill the employment vacancies without regard to race, color, religion, sex, national origin, age or disability; making full efforts to obtain qualified and/or qualifiable minorities and women. The failure of a union to provide sufficient referrals (even though it is obligated to provide exclusive referrals under the terms of a collective bargaining agreement) does not relieve the contractor from the requirements of this paragraph. In the event the union referral practice prevents the contractor from meeting the obligations pursuant to Executive Order 11246, as amended, and these special provisions, such contractor shall immediately notify the contracting agency.

8. Reasonable Accommodation for Applicants / Employees with Disabilities: The contractor must be familiar with the requirements for and comply with the Americans with Disabilities Act and all rules and regulations established there under. Employers must provide reasonable accommodation in all employment activities unless to do so would cause an undue hardship.

9. Selection of Subcontractors, Procurement of Materials and Leasing of Equipment: The contractor shall not discriminate on the grounds of race, color, religion, sex, national origin, age or disability in the selection and retention of subcontractors, including procurement of materials and leases of equipment. The contractor shall take all necessary and reasonable steps to ensure nondiscrimination in the administration of this contract.

a. The contractor shall notify all potential subcontractors and suppliers and lessors of their EEO obligations under this contract.

b. The contractor will use good faith efforts to ensure subcontractor compliance with their EEO obligations.

10. Assurance Required by 49 CFR 26.13(b):

a. The requirements of 49 CFR Part 26 and the State DOT's U.S. DOT-approved DBE program are incorporated by reference.

b. The contractor or subcontractor shall not discriminate on the basis of race, color, national origin, or sex in the performance of this contract. The contractor shall carry out applicable requirements of 49 CFR Part 26 in the award and administration of DOT-assisted contracts. Failure by the contractor to carry out these requirements is a material breach of this contract, which may result in the termination of

this contract or such other remedy as the contracting agency deems appropriate.

11. Records and Reports: The contractor shall keep such records as necessary to document compliance with the EEO requirements. Such records shall be retained for a period of three years following the date of the final payment to the contractor for all contract work and shall be available at reasonable times and places for inspection by authorized representatives of the contracting agency and the FHWA.

a. The records kept by the contractor shall document the following:

(1) The number and work hours of minority and non-minority group members and women employed in each work classification on the project;

(2) The progress and efforts being made in cooperation with unions, when applicable, to increase employment opportunities for minorities and women; and

(3) The progress and efforts being made in locating, hiring, training, qualifying, and upgrading minorities and women;

b. The contractors and subcontractors will submit an annual report to the contracting agency each July for the duration of the project, indicating the number of minority, women, and non-minority group employees currently engaged in each work classification required by the contract work. This information is to be reported on Form FHWA-1391. The staffing data should represent the project work force on board in all or any part of the last payroll period preceding the end of July. If on-the-job training is being required by special provision, the contractor will be required to collect and report training data. The employment data should reflect the work force on board during all or any part of the last payroll period preceding the end of July.

III. NONSEGREGATED FACILITIES

This provision is applicable to all Federal-aid construction contracts and to all related construction subcontracts of $10,000 or more.

The contractor must ensure that facilities provided for employees are provided in such a manner that segregation on the basis of race, color, religion, sex, or national origin cannot result. The contractor may neither require such segregated use by written or oral policies nor tolerate such use by employee custom. The contractor's obligation extends further to ensure that its employees are not assigned to perform their services at any location, under the contractor's control, where the facilities are segregated. The term "facilities" includes waiting rooms, work areas, restaurants and other eating areas, time clocks, restrooms, washrooms, locker rooms, and other storage or dressing areas, parking lots, drinking fountains, recreation or entertainment areas, transportation, and housing provided for employees. The contractor shall provide separate or single-user restrooms and necessary dressing or sleeping areas to assure privacy between sexes.

IV. DAVIS-BACON AND RELATED ACT PROVISIONS

This section is applicable to all Federal-aid construction projects exceeding $2,000 and to all related subcontracts and lower-tier subcontracts (regardless of subcontract size). The requirements apply to all projects located within the right-of-way of a roadway that is functionally classified as Federal-aid highway. This excludes roadways functionally classified as local roads or rural minor collectors, which are exempt. Contracting agencies may elect to apply these requirements to other projects.
The following provisions are from the U.S. Department of Labor regulations in 29 CFR 5.5 “Contract provisions and related matters” with minor revisions to conform to the FHWA-1273 format and FHWA program requirements.

1. Minimum wages

a. All laborers and mechanics employed or working upon the site of the work, will be paid unconditionally and not less often than once a week, and without subsequent deduction or rebate on any account (except such payroll deductions as are permitted by regulations issued by the Secretary of Labor under the Copeland Act (29 CFR part 3)), the full amount of wages and bona fide fringe benefits (or cash equivalents thereof) due at time of payment computed at rates not less than those contained in the wage determination of the Secretary of Labor which is attached hereto and made a part hereof, regardless of any contractual relationship which may be alleged to exist between the contractor and such laborers and mechanics.
Contributions made or costs reasonably anticipated for bona fide fringe benefits under section 1(b)(2) of the Davis-Bacon Act on behalf of laborers or mechanics are considered wages paid to such laborers or mechanics, subject to the provisions of paragraph 1.d. of this section; also, regular contributions made or costs incurred for more than a weekly period (but not less often than quarterly) under plans, funds, or programs which cover the particular weekly period, are deemed to be constructively made or incurred during such weekly period. Such laborers and mechanics shall be paid the appropriate wage rate and fringe benefits on the wage determination for the classification of work actually performed, without regard to skill, except as provided in 29 CFR 5.5(a)(4). Laborers or mechanics performing work in more than one classification may be compensated at the rate specified for each classification for the time actually worked therein: Provided, That the employer's payroll records accurately set forth the time spent in each classification in which work is performed. The wage determination (including any additional classification and wage rates conformed under paragraph 1.b. of this section) and the Davis-Bacon poster (WH–1321) shall be posted at all times by the contractor and its subcontractors at the site of the work in a prominent and accessible place where it can be easily seen by the workers.

b. (1) The contracting officer shall require that any class of laborers or mechanics, including helpers, which is not listed in the wage determination and which is to be employed under the contract shall be classified in conformance with the wage determination. The contracting officer shall approve an additional classification and wage rate and fringe benefits therefore only when the following criteria have been met:

(i) The work to be performed by the classification requested is not performed by a classification in the wage determination; and

(ii) The classification is utilized in the area by the construction industry; and

(iii) The proposed wage rate, including any bona fide fringe benefits, bears a reasonable relationship to the wage rates contained in the wage determination.

(2) If the contractor and the laborers and mechanics to be employed in the classification (if known), or their representatives, and the contracting officer agree on the classification and wage rate (including the amount designated for fringe benefits where appropriate), a report of the action taken shall be sent by the contracting officer to the Administrator of the Wage and Hour Division, Employment Standards Administration, U.S. Department of Labor, Washington, DC 20210. The Administrator, or an authorized representative, will approve, modify, or disapprove every additional classification action within 30 days of receipt and so advise the contracting officer or will notify the contracting officer within the 30-day period that additional time is necessary.

(3) In the event the contractor, the laborers or mechanics to be employed in the classification or their representatives, and the contracting officer do not agree on the proposed classification and wage rate (including the amount designated for fringe benefits, where appropriate), the contracting officer shall refer the questions, including the views of all interested parties and the recommendation of the contracting officer, to the Wage and Hour Administrator for determination. The Wage and Hour Administrator, or an authorized representative, will issue a determination within 30 days of receipt and so advise the contracting officer or will notify the contracting officer within the 30-day period that additional time is necessary.

(4) The wage rate (including fringe benefits where appropriate) determined pursuant to paragraphs 1.b.(2) or 1.b.(3) of this section, shall be paid to all workers performing work in the classification under this contract from the first day on which work is performed in the classification.

c. Whenever the minimum wage rate prescribed in the contract for a class of laborers or mechanics includes a fringe benefit which is not expressed as an hourly rate, the contractor shall either pay the benefit as stated in the wage determination or shall pay another bona fide fringe benefit or an hourly cash equivalent thereof.

d. If the contractor does not make payments to a trustee or other third person, the contractor may consider as part of the wages of any laborer or mechanic the amount of any costs reasonably anticipated in providing bona fide fringe benefits under a plan or program, Provided, That the Secretary of Labor has found, upon the written request of the contractor, that the applicable standards of the Davis-Bacon Act have been met. The Secretary of Labor may require the contractor to set aside in a separate account assets for the meeting of obligations under the plan or program.

2. Withholding

The contracting agency shall upon its own action or upon written request of an authorized representative of the Department of Labor, withhold or cause to be withheld from the contractor under this contract, or any other Federal contract with the same prime contractor, or any other federally-assisted contract subject to Davis-Bacon prevailing wage requirements, which is held by the same prime contractor, so much of the accrued payments or advances as may be considered necessary to pay laborers and mechanics, including apprentices, trainees, and helpers, employed by the contractor or any subcontractor the full amount of wages required by the contract. In the event of failure to pay any laborer or mechanic, including any apprentice, trainee, or helper, employed or working on the site of the work, all or part of the wages required by the contract, the contracting agency may, after written notice to the contractor, take such action as may be necessary to cause the suspension of any further payment, advance, or guarantee of funds until such violations have ceased.

3. Payrolls and basic records

a. Payrolls and basic records relating thereto shall be maintained by the contractor during the course of the work and preserved for a period of three years thereafter for all laborers and mechanics working at the site of the work. Such records shall contain the name, address, and social security number of each such worker, his or her correct classification, hourly rates of wages paid (including rates of contributions or costs anticipated for bona fide fringe benefits or cash equivalents thereof of the types described in section 1(b)(2)(B) of the Davis-Bacon Act), daily and weekly number of hours worked, deductions made and actual wages paid. Whenever the Secretary of Labor has found under 29 CFR 5.5(a)(1)(iv) that the wages of any laborer or mechanic include the amount of any costs reasonably anticipated in providing benefits under a plan or program described in section 1(b)(2)(B) of the Davis-Bacon Act, the contractor shall maintain records which show that the commitment to provide such benefits is enforceable, that the plan or program is financially responsible, and that the plan or program has been communicated in writing to the laborers or mechanics affected, and records which show the costs anticipated or the actual cost incurred in providing such benefits. Contractors employing apprentices or trainees under approved programs shall maintain written evidence of the registration of apprenticeship programs and certification of trainee programs, the registration of the apprentices and trainees, and the ratios and wage rates prescribed in the applicable programs.

b. (1) The contractor shall submit weekly for each week in which any contract work is performed a copy of all payrolls to the contracting agency. The payrolls submitted shall set out accurately and completely all of the information required to be maintained under 29 CFR 5.5(a)(3)(i), except that full social security numbers and home addresses shall not be included on weekly transmittals. Instead the payrolls shall only need to include an individually identifying number for each employee (e.g. , the last four digits of the employee's social security number). The required weekly payroll information may be submitted in any form desired. Optional Form WH–347 is available for this purpose from the Wage and Hour Division Web site at http://www.dol.gov/esa/whd/forms/wh347instr.htm or its successor site. The prime contractor is responsible for the submission of copies of payrolls by all subcontractors. Contractors and subcontractors shall maintain the full social security number and current address of each covered worker, and shall provide them upon request to the contracting agency for transmission to the State DOT, the

FHWA or the Wage and Hour Division of the Department of Labor for purposes of an investigation or audit of compliance with prevailing wage requirements. It is not a violation of this section for a prime contractor to require a subcontractor to provide addresses and social security numbers to the prime contractor for its own records, without weekly submission to the contracting agency..

(2) Each payroll submitted shall be accompanied by a "Statement of Compliance," signed by the contractor or subcontractor or his or her agent who pays or supervises the payment of the persons employed under the contract and shall certify the following:

(i) That the payroll for the payroll period contains the information required to be provided under §5.5 (a)(3)(ii) of Regulations, 29 CFR part 5, the appropriate information is being maintained under §5.5 (a)(3)(i) of Regulations, 29 CFR part 5, and that such information is correct and complete;

(ii) That each laborer or mechanic (including each helper, apprentice, and trainee) employed on the contract during the payroll period has been paid the full weekly wages earned, without rebate, either directly or indirectly, and that no deductions have been made either directly or indirectly from the full wages earned, other than permissible deductions as set forth in Regulations, 29 CFR part 3;

(iii) That each laborer or mechanic has been paid not less than the applicable wage rates and fringe benefits or cash equivalents for the classification of work performed, as specified in the applicable wage determination incorporated into the contract.

(3) The weekly submission of a properly executed certification set forth on the reverse side of Optional Form WH–347 shall satisfy the requirement for submission of the "Statement of Compliance" required by paragraph 3.b.(2) of this section.

(4) The falsification of any of the above certifications may subject the contractor or subcontractor to civil or criminal prosecution under section 1001 of title 18 and section 231 of title 31 of the United States Code.

c. The contractor or subcontractor shall make the records required under paragraph 3.a. of this section available for inspection, copying, or transcription by authorized representatives of the contracting agency, the State DOT, the FHWA, or the Department of Labor, and shall permit such representatives to interview employees during working hours on the job. If the contractor or subcontractor fails to submit the required records or to make them available, the FHWA may, after written notice to the contractor, the contracting agency or the State DOT, take such action as may be necessary to cause the suspension of any further payment, advance, or guarantee of funds. Furthermore, failure to submit the required records upon request or to make such records available may be grounds for debarment action pursuant to 29 CFR 5.12.

4. Apprentices and trainees

a. Apprentices (programs of the USDOL).

Apprentices will be permitted to work at less than the predetermined rate for the work they performed when they are employed pursuant to and individually registered in a bona fide apprenticeship program registered with the U.S. Department of Labor, Employment and Training Administration, Office of Apprenticeship Training, Employer and Labor Services, or with a State Apprenticeship Agency recognized by the Office, or if a person is employed in his or her first 90 days of probationary employment as an apprentice in such an apprenticeship program, who is not individually registered in the program, but who has been certified by the Office of Apprenticeship Training, Employer and Labor Services or a State Apprenticeship Agency (where appropriate) to be eligible for probationary employment as an apprentice.

The allowable ratio of apprentices to journeymen on the job site in any craft classification shall not be greater than the ratio permitted to the contractor as to the entire work force under the registered program. Any worker listed on a payroll at an apprentice wage rate, who is not registered or otherwise employed as stated above, shall be paid not less than the applicable wage rate on the wage determination for the classification of work actually performed. In addition, any apprentice performing work on the job site in excess of the ratio permitted under the registered program shall be paid not less than the applicable wage rate on the wage determination for the work actually performed. Where a contractor is performing construction on a project in a locality other than that in which its program is registered, the ratios and wage rates (expressed in percentages of the journeyman's hourly rate) specified in the contractor's or subcontractor's registered program shall be observed.

Every apprentice must be paid at not less than the rate specified in the registered program for the apprentice's level of progress, expressed as a percentage of the journeymen hourly rate specified in the applicable wage determination. Apprentices shall be paid fringe benefits in accordance with the provisions of the apprenticeship program. If the apprenticeship program does not specify fringe benefits, apprentices must be paid the full amount of fringe benefits listed on the wage determination for the applicable classification. If the Administrator determines that a different practice prevails for the applicable apprentice classification, fringes shall be paid in accordance with that determination. In the event the Office of Apprenticeship Training, Employer and Labor Services, or a State Apprenticeship Agency recognized by the Office, withdraws approval of an apprenticeship program, the contractor will no longer be permitted to utilize apprentices at less than the applicable predetermined rate for the work performed until an acceptable program is approved.

b. Trainees (programs of the USDOL).

Except as provided in 29 CFR 5.16, trainees will not be permitted to work at less than the predetermined rate for the work performed unless they are employed pursuant to and individually registered in a program which has received prior approval, evidenced by formal certification by the U.S. Department of Labor, Employment and Training Administration.

The ratio of trainees to journeymen on the job site shall not be greater than permitted under the plan approved by the Employment and Training Administration.

Every trainee must be paid at not less than the rate specified in the approved program for the trainee's level of progress, expressed as a percentage of the journeyman hourly rate specified in the applicable wage determination. Trainees shall be paid fringe benefits in accordance with the

provisions of the trainee program. If the trainee program does not mention fringe benefits, trainees shall be paid the full amount of fringe benefits listed on the wage determination unless the Administrator of the Wage and Hour Division determines that there is an apprenticeship program associated with the corresponding journeyman wage rate on the wage determination which provides for less than full fringe benefits for apprentices. Any employee listed on the payroll at a trainee rate who is not registered and participating in a training plan approved by the Employment and Training Administration shall be paid not less than the applicable wage rate on the wage determination for the classification of work actually performed. In addition, any trainee performing work on the job site in excess of the ratio permitted under the registered program shall be paid not less than the applicable wage rate on the wage determination for the work actually performed.

In the event the Employment and Training Administration withdraws approval of a training program, the contractor will no longer be permitted to utilize trainees at less than the applicable predetermined rate for the work performed until an acceptable program is approved.

c. Equal employment opportunity. The utilization of apprentices, trainees and journeymen under this part shall be in conformity with the equal employment opportunity requirements of Executive Order 11246, as amended, and 29 CFR part 30.

d. Apprentices and Trainees (programs of the U.S. DOT). Apprentices and trainees working under apprenticeship and skill training programs which have been certified by the Secretary of Transportation as promoting EEO in connection with Federal-aid highway construction programs are not subject to the requirements of paragraph 4 of this Section IV. The straight time hourly wage rates for apprentices and trainees under such programs will be established by the particular programs. The ratio of apprentices and trainees to journeymen shall not be greater than permitted by the terms of the particular program.

5. Compliance with Copeland Act requirements. The contractor shall comply with the requirements of 29 CFR part 3, which are incorporated by reference in this contract.

6. Subcontracts. The contractor or subcontractor shall insert Form FHWA-1273 in any subcontracts and also require the subcontractors to include Form FHWA-1273 in any lower tier subcontracts. The prime contractor shall be responsible for the compliance by any subcontractor or lower tier subcontractor with all the contract clauses in 29 CFR 5.5.

7. Contract termination: debarment. A breach of the contract clauses in 29 CFR 5.5 may be grounds for termination of the contract, and for debarment as a contractor and a subcontractor as provided in 29 CFR 5.12.

8. Compliance with Davis-Bacon and Related Act requirements. All rulings and interpretations of the Davis-Bacon and Related Acts contained in 29 CFR parts 1, 3, and 5 are herein incorporated by reference in this contract.

9. Disputes concerning labor standards. Disputes arising out of the labor standards provisions of this contract shall not be subject to the general disputes clause of this contract. Such disputes shall be resolved in accordance with the procedures of the Department of Labor set forth in 29 CFR parts 5, 6, and 7. Disputes within the meaning of this clause include disputes between the contractor (or any of its subcontractors) and the contracting agency, the U.S. Department of Labor, or the employees or their representatives.

10. Certification of eligibility.

a. By entering into this contract, the contractor certifies that neither it (nor he or she) nor any person or firm who has an interest in the contractor's firm is a person or firm ineligible to be awarded Government contracts by virtue of section 3(a) of the Davis-Bacon Act or 29 CFR 5.12(a)(1).

b. No part of this contract shall be subcontracted to any person or firm ineligible for award of a Government contract by virtue of section 3(a) of the Davis-Bacon Act or 29 CFR 5.12(a)(1).

c. The penalty for making false statements is prescribed in the U.S. Criminal Code, 18 U.S.C. 1001.

V. CONTRACT WORK HOURS AND SAFETY STANDARDS ACT

The following clauses apply to any Federal-aid construction contract in an amount in excess of $100,000 and subject to the overtime provisions of the Contract Work Hours and Safety Standards Act. These clauses shall be inserted in addition to the clauses required by 29 CFR 5.5(a) or 29 CFR 4.6. As used in this paragraph, the terms laborers and mechanics include watchmen and guards.

1. Overtime requirements. No contractor or subcontractor contracting for any part of the contract work which may require or involve the employment of laborers or mechanics shall require or permit any such laborer or mechanic in any workweek in which he or she is employed on such work to work in excess of forty hours in such workweek unless such laborer or mechanic receives compensation at a rate not less than one and one-half times the basic rate of pay for all hours worked in excess of forty hours in such workweek.

2. Violation; liability for unpaid wages; liquidated damages. In the event of any violation of the clause set forth in paragraph (1.) of this section, the contractor and any subcontractor responsible therefor shall be liable for the unpaid wages. In addition, such contractor and subcontractor shall be liable to the United States (in the case of work done under contract for the District of Columbia or a territory, to such District or to such territory), for liquidated damages. Such liquidated damages shall be computed with respect to each individual laborer or mechanic, including watchmen and guards, employed in violation of the clause set forth in paragraph (1.) of this section, in the sum of $10 for each calendar day on which such individual was required or permitted to work in excess of the standard workweek of forty hours without payment of the overtime wages required by the clause set forth in paragraph (1.) of this section.

3. Withholding for unpaid wages and liquidated damages. The FHWA or the contacting agency shall upon its own action or upon written request of an authorized representative of the Department of Labor withhold or cause to be withheld, from any moneys payable on account of work

performed by the contractor or subcontractor under any such contract or any other Federal contract with the same prime contractor, or any other federally-assisted contract subject to the Contract Work Hours and Safety Standards Act, which is held by the same prime contractor, such sums as may be determined to be necessary to satisfy any liabilities of such contractor or subcontractor for unpaid wages and liquidated damages as provided in the clause set forth in paragraph (2.) of this section.

4. Subcontracts. The contractor or subcontractor shall insert in any subcontracts the clauses set forth in paragraph (1.) through (4.) of this section and also a clause requiring the subcontractors to include these clauses in any lower tier subcontracts. The prime contractor shall be responsible for compliance by any subcontractor or lower tier subcontractor with the clauses set forth in paragraphs (1.) through (4.) of this section.

VI. SUBLETTING OR ASSIGNING THE CONTRACT

This provision is applicable to all Federal-aid construction contracts on the National Highway System.

1. The contractor shall perform with its own organization contract work amounting to not less than 30 percent (or a greater percentage if specified elsewhere in the contract) of the total original contract price, excluding any specialty items designated by the contracting agency. Specialty items may be performed by subcontract and the amount of any such specialty items performed may be deducted from the total original contract price before computing the amount of work required to be performed by the contractor's own organization (23 CFR 635.116).

a. The term “perform work with its own organization” refers to workers employed or leased by the prime contractor, and equipment owned or rented by the prime contractor, with or without operators. Such term does not include employees or equipment of a subcontractor or lower tier subcontractor, agents of the prime contractor, or any other assignees. The term may include payments for the costs of hiring leased employees from an employee leasing firm meeting all relevant Federal and State regulatory requirements. Leased employees may only be included in this term if the prime contractor meets all of the following conditions:

(1) the prime contractor maintains control over the supervision of the day-to-day activities of the leased employees;
(2) the prime contractor remains responsible for the quality of the work of the leased employees;
(3) the prime contractor retains all power to accept or exclude individual employees from work on the project; and
(4) the prime contractor remains ultimately responsible for the payment of predetermined minimum wages, the submission of payrolls, statements of compliance and all other Federal regulatory requirements.

b. "Specialty Items" shall be construed to be limited to work that requires highly specialized knowledge, abilities, or equipment not ordinarily available in the type of contracting organizations qualified and expected to bid or propose on the contract as a whole and in general are to be limited to minor components of the overall contract.

2. The contract amount upon which the requirements set forth in paragraph (1) of Section VI is computed includes the cost of material and manufactured products which are to be purchased or produced by the contractor under the contract provisions.

3. The contractor shall furnish (a) a competent superintendent or supervisor who is employed by the firm, has full authority to direct performance of the work in accordance with the contract requirements, and is in charge of all construction operations (regardless of who performs the work) and (b) such other of its own organizational resources (supervision, management, and engineering services) as the contracting officer determines is necessary to assure the performance of the contract.

4. No portion of the contract shall be sublet, assigned or otherwise disposed of except with the written consent of the contracting officer, or authorized representative, and such consent when given shall not be construed to relieve the contractor of any responsibility for the fulfillment of the contract. Written consent will be given only after the contracting agency has assured that each subcontract is evidenced in writing and that it contains all pertinent provisions and requirements of the prime contract.

5. The 30% self-performance requirement of paragraph (1) is not applicable to design-build contracts; however, contracting agencies may establish their own self-performance requirements.

VII. SAFETY: ACCIDENT PREVENTION

This provision is applicable to all Federal-aid construction contracts and to all related subcontracts.

1. In the performance of this contract the contractor shall comply with all applicable Federal, State, and local laws governing safety, health, and sanitation (23 CFR 635). The contractor shall provide all safeguards, safety devices and protective equipment and take any other needed actions as it determines, or as the contracting officer may determine, to be reasonably necessary to protect the life and health of employees on the job and the safety of the public and to protect property in connection with the performance of the work covered by the contract.

2. It is a condition of this contract, and shall be made a condition of each subcontract, which the contractor enters into pursuant to this contract, that the contractor and any subcontractor shall not permit any employee, in performance of the contract, to work in surroundings or under conditions which are unsanitary, hazardous or dangerous to his/her health or safety, as determined under construction safety and health standards (29 CFR 1926) promulgated by the Secretary of Labor, in accordance with Section 107 of the Contract Work Hours and Safety Standards Act (40 U.S.C. 3704).

3. Pursuant to 29 CFR 1926.3, it is a condition of this contract that the Secretary of Labor or authorized representative thereof, shall have right of entry to any site of contract performance to inspect or investigate the matter of compliance with the construction safety and health standards

and to carry out the duties of the Secretary under Section 107 of the Contract Work Hours and Safety Standards Act (40 U.S.C.3704).

VIII. FALSE STATEMENTS CONCERNING HIGHWAY PROJECTS

This provision is applicable to all Federal-aid construction contracts and to all related subcontracts.

In order to assure high quality and durable construction in conformity with approved plans and specifications and a high degree of reliability on statements and representations made by engineers, contractors, suppliers, and workers on Federal-aid highway projects, it is essential that all persons concerned with the project perform their functions as carefully, thoroughly, and honestly as possible. Willful falsification, distortion, or misrepresentation with respect to any facts related to the project is a violation of Federal law. To prevent any misunderstanding regarding the seriousness of these and similar acts, Form FHWA-1022 shall be posted on each Federal-aid highway project (23 CFR 635) in one or more places where it is readily available to all persons concerned with the project:

18 U.S.C. 1020 reads as follows:

"Whoever, being an officer, agent, or employee of the United States, or of any State or Territory, or whoever, whether a person, association, firm, or corporation, knowingly makes any false statement, false representation, or false report as to the character, quality, quantity, or cost of the material used or to be used, or the quantity or quality of the work performed or to be performed, or the cost thereof in connection with the submission of plans, maps, specifications, contracts, or costs of construction on any highway or related project submitted for approval to the Secretary of Transportation; or

Whoever knowingly makes any false statement, false representation, false report or false claim with respect to the character, quality, quantity, or cost of any work performed or to be performed, or materials furnished or to be furnished, in connection with the construction of any highway or related project approved by the Secretary of Transportation; or

Whoever knowingly makes any false statement or false representation as to material fact in any statement, certificate, or report submitted pursuant to provisions of the Federal-aid Roads Act approved July 1, 1916, (39 Stat. 355), as amended and supplemented;

Shall be fined under this title or imprisoned not more than 5 years or both."

IX. IMPLEMENTATION OF CLEAN AIR ACT AND FEDERAL WATER POLLUTION CONTROL ACT

This provision is applicable to all Federal-aid construction contracts and to all related subcontracts.

By submission of this bid/proposal or the execution of this contract, or subcontract, as appropriate, the bidder, proposer, Federal-aid construction contractor, or subcontractor, as appropriate, will be deemed to have stipulated as follows:

1. That any person who is or will be utilized in the performance of this contract is not prohibited from receiving an award due to a violation of Section 508 of the Clean Water Act or Section 306 of the Clean Air Act.
2. That the contractor agrees to include or cause to be included the requirements of paragraph (1) of this Section X in every subcontract, and further agrees to take such action as the contracting agency may direct as a means of enforcing such requirements.

X. CERTIFICATION REGARDING DEBARMENT, SUSPENSION, INELIGIBILITY AND VOLUNTARY EXCLUSION

This provision is applicable to all Federal-aid construction contracts, design-build contracts, subcontracts, lower-tier subcontracts, purchase orders, lease agreements, consultant contracts or any other covered transaction requiring FHWA approval or that is estimated to cost $25,000 or more – as defined in 2 CFR Parts 180 and 1200.

1. Instructions for Certification – First Tier Participants:

a. By signing and submitting this proposal, the prospective first tier participant is providing the certification set out below.

b. The inability of a person to provide the certification set out below will not necessarily result in denial of participation in this covered transaction. The prospective first tier participant shall submit an explanation of why it cannot provide the certification set out below. The certification or explanation will be considered in connection with the department or agency's determination whether to enter into this transaction. However, failure of the prospective first tier participant to furnish a certification or an explanation shall disqualify such a person from participation in this transaction.

c. The certification in this clause is a material representation of fact upon which reliance was placed when the contracting agency determined to enter into this transaction. If it is later determined that the prospective participant knowingly rendered an erroneous certification, in addition to other remedies available to the Federal Government, the contracting agency may terminate this transaction for cause of default.

d. The prospective first tier participant shall provide immediate written notice to the contracting agency to whom this proposal is submitted if any time the prospective first tier participant learns that its certification was erroneous when submitted or has become erroneous by reason of changed circumstances.

e. The terms "covered transaction," "debarred," "suspended," "ineligible," "participant," "person," "principal," and "voluntarily excluded," as used in this clause, are defined in 2 CFR Parts 180 and 1200. “First Tier Covered Transactions” refers to any covered transaction between a grantee or subgrantee of Federal funds and a participant (such as the prime or general contract). “Lower Tier Covered Transactions” refers to any covered transaction

under a First Tier Covered Transaction (such as subcontracts). "First Tier Participant" refers to the participant who has entered into a covered transaction with a grantee or subgrantee of Federal funds (such as the prime or general contractor). "Lower Tier Participant" refers any participant who has entered into a covered transaction with a First Tier Participant or other Lower Tier Participants (such as subcontractors and suppliers).

f. The prospective first tier participant agrees by submitting this proposal that, should the proposed covered transaction be entered into, it shall not knowingly enter into any lower tier covered transaction with a person who is debarred, suspended, declared ineligible, or voluntarily excluded from participation in this covered transaction, unless authorized by the department or agency entering into this transaction.

g. The prospective first tier participant further agrees by submitting this proposal that it will include the clause titled "Certification Regarding Debarment, Suspension, Ineligibility and Voluntary Exclusion-Lower Tier Covered Transactions," provided by the department or contracting agency, entering into this covered transaction, without modification, in all lower tier covered transactions and in all solicitations for lower tier covered transactions exceeding the $25,000 threshold.

h. A participant in a covered transaction may rely upon a certification of a prospective participant in a lower tier covered transaction that is not debarred, suspended, ineligible, or voluntarily excluded from the covered transaction, unless it knows that the certification is erroneous. A participant is responsible for ensuring that its principals are not suspended, debarred, or otherwise ineligible to participate in covered transactions. To verify the eligibility of its principals, as well as the eligibility of any lower tier prospective participants, each participant may, but is not required to, check the Excluded Parties List System website (https://www.epls.gov/), which is compiled by the General Services Administration.

i. Nothing contained in the foregoing shall be construed to require the establishment of a system of records in order to render in good faith the certification required by this clause. The knowledge and information of the prospective participant is not required to exceed that which is normally possessed by a prudent person in the ordinary course of business dealings.

j. Except for transactions authorized under paragraph (f) of these instructions, if a participant in a covered transaction knowingly enters into a lower tier covered transaction with a person who is suspended, debarred, ineligible, or voluntarily excluded from participation in this transaction, in addition to other remedies available to the Federal Government, the department or agency may terminate this transaction for cause or default.

* * * * *

2. Certification Regarding Debarment, Suspension, Ineligibility and Voluntary Exclusion – First Tier Participants:

a. The prospective first tier participant certifies to the best of its knowledge and belief, that it and its principals:

(1) Are not presently debarred, suspended, proposed for debarment, declared ineligible, or voluntarily excluded from participating in covered transactions by any Federal department or agency;

(2) Have not within a three-year period preceding this proposal been convicted of or had a civil judgment rendered against them for commission of fraud or a criminal offense in connection with obtaining, attempting to obtain, or performing a public (Federal, State or local) transaction or contract under a public transaction; violation of Federal or State antitrust statutes or commission of embezzlement, theft, forgery, bribery, falsification or destruction of records, making false statements, or receiving stolen property;

(3) Are not presently indicted for or otherwise criminally or civilly charged by a governmental entity (Federal, State or local) with commission of any of the offenses enumerated in paragraph (a)(2) of this certification; and

(4) Have not within a three-year period preceding this application/proposal had one or more public transactions (Federal, State or local) terminated for cause or default.

b. Where the prospective participant is unable to certify to any of the statements in this certification, such prospective participant shall attach an explanation to this proposal.

2. Instructions for Certification - Lower Tier Participants:

(Applicable to all subcontracts, purchase orders and other lower tier transactions requiring prior FHWA approval or estimated to cost $25,000 or more - 2 CFR Parts 180 and 1200)

a. By signing and submitting this proposal, the prospective lower tier is providing the certification set out below.

b. The certification in this clause is a material representation of fact upon which reliance was placed when this transaction was entered into. If it is later determined that the prospective lower tier participant knowingly rendered an erroneous certification, in addition to other remedies available to the Federal Government, the department, or agency with which this transaction originated may pursue available remedies, including suspension and/or debarment.

c. The prospective lower tier participant shall provide immediate written notice to the person to which this proposal is submitted if at any time the prospective lower tier participant learns that its certification was erroneous by reason of changed circumstances.

d. The terms "covered transaction," "debarred," "suspended," "ineligible," "participant," "person," "principal," and "voluntarily excluded," as used in this clause, are defined in 2 CFR Parts 180 and 1200. You may contact the person to which this proposal is submitted for assistance in obtaining a copy of those regulations. "First Tier Covered Transactions" refers to any covered transaction between a grantee or subgrantee of Federal funds and a participant (such as the prime or general contract). "Lower Tier Covered Transactions" refers to any covered transaction under a First Tier Covered Transaction (such as

subcontracts). "First Tier Participant" refers to the participant who has entered into a covered transaction with a grantee or subgrantee of Federal funds (such as the prime or general contractor). "Lower Tier Participant" refers any participant who has entered into a covered transaction with a First Tier Participant or other Lower Tier Participants (such as subcontractors and suppliers).

e. The prospective lower tier participant agrees by submitting this proposal that, should the proposed covered transaction be entered into, it shall not knowingly enter into any lower tier covered transaction with a person who is debarred, suspended, declared ineligible, or voluntarily excluded from participation in this covered transaction, unless authorized by the department or agency with which this transaction originated.

f. The prospective lower tier participant further agrees by submitting this proposal that it will include this clause titled "Certification Regarding Debarment, Suspension, Ineligibility and Voluntary Exclusion-Lower Tier Covered Transaction," without modification, in all lower tier covered transactions and in all solicitations for lower tier covered transactions exceeding the $25,000 threshold.

g. A participant in a covered transaction may rely upon a certification of a prospective participant in a lower tier covered transaction that is not debarred, suspended, ineligible, or voluntarily excluded from the covered transaction, unless it knows that the certification is erroneous. A participant is responsible for ensuring that its principals are not suspended, debarred, or otherwise ineligible to participate in covered transactions. To verify the eligibility of its principals, as well as the eligibility of any lower tier prospective participants, each participant may, but is not required to, check the Excluded Parties List System website (https://www.epls.gov/), which is compiled by the General Services Administration.

h. Nothing contained in the foregoing shall be construed to require establishment of a system of records in order to render in good faith the certification required by this clause. The knowledge and information of participant is not required to exceed that which is normally possessed by a prudent person in the ordinary course of business dealings.

i. Except for transactions authorized under paragraph e of these instructions, if a participant in a covered transaction knowingly enters into a lower tier covered transaction with a person who is suspended, debarred, ineligible, or voluntarily excluded from participation in this transaction, in addition to other remedies available to the Federal Government, the department or agency with which this transaction originated may pursue available remedies, including suspension and/or debarment.

* * * * *

Certification Regarding Debarment, Suspension, Ineligibility and Voluntary Exclusion--Lower Tier Participants:

1. The prospective lower tier participant certifies, by submission of this proposal, that neither it nor its principals is presently debarred, suspended, proposed for debarment, declared ineligible, or voluntarily excluded from participating in covered transactions by any Federal department or agency.

2. Where the prospective lower tier participant is unable to certify to any of the statements in this certification, such prospective participant shall attach an explanation to this proposal.

* * * * *

XI. CERTIFICATION REGARDING USE OF CONTRACT FUNDS FOR LOBBYING

This provision is applicable to all Federal-aid construction contracts and to all related subcontracts which exceed $100,000 (49 CFR 20).

1. The prospective participant certifies, by signing and submitting this bid or proposal, to the best of his or her knowledge and belief, that:

a. No Federal appropriated funds have been paid or will be paid, by or on behalf of the undersigned, to any person for influencing or attempting to influence an officer or employee of any Federal agency, a Member of Congress, an officer or employee of Congress, or an employee of a Member of Congress in connection with the awarding of any Federal contract, the making of any Federal grant, the making of any Federal loan, the entering into of any cooperative agreement, and the extension, continuation, renewal, amendment, or modification of any Federal contract, grant, loan, or cooperative agreement.

b. If any funds other than Federal appropriated funds have been paid or will be paid to any person for influencing or attempting to influence an officer or employee of any Federal agency, a Member of Congress, an officer or employee of Congress, or an employee of a Member of Congress in connection with this Federal contract, grant, loan, or cooperative agreement, the undersigned shall complete and submit Standard Form-LLL, "Disclosure Form to Report Lobbying," in accordance with its instructions.

2. This certification is a material representation of fact upon which reliance was placed when this transaction was made or entered into. Submission of this certification is a prerequisite for making or entering into this transaction imposed by 31 U.S.C. 1352. Any person who fails to file the required certification shall be subject to a civil penalty of not less than $10,000 and not more than $100,000 for each such failure.

3. The prospective participant also agrees by submitting its bid or proposal that the participant shall require that the language of this certification be included in all lower tier subcontracts, which exceed $100,000 and that all such recipients shall certify and disclose accordingly.

BOOK 2
INSTRUCTION AND EXECUTION DOCUMENTS

PROJECT TITLE: IRVING PARK ROAD BRIDGE OVER NORTH BRANCH CHICAGO RIVER

C.D.O.T. PROJECT NO.: **E-5-038**
SPECIFICATION NO.: **425139**
F.A. PROJECT NO.: **PHGK (424)**
STATE JOB NO.: **C-88-046-06**
SECTION NO.: **05-E5038-00-BR**

CITY OF CHICAGO
RAHM EMANUEL
MAYOR

REBEKAH SCHEINFELD
Commissioner
Department of Transportation
Suite 1100, 30 North LaSalle Street
Chicago, Illinois 60602-2570

DANIEL BURKE, P.E., S.E.
Deputy Commissioner
Division of Engineering

Issued by
DEPARTMENT OF PROCUREMENT SERVICES

JAMIE L. RHEE
Chief Procurement Officer

Document Printed, January 2018

All Signatures To Be Sworn To Before A Notary Public

Any contract entered into as a result of this bid process is governed by the terms and conditions set forth in Book 1 "Terms and Conditions for Construction" for CDOT Federally Funded – FHWA projects, dated August 2017, as amended and incorporated as if fully set forth here by this reference; and by Book 2, Book 3 (if applicable), plans, drawings, exhibits, and attachments as appropriate.

Printed copies of Book 1 are available at the City of Chicago, Department of Procurement Services, 121 North LaSalle Street, Room 103, Chicago, Illinois 60602. Book 1 is also available on the City's web site at http://www.cityofchicago.org/city/en/depts/dps/provdrs/contract/svcs/forms_and_standardagreements.html.

BOOK 2 – INSTRUCTIONS AND EXECUTION DOCUMENTS

ADVERTISEMENT FOR BIDS

ATTACH
LEGAL
ADVERTISEMENT
HERE

BOOK 2 - INSTRUCTIONS AND EXECUTION DOCUMENTS
Table of Contents

DOCUMENT SUBMITTAL CHECKLIST II

SECTION ONE 1

PROJECT INFORMATION 2
PROPOSAL PAGES 9
SCHEDULE OF PRICES 14

SECTION TWO 35

REQUIREMENTS FOR BIDDING AND INSTRUCTIONS FOR BIDDERS 36
LICENSING OF GENERAL CONTRACTORS 45
LICENSING OF GENERAL CONTRACTORS 45
PROPOSAL TO BE EXECUTED BY A CORPORATION 57
PROPOSAL TO BE EXECUTED BY A JOINT VENTURE 58
PROPOSAL TO BE EXECUTED BY A PARTNERSHIP 60
PROPOSAL TO BE EXECUTED BY A SOLE PROPRIETOR 61
PROPOSAL ACCEPTANCE 62
AFFIDAVIT OF AVAILABILITY 63
SCHEDULE B: AFFIDAVIT OF DBE/NON-DBE JOINT VENTURE 66
SCHEDULE C: LETTER OF INTENT FROM DBE 71
SCHEDULE D: AFFIDAVIT OF PRIME CONTRACTOR 73
SCHEDULE F: REPORT OF SUBCONTRACTOR SOLICITATIONS 75
STATUS REPORT OF DBE CONTRACT PAYMENTS 76
INSTRUCTIONS FOR COMPLETING ECONOMIC DISCLOSURE STATEMENT AND AFFIDAVIT (EDS) ON-LINE 78
CITY OF CHICAGO ECONOMIC DISCLOSURE STATEMENT AND AFFIDAVIT 85
CONTRACTOR'S AFFIDAVIT REGARDING REMOVAL OF ALL WASTE MATERIALS AND IDENTIFICATION OF ALL LEGAL DUMP SITES 86
RIDER TO CONTRACTOR'S PERFORMANCE AND PAYMENT BOND 90

DOCUMENT SUBMITTAL CHECKLIST

This checklist is intended to assist you. Missing forms may invalidate your bid. Please ensure that you have completed the forms and indicate such by placing an "X" next to each completed item:

1. _____ Schedule of Prices

2. _____ Submit the Appropriate Proposal
   - ___ Proposal To Be Completed By a Joint Venture; or
   - ___ Proposal To Be Completed By a Corporation; or
   - ___ Proposal To Be Completed By a Partnership; or
   - ___ Proposal To Be Completed by a Sole Partnership

3. _____ Affidavit of Availability

4. _____ Contractor's Affidavit Regarding Removal of all Waste Materials and Identification of All Legal Dump Sites

5. _____ Schedule B – Affidavit of Joint Venture (if applicable)

6. _____ Schedule C – Letter of Intent from DBE

7. _____ Schedule D – Affidavit of Prime Contractor

8. _____ Schedule F – Report of Subcontractor Solicitations

9. _____ City of Chicago Economic Disclosure Statement Certificate of Filing

SECTION ONE

PROJECT INFORMATION

The following Specifications supplement the "Requirements for Bidding and Instructions for Bidders" in Section Two of this document.

Proposals will be received by the Chief Procurement Officer of the City of Chicago for:

IRVING PARK ROAD BRIDGE OVER NORTH BRANCH CHICAGO RIVER
C.D.O.T. PROJECT NO.: E-5-038

all in accordance with Contract Documents set forth below.

General Description of Work

The work for which proposals are invited consist of furnishing all labor, materials and equipment required for the reconstruction of the Irving Park Road Bridge (SN 016-6090) over the North Branch of the Chicago River. This includes but is not limited to the following activities:

- Removal and Reconstruction of Bridge No. 016-6090 carrying Irving Park Road over the North Branch of the Chicago River;
- Irving Park Road pavement resurfacing and shoulder widening;
- Proposed drainage modifications;
- Maintenance of traffic during construction;
- Proposed pavement markings;
- Temporary and permanent erosion control devices;
- Install Landscaping items;
- Construction of shared-use path including retaining walls;
- Lighting for Irving Park Road and shared-use path;
- Proposed water main and sewer modifications;
- and as described in the detail specifications, including all appurtenant work and accessories, to the complete satisfaction of, approval and acceptance by the City.

This description of work is intended to be general in nature and is neither a complete description nor a limitation on the work to be performed. Contractor shall perform all Work described in the Contract Documents or reasonably inferable as necessary to produce the results specified therein, except to the extent specifically indicated in the Contract Documents to be the responsibility of others.

Fund Source: Federal Highway Administration

Concurrence from the Illinois Department of Transportation ("IDOT") is required as a condition precedent to award of a contract for the Work described herein.

PROJECT INFORMATION

Contract DBE Participation Goal: 25% of Total Base Bid

Bid Deposit: 5% of Total Base Bid

Award of Contract

Proposals will be compared based on the **Total Base Bid**, correctly computed, and a contract, if awarded, will be awarded to the lowest responsible and responsive bidder, in the amount of the Total Base Bid.

The City reserves the right to check all calculations and to correct all extensions in case of error.

Inspection of Site

The bidder is expected to inspect the site of the Work. No allowance will be made for any difficulties that may be encountered in executing the Work due to a failure of the bidder to inspect the site. Site inspection shall be arranged through the Project Manager at the office of the Division of Engineering, 30 N. LaSalle Street, Suite 400, Chicago, IL. (Telephone 744-2012)

Government – Equal Employment Opportunity

The attention of bidders is directed to the Government Requirements for construction contracts included in Book 1, AFFIRMATIVE ACTION PLAN TO ENSURE EQUAL EMPLOYMENT OPPORTUNITY (Executive Order 11246), Notice of Affirmative Action to Ensure Equal Employment Opportunity, and the Standard Federal Equal Employment Opportunity construction Contract Specifications (Executive order 11246).

Document Deposit

$0.00 first set per bidder on CD ROM

$50.00 each subsequent set per bidder on CD ROM.

Pre Bid Conference

A pre bid conference will be held at the date, time and location indicated in the advertisement for bids. All interested parties are **strongly encouraged** to attend. The City may answer questions or clarify the terms of the bid documents at the conference. Written answers may be provided following the conference. Questions and requests for clarification may be submitted in writing, or may be raised at the conference; however, verbal questions or requests for clarification must be sent by email mail and directed to the attention of the Contract Administrator, Department of Procurement Services, Room 806 of the City Hall 121 N. LaSalle, Chicago, IL, 60602. The City will not accept any questions for the ten (10) day period preceding the bid opening date.

CONTRACT INSURANCE REQUIREMENTS

Department of Transportation
Irving Park Road Bridge Over North Branch Chicago River
CDOT Project Number: E-5-038

The Contractor must provide and maintain at Contractor's own expense, until Contract completion and during the time period following final completion if Contractor is required to return and perform any additional work, the insurance coverages and requirements specified below, insuring all operations related to the Contract.

A. INSURANCE TO BE PROVIDED

1) Workers Compensation and Employers Liability

Workers Compensation Insurance, as prescribed by applicable law covering all employees who are to provide work under this Contract and Employers Liability coverage with limits of not less than $ 1,000,000 each accident, illness or disease.

2) Commercial General Liability (Primary and Umbrella)

Commercial General Liability Insurance or equivalent with limits of not less than $5,000,000 per occurrence for bodily injury, personal injury, and property damage liability. Coverages must include the following: All premises and operations, products/completed operations (for a minimum of two (2) years following project completion), explosion, collapse, underground, separation of insureds, defense, and contractual liability (not to include Endorsement CG 21 39 or equivalent). The City of Chicago is to be named as an additional insured on a primary, non-contributory basis for any liability arising directly or indirectly from the work.

Subcontractors performing work for the Contractor must maintain limits of not less than $ 1,000,000 with the same terms herein.

3) Automobile Liability (Primary and Umbrella)

When any motor vehicles (owned, non-owned and hired) are used in connection with work to be performed, the Contractor must provide Automobile Liability Insurance with limits of not less than $ 2,000,000 per occurrence for bodily injury and property damage. The City of Chicago is to be named as an additional insured on a primary, non-contributory basis.

Subcontractors performing work for the Contractor must maintain limits of not less than $ 1,000,000 with the same terms herein.

4) Builders Risk

When Contractor undertakes any construction, including improvements, betterments, and/or repairs, the Contractor must provide All Risk Builders Risk Insurance at replacement cost for materials, supplies, equipment, machinery and fixtures that are or will be part of the project. Coverages must include but are not limited to the following: material stored off-site and in-transit, utility services, water including overflow, leakage, sewer backup, or seepage, landscaping, debris removal, faulty workmanship or materials, mechanical-electrical breakdown and testing. The City of Chicago is to be named as an additional insured and loss payee.

The Contractor is responsible for all loss or damage to City property at full replacement cost.

The Contractor is responsible for all loss or damage to personal property (including materials, equipment, tools and supplies) owned, rented or used by Contractor.

5) Owner's and Contractor's Protective Liability

With respect to the operations performed by Contractor, an Owner's and Contractor's Protective Liability policy designating the City of Chicago as named insured must be provided with limits of not less than $ 2,000,000 per occurrence, combined single limit, for losses arising out of bodily injuries to or death of all persons and for damage to or destruction of property.

6) Professional Liability

When any architects, engineers, construction managers or other professional consultants perform work in connection with this Contract, Professional Liability Insurance covering acts, errors, or omissions must be maintained with limits of not less than $ 1,000,000. Coverage must include pollution liability if environmental site assessments will be done. When policies are renewed or replaced, the policy retroactive date must coincide with, or precede, start of work on the Contract. A claims-made policy which is not renewed or replaced must have an extended reporting period of two (2) years.

7) Valuable Papers

When any plans, designs, drawings, specifications and documents are produced or used under this Contract, Valuable Papers Insurance must be maintained in an amount to insure against any loss whatsoever, and must have limits sufficient to pay for the re-creation and reconstruction of such records.

B. ADDITIONAL REQUIREMENTS

The Contractor must furnish the City of Chicago, Department of Procurement Services, City Hall, Room 806, 121 North LaSalle Street 60602, original Certificates of Insurance, or such similar evidence, to be in force on the date of this Contract, and Renewal Certificates of Insurance, or such similar evidence, if the coverages have an expiration or renewal date occurring during the term of this Contract. The Contractor must submit evidence of insurance on the City of Chicago Insurance Certificate Form (copy attached) or equivalent prior to Contract award. The receipt of any certificate does not constitute agreement by the City that the insurance requirements in the Contract have been fully met or that the insurance policies indicated on the certificate are in compliance with all Contract requirements. The failure of the City to obtain certificates or other insurance evidence from Contractor is not a waiver by the City of any requirements for the Contractor to obtain and maintain the specified coverages. The Contractor shall advise all insurers of the Contract provisions regarding insurance. Non-conforming insurance does not relieve Contractor of the obligation to provide insurance as specified herein. Nonfulfillment of the insurance conditions may constitute a violation of the Contract, and the City retains the right to stop work until proper evidence of insurance is provided, or the Contract may be terminated.

The Contractor must provide for 60 days prior written notice to be given to the City in the event coverage is substantially changed, canceled, or non-renewed.

Any deductibles or self insured retentions on referenced insurance coverages must be borne by Contractor.

The Contractor hereby waives and agrees to require their insurers to waive their rights of subrogation against the City of Chicago, its employees, elected officials, agents, or representatives.

The coverages and limits furnished by Contractor in no way limit the Contractor's liabilities and responsibilities specified within the Contract or by law.

Any insurance or self insurance programs maintained by the City of Chicago do not contribute with insurance provided by the Contractor under the Contract.

The required insurance to be carried is not limited by any limitations expressed in the indemnification language in this Contract or any limitation placed on the indemnity in this Contract given as a matter of law.

If Contractor is a joint venture or limited liability company, the insurance policies must name the joint venture or limited liability company as a named insured.

The Contractor must require all subcontractors to provide the insurance required herein**,** or Contractor may provide the coverages for subcontractors. All subcontractors are subject to the same insurance requirements of Contractor unless otherwise specified in this Contract.

If Contractor or subcontractor desires additional coverages, the party desiring the additional coverages is responsible for the acquisition and cost.

Notwithstanding any provision in the Agreement to the contrary**,** the City of Chicago Risk Management Department maintains the right to modify, delete, alter or change these requirements.

INSURANCE CERTIFICATE OF COVERAGE

Named Insured:_____ Specification #:_____
Address: _____ RFP: _____
_____ Project#: _____
(City) (State) (Zip) Contract#:_____

Description of Operation/Location	

The insurance policies and endorsements indicated below have been issued to the designated named insured with the policy limits as set forth herein covering the operation described within the contract involving the named insured and the City of Chicago. The Certificate issuer agrees that in the event of cancellation, non-renewal or material change involving the indicated policies, the issuer will provide at least sixty (60) days prior written notice of such change to the City of Chicago at the address shown on this Certificate. This certificate is issued to the City of Chicago in consideration of the contract entered into with the named insured, and it is mutually understood that the City of Chicago relies on this certificate as a basis for continuing such agreement with the named insured:

Type of Insurance	Insurer Name	Policy Number	Expiration Date	Limits of Liability All Limits in Thousands
General Liability [ ] Claims made [ ] Occurrence [ ] Premise-Operations [ ] Explosion/Collapse Underground [ ] Products/Co [ ] Blanket Con [ ] Broad Form [ ] Independent [ ] Personal Inj [ ] Pollution				CSL Per Occurrence $ _____ General _____ ed _____
Automobile Liability				CSL Per Occurrence $ _____
[ ] Excess Liability [ ] Umbrella Liability				Each Occurrence $ _____
Worker's Compensation and Employer's Liability				Statutory/Illinois Employers Liability $ _____
Builders Risk/Course of Construction				Amount of Contract
Professional Liability				$ _____
Owner Contractors Protective				$ _____
Other				$ _____

Specimen

a) Each Insurance policy required by this agreement, excepting policies for worker's compensation and professional liability, will read: "The City of Chicago is an additional insured as respects operations and activities of, or on behalf of the named insured, performed under contract with or permit from the City of Chicago."

b) The General, Automobile and Excess/Umbrella Liability Policies described provide for severability of Interest (cross liability) applicable to the named insured and the City.

c) Workers Compensation and Property Insurers shall waive all rights of subrogation against the City of Chicago.

d) The receipt of this certificate by the City does not constitute agreement by the City that the insurance requirements in the contract have been fully met, or that the insurance policies indicated by this certificate are in compliance with all contract requirements.

Name and Address of Certificate Holder and Recipient of Notice	
Certificate Holder/Additional Insured City of Chicago Department of Procurement Services 121 N. LaSalle St., #806 Chicago, IL 60602	Signature of Authorized Rep.: _____ Agency/Company: _____ Address: _____ Telephone: _____

For City use only
Name of City Department requesting certificate: (Using Dept.) _____
Address: _____ ZIP Code: _____
Attention: _____

PROPOSAL PAGES

PROPOSAL

The undersigned proposes to construct the

IRVING PARK ROAD OVER NORTH BRANCH CHICAGO RIVER
C.D.O.T. PROJECT NO. E-5-038

as required by this Contract, to perform all Work required, and to provide and furnish the required performance and payment bond and all of the labor, materials tools, equipment (expendable and otherwise), accessories and transportation services necessary to perform and complete the Work required, in a workmanlike manner and within the specified time, all in accordance with the Contract Documents, at the unit and lump sum prices set forth in the Schedule of Prices.

In connection with this proposal, the Bidder represents and warrants:

- Bidder will furnish a performance and payment bond in the required form and with sureties satisfactory to the City of Chicago within 7 calendar days after Bidder receives written notice that the City has accepted its proposal;

- Bidder has carefully examined the Contract Documents, Addenda (if any), and Exhibits on file at the Department of Transportation; inspected in detail the site of the proposed Work; familiarized itself with all of the conditions affecting the Contract, the Work to be done, and the conditions under which it must be carried out; and understands that in making its proposal it waives all rights to plead any misunderstanding regarding these matters;

- Bidder has completed and signed the "Economic Disclosure Statement" form and all other forms requiring Bidder's authorized signature;

- Bidder is ready, willing and able to undertake the Project and is prepared to and will provide documentation as outlined in Article 6 of the Requirements for Bidding and Instructions to Bidders entitled "Competency of the Bidder" to the satisfaction of the Chief Procurement Officer in his sole judgment, relating to Bidder's experience and performance ability and possession of necessary facilities, financial resources, and insurance, all for such a Project;

- Bidder or any of its officers is not barred from contracting with any unit of state or local government as a result of violations of law prohibiting bid-rigging or bid-rotating;

- Bidder understands that Bidder's Schedule of Prices must show the unit or lump sum price, as the case may be, for which Bidder proposes to perform each item of Work; that all extensions and the summation for the Total Base Bid must be made by Bidder, and that if not so made, Bidder's proposal may be rejected as irregular; and

- Bidder's price stated for each item of Work is based on the projected cost of that item at the time the Work is performed and includes a proportionate amount of the total cost for full compliance with the Contract Documents and with all applicable laws, ordinances, regulations, and codes of federal, state, and local governments having jurisdiction, and constitutes compensation in full for performing and completing the Work pertaining to that item, free of all claims and charges whatsoever.

NOTE: THE BIDDER SHOULD NOT ADD ANY CONDITIONS OR QUALIFYING STATEMENTS TO HIS PROPOSAL, AS SUCH ADDITIONS MAY CAUSE THE PROPOSAL TO BE DECLARED INFORMAL AND NOT RESPONSIVE TO THE REQUEST FOR BIDS.

TIME OF COMPLETION

It is understood and agreed that TIME IS OF THE ESSENCE IN THIS CONTRACT, and the Contractor agrees to begin actual work covered by this Contract after notification by the Commissioner to commence work and to prosecute the same with all due diligence so as to complete the entire work under the Contract within 520 calendar days after the date for commencement of work. It is understood that "Completion" will mean completion to the point of acceptance by the Commissioner, i.e. substantial completion/beneficial occupancy.

Milestone 1A: Critical Path Method Schedule (CPM)(including submittal dates for shop drawings and other submittals required) and Traffic Control Plan shall be submitted within 14 Calendar Days after Notice to Proceed;

Milestone 1B: Submit revised CPM schedule within 7 Calendar Days addressing comments from Milestone 1A submittal. This milestone is inclusive of all subsequent CPM submittals until approved. No Payments will be processed until a CPM schedule is approved.

Milestone 2: The Contractor shall have completed all roadway and bridge work, shoulder work, multi-use path work, trees and shrubs, installation of signing and establishment of the traffic lanes to the final proposed traffic lane configuration such that permanent lane closures are no longer required for the performance of this Contract for Project No. E-5-038 within 520 calendar days of Notice to Proceed.

The Contractor may prosecute the work through two shifts each working day if he deems such action necessary in order to complete the work within the specified time period. However, no work will be permitted between the hours of 9:00 p.m. and 8:00 a.m. Any variation from these restricted working hours to include extended shift hours and daytime work, if any, can only be permitted with the written approval of the Commissioner.

In the event that progress falls behind the approved schedule, work must proceed on a twenty-four (24) hour per day basis without additional compensation, if so ordered by the Commissioner, to comply with the requirements of this Section.

PUNCH LIST TIME OF COMPLETION

It is also understood and agreed that TIME IS OF THE ESSENCE IN CLOSING OUT THE JOB SITE WORK OF THIS CONTRACT, and the Contractor agrees to begin work immediately after receipt of formal comprehensive list of minor miscellaneous or finishing work also known as "Punch List" work.

Further, upon physical completion of the Work and final inspection of same, a final "Punch List" will be transmitted to the Contractor from the Commissioner. This final "Punch List" will consist of not only physical work items requiring corrective action, but will also include all applicable Contractor submittals as may be required by the Contract. It is understood and agreed that **all** final "Punch List" work will be prosecuted expeditiously and completed, in total, within thirty (30) calendar days of the date of the transmittal to the Contractor. Failure to complete **all** final "Punch List" items within the thirty (30) calendar day time limit shall be construed as failure to prosecute work of the contract and, as such, will subject the Contractor to the assessment of project liquidated damages in the amount(s) specified under the "Liquidated Damages" section of this proposal. These damages will be assessed continuously from the time of the expiration of the thirty (30) calendar day time limit until such time as **all** final "Punch List" items are completed to the satisfaction of the Commissioner.

LIQUIDATED DAMAGES

Failure of the Contractor to complete the Work under this Contract within the specified completion time will result in the incurrence by the City of additional construction and engineering costs, including but not limited to supervision and inspection, together with other tangible and intangible losses. Therefore, if any work will remain uncompleted after the time specified for the completion of the work or after any authorized extension of such stipulated time, the Contractor must pay to the City the sum listed below for each and every day that such work remains uncompleted, and such moneys must be paid as liquidated damages, not a penalty, to partially cover costs and losses by the City.

Completion of Milestone 1A/1B:	$1,000 per calendar day
Completion of Milestone 2:	$7,500 per calendar day
Completion of "Punch List" Work:	**$**1,000 per calendar day

The City will recover said liquidated damages by deducting the amount thereof out of any moneys due or that may become due, and if said moneys are insufficient to cover said damages, then the Contractor or the Surety must pay the amount due.

Nothing herein contained will be construed as limiting the right of the City to recover from the Contractor any and all amounts due or to become due, and any and all costs and expenses sustained by the City for improper performance hereunder, repudiation of the Contract by the Contractor, failure to perform or breach or breaches in any other respect, including but not limited to defective workmanship or materials.

The date for commencement of work will not be counted as a calendar day but each subsequent day thereafter from midnight to midnight will be counted as one calendar day and the last day

counted will be the day on which the Contractor must have completed and the Commissioner will have accepted the entire work under this Contract.

UNIT PRICES

In accordance with the provisions of Book 1, XIII.G.1.a, unit prices will be used to determine the amount to ADD TO or DEDUCT FROM contract price for properly authorized additional or omitted work. Unit prices must be inclusive of the cost of materials, work, layout, drafting, balancing and testing, tools and sundries, overhead and profit, supervision and any and all other costs of whatsoever nature in connection therewith for work in place and accepted or omitted as the case may be. The calculation for determining the number of units of work must be actual surface, volume, length, hours and number of individual items listed for the class of work complete in place and accepted or omitted. No allowance for waste, loss, breakage, damage or difficulties shall be made.

Unit Schedule of Prices for all applicable materials related to the Work under this Contract must be inserted in the spaces provided, in this proposal.

SCHEDULE OF PRICES

SCHEDULE OF PRICES
CDOT PROJECT NO. E-5-038/ Specification No. 425139
IRVING PARK ROAD OVER NORTH BRANCH CHICAGO RIVER

Bidder's pricing for each line item should carry its share of the costs of work, plus its share of overhead and profit. Bidders should avoid nominal pricing for some lines and enhanced pricing for other lines. Bids that the Chief Procurement Officer considers in his/her opinion to be materially unbalanced will be rejected.

ITEM NO.	CODE NO.	DESCRIPTION	UNIT	ESTIMATED TOTAL QUANTITY	UNIT PRICE	TOTAL PRICE
1	CDOT2010020	TREE PROTECTION	FOOT	1,300		
2	20100210	TREE REMOVAL (OVER 15 UNITS DIAMETER)	UNIT	131		
3	20100110	TREE REMOVAL (6 TO 15 UNITS DIAMETER)	UNIT	762		
4	20200100	EARTH EXCAVATION	CU YD	2,813		
5	20201200	REMOVAL AND DISPOSAL OF UNSUITABLE MATERIAL	CU YD	2,100		
6	20400800	FURNISHED EXCAVATION	CU YD	701		
7	21001000	GEOTECHNICAL FABRIC FOR GROUND STABILIZATION	SQ YD	1,264		
8	CDOT2110010	PULVERIZED TOPSOIL MIX	CU YD	11		
9	X2110100	TOPSOIL FURNISH AND PLACE, SPECIAL	CU YD	50		
10	X2111100	TOPSOIL EXCAVATION AND PLACEMENT , SPECIAL	CU YD	510		
11	20101400	NITROGEN FERTILIZER NUTRIENT	POUND	5		

SCHEDULE OF PRICES
CDOT PROJECT NO. E-5-038/ Specification No. 425139
IRVING PARK ROAD OVER NORTH BRANCH CHICAGO RIVER

Bidder's pricing for each line item should carry its share of the costs of work, plus its share of overhead and profit. Bidders should avoid nominal pricing for some lines and enhanced pricing for other lines. Bids that the Chief Procurement Officer considers in his/her opinion to be materially unbalanced will be rejected.

ITEM NO.	CODE NO.	DESCRIPTION	UNIT	ESTIMATED TOTAL QUANTITY	UNIT PRICE	TOTAL PRICE
12	20101600	POTASSIUM FERTILIZER NUTRIENT	POUND	5		
13	20101700	SUPPLEMENTAL WATERING	UNIT	1		
14	25200110	SODDING, SALT TOLERANT	SQ YD	69		
15	CDOT2530020	PARKWAY AND TREEPIT TREES	EACH	3		
16	28000200	EARTH EXCAVATION FOR EROSION CONTROL	CU YD	225		
17	28000250	TEMPORARY EROSION CONTROL SEEDING	POUND	79		
18	28000305	TEMPORARY DITCH CHECKS	FOOT	33		
19	28000400	PERIMETER EROSION BARRIER	FOOT	1,851		
20	28000510	INLET FILTERS	EACH	30		
21	28001000	AGGREGATE (EROSION CONTROL)	TON	3		
22	28001100	TEMPORARY EROSION CONTROL BLANKET	SQ YD	4,550		

SCHEDULE OF PRICES
CDOT PROJECT NO. E-5-038/ Specification No. 425139
IRVING PARK ROAD OVER NORTH BRANCH CHICAGO RIVER

Bidder's pricing for each line item should carry its share of the costs of work, plus its share of overhead and profit. Bidders should avoid nominal pricing for some lines and enhanced pricing for other lines. Bids that the Chief Procurement Officer considers in his/her opinion to be materially unbalanced will be rejected.

ITEM NO.	CODE NO.	DESCRIPTION	UNIT	ESTIMATED TOTAL QUANTITY	UNIT PRICE	TOTAL PRICE
23	28100109	STONE RIPRAP, CLASS A5	SQ YD	600		
24	28200200	FILTER FABRIC	SQ YD	683		
25	28500400	ARTICULATED BLOCK REVETMENT MAT	SQ YD	119		
26	30300112	AGGREGATE SUBGRADE IMPROVEMENT 12"	SQ YD	1,130		
27	CDOT3110020	STRUCTURAL SOIL	CU YD	12		
28	CDOT3110010	SAND CUSHION, VARIABLE DEPTH	CU YD	74		
29	35101800	AGGREGATE BASE COURSE, TYPE B 6"	SQ YD	1,264		
30	CDOT3530100	TEMPORARY PAVEMENT	SQ YD	475		
31	35300600	PORTLAND CEMENT CONCRETE BASE COURSE 11"	SQ YD	890		
32	40600290	BITUMINOUS MATERIALS (TACK COAT)	POUND	2,479		
33	40600535	LEVELING BINDER (HAND METHOD), N70	TON	35		

SCHEDULE OF PRICES
CDOT PROJECT NO. E-5-038/ Specification No. 425139
IRVING PARK ROAD OVER NORTH BRANCH CHICAGO RIVER

Bidder's pricing for each line item should carry its share of the costs of work, plus its share of overhead and profit. Bidders should avoid nominal pricing for some lines and enhanced pricing for other lines. Bids that the Chief Procurement Officer considers in his/her opinion to be materially unbalanced will be rejected.

ITEM NO.	CODE NO.	DESCRIPTION	UNIT	ESTIMATED TOTAL QUANTITY	UNIT PRICE	TOTAL PRICE
34	40600827	POLYMERIZED LEVELING BINDER (MACHINE METHOD), IL-4.75, N50	TON	306		
35	40600982	HOT-MIX ASPHALT SURFACE REMOVAL - BUTT JOINT	SQ YD	167		
36	40600990	TEMPORARY RAMP	SQ YD	667		
37	40603153	POLYMERIZED HOT-MIX ASPHALT SURFACE COURSE, STONE MATRIX ASPHALT, N80	TON	680		
38	CDOT4060105	HOT-MIX ASPHALT SURFACE COURSE, IL-9.5L, MIX "C", N30 (CDOT)	TON	432		
39	42000080	PAVEMENT CONNECTOR (PCC) FOR BRIDGE APPROACH SLAB	SQ YD	222		
40	CDOT4240010	PORTLAND CEMENT CONCRETE SIDEWALK, 5"	SQ FT	5,960		
41	CDOT4240040	PORTLAND CEMENT CONCRETE ADA RAMP 8 INCH	SQ FT	25		
42	44000100	PAVEMENT REMOVAL	SQ YD	179		
43	44000300	CURB REMOVAL	FOOT	749		
44	44000500	COMBINATION CURB AND GUTTER REMOVAL	FOOT	901		

SCHEDULE OF PRICES
CDOT PROJECT NO. E-5-038/ Specification No. 425139
IRVING PARK ROAD OVER NORTH BRANCH CHICAGO RIVER

Bidder's pricing for each line item should carry its share of the costs of work, plus its share of overhead and profit. Bidders should avoid nominal pricing for some lines and enhanced pricing for other lines. Bids that the Chief Procurement Officer considers in his/her opinion to be materially unbalanced will be rejected.

ITEM NO.	CODE NO.	DESCRIPTION	UNIT	ESTIMATED TOTAL QUANTITY	UNIT PRICE	TOTAL PRICE
45	44000600	SIDEWALK REMOVAL	SQ FT	6,585		
46	44003100	MEDIAN REMOVAL	SQ FT	2,002		
47	CDOT4400010	HOT-MIX ASPHALT SURFACE REMOVAL, VARIABLE DEPTH	SQ YD	5,837		
48	44201298	DOWEL BARS 1 1/4"	EACH	62		
49	44213200	SAW CUTS	FOOT	626		
50	44213208	TIE BARS 1 1/4"	EACH	472		
51	CDOT5010010	REMOVAL OF EXISTING STRUCTURES	L.SUM	1		
52	CDOT5010030	CONCRETE REMOVAL	CU YD	30		
53	50157300	PROTECTIVE SHIELD	SQ YD	1,225		
54	50200100	STRUCTURE EXCAVATION	CU YD	95		
55	50200300	COFFERDAM EXCAVATION	CU YD	493		

SCHEDULE OF PRICES
CDOT PROJECT NO. E-5-038/ Specification No. 425139
IRVING PARK ROAD OVER NORTH BRANCH CHICAGO RIVER

Bidder's pricing for each line item should carry its share of the costs of work, plus its share of overhead and profit. Bidders should avoid nominal pricing for some lines and enhanced pricing for other lines. Bids that the Chief Procurement Officer considers in his/her opinion to be materially unbalanced will be rejected.

ITEM NO.	CODE NO.	DESCRIPTION	UNIT	ESTIMATED TOTAL QUANTITY	UNIT PRICE	TOTAL PRICE
56	50201101	COFFERDAM (TYPE 1) (LOCATION - 1)	EACH	1		
57	50201102	COFFERDAM (TYPE 1) (LOCATION - 2)	EACH	1		
58	50300260	BRIDGE DECK GROOVING	SQ YD	1,986		
59	50300285	FORM LINER TEXTURED SURFACE	SQ FT	1,253		
60	CDOT5030010	DRAINAGE SCUPPERS, DS-12	EACH	4		
61	CDOT5030020	HIGH PERFORMANCE CONCRETE STRUCTURES	CU YD	1,626.1		
62	CDOT5030030	HIGH PERFORMANCE CONCRETE SUPERSTRUCTURES	CU YD	951.4		
63	CDOT5030070	LATEX CONCRETE OVERLAY FOR NEW BRIDGE DECK, 2-1/4 INCH	SQ YD	2,001		
64	50500505	STUD SHEAR CONNECTORS	EACH	13,252		
65	CDOT5050010	FURNISHING AND ERECTING STRUCTURAL STEEL	L.SUM	1		
66	50800205	REINFORCEMENT BARS, EPOXY COATED	POUND	329,700		

SCHEDULE OF PRICES
CDOT PROJECT NO. E-5-038/ Specification No. 425139
IRVING PARK ROAD OVER NORTH BRANCH CHICAGO RIVER

Bidder's pricing for each line item should carry its share of the costs of work, plus its share of overhead and profit. Bidders should avoid nominal pricing for some lines and enhanced pricing for other lines. Bids that the Chief Procurement Officer considers in his/her opinion to be materially unbalanced will be rejected.

ITEM NO.	CODE NO.	DESCRIPTION	UNIT	ESTIMATED TOTAL QUANTITY	UNIT PRICE	TOTAL PRICE
67	50800515	BAR SPLICERS	EACH	2,940		
68	51500100	NAME PLATES	EACH	1		
69	52000110	PREFORMED JOINT STRIP SEAL	FOOT	202		
70	52100020	ELASTOMERIC BEARING ASSEMBLY, TYPE II	EACH	42		
71	52100505	ANCHOR BOLTS, 5/8"	EACH	28		
72	52100530	ANCHOR BOLTS, 1 1/4"	EACH	84		
73	52200015	PERMANENT SHEET PILING	SQ FT	11,680		
74	52200100	FURNISHING SOLDIER PILES (HP SECTION)	FOOT	1,036		
75	52200150	DRIVING SOLDIER PILES	FOOT	1,036		
76	52200250	UNTREATED TIMBER LAGGING	SQ FT	928		
77	52200800	SEGMENTAL CONCRETE BLOCK WALL	SQ FT	250		

SCHEDULE OF PRICES
CDOT PROJECT NO. E-5-038/ Specification No. 425139
IRVING PARK ROAD OVER NORTH BRANCH CHICAGO RIVER

Bidder's pricing for each line item should carry its share of the costs of work, plus its share of overhead and profit. Bidders should avoid nominal pricing for some lines and enhanced pricing for other lines. Bids that the Chief Procurement Officer considers in his/her opinion to be materially unbalanced will be rejected.

ITEM NO.	CODE NO.	DESCRIPTION	UNIT	ESTIMATED TOTAL QUANTITY	UNIT PRICE	TOTAL PRICE
78	52200900	CONCRETE STRUCTURES (RETAINING WALL)	CU YD	27		
79	54213657	PRECAST REINFORCED CONCRETE FLARED END SECTIONS 12"	EACH	1		
80	54215472	CAST-IN-PLACE REINFORCED CONCRETE END SECTIONS 72"	EACH	1		
81	54248510	CONCRETE COLLAR	CU YD	10		
82	550A0050	STORM SEWERS, CLASS A, TYPE 1 12"	FOOT	97		
83	56103300	DUCTILE IRON WATER MAIN 12"	FOOT	535		
84	56400500	FIRE HYDRANTS TO BE REMOVED	EACH	3		
85	56400600	FIRE HYDRANTS	EACH	2		
86	58700300	CONCRETE SEALER	SQ FT	14,825		
87	CDOT5870010	PROTECTIVE CONCRETE SEALER	SQ YD	2,946		
88	59100100	GEOCOMPOSITE WALL DRAIN	SQ YD	797		

SCHEDULE OF PRICES
CDOT PROJECT NO. E-5-038/ Specification No. 425139
IRVING PARK ROAD OVER NORTH BRANCH CHICAGO RIVER

Bidder's pricing for each line item should carry its share of the costs of work, plus its share of overhead and profit. Bidders should avoid nominal pricing for some lines and enhanced pricing for other lines. Bids that the Chief Procurement Officer considers in his/her opinion to be materially unbalanced will be rejected.

ITEM NO.	CODE NO.	DESCRIPTION	UNIT	ESTIMATED TOTAL QUANTITY	UNIT PRICE	TOTAL PRICE
89	59300100	CONTROLLED LOW-STRENGTH MATERIAL	CU YD	34		
90	60200905	CATCH BASINS, TYPE A, 4'-DIAMETER, TYPE 9 FRAME AND GRATE	EACH	1		
91	60201005	CATCH BASINS, TYPE A, 4'-DIAMETER, TYPE 10 FRAME AND GRATE	EACH	1		
92	60218400	MANHOLE TYPE A, 4' DIAMETER, TYPE 1 FRAME, CLOSED LID	EACH	1		
93	60236700	INLETS, TYPE A, TYPE 10 FRAME AND GRATE	EACH	1		
94	60250200	CATCHBASINS TO BE ADJUSTED	EACH	4		
95	60255500	MANHOLES TO BE ADJUSTED	EACH	10		
96	60265700	VALVE VAULTS TO BE ADJUSTED	EACH	5		
97	60600605	CONCRETE CURB, TYPE B	FOOT	202		
98	60602800	CONCRETE GUTTER, TYPE B	FOOT	451		
99	CDOT6060020	COMBINATION CONCRETE CURB AND GUTTER, TYPE B-V.12	FOOT	579		

SCHEDULE OF PRICES
CDOT PROJECT NO. E-5-038/ Specification No. 425139
IRVING PARK ROAD OVER NORTH BRANCH CHICAGO RIVER

Bidder's pricing for each line item should carry its share of the costs of work, plus its share of overhead and profit. Bidders should avoid nominal pricing for some lines and enhanced pricing for other lines. Bids that the Chief Procurement Officer considers in his/her opinion to be materially unbalanced will be rejected.

ITEM NO.	CODE NO.	DESCRIPTION	UNIT	ESTIMATED TOTAL QUANTITY	UNIT PRICE	TOTAL PRICE
100	CDOT6640010	TEMPORARY CHAIN LINK FENCE WITH SCREENING, 6'	FOOT	1,192		
101	CDOT6640030	RELOCATE TEMPORARY CHAIN LINK FENCE WITH SCREENING	FOOT	1,192		
102	CDOT6700010	ENGINEER'S FIELD OFFICE	CAL MO	22		
103	67100100	MOBILIZATION	LSUM	1		
104	66900200	NON SPECIAL WASTE DISPOSAL	CU YD	1,500		
105	66900205	SPECIAL WASTE DISPOSAL	CU YD	50		
106	66900450	SPECIAL WASTE PLANS AND REPORTS	LSUM	1		
107	66900530	SOIL DISPOSAL ANALYSIS	EACH	12		
108	66900665	TCL SOIL ANALYSIS	EACH	12		
109	70106800	CHANGEABLE MESSAGE SIGN	CAL MO	44		
110	70300100	SHORT TERM PAVEMENT MARKING	FOOT	925		

SCHEDULE OF PRICES
CDOT PROJECT NO. E-5-038/ Specification No. 425139
IRVING PARK ROAD OVER NORTH BRANCH CHICAGO RIVER

Bidder's pricing for each line item should carry its share of the costs of work, plus its share of overhead and profit. Bidders should avoid nominal pricing for some lines and enhanced pricing for other lines. Bids that the Chief Procurement Officer considers in his/her opinion to be materially unbalanced will be rejected.

ITEM NO.	CODE NO.	DESCRIPTION	UNIT	ESTIMATED TOTAL QUANTITY	UNIT PRICE	TOTAL PRICE
111	70300150	SHORT TERM PAVEMENT MARKING REMOVAL	SQ FT	305		
112	70300220	TEMPORARY PAVEMENT MARKING - LINE 4"	FOOT	13,066		
113	70300260	TEMPORARY PAVEMENT MARKING - LINE 12"	FOOT	440		
114	70400100	TEMPORARY CONCRETE BARRIER	FOOT	1,863		
115	70400200	RELOCATE TEMPORARY CONCRETE BARRIER	FOOT	2,150		
116	70600255	IMPACT ATTENUATORS, TEMPORARY (FULLY REDIRECTIVE, NARROW), TEST LEVEL 2	EACH	5		
117	70600322	IMPACT ATTENUATORS, RELOCATE (FULLY REDIRECTIVE, NARROW), TEST LEVEL 2	EACH	6		
118	73000100	WOOD SIGN SUPPORT	FOOT	27		
119	78000600	THERMOPLASTIC PAVEMENT MARKING - LINE 12"	FOOT	579		
120	78000200	THERMOPLASTIC PAVEMENT MARKING - LINE 4"	FOOT	5,299		

SCHEDULE OF PRICES
CDOT PROJECT NO. E-5-038/ Specification No. 425139
IRVING PARK ROAD OVER NORTH BRANCH CHICAGO RIVER

Bidder's pricing for each line item should carry its share of the costs of work, plus its share of overhead and profit. Bidders should avoid nominal pricing for some lines and enhanced pricing for other lines. Bids that the Chief Procurement Officer considers in his/her opinion to be materially unbalanced will be rejected.

ITEM NO.	CODE NO.	DESCRIPTION	UNIT	ESTIMATED TOTAL QUANTITY	UNIT PRICE	TOTAL PRICE
121	78000400	THERMOPLASTIC PAVEMENT MARKING - LINE 6"	FOOT	270		
122	78000650	THERMOPLASTIC PAVEMENT MARKING - LINE 24"	FOOT	43		
123	78000100	THERMOPLASTIC PAVEMENT MARKING - LETTERS AND SYMBOLS	SQ FT	30		
124	78008210	POLYUREA PAVEMENT MARKING TYPE I - LINE 4"	FOOT	1,089		
125	78008230	POLYUREA PAVEMENT MARKING TYPE I - LINE 6"	FOOT	843		
126	78008250	POLYUREA PAVEMENT MARKING TYPE I - LINE 12"	FOOT	153		
127	78200010	BARRIER WALL REFLECTOR, TYPE B	EACH	38		
128	78300100	PAVEMENT MARKING REMOVAL	SQ FT	6,138		
129	81028350	UNDERGROUND CONDUIT, PVC, 2" DIA.	FOOT	225		
130	81100200	CONDUIT ATTACHED TO STRUCTURE, 3/4" DIA., GALVANIZED STEEL	FOOT	182		
131	81300220	JUNCTION BOX, STAINLESS STEEL, ATTACHED TO STRUCTURE, 6" X 6" X 4"	EACH	6		

SCHEDULE OF PRICES
CDOT PROJECT NO. E-5-038/ Specification No. 425139
IRVING PARK ROAD OVER NORTH BRANCH CHICAGO RIVER

Bidder's pricing for each line item should carry its share of the costs of work, plus its share of overhead and profit. Bidders should avoid nominal pricing for some lines and enhanced pricing for other lines. Bids that the Chief Procurement Officer considers in his/her opinion to be materially unbalanced will be rejected.

ITEM NO.	CODE NO.	DESCRIPTION	UNIT	ESTIMATED TOTAL QUANTITY	UNIT PRICE	TOTAL PRICE
132	81300550	JUNCTION BOX, STAINLESS STEEL, ATTACHED TO STRUCTURE, 12" X 12" X 6"	EACH	1		
133	X0321809	PERMANENT GROUND ANCHOR	EACH	27		
134	X0321963	MICRO-PILES	EACH	154		
135	X0323360	WOODEN POLE REMOVAL	EACH	1		
136	X0323432	MICROPILE LOAD TEST	EACH	4		
137	X0323433	MICROPILE PROOF LOAD TEST	EACH	12		
138	X0324044	EROSION CONTROL, TEMPORARY PIPE SLOPE DRAIN	EACH	2		
139	X0327213	REMOVE TEMPORARY PIPE SLOPE DRAIN	EACH	2		
140	X0327552	TREE GRATE REMOVAL	EACH	7		
141	X0327691	GRATING FOR CONCRETE HEADWALL NO 1	EACH	1		
142	X2020502	BRACED EXCAVATION	CU YD	2,075		

SCHEDULE OF PRICES
CDOT PROJECT NO. E-5-038/ Specification No. 425139
IRVING PARK ROAD OVER NORTH BRANCH CHICAGO RIVER

Bidder's pricing for each line item should carry its share of the costs of work, plus its share of overhead and profit. Bidders should avoid nominal pricing for some lines and enhanced pricing for other lines. Bids that the Chief Procurement Officer considers in his/her opinion to be materially unbalanced will be rejected.

ITEM NO.	CODE NO.	DESCRIPTION	UNIT	ESTIMATED TOTAL QUANTITY	UNIT PRICE	TOTAL PRICE
143	X2200018	ORNAMENTAL FENCE	FOOT	630		
144	X5090850	ORNAMENTAL RAILING	FOOT	653		
145	X5860110	GRANULAR BACKFILL FOR STRUCTURES	CU YD	1,640		
146	X6061460	PAVED DITCH (SPECIAL)	FOOT	22		
147	X6640555	CHAIN LINK FENCE, 5' (SPECIAL)	FOOT	197		
148	X7010216	TRAFFIC CONTROL AND PROTECTION, (SPECIAL)	LSUM	1		
149	X8140105	HANDHOLE (SPECIAL)	EACH	1		
150	Z0007124	STEEL RAILING (SPECIAL)	FOOT	795		
151	Z0007126	HANDRAIL REMOVAL	FOOT	133		
152	Z0007430	TEMPORARY SIDEWALK	SQ FT	963		
153	Z0012754	STRUCTURAL REPAIR OF CONCRETE (DEPTH EQUAL TO OR LESS THAN 5 INCHES)	SQ FT	27		

SCHEDULE OF PRICES
CDOT PROJECT NO. E-5-038/ Specification No. 425139
IRVING PARK ROAD OVER NORTH BRANCH CHICAGO RIVER

Bidder's pricing for each line item should carry its share of the costs of work, plus its share of overhead and profit. Bidders should avoid nominal pricing for some lines and enhanced pricing for other lines. Bids that the Chief Procurement Officer considers in his/her opinion to be materially unbalanced will be rejected.

ITEM NO.	CODE NO.	DESCRIPTION	UNIT	ESTIMATED TOTAL QUANTITY	UNIT PRICE	TOTAL PRICE
154	Z0013797	STABILIZED CONSTRUCTION ENTRANCE	SQ YD	224		
155	Z0013798	CONSTRUCTION LAYOUT	LSUM	1		
156	Z0030850	TEMPORARY INFORMATION SIGNING	SQ FT	52		
157	Z0046304	PIPE UNDERDRAINS FOR STRUCTURES 4"	FOOT	670		
158	********	SUBBASE GRANULAR MATERIAL, NON-LIMESTONE	CU YD	5		
159	********	PERMEABLE PAVERS	SQ FT	264		
160	********	PERMEABLE PAVER REMOVAL	SQ FT	923		
161	********	GRADING AND SHAPING SHARED USE PATH	UNIT	8		
162	********	MAINTENANCE OF ACCESS TO ABUTTING PROPERTIES	LSUM	1		
163	********	CAST IRON TREE GRATES, GRATE FRAMES, AND THICKENED SLAB, 5' BY 10'	EACH	3		
164	********	REMOVAL OF EXISTING WOODCHIP TRAIL	SQ FT	2,250		

SCHEDULE OF PRICES
CDOT PROJECT NO. E-5-038/ Specification No. 425139
IRVING PARK ROAD OVER NORTH BRANCH CHICAGO RIVER

Bidder's pricing for each line item should carry its share of the costs of work, plus its share of overhead and profit. Bidders should avoid nominal pricing for some lines and enhanced pricing for other lines. Bids that the Chief Procurement Officer considers in his/her opinion to be materially unbalanced will be rejected.

ITEM NO.	CODE NO.	DESCRIPTION	UNIT	ESTIMATED TOTAL QUANTITY	UNIT PRICE	TOTAL PRICE
165	********	MULCH TRAIL	FOOT	510		
166	********	REMOVE EXISTING SIGN PANEL AND SALVAGE	EACH	12		
167	********	REMOVE EXISTING SIGN PANEL AND POLE ASSEMBLY, FROM SIDEWALK, AND SALVAGE	EACH	2		
168	********	FURNISH SIGN PANEL, TYPE 1, REFLECTIVE, TYPE A, SINGLE-SIDED	SQ FT	56		
169	********	FURNISH SIGN PANEL, TYPE 1, REFLECTIVE, TYPE A, DOUBLE-SIDED	SQ FT	14		
170	********	FURNISH AND INSTALL PROJECT SIGN, TYPE A	EACH	2		
171	********	FURNISH AND INSTALL PROJECT SIGN, TYPE B	EACH	2		
172	********	FURNISH AND INSTALL PROJECT SIGN, BANNER	EACH	1		
173	********	FURNISH AND INSTALL POLE, DRILL METHOD	EACH	9		
174	********	INSTALL SIGN PANEL TY. 1, CENTER MOUNT ON SIGN POLE	EACH	13		
175	********	INSTALL SIGN PANEL TY. 1, FLAG MOUNT ON SIGN POLE	EACH	6		

SCHEDULE OF PRICES
CDOT PROJECT NO. E-5-038/ Specification No. 425139
IRVING PARK ROAD OVER NORTH BRANCH CHICAGO RIVER

Bidder's pricing for each line item should carry its share of the costs of work, plus its share of overhead and profit. Bidders should avoid nominal pricing for some lines and enhanced pricing for other lines. Bids that the Chief Procurement Officer considers in his/her opinion to be materially unbalanced will be rejected.

ITEM NO.	CODE NO.	DESCRIPTION	UNIT	ESTIMATED TOTAL QUANTITY	UNIT PRICE	TOTAL PRICE
176	********	TRENCH AND BACKFILL WITH SCREENINGS	FOOT	888		
177	********	ELECTRICAL HANDHOLE, 30", 24" FRAME AND LID	EACH	2		
178	********	DRILL EXISTING MANHOLE OR HANDHOLE	EACH	20		
179	********	GALVANIZED STEEL CONDUIT ATTACHED TO STRUCTURE 2"	FOOT	874		
180	********	PVC CONDUIT IN TRENCH 2"	FOOT	1,279		
181	********	GALVANIZED STEEL CONDUIT IN TRENCH 2"	FOOT	15		
182	********	GALVANIZED STEEL CONDUIT IN TRENCH 3"	FOOT	15		
183	********	GALVANIZED STEEL CONDUIT ATTACHED TO STRUCTURE 4"	FOOT	580		
184	********	CONCRETE FOUNDATION, 28" DIAMETER, 1 1/4" ANCHOR RODS, 15" BOLT CIRCLE, 7 FEET	EACH	6		
185	********	CONCRETE FOUNDATION, 30" DIAMETER, 1" ANCHOR RODS, 15" BOLT CIRCLE, 7 FEET	EACH	2		

SCHEDULE OF PRICES
CDOT PROJECT NO. E-5-038/ Specification No. 425139
IRVING PARK ROAD OVER NORTH BRANCH CHICAGO RIVER

Bidder's pricing for each line item should carry its share of the costs of work, plus its share of overhead and profit. Bidders should avoid nominal pricing for some lines and enhanced pricing for other lines. Bids that the Chief Procurement Officer considers in his/her opinion to be materially unbalanced will be rejected.

ITEM NO.	CODE NO.	DESCRIPTION	UNIT	ESTIMATED TOTAL QUANTITY	UNIT PRICE	TOTAL PRICE
186	********	ELBOW, CONDUIT, STEEL, 2" ADJACENT TO EMBEDDED POLE/STRUCTURE	EACH	3		
187	********	CONDUIT RISER UP POLE 2"	EACH	3		
188	********	ELECTRIC CABLE IN CONDUIT, 1/C NO. 6	FOOT	1,154		
189	********	ELECTRIC CABLE IN CONDUIT, TRIPLEX, 2 1/C NO. 6, 1 1/C NO. 8	FOOT	1,340		
190	********	CHICAGO 2000 STREET LIGHT UNIT	EACH	8		
191	********	EXTENDED LOOP LIGHT UNIT	EACH	2		
192	********	LUMINAIRE, CHICAGO 2000 PENDANT, LED, TYPE III	EACH	11		
193	********	LUMINAIRE, ORNAMENTAL, ACORN, LED, TYPE III	EACH	4		
194	********	MAINTAIN EXISTING LIGHTING SYSTEM	LSUM	1		
195	********	MAINTENANCE OF EXISTING FIRE ALARM CABLE, AND DISCONNECTION AND RECONNECTION OF INTERCONNECT CABLE	LSUM	1		

SCHEDULE OF PRICES
CDOT PROJECT NO. E-5-038/ Specification No. 425139
IRVING PARK ROAD OVER NORTH BRANCH CHICAGO RIVER

Bidder's pricing for each line item should carry its share of the costs of work, plus its share of overhead and profit. Bidders should avoid nominal pricing for some lines and enhanced pricing for other lines. Bids that the Chief Procurement Officer considers in his/her opinion to be materially unbalanced will be rejected.

ITEM NO.	CODE NO.	DESCRIPTION	UNIT	ESTIMATED TOTAL QUANTITY	UNIT PRICE	TOTAL PRICE
196	********	REMOVE EXISTING STREET LIGHTING EQUIPMENT	LSUM	1		
197	********	BREAKDOWN EXISTING HANDHOLE	EACH	1		
198	********	BREAKDOWN MANHOLE IN PARKWAY	EACH	1		
199	********	BREAKDOWN STREET LIGHT FOUNDATION	EACH	4		
200	********	TRENCH AND BACKFILL FOR ELECTRICAL WORK	FOOT	156		
201	********	ELECTRIC CABLE IN TRENCH, 600V (XLP-TYPE USE) 1/C NO. 6	FOOT	2,442		
202	********	ELECTRIC CABLE IN TRENCH, 600V (XLP-TYPE USE) 1/C NO. 8	FOOT	841		
203	********	ELECTRIC CABLE IN CONDUIT, 600V (XLP-TYPE USE) 1/C NO. 10	FOOT	817		
204	********	PATH LIGHT FIXTURE	EACH	5		
205	********	PATH UNDERPASS LUMINAIRE	EACH	6		
206	********	PATH LIGHT POLE	EACH	5		

SCHEDULE OF PRICES
CDOT PROJECT NO. E-5-038/ Specification No. 425139
IRVING PARK ROAD OVER NORTH BRANCH CHICAGO RIVER

Bidder's pricing for each line item should carry its share of the costs of work, plus its share of overhead and profit. Bidders should avoid nominal pricing for some lines and enhanced pricing for other lines. Bids that the Chief Procurement Officer considers in his/her opinion to be materially unbalanced will be rejected.

ITEM NO.	CODE NO.	DESCRIPTION	UNIT	ESTIMATED TOTAL QUANTITY	UNIT PRICE	TOTAL PRICE
207	********	CONTROLLER, UNDERPASS LIGHTING, WALL MOUNTED, 1 PHASE, 60 AMP	EACH	1		
208	********	SERVICE CONNECTION TO CECO LINE	EACH	1		
209	********	SERVICE INSTALLATION, 100 AMP	EACH	1		
210	********	SERVICE CABLE, 3/C NO. 2	FOOT	616		
211	********	MONITORING OF EXISTING FACILITIES	LSUM	1		
212	Z0076600	TRAINEES	HOUR	3,000		
					TOTAL BASE BID:	

SECTION TWO

REQUIREMENTS FOR BIDDING AND INSTRUCTIONS FOR BIDDERS

Contract for Work

Proposals are received by the Chief Procurement Officer of the City of Chicago in accordance with Contract Documents as set forth herein.

1. Examination by Bidder

The bidder must, before submitting its bid, carefully examine the proposal, plans, specifications, contract documents and bonds. The bidder must inspect in detail the site of the proposed work and become familiar with all of the local conditions affecting the contract and the detailed requirements of construction. If its bid is accepted, the bidder will be responsible for all errors in its proposal resulting from failure or neglect to comply with these instructions. The City will, in no case, be responsible for any change in anticipated profits resulting from such failure or neglect.

Unless otherwise provided in the Contract, when the plans or specifications include information pertaining to subsurface exploration, borings, test pits, and other preliminary investigation, such information represents only the opinion of the City as to the location, character, or quantity of the materials encountered and is only included for the convenience of the bidder. The City assumes no responsibility with respect to the sufficiency or accuracy of the information, and there is no guaranty, either expressed or implied, that the conditions indicated are representative of those existing throughout the work, or that unanticipated developments may not occur.

2. Bid Deposit

Bid deposit shall be required for all competitive sealed bidding for contracts when required in the legal advertisement. Bid deposit shall be a bond provided by a surety company authorized to do business in the State of Illinois, or the equivalent in cashiers check, money order or certified check. All certified checks must be drawn on a bank doing business in the United States, and shall be made payable to the order of the City of Chicago. CASH IS NOT AN ACCEPTABLE FORM OF BID DEPOSIT.

Bid deposits shall be in the amount shown in the advertisement or as may be prescribed herein, but not in excess of 10% of the bid. Should the amount of the bid deposit shown in the advertisement prove to be more than 10% of the bid, then the bidder may submit, in lieu of the foregoing, an amount equal to 10% of his bid. When the legal advertisement requires a deposit, noncompliance requires rejection of the bid. Compliance with the provisions herewith shall be determined in all cases by the Chief Procurement Officer and his determination shall be final.

After bids are opened, deposits shall be irrevocable for the period specified herein. If a bidder is permitted to withdraw its bid before award, no action shall be taken against the bidder or the bid deposit.

3. Preparation of Proposal

The bidder shall prepare its proposal on the attached proposal forms. Unless otherwise stated, all blank spaces on the proposal page or pages, applicable to the subject specification, must be correctly filled in. Either a unit price or a lump sum price, as the case may be, must be stated for each and every item, either typed in or written in ink, in figures, and, if required, in words.

If bidder is a corporation, the President and Secretary must execute the bid and the Corporate seal must be affixed. In the event that this bid is executed by other than the President, attach hereto a certified copy of that section of Corporate By-Laws or other authorization by the Corporation which permits the person to execute the offer for the corporation.

If bidder is a partnership, all partners must execute the bid, unless one partner has been authorized to sign for the partnership, in which case, evidence of such authority satisfactory to the Chief Procurement Officer shall be submitted.

If bidder is a sole proprietorship, the sole proprietorship must execute the bid. A "Partnership", "Joint Venture" or "Sole Proprietorship" operating under an Assumed Name must be registered with the Illinois county in which located, as provided in 805ILCS 405 (1992).

4. Submission of Proposals

All prospective bidders shall submit sealed proposals with applicable bid deposit enclosed in envelopes provided for that purpose by the DEPARTMENT OF PROCUREMENT SERVICES, 1st Floor, City Hall. If proposals are submitted in envelopes other than those so provided for this purpose, then the sealed envelope submitted by the prospective bidder shall carry the following information on the face of the envelope: bidder's name, address, subject matter of proposal, advertised date of bid opening and the hour designated for bid opening as shown on the legal advertisement.

Where proposals are sent by mail to the DEPARTMENT OF PROCUREMENT SERVICES, the bidders shall be responsible for their delivery to the Chief Procurement Officer before the advertised date and hour for the opening of bids. If the mail is delayed beyond the date and hour set for the bid opening, proposals thus delayed will not be accepted.

Proposals must be submitted with original signatures in the space provided on the appropriate Proposal Execution Page. Proposals not properly signed shall be rejected.

5. Withdrawal of Proposals

Bidders may withdraw their proposals at any time prior to the time specified in the advertisement as the closing time for the receipt of bids. However, no bidder shall withdraw or cancel his proposal for a period of 60 calendar days after said advertised closing time for the receipt of proposals nor shall the successful bidder withdraw or cancel or modify his proposal after having been notified by the Chief Procurement Officer that said proposal has been accepted by the City. The City reserves the right to withhold and deposit, as liquidated damages

and not a penalty, the bid deposit of any bidder requesting withdrawal, cancellation or modification of its proposal prior to the stated period for acceptance of proposal.

Where this contract shall be approved by another agency, such as the Federal Government or State of Illinois, then the bidder shall not withdraw or cancel or modify his proposal for a period of 90 calendar days after said advertised closing time for the receipt of proposals.

6. Competency of Bidder

The Chief Procurement Officer reserves the right to refuse to award a Contract to any person, firm or corporation that is in arrears or is in default to the City of Chicago upon any debt or contract, or that is a defaulter, as surety or otherwise, upon any obligation to said City, or had failed to perform faithfully any previous contract with the City.

The bidder, if requested, must present within a reasonable time, as determined by the Chief Procurement Officer, evidence satisfactory to the Chief Procurement Officer of performance ability and possession of necessary facilities, pecuniary resources and adequate insurance to comply with the terms of these specifications and contract documents.

7. Consideration of Proposals

The Chief Procurement Officer represents and act for the City in all matters pertaining to this proposal and contract in conjunction therewith. The Chief Procurement Officer reserves the right to reject any or all proposals and to disregard any informality in the bids and bidding, when in his opinion the best interest of the City will be served by such action. The proposal is contained in these contract documents and MUST NOT BE DETACHED HERE FROM by any bidder when submitting a proposal. Incomplete proposals are subject to rejection.

8. Balanced Bids

Bidder's pricing for each line item should carry its share of the cost of work, plus its share of overhead and profit. Bidders should avoid nominal pricing for some lines and enhanced pricing for other lines. Bids that the Chief Procurement Officer considers in his sole opinion to be materially unbalanced will be rejected.

9. Acceptance of Proposals

The Chief Procurement Officer will accept in writing one of the proposals or reject all proposals, within 60 calendar days, or within 90 calendar days where approval by other agencies is required, from the date of opening of bids, unless the lowest responsible bidder, upon request of the City, extends the time of acceptance to the City.

10. Performance Bond

When required by the Chief Procurement Officer the successful bidder or bidders shall, within seven (7) calendar days of receipt of notice from the City, furnish a performance bond in the full amount of the contract on Form P.W.O. 62, a specimen of which is bound herein.

Receipt of written notice from the City to furnish a bond constitutes tentative notice of pending award and proposal acceptance. Release of the contract shall be withheld pending receipt and approval of a satisfactory bond.

Attention is called to the provisions of 30 ILCS 550/1, et.seq. and to the provisions of Section 2-92-030 of the Municipal Code of Chicago.

11. Failure to Furnish Bond

In the event that the bidder fails to furnish the performance bond in said period of seven (7) calendar days, then the bid deposit of the bidder shall be retained by the City as liquidated damages and not as a penalty.

12. Interpretation of Contract Documents

If any person contemplating submitting a proposal is in doubt as to the true meaning of any part of the specifications or other contract documents, a written request for an interpretation thereof may be submitted to the Chief Procurement Officer. The person submitting the request will be responsible for its prompt delivery. Any interpretation of the proposed documents will be made only by an addendum duly issued by the Chief Procurement Officer. A copy of such addendum will be mailed, faxed, electronically mailed or delivered to each person receiving a set of such contract documents and to such other prospective bidders as shall have requested that they be furnished with a copy of each addendum. Failure on the part of the prospective bidder to receive a written interpretation prior to the time of the opening of bids will not be grounds for withdrawal of proposal. Bidder will acknowledge receipt of each addendum issued in space provided on proposal page. Oral explanations will not be binding.

13. Catalogs

Each bidder must submit, where necessary, or when requested by the Chief Procurement Officer, catalogs, descriptive literature, and detailed drawings, fully detailing features, designs, construction, appointments, finishes and the like not covered in the specifications, necessary to fully describe the material or work he proposes to furnish.

14. Substitution

The Bidder must, if awarded the Contract, provide the items specified in the Contract Documents when those items are specified by manufacturer's trade name in Book-Three, unless equivalent alternatives have been proposed as described below. Reference to a specific manufacturer, trade name, or catalog is intended to be descriptive but not restrictive and only to

indicate to the prospective bidder items that will be satisfactory. The Bidder may bid another product(s) provided that the alternative product is on a separate sheet of paper designated as such and is supported by the type of information listed in Section VII.D.1.a.,b.,e.,g.,h., and Section VII.D.2., of the Terms and Conditions for Construction, in order to facilitate the Chief Procurement Officer's evaluation of such product. The Chief Procurement Officer may, in his sole discretion, accept an alternate bid for a specified item, provided the alternate item so bid is, in the Chief Procurement Officer's sole opinion, the equivalent of the item specified in the Contract Documents. An alternate that is not equivalent to the specified item may render the bid non-responsive. Unless the alternate item is so identified, it is understood that the Bidder proposes, and will be required to provide, the specific item described in the Contract Documents. No substitution of specified items will be allowed thereafter except as provided in Section VII.D.2., of the Terms and Conditions for Construction.

15. Return of Bid Deposit

The bid deposit of all except the two lowest bidders on each contract will be returned shortly after the bid opening. The Chief Procurement Officer reserves the right to hold all bid deposits, if the intent is to award multiple contracts for a requirement and/or if the two lowest responsible bidders cannot be readily determined based on price until all proposals have been evaluated.

The remaining bid deposits on each contract will be returned with the exception of the accepted bidder, after the Chief Procurement Officer has awarded the contract. The bid deposit of the accepted bidder will be returned after the contract has been awarded and a satisfactory performance bond has been approved, where such bond is required.

16. Taxes

Federal Excise Tax does not apply to materials purchased by the City of Chicago by virtue of Exemption Certificate No. 36-6005820 and State of Illinois Sales Tax does not apply by virtue of Exemption Certificate No. E9998-1874-01. Illinois Retailers' Occupation Tax, Use Tax, and Municipal Retailers' Occupation Tax do not apply to materials or services purchased by the City of Chicago by virtue of Illinois statutes. The price or prices quoted herein shall include all other Federal and/or State, direct and/or indirect taxes which apply. The prices quoted herein shall agree with all Federal Laws and Regulations.

17. Contractor's Financial Statement

Each bidder must either (1) submit with the bid a current and valid Illinois Department of Transportation (IDOT) 'Certificate of Eligibility' issued by IDOT as a result of filing with IDOT an APPLICATION FOR PREQUALIFICATION: STATEMENT OF EXPERIENCE, EQUIPMENT AND FINANCIAL CONDITION showing prequalification in the required work categories, or (2) if the bidder has not been issued an applicable IDOT 'Certificate of Eligibility,' bidder must have on file in the office of the Chief Procurement Officer prior to bid opening a CONTRACTOR'S STATEMENT OF EXPERIENCE AND FINANCIAL CONDITION dated not earlier than the end of the Contractor's last fiscal year period. This Statement shall be kept on file by the Chief Procurement Officer as a representative statement for a period of one year

only. Forms are available at the office of the Bid and Bond Section, DEPARTMENT OF PROCUREMENT SERVICES, Room 103 City Hall, 121 North LaSalle Street, Chicago, Illinois, 60602, 312-744-9773 or may be obtained online: http://www.cityofchicago.org/city/en/depts/dps/provdrs/contract/svcs/forms_and_standardagreements.html

Failure to submit an IDOT 'Certificate of Eligibility' or alternatively to have a current financial statement on file in the DEPARTMENT OF PROCUREMENT SERVICES at time of bid opening may be cause for the rejection of Contractor's Proposal.

When submitting a CONTRACTOR'S STATEMENT OF EXPERIENCE AND FINANCIAL CONDITION it must be in a PDF format on a labeled CD-ROM that contains complete and all information in a single file. Paper submissions of this STATEMENT are no longer permissible. Additionally include an e-mail address for the Department of Procurement Services to acknowledge receipt of this STATEMENT which will be kept on file by the Chief Procurement Officer as a representative statement for a period of one year only. The Department of Procurement Services no longer issues a financial rating statement or certificate. The financial Statement information must be sent to, DEPARTMENT OF PROCUREMENT SERVICES, Room 806 City Hall, 121 North LaSalle Street, Chicago, Illinois, 60602.

18. Notices

All communications and notices to the City herein provided for shall be faxed, delivered personally, electronically mailed or mailed first class, postage prepaid, to the Commissioner of the using department by name and address listed on the cover hereof, and to the Chief Procurement Officer, Room 806, City Hall, 121 N. LaSalle Street, Chicago, Illinois 60602. All communications and notices to the bidder, unless otherwise provided for, shall be faxed, delivered personally, electronically mailed or mailed first class, postage prepaid, to the bidder by name and address listed on the proposal hereof.

19. Acknowledgment of Receipt of Addenda

The bidder must acknowledge the receipt of all formally issued addenda in the space provided on the signature pages of the Proposal.

20. Economic Disclosure Statement and Affidavit

The Contractor or each joint venture partner shall be required to submit with their bid, proposal or response, a fully executed Economic Disclosure Statement and Affidavit, which includes a Disclosure for Retained Parties, on the form attached herein, signed by an authorized officer of the company before a notary which includes a certification that the Contractor or each joint venture partner, its agents, employees, officers and any subcontractors have not been engaged in or been convicted of bidrigging or bid-rotating activities as defined in the Economic Disclosure Statement and Affidavit. The certification is required in accordance with the Illinois Criminal Code.

21. Disadvantaged Business Enterprise Commitment

The attention of bidders is directed to the Special Condition Regarding Disadvantaged Business Enterprise Commitment and the Proposal Schedules that precede the Proposal form. If awarded the Contract, the bidder agrees to expend at least the percentage of the Contract Price indicated on bidder's Proposal Schedules for participation by bona fide Disadvantaged Business Enterprises. **Appropriate Schedules must be completed and executed by the bidder in submitting a proposal. Refer to Book 1.**

22. Bidders List Information - The following language is included in all bids or proposals:

Information/Documentation required at the time of bid opening or submission of proposals:

Pursuant to 49 CFR Section26.11, the City is required to maintain a bidder's list, consisting of all firms bidding or proposing on prime contracts and bidding or quoting subcontracts. The bidder/proposer is requested to provide a list of all DBE and non-DBE subcontractors who bid or quote price information on this Contract. Failure to cooperate may result in the bidder/proposer being deemed non-responsible in this and future bids.

23. Protests

The bidder shall submit any protests or claims regarding this solicitation to the office of the City's Chief Procurement Officer located at City Hall, 121 North LaSalle Street, Room 806, Chicago, Illinois 60602. A pre-bid protest must be filed no later than the five (5) days before the bid opening date, a pre-award protest must be filed no later than 10days after the bid opening date, and a post-award protest must be filed no later than 10days after the award of the contract.
All protests or claims must set forth the name and address of the protester, the specification number, the grounds for the protest or claim, and the course of action that the protesting party desires that the Chief Procurement Officer take.

Copies of the Bid Protest Procedures are available at the Bid and Bond Room.

24. Bidder's Affidavit (Anti-collusion)

The attention of bidders is called to the following quotation from a Federal Highway Administration memorandum pertinent to this contract:

23 U.S.C. 112(c) requires, as a condition precedent to approval by the Commissioner of the Department of Transportation of the Contract for this work, that there be filed a sworn statement executed by, or on behalf of, the person, firm, association, or corporation to whom such Contract is to be awarded, certifying that such person, firm, association, or corporation has not, either directly or indirectly, entered into any

agreement, participated in any collusion, or otherwise taken any action in restraint of free competitive bidding in connection with such Contract. This sworn statement shall be in the form of an affidavit executed and sworn to by the successful bidder before a person who is authorized by the laws of this state to administer oaths.

The affidavit referenced above is included as part of the City of Chicago Economic Disclosure Statement and Affidavit, instructions for completing are included below.

25. Multi-Project Labor Agreement (PLA)

The City has entered into a Project Labor Agreement ("PLA") with various trades regarding projects involving construction, demolition, maintenance, rehabilitation and/or renovation work, as described in the PLA, a copy of which may be found on the City's website at:

http://www.cityofchicago.org/dam/city/depts/dps/RulesRegulations/Multi-ProjectLaborAgreement-PLAandSignatoryUnions.pdf.

Contractor acknowledges familiarity with the requirements of the PLA and its applicability to any Work under this Agreement, and shall comply in all respects with the PLA.

26. Prevailing Wage Rates

Davis-Bacon Act: The Contractor agrees to comply and assures compliance with the requirements of 49 U.S.C. 5333(a), the Davis-Bacon Act, 40 U.S.C. 276 a(7), and implementing U.S. DOL regulation, Labor Standards Provisions Applicable to Contracts Governing Federally Financed and Assisted Construction (also Labor Standards Provisions Applicable to Nonconstruction Contracts Subject to the Contract Work Hours and Safety Standards Act), 29 C.F.R. Part 5. In addition to other requirements that may apply, the Contractor agrees to pay wages to laborers and mechanics performing contract work at a rate not less than the minimum wages specified in a wage determination issued by the U.S. Secretary of Labor and not less frequently than once a week.

Contractor is responsible for paying the generally prevailing hourly rate of wages in effect, as determined by the Department of Labor, at the time the Work is performed. If the Department of Labor revises the prevailing rate of hourly wages to be paid for the Work before completion of the Project, the revised rate will apply to this Contract from the effective date of the revision, but the revision will not entitle Contractor to any increased compensation under the terms of this Contract.

Prevailing wages are incorporated into the Contract by reference. Current Prevailing Wages may be found at: http://www.wdol.gov/dba.aspx

The Contractor agrees to place a copy of the current prevailing wage determination issued by the U.S. DOL in each solicitation for Subcontractor work under the Project, and agrees to refrain from awarding any affected subcontract until the subcontractor agrees to the required wage determination. The Contractor further agrees to report to USDOT or FHWA every suspected or reported violation of the Davis-Bacon Act or its Federal implementing regulations

Requirements for Bidding and Instructions for Bidders

All Contractors and Subcontractors rendering services under a Contract for the construction of a public work must comply with all requirements of the Act, including but not limited to, all wage, notice and record keeping duties.

The term general prevailing hourly rate, when used in this requirement will mean the hourly cash wages plus fringe benefits for health and welfare, insurance, vacations and pensions paid generally, in the locality in which the work is being performed, to employees engaged in work of a similar character on public works.

As a condition of making payment to the Contractor, the City may require the Contractor to submit an affidavit to the effect that not less than the prevailing hourly wage rate is being paid to laborers, mechanics and other workmen employed on this Contract in accordance with Illinois or federal law, as applicable.

LICENSING OF GENERAL CONTRACTORS

LICENSING OF GENERAL CONTRACTORS

4-36-010 Definitions.
4-36-020 License – Required.
4-36-030 License classifications.
4-36-040 License – Posting – Nontransferability.
4-36-050 License – Application.
4-36-060 License issuance and renewal prohibited when.
4-36-070 License – Fee – Termination.
4-36-080 License number to be printed where.
4-36-090 Proof of insurance – Required.
4-36-100 Reserved.
4-36-110 Unlawful acts.
4-36-120 Duties.
4-36-130 Permit privileges – Suspension for failure to correct defects in work.
4-36-140 License – Immediate suspension based upon a pattern of substantial code violations.
4-36-145 License suspension pending final adjudication of a bribery charge.
4-36-150 License – Suspension or revocation.
4-36-160 License revocation – Four-year wait for new license.
4-36-170 Regulations.
4-36-180 Enforcement.
4-36-190 Violation – Penalty.

4-36-010 Definitions.

As used in this chapter:

"Act related to general contracting" means: (1) any activity requiring a license under this chapter; or (2) any conduct regulated by this chapter; or (3) any activity requiring a building permit issued under Chapter 13-32 of this Code; or (4) any duty or other requirement imposed by this chapter; or (5) any inspection of a building or premises or performance of other legal or work-related duty by a city inspector, city personnel or other government official in connection

with: (i) the issuance of a general contractor license under this chapter, or (ii) the issuance of a building permit under Chapter 13-32 of this Code, or (iii) for the purpose of enforcing the requirements of the building code, zoning code or any other law regulating building construction or the health or safety of construction site workers, of the current or eventual users or occupants of a building or premises or of the general public.

"Building code" has the meaning ascribed to the term in Section 1-4-090.

"City" means the City of Chicago.

"City personnel" means any person employed by the City of Chicago.

"City inspector" means any person authorized by the City of Chicago to conduct an inspection.

"Department" means the department of buildings.

"Commissioner" means the commissioner of buildings.

"Controlling person" means any person who: (1) is an officer, director, partner, general partner, limited partner, manager, managing member or member of any entity seeking or holding a license under this chapter; or (2) owns, directly or indirectly through one or more intermediate ownership entities, 25 percent or more of the interest in the licensee or applicant, as applicable.

"General contractor" means any person who, as an investment or for compensation or with the intent to sell or to lease, (i) arranges or submits a bid or offers to undertake or purports to have the capacity to undertake or undertakes, through himself or through others, to erect, construct, alter, repair, move, install, replace, convert, remodel, rehabilitate, modernize, improve or make additions to any building as defined in Section 13-4-010 or to any appurtenance thereto attached to real estate and located on the same lot as the building, including, but not limited to, driveways, swimming pools, porches, decks, garages, fences, fallout shelters and other accessory objects or uses; and (ii) retains for himself control over the means, method and manner of accomplishing the desired result; and (iii) whose business operations, in whole or in part, require the hiring or supervision of one or more persons from any building trade or craft, including, but not limited to, plumbing, masonry, electrical, heating, air-conditioning or carpentry. The term includes nonresident general contractors who do business within the city and developers of conversion condominiums as defined in the Condominium Property Act, as amended.

"Knowingly", with respect to a material fact, means (i) having actual knowledge of the material fact; or (ii) being aware of facts or information that would cause a reasonable person to have actual knowledge of the material fact; or (iii) acting in deliberate ignorance or reckless disregard of the truth or falsity of the material fact.

"Licensee" means any person licensed or required to be licensed under this chapter.

"Nonresident general contractor" means any general contractor who is not domiciled in the city and has not maintained a permanent place of business or residence in the city for at least six months.

"Zoning code" has the meaning ascribed to the term in Section 1-4-150.

4-36-020 License – Required.

(A) No person shall own, operate, conduct, manage, engage in, maintain or carry on the business of general contractor without first having obtained a general contractor license. The general contractor license shall be in addition to any other license required by law, including, but not limited to, the excavators license issued pursuant to Chapter 4-196 of this Code, if applicable.

(B) The following persons are not general contractors within the meaning of this section:

(1) Any subcontractor, employee or agent working for or under the supervision of a general contractor licensed or required to be licensed under this chapter and acting within the scope of his contract, employment or agency;

(2) Any person who merely furnishes materials or supplies for use at a construction site without fabricating them into, or consuming them in the performance of, the work of a general contractor;

(3) Any person licensed by the City of Chicago as a mason contractor, plumbing contractor or electrical contractor and acting within the scope of his license;

(4) Any licensed architect or engineer acting within the scope of his license;

(5) Any person who does general contracting work on property that constitutes his primary residence, if the primary residence is a single-family dwelling or a multiple-family dwelling that does not exceed three stories in height and contains six or fewer dwelling units as defined in Section 13-4-010 of this Code. This exception is limited to one such property during a calendar year;

(6) Any person who hires a general contractor licensed under this chapter to do general contracting work on the person's property;

(7) Any property owner, or employee or agent thereof, who does minor nonstructural repairs on the owner's property; and

(8) A governmental entity for work upon premises owned by the governmental entity and performed by employees of the governmental entity.

4-36-030 License classifications.

General contractor licenses shall be divided into the classifications which follow. The holders of such licenses shall be entitled to engage in the business of general contractor within the city subject to the following limitations:

Class A license: The holder of a Class A license is subject to no limitation as to the value of any single contract project.

Class B license: The holder of a Class B license is not entitled to engage in the construction of any single contract project of a value in excess of $10,000,000.00.

Class C license: The holder of a Class C license is not entitled to engage in the construction of any single contract project of a value in excess of $5,000,000.00.

Class D license: The holder of a Class D license is not entitled to engage in the construction of any single contract project of a value in excess of $2,000,000.00.

Class E license: The holder of a Class E license is not entitled to engage in the construction of any single contract project of a value in excess of $500,000.00.

4-36-040 License – Posting – Nontransferability.

Each license issued pursuant to this chapter shall be posted in a conspicuous place near the entrance of the licensee's chief place of business. A photocopy of the license shall be posted in a conspicuous place at each construction site maintained by the licensee. No transfer of ownership shall be allowed on any license issued under this chapter.

4-36-050 License – Application.

An application for a license under this chapter shall be made in writing to the commissioner on a form provided by the department of buildings, and shall be accompanied by the following:

(A) If the applicant is an individual:

(1) The applicant's full name, residence address, business address, business e-mail address and business telephone number;

(2) Proof that the applicant is at least 18 years of age;

(B) If the applicant is a corporation:

(1) The corporate name, address, e-mail address and telephone number of the applicant's principal office or place of business;

(2) The date and state of incorporation;

(3) The full name, title, residence address, e-mail address and residence telephone number of all controlling persons;

(4) Proof that all corporate officers and controlling persons are at least 18 years of age;

(5) Proof that the corporation is in good standing under the laws of the State of Illinois;

(C) If the applicant is a partnership or limited liability company:

(1) The name, address, e-mail address and telephone number of the applicant's principal office or place of business;

(2) The full name, title, residence address, e-mail address and residence telephone number of all partners, if a general partnership; of all general and limited partners, if a limited partnership; of all managers, managing members and members, if a limited liability company; and of all controlling persons;

(3) Proof that all partners, managers, managing members, members and controlling persons are at least 18 years of age;

(D) The class of license for which application is being made;

(E) The license fee;

(F) A description of the work and services the applicant will provide;

(G) A statement verified by affidavit as to whether the applicant and each controlling person is financially solvent;

(H) The name and address of the principal location from which the applicant has engaged in the business of general contracting at any time within the last five years;

(I) If the applicant is not a sole proprietor, proof that the applicant is authorized to do business in the State of Illinois;

(J) Proof of insurance as required by Section 4-36-090;

(K) The date of birth, and social security number or other acceptable identifier, of each natural person named in the license application;

(L) A statement as to whether the applicant or any controlling person has ever been convicted, in custody, under parole or under any other non-custodial supervision resulting from a conviction in a court of any jurisdiction for the commission of a felony or criminal offense of whatever degree involving bribery, and if so, the details surrounding each such conviction;

(M) A statement as to whether the applicant or any controlling person is currently under indictment or has been charged under any State or Federal law with the crime of bribery; and

(N) Any other information that the commissioner may require.

It is a condition of the license that all information in the application be kept current. Any change in required information shall be reported to the department of buildings within 14 business days after such change has occurred.

For purposes of this section, a post office box shall not suffice as an address.

4-36-060 License issuance and renewal prohibited when.

No general contractor license shall be issued to the following persons:

(A) Any person whose license under this chapter has been revoked for cause at any time within the last four years;

(B) Any person whose permit privileges have been suspended pursuant to Section 4-36-130 until such time that the suspension is lifted by the department of buildings;

(C) Any person who is under the age of 18;

(D) Any person who has been convicted, in custody, under parole or under any other non-custodial supervision resulting from a conviction in a court of any jurisdiction for the commission of a felony or criminal offense of whatever degree involving bribery, unless, upon request of such person, the commissioner determines that such person has been substantially rehabilitated to warrant the public trust. The burden of proof of substantial rehabilitation shall be on the person seeking such rehabilitation; and

(E) Any person who is currently under indictment or has been charged under any State or Federal law with the crime of bribery.

The above prohibitions and requirements shall apply to the licensee and to all controlling persons.

Eligibility for issuance of a license under this chapter shall be a continuing requirement for maintaining a license under this chapter. Failure to maintain such eligibility may result in license suspension or revocation in accordance with the requirements of Section 4-4-280 of this Code.

4-36-070 License – Fee – Termination.

The license fee set forth in Section 4-5-010 of this Code shall be payable annually. The general contractor license shall expire on the date indicated on the face of the license.

4-36-080 License number to be printed where.

The licensee shall print his general contractor license number legibly on the front page of every estimate, contract and subcontract, and in any advertisement placed by or on behalf of a general contractor. The general contractor license number, and the class of general contractor license obtained, shall appear on every application for a building permit. The licensee shall affix his name and general contractor license number on all vehicles used in the course of his business.

4-36-090 Proof of insurance – Required.

Prior to the issuance of a general contractor license, each applicant shall furnish a certificate of insurance, issued by an insurer authorized to insure in Illinois with a credit rating of B+ or higher by A.M. Best Company, evidencing commercial general liability insurance, as follows:

(A) If the applicant is applying for a Class A license: limits of not less than $5,000,000.00 per occurrence (primary or umbrella) for bodily injury and property damage arising in any way from the issuance of the license;

(B) If the applicant is applying for a Class B license: limits of not less than $3,000,000.00 per occurrence (primary or umbrella) for bodily injury or property damage arising in any way from the issuance of the license;

(C) If the applicant is applying for a Class C license: limits of not less than $1,000,000.00 per occurrence, $2,000,000.00 in the aggregate combined single limit, for bodily injury or property damage arising in any way from the issuance of the license;

(D) If the applicant is applying for a Class D license: limits of not less than $1,000,000.00 per occurrence, $2,000,000.00 in the aggregate combined single limit, for bodily injury or property damage arising in any way from the issuance of the license;

(E) If the applicant is applying for a Class E license: limits of not less than $1,000,000.00 per occurrence for bodily injury or property damage arising in any way from the issuance of the license.

Each policy of insurance required under this section shall include a provision requiring 30 days advance notice to the commissioner prior to cancellation or lapse of the policy. The licensee shall maintain the insurance required under this section in full force and effect for the duration of the license period. A single violation of this section shall result in suspension or revocation of the general contractor license in accordance with Section 4-4-280 of this Code.

Each policy of insurance required under this section shall name the City of Chicago as an additional insured on a primary, noncontributory basis.

4-36-100 Reserved.

4-36-110 Unlawful acts.

It shall be unlawful for any licensee or for any person requiring a license under this chapter to engage in any of the following conduct:

(A) Knowingly to allow any person to use the licensee's name or license identification on a building permit application unless the licensee will be performing the work attributed to the licensee in the permit application. Any person who violates this subsection shall be punished by a fine of $1,000.00 for the first offense; $1,500.00 and a 90-day license suspension for the second offense; and $2,000.00 and license revocation for the third offense;

(B) To do work or to direct, permit, encourage, assist, aid, abet or cause others to do work without first having obtained any permit required by this Code, or in violation of Section 13-12-050 of this Code;

(C) To violate or to direct, permit, encourage, assist, aid, abet or cause others to violate any stop work order issued under this Code;

(D) To hire any subcontractor or to direct, permit, encourage, assist, aid, abet or cause others to hire any subcontractor who lacks a valid license to perform the work for which the subcontractor is hired;

(E) To submit any bid on general contracting work without a valid license issued under this chapter;

(F) To fail to allow the department of buildings or the department of business affairs and consumer protection to examine pursuant to Section 4-36-120(B) the financial books and records of the business within three business days of the time a written request for such an examination is made by the commissioner of buildings or the department of business affairs and consumer protection;

(G) To fail to comply with the Workers' Compensation Act, as amended;

(H) To fail to maintain any insurance required by law, including but not limited to workers' compensation insurance and automobile liability insurance;

(I) To knowingly make or cause to be made a false statement of material fact on or in connection with a building permit application;

(J) To knowingly submit or cause to be submitted in support of a building permit application any document containing false or fraudulent information;

(K) To knowingly affix or cause to be affixed a false signature on a building permit application;

(L) To bribe or attempt to bribe or cause others to bribe or attempt to bribe any building inspector, government official, city personnel or other person in connection with an act related to general contracting as defined in Section 4-36-010.

(M) To knowingly engage or cause others to engage in any conduct in connection with a building permit application in violation of the Illinois Architecture Practice Act, the Illinois Professional Land Surveyor Act, the Illinois Professional Engineering Practice Act or the Illinois Structural Engineering Act, as amended.

(N) To do work or to direct, permit, encourage, assist, aid, abet or cause others to do work in violation of the zoning code or in a manner that fails to conform to the minimum standards of health or safety set forth in this Code or in any other applicable law or that otherwise endangers the health or safety of construction site workers, or the current or eventual users or occupants of a building or premises or the general public.

(O) To fail to comply with any requirement applicable to the contractor on a project as set forth in Article XIV of Chapter 11-4 of this Code.

The prohibitions set forth in subsections (A) through (O) of this section shall apply to the licensee and to all controlling persons.

4-36-120 Duties.

A licensee under this chapter shall have the following duties:

(A) To maintain a list that includes information about all permits obtained and all contractors or subcontractors performing work on any project permitted or requiring a permit, under this Code, including the contractor's or subcontractor's name and address, and if applicable, their license number. If requested by the commissioner, the general contractor shall produce this list within 72 hours of the commissioner's request.

(B) To maintain sufficient and proper personnel, financial ability and facility to coordinate, develop, provide management expertise and complete in its entirety any proposed work for which a permit has been issued or is required to be issued under this Code. If the commissioner of buildings or the department of business affairs and consumer protection receives a complaint, or otherwise has reasonable cause to believe, that a licensee or any person requiring a license under this chapter is not financially solvent, the commissioner and the department of business affairs and consumer protection are authorized to examine that licensee's or person's financial books and records in order to determine whether the person's past and current financial solvency and expectations for financial solvency in the future give rise to a reasonable expectation that the person can successfully do business as a general contractor without jeopardizing the public health, safety or welfare, and can carry through to completion any project permitted or requiring a permit under this Code. Financial solvency is a continuing requirement for maintaining a license under this chapter. Any financial books and records submitted pursuant to this subsection, and all information contained therein, shall be deemed confidential, shall be used for purposes of enforcing this subsection only, and shall not be divulged to any person or agency, except to the United States Attorney, the Illinois Attorney General, the State's Attorney of Cook County or to the extent required by law. Any person who uses or divulges confidential information in violation of the requirements of this subsection shall be subject to incarceration for a term not to exceed six months or a fine not to exceed $500.00 or both.

(C) To assure compliance with the building code by its employees, agents and subcontractors in the performance of a project.

(D) To comply with all reasonable requests made by any authorized city official necessary or appropriate to implement the requirements of this chapter;

(E) To cooperate fully with any authorized city official in any inquiry, inspection or investigation necessary or appropriate to implement the requirements of this chapter;

(F) To keep a copy of the certificate of insurance required under Section 4-36-090 at the following locations: (1) the licensee's principal office or place of business, as identified in the license application; and (2) each construction site within the city managed or controlled by the licensee. Upon request, such copy of the certificate of insurance shall be made available for inspection by any city inspector or other authorized city official.

The duties set forth in this section shall apply to the licensee and to all controlling persons.

(G) If the licensee is engaged at a specific job site in the business of home repair, as defined in Section 4-6-280(a), to comply with the requirements set forth in paragraphs (2) through (6), inclusive, of Section 4-6-280(d) and in paragraphs (1) through (4), inclusive, of Section 4-6-280(c).

4-36-130 Permit privileges – Suspension for failure to correct defects in work.

If the commissioner of buildings determines that a licensee or any person requiring a license under this chapter has failed to correct any substantial defect, error or deficiency, or has established a pattern of deviating from the drawings or plans approved by the appropriate department issuing the permit, in any work done under the authority of a permit issued pursuant to this Code, the commissioner shall notify the licensee or person that if the noncompliance is not corrected to the satisfaction of the department within ten business days after written notification thereof, the issuance to the general contractor of any new permit for any work at any location shall be prohibited until the noncompliance is cured. If the general contractor fails to correct the noncompliance within ten business days after written notification thereof, the commissioner shall, without further notice, stop the issuance of any new permit to the general contractor until such time that the noncompliance is corrected and the correction is inspected and approved by the department.

For purposes of this section:

"Substantial defect, error or deficiency" means any construction, alteration, installation, repair or razing of any building, structure, premises or part thereof which (i) is being done or has been done without any permit required by this Code; or (ii) creates a danger to the health or safety of workers on the site, to current or eventual users or occupants of the building, structure, premises or part thereof, or to the general public.

"Pattern" means five or more uncorrected deviations from any permit at one or more construction sites within any six-month period.

4-36-140 License – Immediate suspension based upon a pattern of substantial code violations.

If the commissioner of buildings determines that a licensee is engaging in or has engaged in a pattern of substantial code violations, the commissioner may order the temporary suspension of any license issued pursuant to this chapter for a period not to exceed ten days. Notice of the temporary suspension and the grounds for that suspension shall be immediately sent or delivered to the licensee. The licensee shall have an opportunity for a hearing before the department of business affairs and consumer protection prior to the expiration of the ten day temporary suspension. If the department of business affairs and consumer protection determines by a preponderance of the evidence that a pattern of substantial code violations exists, nothing in this

section shall prevent the department of business affairs and consumer protection from suspending the licensee's general contractor license for a longer period of time or from revoking the license in accordance with Section 4-4-280 of this Code.

For purposes of this subsection, the term “pattern of substantial code violations” means five or more violations of the building code which imperil the public health, safety or welfare, or two or more violations of any stop work order issued pursuant to this Code, or any combination thereof involving five or more violations of this Code, within any six-month period, at one or more construction sites within the city managed or controlled by the licensee.

4-36-145 License suspension pending final adjudication of a bribery charge.

If the commissioner has knowledge that a licensee under this chapter or any controlling person has been indicted or charged with any offense set forth in item (L) of Section 4-36-110 or with a similar offense under any State or Federal law and the commissioner determines that continued operation of the licensed business or activity may pose a threat to the public health, safety or welfare or may threaten to impair public confidence in the licensed business or activity, the commissioner may suspend the general contractor license of such licensee, in accordance with the requirements of Section 4-4-280, until final adjudication is made with respect to such offense. The subject matter of any hearing conducted under Section 4-4-280 shall be limited to determining (1) whether the licensee or any controlling person has, in fact, been indicted or charged with any offense set forth in item (L) of Section 4-36-110 or with a similar offense under any State or Federal law; and (2) whether such offense is connected in any way with an act related to general contracting; and (3) whether continued operation of the licensed business or activity may pose a threat to the public health, safety or welfare or may threaten to impair public confidence in the licensed business or activity. The burden of proving that continued operation of the licensed business or activity does not pose a threat to the public health, safety or welfare and does not threaten to impair public confidence in the licensed business or activity shall be on the licensee.

4-36-150 License – Suspension or revocation.

Any violation of this chapter or of the building code or of any regulation promulgated thereunder may result in license suspension or revocation in accordance with the requirements Section 4-4-280 of this Code.

4-36-160 License revocation – Four-year wait for new license.

No person whose license under this chapter is revoked for any cause shall be granted another general contractor license under the same or a different name for a period of four years after the date of revocation.

4-36-170 Regulations.

The commissioner of buildings shall have the authority to promulgate rules and regulations necessary to implement the requirements of this chapter.

4-36-180 Enforcement.

The commissioner of buildings shall (i) enforce the requirements of this chapter; (ii) investigate complaints regarding violations of this chapter; and (iii) maintain a roster of all licensees under this chapter and of all persons whose general contractor license has been suspended or revoked within the previous four years.

(Added Coun. J. 10-1-03, p. 9163, § 2.1)

4-36-190 Violation – Penalty.

Except as otherwise provided in this chapter, any person violating any of the requirements of this chapter shall be fined, as follows:

(A) If the person holds or requires a Class A license under this chapter: not less than $1,000.00, nor more than $5,000.00, for each offense;

(B) If the person holds or requires a Class B license under this chapter: not less than $750.00, nor more than $3,500.00, for each offense;

(C) If the person holds or requires a Class C license under this chapter: not less than $500.00, nor more than $2,500.00, for each offense;

(D) If the person holds or requires a Class D license under this chapter: not less than $400.00, nor more than $2,000.00, for each offense;

(E) If the person holds or requires a Class E license under this chapter: not less than $250.00, nor more than $1,000.00, for each offense.

Each day that a violation continues shall constitute a separate and distinct offense.

PROPOSAL TO BE EXECUTED BY A CORPORATION

The undersigned, hereby acknowledges having received **Specification No.** 425139 containing a full set of Contract Documents, including, but not limited to, 1) Instructions to Bidders (Proposers), 2) General Conditions, 3) Special Conditions, 4) Contract Plans or Drawings (if applicable) 5) Detailed Specifications or Scope of Services, Evaluation/Selection Criteria and Submittal Requirements (If RFP/RFQ), 6) Proposal Pages, 7) Certifications and 8) Addenda Nos. **(none unless indicated here)** _____, and affirms that the corporation shall be bound by all the terms and conditions contained in the Contract Documents, regardless of whether a complete set thereof is attached to this proposal, except only to the extent that the corporation has taken express written exception thereto in the sections of this specification designated for that purpose.

Under penalty of perjury, the undersigned: (1) warrants that he/she was authorized to submit an EDS on behalf of the Disclosing Party on-line; (2) warrants that all certifications and statements contained in the EDS are true, accurate and complete as of the date the EDS was submitted on-line; and (3) further warrants that, as of the date of submission of this proposal or bid, there have been no changes in Circumstances since the date that the EDS was submitted that would render any certification in the EDS false, inaccurate or incomplete.

Further, the undersigned being duly sworn deposes and says on oath that no disclosures of ownership interests have been withheld and the information provided therein to the best of its knowledge is current and the undersigned has not entered into any agreement with any other bidder (proposer) or prospective bidder (proposer) or with any other person, firm or corporation relating to the price named in this proposal or any other proposal, nor any agreement or arrangement under which any act or omission in restraint of freedom of competition among bidders (proposers) and has not disclosed to any person, firm or corporation the terms of this bid (proposal) or the price named herein.

Proposals must be submitted with original signatures in the space provided. Proposals not properly signed will be rejected.

NAME OF CORPORATION: _____
(Print or Type)

SIGNATURE OF PRESIDENT*:
(Or Authorized Officer) _____
(Signature)

TITLE OF SIGNATORY: _____
(Print or Type)

BUSINESS ADDRESS: _____
(Print or Type)

*Note: In the event that this bid (proposal) is signed by other than the President, attach hereto a certified copy of that section of Corporate By-Laws or other authorization, such as a resolution by the Board of Directors, which permits the person to sign the offer for the Corporation.

ATTEST: _____
(Corporate Secretary Signature)
(Affix Corporate Seal)

State of _____
County of _____

This instrument was acknowledged before me on this _____ day of _____, 20___ by _____ as President (or other authorized officer) and _____ as Secretary of _____ (Corporation Name).
(Seal)

_____
Notary Public Signature
Commission Expires: _____

PROPOSAL TO BE EXECUTED BY A JOINT VENTURE

The undersigned, hereby acknowledges having received **Specification No.** 425139 containing a full set of Contract Documents, including, but not limited to, 1) Instructions to Bidders (Proposers), 2) General Conditions, 3) Special Conditions, 4) Contract Plans or Drawings (if applicable) 5) Detailed Specifications or Scope of Services, Evaluation/Selection Criteria and Submittal Requirements (If RFP/RFQ), 6) Proposal Pages, 7) Certifications and 8) Addenda Nos. **(none unless indicated here)** _____, and affirms that the Joint Venture shall be bound by all the terms and conditions contained in the Contract Documents, regardless of whether a complete set thereof is attached to this proposal, except only to the extent that the Joint Venture has taken express written exception thereto in the sections of this specification designated for that purpose.

Under penalty of perjury, the undersigned: (1) warrants that he/she was authorized to submit an EDS on behalf of the Disclosing Party on-line; (2) warrants that all certifications and statements contained in the EDS are true, accurate and complete as of the date the EDS was submitted on-line; and (3) further warrants that, as of the date of submission of this proposal or bid, there have been no changes in Circumstances since the date that the EDS was submitted that would render any certification in the EDS false, inaccurate or incomplete.

Further, the undersigned being duly sworn deposes and says on oath that no disclosures of ownership interests have been withheld and the information provided therein to the best of its knowledge is current and the undersigned has not entered into any agreement with any other bidder (proposer) or prospective bidder (proposer) or with any other person, firm or corporation relating to the price named in this proposal or any other proposal, nor any agreement or arrangement under which any act or omission in restraining of free competition among bidders (proposers) and has not disclosed to any person, firm or corporation the terms of this bid (proposal) or the price named herein.

Proposals must be submitted with original signatures in the space provided. Proposals not properly signed will be rejected.

JOINT VENTURE NAME: _____
(Print or Type)

JOINT VENTURE ADDRESS: _____
(Print or Type)

If you are operating under an assumed name, provide County registration number herein under as provided in the Illinois Revised Statutes 1965 Chapter 96 Sec. 4 et seq.
Registration Number: _____
SIGNATURES AND ADDRESSES OF ALL MEMBERS OF THE JOINT VENTURE
(If all members of the Joint Venture do not sign, indicate authority of signatories by attaching copy of Joint Venture agreement or other authorizing document):
SIGNATURE OF Authorized Party: _____
(Signature)
TITLE OF SIGNATORY: _____
(Print or Type)

BUSINESS ADDRESS: _____
(Print or Type)
ATTEST: _____
(Joint Venture Secretary Signature)
(Affix Joint Venture Seal)

OR
Joint Venturer Signature: _____
(Signature)
Address: _____
(Print or Type)
Joint Venturer Signature: _____
(Signature)
Address: _____
(Print or Type)
Joint Venturer Signature: _____
(Signature)
Address: _____

(Print or Type)

State of _____
County of _____

This instrument was acknowledged before me on this _____ day of _____, 20___ by _____ as President (or other authorized officer) and _____ as Secretary of _____ (Corporation Name).
(Seal)

_____
Notary Public Signature
Commission Expires: _____

PROPOSAL TO BE EXECUTED BY A PARTNERSHIP

The undersigned, hereby acknowledges having received **Specification No.** 425139 containing a full set of Contract Documents, including, but not limited to, 1) Instructions to Bidders (Proposers), 2) General Conditions, 3) Special Conditions, 4) Contract Plans or Drawings (if applicable) 5) Detailed Specifications or Scope of Services, Evaluation/Selection Criteria and Submittal Requirements (If RFP/RFQ), 6) Proposal Pages, 7) Certifications and 8) Addenda Nos. **(none unless indicated here)** _____, and affirms that the partnership shall be bound by all the terms and conditions contained in the Contract Documents, regardless of whether a complete set thereof is attached to this proposal, except only to the extent that the partnership has taken express written exception thereto in the sections of this specification designated for that purpose.

Under penalty of perjury, the undersigned: (1) warrants that he/she was authorized to submit an EDS on behalf of the Disclosing Party on-line; (2) warrants that all certifications and statements contained in the EDS are true, accurate and complete as of the date the EDS was submitted on-line; and (3) further warrants that, as of the date of submission of this proposal or bid, there have been no changes in Circumstances since the date that the EDS was submitted that would render any certification in the EDS false, inaccurate or incomplete.

Further, the undersigned being duly sworn deposes and says on oath that no disclosures of ownership interests have been withheld and the information provided therein to the best of its knowledge is current and the undersigned has not entered into any agreement with any other bidder (proposer) or prospective bidder (proposer) or with any other person, firm or corporation relating to the price named in this proposal or any other proposal, nor any agreement or arrangement under which any act or omission in restraining of free competition among bidders (proposers) and has not disclosed to any person, firm or corporation the terms of this bid (proposal) or the price named herein.

Proposals must be submitted with original signatures in the space provided. Proposals not properly signed will be rejected.

BUSINESS NAME: _____
(Print or Type)

BUSINESS ADDRESS: _____
(Print or Type)

If you are operating under an assumed name, provide County registration number herein under as provided in the Illinois Revised Statutes 1965 Chapter 96 Sec. 4 et seq.

Registration Number: _____

SIGNATURES AND ADDRESSES OF ALL MEMBERS OF THE PARTNERSHIP
(If all General Partners do not sign, indicate authority of partner signatories by attaching copy of partnership agreement or other authorizing document):

Partner Signature: _____
(Signature)
Address: _____
(Print or Type)

Partner Signature: _____
(Signature)
Address: _____
(Print or Type)

Partner Signature: _____
(Signature)
Address: _____
(Print or Type)

State of _____
County of _____

This instrument was acknowledged before me on this _____ day of _____, 20___ by _____ as President (or other authorized officer) and _____ as Secretary of _____ (Corporation Name).
(Seal)

_____
Notary Public Signature
Commision Expires: _____

PROPOSAL TO BE EXECUTED BY A SOLE PROPRIETOR

The undersigned, hereby acknowledges having received **Specification No.** 425139 containing a full set of Contract Documents, including, but not limited to, 1) Instructions to Bidders (Proposers), 2) General Conditions, 3) Special Conditions, 4) Contract Plans or Drawings (if applicable) 5) Detailed Specifications or Scope of Services, Evaluation/Selection Criteria and Submittal Requirements (If RFP/RFQ), 6) Proposal Pages, 7) Certifications and 8) Addenda Nos. **(none unless indicated here)** _____, and affirms that the sole proprietor shall be bound by all the terms and conditions contained in the Contract Documents, regardless of whether a complete set thereof is attached to this proposal, except only to the extent that the sole proprietor has taken express written exception thereto in the sections of this specification designated for that purpose.

Under penalty of perjury, the undersigned: (1) warrants that he/she was authorized to submit an EDS on behalf of the Disclosing Party on-line; (2) warrants that all certifications and statements contained in the EDS are true, accurate and complete as of the date the EDS was submitted on-line; and (3) further warrants that, as of the date of submission of this proposal or bid, there have been no changes in Circumstances since the date that the EDS was submitted that would render any certification in the EDS false, inaccurate or incomplete.

Further, the undersigned being duly sworn deposes and says on oath that no disclosures of ownership interests have been withheld and the information provided therein to the best of its knowledge is current and the undersigned has not entered into any agreement with any other bidder (proposer) or prospective bidder (proposer) or with any other person, firm or corporation relating to the price named in this proposal or any other proposal, nor any agreement or arrangement under which any act or omission in restraining of free competition among bidders (proposers) and has not disclosed to any person, firm or corporation the terms of this bid (proposal) or the price named herein.

Proposals must be submitted with original signatures in the space provided. Proposals not properly signed will be rejected.

SIGNATURE OF PROPRIETOR: _____
(Signature)

DOING BUSINESS AS: _____
(Print or Type)

Business Address: _____
(Print or Type)

If you are operating under an assumed name, provide County registration number herein under as provided in the Illinois Revised Statutes 1965 Chapter 96 Sec. 4 et seq.

Registration Number: _____
(Print or Type)

State of _____
County of _____

This instrument was acknowledged before me on this _____ day of _____, 20___ by _____ as President (or other authorized officer) and _____ as Secretary of _____ (Corporation Name).
(Seal)

_____
Notary Public Signature
Commission Expires: _____

PROPOSAL ACCEPTANCE

Contract No.: _____

Specification No.: _____

Vendor Name: _____

Total Amount (Value): _____

Fund Chargeable: _____

The undersigned, on behalf of the CITY OF CHICAGO, a municipal corporation of the State of Illinois, hereby accept the foregoing bid items as identified in the proposal.

CITY OF CHICAGO

_____

Mayor Date

_____

Comptroller Date

_____

Chief Procurement Officer Date

AFFIDAVIT OF AVAILABILITY
For the Letting of

Instructions: Complete this form by either typing or using black ink. "Authorization to Bid" will not be issued unless both sides of this form are completed in detail. Use additional forms as needed to list all work.

Part I. Work Under Contract

List below all work you have under contract as either a prime contractor or a subcontractor. It is required to include all pending low bids not yet awarded or rejected. In a joint venture, list only that portion of the work which is the responsibility of your company. The uncompleted dollar value is to be based upon the most recent engineer's or owners estimate, and must include work subcontracted to others. If no work is contracted, show N**ONE.**

	1	2	3	4	Awards Pending	
County and Section Number						
Contract With						
Estimated Completion Date						
Total Contract Price						Accumulated Totals
Uncompleted Dollar Value if Firm is the Prime Contractor						
Uncompleted Dollar Value if Firm is the Subcontractor						
				Total Value of All Work		

Part II. Awards Pending and Uncompleted Work to be done with your own forces.

List below the uncompleted dollar value of work for each contract and awards pending to be completed with your own forces. All work subcontracted to others will be listed on the reverse of this form. In a joint venture, list only that portion of the work to be done by your company. If no work is contracted, show NONE.

						Accumulated Totals
Earthwork						
Portland Cement Concrete Paving						
Bituminous Plant Mix						
Bituminous Aggregate Mixture						
Miscellaneous Bituminous Paving						
Clean & Seal Cracks/Joints						
Aggregate Bases & Surfaces						
Highway, R.R. and Waterway Structures						
Drainage						
Electrical						
Cover and Seal Coats						
Miscellaneous Concrete Construction						
Landscaping						
Fencing						
Guardrail						
Painting						
Signing						
Fabrication						

Affidavit of Availability

Building Construction						
Other Construction (List)						
Totals						

Disclosure of this information is **REQUIRED** to accomplish the statutory purpose as outlined in the "Illinois Procurement Code". Failure to comply will result in non-issuance of an "Authorization To Bid." This form has been approved by the State Forms Management Center.

Part III. Work Subcontracted to Others.

For each contract described in Part I, list all the work you have subcontracted to others.

	1	2	3	4	Awards Pending
Subcontractor					
Type of Work					
Subcontract Price					
Amount Uncompleted					
Subcontractor					
Type of Work					
Subcontract Price					
Amount Uncompleted					
Subcontractor					
Type of Work					
Subcontract Price					
Amount Uncompleted					
Subcontractor					
Type of Work					
Subcontract Price					
Amount Uncompleted					
Subcontractor					
Type of Work					
Subcontract Price					
Amount Uncompleted					
Total Uncompleted					

Affidavit of Availability

I, being duly worn, do hereby declare that this affidavit is a true and correct statement relating to ALL uncompleted contracts of the undersigned for Federal, State, County, City and private work, including ALL subcontract work, ALL pending low bids not yet awarded or rejected and ALL estimated completion dates.

Subscribed and sworn to before me
this _____ day of _____ _____

_____
Notary Public

My commission expires _____

(Notary Seal)

Type or Print Name _____
Officer or Director Title

Signed _____

Company _____

Address _____

_____

SCHEDULE B: AFFIDAVIT OF DBE/NON-DBE JOINT VENTURE
(FTA, FHWA and FAA Funded Contracts)

Note: If all joint venturers are DBEs, a written joint venture agreement between the DBE venturers may be submitted in lieu of this form. In all proposed joint ventures, each DBE venturer must submit a copy of its current Letter of Certification.

ALL INFORMATION REQUESTED BY THIS SCHEDULE MUST BE ANSWERED IN THE SPACES PROVIDED. DO NOT REFER TO YOUR JOINT VENTURE AGREEMENT EXCEPT TO EXPAND ON ANSWERS PROVIDED ON THIS FORM. IF ADDITIONAL SPACE IS REQUIRED, ADDITIONAL SHEETS MAY BE ATTACHED.

I. Name of joint venture: _____
Address of joint venture: _____
_____
Phone number of joint venture: _____

II. Identify each non-DBE venturer(s):
Name of Firm: _____
Address: _____
_____
Phone: _____
Contact person for matters concerning DBE compliance: _____

III. Identify each DBE venturer(s):_____
Name of Firm_____
Address: _____
_____
Phone: _____
Contact person for matters concerning DBE compliance: _____

IV. Describe the role(s) of the DBE venturer(s) in the joint venture:
_____
_____
_____
_____

V. Attach a copy of the joint venture agreement. In order to demonstrate the DBE venturer□s share in the ownership, control, management responsibilities, risks and profits of the joint venture, the proposed joint venture agreement must include specific details related to: (1) the contributions of capital and equipment; (2) work items to be performed by the DBE□s own forces; (3) work items to be performed under the supervision of the DBE venturer; and (4) the commitment of management, supervisory and operative personnel employed by the DBE to be dedicated to the performance of the project.

VI. Ownership of the Joint Venture.

A. What are the percentage(s) of DBE ownership of the joint venture?
DBE ownership percentage(s) _____
Non-DBE ownership percentage(s) _____

Schedule B

B. Specify DBE percentages for each of the following (provide narrative descriptions and other details as applicable):

1. Profit and loss sharing: _____
2. Capital contributions:
   (a) Dollar amounts of initial contribution: _____
   (b) Dollar amounts of anticipated on-going contributions: _____

3. Contributions of equipment (specify types and quantities of equipment to be provided by each venturer): _____

4. Other applicable ownership interests, including ownership options or other agreements which restrict or limit ownership and/or control: _____

5. Provide copies of all written agreements between venturers concerning this project.

6. Identify each current City of Chicago contract (and each contract completed during the past two (2) years) by a joint venture of two or more firms participating in this joint venture:

VII. Control of and Participation in the Joint Venture. Identify by name and firm those individuals who are, or will be, responsible for, and have the authority to engage in the following management functions and policy decisions. (indicate any limitations to their authority such as dollar limits and co-signatory requirements.):

A. Joint venture check signing:

B. Authority to enter contracts on behalf of the joint venture:

C. Signing, co-signing and/or collateralizing loans:

D. Acquisition of lines of credit:

E. Acquisition and indemnification of payment and performance bonds:

_____

_____

_____

F. Negotiating and signing labor agreements:

_____

_____

_____

G. Management of contract performance. (identify by name and firm only):
   1. Supervision of field operations: _____
   2. Major purchases: _____
   3. Estimating: _____
   4. Engineering: _____

VIII. Financial Controls of joint venture:

A. Which firm and/or individual will be responsible for keeping the books of account?

_____

B. Identify the "managing partner," if any, and describe the means and measure of their compensation:

_____

_____

_____

C. What authority does each venturer have to commit or obligate the other to insurance and bonding companies, financing institutions, suppliers, subcontractors, and/or other parties participating in the performance of this contract or the work of this project?

_____

_____

_____

IX. State the approximate number of operative personnel (by trade) needed to perform the joint venture□s work under this contract. Indicate whether they will be employees of the non-DBE firm, the DBE firm, or the joint venture.

Trade	Non-DBE Firm (number of employees)	DBE (number of employees)	Joint Venture (number of employees)

DBE Construction Rev. 6/8/01 (dlh)

Schedule B

Note: If any personnel proposed for this project will be employees of the joint venture:

A. Are any proposed joint venture employees currently employed by either venturer?

Currently employed by non-DBE (number) _____
Currently employed by DBE _____

B. Identify by name and firm the individual who will be responsible for hiring joint venture employees:

_____

C. Which venturer will be responsible for the preparation of joint venture payrolls:

_____

XI. Please state any material facts of additional information pertinent to the control and structure of this joint venture.

_____
_____
_____
_____
_____
_____
_____
_____
_____
_____
_____
_____
_____
_____
_____
_____
_____
_____
_____
_____

The undersigned affirms that the foregoing statements are correct and include all material information necessary to identify and explain the terms and operations of our joint venture and the intended participation of each venturer in the undertaking. Further, the undersigned covenant and agree to provide to the City current, complete and accurate information regarding actual joint venture work and the payment therefore, and any proposed changes in any provision of the joint venture agreement, and to permit the audit and examination of the books, records and files of the joint venture, or those of each venturer relevant to the joint venture by authorized representatives of the City or the Federal funding agency.

Any material misrepresentation will be grounds for terminating any contract which may be awarded and for initiating action under federal or state laws concerning false statements.

Schedule B

Note: If there are any changes in the information submitted after filing this Schedule B and before the completion of the joint venture's work on the project, the joint venture must inform the City of Chicago, either directly or through the prime contractor if the joint venture is a subcontractor.

Name of DBE Partner Firm	Name of Non-DBE Partner Firm
Signature of Affiant	Signature of Affiant
Name and Title of Affiant	Name and Title of Affiant
Date	Date

On this _____ day of _____ , 20 ____, the above-signed officers

_____,
(names of affiants)
personally appeared and, known to me to be the persons described in the foregoing Affidavit, acknowledged that they executed the same in the capacity therein stated and for the purpose therein contained.

IN WITNESS WHEREOF, I hereunto set my hand and official seal.

Signature of Notary Public

My Commission Expire: _____

(SEAL)

SCHEDULE C: LETTER OF INTENT FROM DBE TO PERFORM AS SUBCONTRACTOR, SUPPLIER AND/OR CONSULTANT

Name of Project/Contract:_____
Department Project Number:_____
Specification Number:_____

From:_____

(Name of DBE Firm)

To:_____and the City of Chicago:

(Name of Prime Contractor)

The DBE status of the undersigned is confirmed by the attached **Letter of Certification** from the **City of Chicago** dated_____(or letter of certification from the Illinois Department of Transportation dated _____). If proposing to perform as a DBE/non-DBE Joint Venture, then Letter of Certification from DBE venturer is attached along with completed Schedule B and joint venture agreement.

The undersigned is prepared to provide the following described services or supply the following described goods in connection with the above named project/contract:

Pay Item No. / Description	Quantity / Unit Price	Total

Sub (or Grand) Total: $_____

Partial Pay Items: (If any of the above items are partial pay items, specifically describe the work and subcontract dollar amount):

_____
_____
_____
_____
_____
_____

Grand Total: $_____

If more space is needed to fully describe the DBE firm's (or DBE/non-DBE joint venturer∗s) proposed scope of work and/or payment schedule, attach additional sheets.

DBE Construction Rev. 6/8/01 (dlh)

Schedule C

SUB-SUBCONTRACTING LEVELS

_____ % of the dollar value of the DBE's subcontract that will be sublet to non-DBE contractors.

_____ % of the dollar value of the DBE's subcontract that will be sublet to DBE contractors.

NOTICE: IF DBE WILL NOT BE SUB-SUBCONTRACTING ANY OF THE WORK DESCRIBED IN THIS SCHEDULE, A ZERO (0) MUST BE SHOWN IN EACH BLANK SPACE ABOVE.

NOTICE: IF MORE THAN TEN PERCENT (10%) OF THE VALUE OF THE DBE∗s SCOPE OF WORK WILL BE SUBLET, A BRIEF EXPLANATION AND DESCRIPTION OF THE WORK TO BE SUBLET MUST BE ATTACHED TO THIS SCHEDULE.

Conditioned upon your execution of a contract with the City of Chicago, the undersigned will enter into a formal written agreement for the above described work with your firm as a Prime Contractor, and will do so within (3) three working days of your receipt of a signed contract from the City of Chicago.

NOTICE: THIS SCHEDULE (AND ALL ACCOMPANYING ATTACHMENTS) MUST BE SUBMITTED WITH ORIGINAL SIGNATURES.

_____
(Signature of Owner, President or Authorized Agent of DBE)

_____
Name /Title (Print)

_____
Date

_____
Phone

If proposing to perform as a DBE/non-DBE Joint Venture:

_____
(Signature of Owner, President or Authorized Agent of non-DBE)

_____
Name /Title (Print)

_____
Date

_____
Phone

DBE Construction Rev. 6/8/01 (dlh)

SCHEDULE D: AFFIDAVIT OF PRIME CONTRACTOR
Regarding Disadvantaged Business Enterprises (DBEs)
(FTA and FHWA Funded Projects)

Project Name:_____
Department Project No:_____
Specification No:_____

State of _____)

County (City) of_____)

In connection with the above captioned contract, I HEREBY DECLARE AND AFFIRM that I am the _____ and duly authorized representative of _____
(Title of Affiant) (Name of Prime Contractor)
and that I have personally reviewed the material and facts set forth in and submitted with the attached Schedules of Disadvantaged Business Enterprises (DBE), Schedule C's and Schedule B's (if applicable) and Schedule F, being such information.

Names of DBE Firms	Type of Work to be Performed (in accordance with Schedule C's)	Credit Toward DBE Goal
		$
		$
		$
		$
		$
		$
		$
		$
		$
		$
		$
		$

Total DBE Credit:$_____

Schedule D

To the best of my knowledge, information and belief the facts and representations contained in the afformentioned attached Schedules are true, and no material facts have been omitted.

The undersigned will enter into formal written agreements with all listed DBE firms for work as indicated in this Schedule D and accompanying Schedules, and will enter into such agreements within five (5) business days after receipt of the contract executed by the City of Chicago. Copies of each signed subcontract, purchase order, or other agreement will be submitted to the Department of Procurement Services so as to assure receipt within ten (10) business days after Award.

The Prime Contractor designates the following person as its DBE Liaison Officer:

_____

(Name- Please Print or Type) (Phone)

I DO SOLEMNLY DECLARE AND AFFIRM UNDER PENALTIES OF PERJURY THAT THE CONTENTS OF THE FOREGOING DOCUMENT ARE TRUE AND CORRECT, AND THAT I AM AUTHORIZED ON BEHALF OF THE PRIME CONTRACTOR TO MAKE THIS AFFIDAVIT.

_____
(Name of Prime Contractor -Print or Type)

_____
(Signature)

_____
(Name of Affiant)

_____
(Date)

On this _____ day of _____, 20___,
the above signed officer, _____,
(Name of Affiant)

personally appeared and, known by me to be the person described in the foregoing Affidavit, acknowledged that (s)he executed the same in the capacity stated therein and for the purposes therein contained.

IN WITNESS WHEREOF, I hereunto set my hand and seal.

_____
Notary Public Signature

Seal

Commission Expires:_____

DBE Construction Rev. 6/8/01 (dlh)

SCHEDULE F: REPORT OF SUBCONTRACTOR SOLICITATIONS
FHWA, FTA and FAA Funded Contracts

Project Name:_____
Specification #: _____

I,_____on behalf of_____
(Name of reporter) (Prime contractor)
have either personally solicited, or permitted a duly authorized representative of this firm to solicit, work for this contract from the following subcontractors which comprise all DBE and non-DBE subcontractors who bid or quoted price information on this contract:

Name of Subcontractor_____
Address of Subcontractor_____
Contact Person _____
Status: DBE Certified? _____Yes No
Type of Work Solicited_____
Years in Business (if available)_____
Annual Gross Receipts (if available) _____

Name of Subcontractor_____
Address of Subcontractor_____
Contact Person _____
Status: DBE Certified? _____Yes No
Type of Work Solicited_____
Years in Business (if available)_____
Annual Gross Receipts (if available) _____

Name of Subcontractor_____
Address of Subcontractor_____
Contact Person _____
Status: DBE Certified? _____Yes No
Type of Work Solicited_____
Years in Business (if available)_____
Annual Gross Receipts (if available) _____

Name of Subcontractor_____
Address of Subcontractor_____
Contact Person _____
Status: DBE Certified? _____Yes No
Type of Work Solicited_____
Years in Business (if available)_____
Annual Gross Receipts (if available) _____

Name of Subcontractor_____
Address of Subcontractor_____
Contact Person _____
Status: DBE Certified? _____Yes No
Type of Work Solicited_____
Years in Business (if available)_____
Annual Gross Receipts (if available) _____

(dlh) (Rev. 6/8/01)

STATUS REPORT OF DBE CONTRACT PAYMENTS
(FTA & FHWA Contracts)

Specification No.: _____
Department Project No.: _____
Date: _____
Voucher No.: _____

STATE OF: _____)

COUNTY (CITY) OF: _____)

In connection with the above-captioned contract:

I HEREBY DECLARE AND AFFIRM that I am the _____
(Title – Print or Type)

and duly authorized representative of _____
(Name of Company - Print or Type)

_____ (_____)_____
(Address of Company) (Phone)

and that the following Disadvantaged Enterprises (DBEs) have been contracted with, and have furnished, or are furnishing and preparing materials for, and have done or are doing labor on the above referenced project; that there is due and to become due them, respectively the amounts set opposite their names for material or labor as stated; and that this a full, true and complete statement of all such DBEs and of the amounts paid, due, and to become due to them:

DBE NAME	GOODS/SERVICES PROVIDED	AMOUNT OF CONTRACT	AMOUNT PAID TO DATE
		$	$
		$	$
		$	$
		$	$
		$	$
		$	$

TOTAL AMOUNT PAID TO DBEs TO DATE: $_____

(Revised November 27, 2000)

Status Report of DBE (Sub) Contract Payments

I DO SOLEMNLY DECLARE AND AFFIRM UNDER THE PENALTIES OF PERJURY THAT THE CONTENTS OF THE FOREGOING DOCUMENT ARE TRUE AND CORRECT, AND THAT I AM AUTHORIZED, ON BEHALF OF THE CONTRACTOR, TO MAKE THIS AFFIDAVIT.

Name of Contractor: _____
(Print or Type)

Signature: _____

Name of Affiant: _____

Date: _____
(Print or Type)

State of _____
County (City) of _____

This instrument was acknowledged before me on _____ (date)
by _____(name/s of person/s)
as _____ (type of authority, e.g., officer, trustee, etc.)
of _____ (name of party on behalf of whom instrument
was executed).

_____
Signature of Notary Public

(Seal)

(Revised November 27, 2000)

INSTRUCTIONS FOR COMPLETING ECONOMIC DISCLOSURE STATEMENT AND AFFIDAVIT (EDS) ON-LINE

The Bidder shall complete an online EDS prior to the bid due date. A Bidder who does not file an electronic EDS prior to the bid due date may be found non-responsive and its bid rejected. If you are unable to complete the online EDS and print a Certificate of Filing prior to the response due date, the City will accept a paper EDS provided written justification is provided explaining the Bidders good faith efforts to complete it before the response due date and the reasons why it could not be completed.

1.1. *ONLINE EDS FILING REQUIRED PRIOR TO BID OPENING*

The Bidder must complete an online EDS prior to the bid opening date.

A Bidder that does not file an electronic EDS prior to the bid opening will be found non-responsive and its bid will be rejected unless a paper EDS and written justification is submitted with the bid as explained in the above paragraph).

1.2. *ONLINE EDS WEB LINK*

The web link for the Online EDS is https://webapps.cityofchicago.org/EDSWeb

1.3. *ONLINE EDS NUMBER*

Upon completion of the online EDS submission process, the Proposer will be provided an EDS number. Bidders should provide this number here:

EDS Number: _____

1.4. *ONLINE EDS CERTIFICATION OF FILING*

Upon completion of the online submission process, the Proposer will be able to print a hard copy Certificate of Filing. The Proposer should submit the signed Certificate of Filing with its bid. Please insert your Certification of Filing following this page.

A Proposer that does not include a signed Certificate of Filing with its bid must provide it upon the request of the Chief Procurement Officer.

1.5. *PREPARATION CHECKLIST FOR REGISTRATION*

To expedite and ease your registration process, we recommend that you collect the following information prior to registering for an Online EDS user account:

	1. Invitation number, if you were provided an invitation number.
	2. EDS document from previous years, if available.
	3. Email address to correspond with the Online EDS system.
	4. Company Information:

	a. Legal Name
	b. FEIN/SSN
	c. City of Chicago Vendor Number, if available.
	d. Address and phone number information that you would like to appear on your EDS documents.
	e. EDS Captain. Check for an EDS Captain in your company - this maybe the person that usually submits EDS for your company, or the first person that registers for your company.

1.6. *PREPARATION CHECKLIST FOR EDS SUBMISSION*

To expedite and ease your EDS submission, we recommend that you collect the following information prior to updating your EDS information online.

Items #1 through #7 are needed for both EDS information updates and contract related EDS documents:

_____ 1. Invitation number, if you were provided with an invitation number.

_____ 2. Site address that is specific to this EDS.

_____ 3. Contact that is responsible for this EDS.

_____ 4. EDS document from previous years, if available.

_____ 5. Ownership structure, and if applicable, owners' company information:

_____ a. % of ownership

_____ b. Legal Name

_____ c. FEIN/SSN

_____ d. City of Chicago Vendor Number, if available.

_____ e. Address

_____ 6. List of directors, officers, titleholders, etc. (if applicable).

_____ 7. For partnerships/LLC/LLP/Joint ventures, etc.:

_____ a. List of controlling parties (if applicable).

Items #8 and #9 are needed ONLY for contract related EDS documents:

_____ 8. Contract related information (if applicable):

_____ a. City of Chicago contract package

_____ b. Cover page of City of Chicago bid/solicitation package

_____ c. If EDS is related to a mod, then cover page of your current contract with the City.

_____ 9. List of subcontractors and retained parties:

_____ a. Name

_____ b. Address

_____

_____ c. Fees – Estimated or paid

1.7. *EDS FREQUENTLY ASKED QUESTIONS*

Q: Where do I file?

A: The web link for the Online EDS is https://webapps.cityofchicago.org/EDSWeb

Q: How do I get help?

A: If there is a question mark on a page or next to a field, click on the question mark for help filling out the page or field. You may also consult the User Manual and the Training Videos available on the left menu.

Q: Why do I have to submit an EDS?

A: The Economic Disclosure Statement (EDS) is required of applicants making an application to the City for action requiring City Council, City department or other City agency approval. For example, all bidders seeking a City contract are required to submit an EDS. Through the EDS, applicants make disclosures required by State law and City ordinances and certify compliance with various laws and ordinances. An EDS is also required of certain parties related to the applicant, such as owners and controlling parties.

Q: Who is the Applicant?

A: "Applicant" means any entity or person making an application to the City for action requiring City Council or other City agency approval. The applicant does not include owners and parent companies.

Q: Who is the Disclosing Party?

A: "Disclosing Party" means any entity or person submitting an EDS. This includes owners and parent companies.

Q: What is an entity or legal entity?

A: "Entity' or 'Legal Entity" means a legal entity (for example, a corporation, partnership, joint venture, limited liability company or trust).

Q: What is a person for purposes of the EDS?

A: "Person" means a human being.

Q: Who must submit an EDS?

A. An EDS must be submitted in any of the following three circumstances:

Applicants:	An Applicant must always file this EDS. If the Applicant is a legal entity, state the full name of that legal entity. If the Applicant is a person acting on his/her own behalf, state his/her name.

Entities holding an interest:	Whenever a legal entity has a beneficial interest (E. G. direct or indirect ownership) of more than 7.5% in the Applicant, each such legal entity must file an EDS on its own behalf.
Controlling entities:	Whenever a Disclosing Party is a general partnership, limited partnership, limited liability company, limited liability partnership or joint venture that has a general partner, managing member, manager or other entity that can control the day-to-day management of the Disclosing Party, that entity must also file an EDS on its own behalf. Each entity with a beneficial interest of more than 7.5% in the controlling entity must also file an EDS on its own behalf.

Q: What information is needed to submit an EDS?

A: The information contained in the Preparation Checklist for EDS submission.

Q: I don't have a user ID & password. Can I still submit an Online EDS?

A: No. You must register and create a user ID and password before submitting an Online EDS.

Q: What information is needed to request a user ID & password for Online EDS?

A: The information contained in the Preparation Checklist for Registration is needed to request a login for the Online EDS.

Q: I already have a username and password from another City web site (City Web Portal, Department of Construction and Permits, Department of Consumer Services, etc.). Can I log-in the Online EDS with that account?

A: Usually not. The Online EDS uses a user ID and password system that is shared by the Public Vehicle Advertising and Water Payment web sites. You may use a username and password from those sites by answering "Yes" to "Is this an existing City of Chicago user ID?" when registering. Other usernames and passwords will not be automatically recognized. However, you may choose to create an identical username for the Online EDS if it is not already taken.

Q: I don't have an email address. How do I submit an Online EDS?

A: You cannot get an account to submit an online EDS without an email address. If you need an e-mail address, we suggest that you use a free internet email provider such as www.hotmail.com or www.yahoo.com or gmail.com to open an account. The City does not endorse any particular free internet email provider. Public computers are available at all Chicago Public Library branches.

Q: I forgot my user ID. Can I register again?

A: No. If you are the EDS Captain of your organization, please contact the Department of Procurement Services at 312-744-4900. If you are an EDS team member, contact your EDS Captain, who can look up your user ID.

Q: Who is the EDS Captain?

A: The EDS Captain is a person who performs certain administrative functions for an organization which files an EDS.

Each organization registered with the Online EDS has at least one EDS Captain. There may be co-captains, who are all equal. EDS Captains approve new users, change contact information for an organization, and de-active accounts of employees who have left the organization. Please see the User Manual for more information.

Q: Why do we need EDS Captains?

A: The Online EDS is designed to be a self-service web application which allows those doing or seeking to do business with the City to perform as many routine functions as possible without City intervention. Because many organizations have multiple staff filing an EDS, the EDS Captain role allows those organizations to self-manage the contact information and users.

Q: Who is the EDS team?

A: The EDS team for an organization is everyone who is registered to file an EDS on behalf of the organization.

Q: I forgot my password. What should I do?

A: To retrieve a temporary password, click the "Forgot your password?" link on the login page. Enter your user ID that you provided when you registered your account. The system will automatically generate a temporary password and send it to you. When you log-in with your temporary password, you will be asked to create a new password.

Q: How do I complete an Online EDS?

A: Click on "Create New" after logging in. The Online EDS system will walk you through the EDS questions. Please see the User Manual for details.

Q: How do I fill out a Disclosure of Retained Parties?

A: There is no longer a separate Disclosure of Retained Parties filing. After logging in, click on "Create New". Answer (click) "Contract" to "Is this EDS for a contract or an EDS information update?" Click "Fill out EDS", and click on the "Retained Parties" tab. When finished, click on "Ready to Submit."

Q: How do I attach documents?

A: Attachments are discouraged. If at all possible, please provide a concise explanation in the space provided in the online form. Attachments with pages of officers are not acceptable. Names of officers must be typed into the system. If you must provide an attachment for another reason, please send it to your City of Chicago contact (contract administrator or negotiator for procurements) and they will attach it for you. Documents can be sent in PDF (preferred), Word, or paper format.

Q: Who can complete an Economic Disclosure Statement online?

A: Any authorized representative of your business with a user ID and password can complete your EDS online. One person, such as an assistant, can fill in the information and save it, and another person can review and electronically sign the Online EDS.

Q: What are the benefits of filing my Economic Disclosure statement electronically?

A: Filing electronically reduces the chance of filing an incomplete EDS and speeds up the processing of contract awards. A certificate of filing can be printed at the completion of the process and inserted into your bid package. The biggest benefit for those who frequently do business with the City is that after the first EDS, each EDS is much easier to fill out

because non-contract specific information is pre-filled from the last submitted EDS.

Q: Will my information be secure?

A: Yes. When making your internet connection to our Web Server, you will connect through a Secure Socket Layer (SSL for short) to the "Online EDS" login page. All information you type will be protected using strong encryption. Within the login page, you will provide us with a user ID, password, and secret question for user authentication, only you will have knowledge of this unique identification information.

Q: I am filing electronically. How do I sign my EDS?

A: Once you have completed the EDS, you will be prompted to enter your password and answer to your secret question. Together, these will serve as your electronic signature. Although you will also print and physically sign an EDS certification of filing as a notice that your EDS was filed, your EDS is complete as a legal document with only the electronic filing.

Q: My address has changed. How can I update my information?

A: You must be an EDS Captain for your organization to update this. Log-in and click on "Vendor Admin, Site Administration." Select the appropriate site and click edit.

Q: I have more questions. How can I contact the Department of Procurement Services?

A: Please contact the contract administrator or negotiator assigned to your solicitation or contract. You may call DPS at 312-744-4900 between 8:30 AM and 5:00 PM Central Time.

Q: Can I save a partially complete EDS?

A: Yes. Click "Save". To avoid data loss, we recommend you save your work periodically while filling out your EDS.

Q: Do I have to re-type my information each time I submit an EDS?

A: No. The system will remember non-contract specific information from your last submitted EDS for one year. This information will be filled-in for you in your new EDS. You will have an opportunity to correct it if it has changed since your last filing. When you submit your new EDS, the information is saved and the one-year clock begins running anew.

Q: What are the system requirements to use the Online EDS?

A: The following are minimum requirements to use the Online EDS:

- A PDF viewer such as Adobe Reader is installed and your web browser is configured to display PDFs automatically. You may download and install Adobe Reader free at http://get.adobe.com/products/reader/
- Your web browser is set to permit running of JavaScript.
- Your web browser allows cookies to be set for this site. Please note that while we use cookies in the Online EDS, we do not use them to track personally identifiable information, so your privacy is maintained.
- Your monitor resolution is set to a minimum of 1024 x 768.

- While not required to submit an EDS, if you wish to view the training videos, you must have Adobe Flash Plug in version 9 or higher, speakers, and sound. Please note that very old computers may not be able to run Adobe Flash and will not be able to play the training videos. In that case, we encourage you to seek help using the Online EDS Manuals. You may download and install Adobe Flash Plug in free at htty://get.adobe.com/flashplayer

The Online EDS has been tested on Internet Explorer 6.0 and 7.0 and Firefox 2.0 and 3.0 on Windows XP and Mac OS X. Although it should work on other browsers and operating systems, the City of Chicago cannot guarantee compatibility.

CITY OF CHICAGO ECONOMIC DISCLOSURE STATEMENT AND AFFIDAVIT

INSTRUCTIONS FOR COMPLETING

The City of Chicago (the "City") requires disclosure of the information requested in this Economic Disclosure Statement and Affidavit ("EDS") before any City agency, department or City Council action regarding the matter that is the subject of this EDS. Please fully complete each statement, with all information current as of the date this EDS is signed. If a question is not applicable, answer with "N.A." An incomplete EDS will be returned and any City action will be delayed.

Please print or type all responses clearly and legibly. Add additional pages if needed, being careful to identify the portion of the EDS to which each additional page refers.

For purposes of this EDS:

"Applicant" means any entity or person making an application to the City for action requiring City Council or other City agency approval.

"Disclosing Party" means any entity or person submitting an EDS.

"Entity" or **"Legal Entity"** means a legal entity (for example, a corporation, partnership, joint venture, limited liability company or trust).

"Person" means a human being.

WHO MUST SUBMIT AN EDS:

An EDS must be submitted in any of the following three circumstances:

1. Applicants: An Applicant must always file this EDS. If the Applicant is a legal entity, state the full name of that legal entity. If the Applicant is a person acting on his/her own behalf, state his/her name.

2. Entities holding an interest: Whenever a legal entity has a beneficial interest (i.e. direct or indirect ownership) of more than 7.5% in the Applicant, each such legal entity must file an EDS on its own behalf.

3. Controlling entities. Whenever a Disclosing Party is a general partnership, limited partnership, limited liability company, limited liability partnership or joint venture that has a general partner, managing member, manager or other entity that can control the day-to-day management of the Disclosing Party, that entity must also file an EDS on its own behalf. Each entity with a beneficial interest of more than 7.5% in the controlling entity must also file an EDS on its own behalf.

CONTRACTOR'S AFFIDAVIT REGARDING REMOVAL OF ALL WASTE MATERIALS AND IDENTIFICATION OF ALL LEGAL DUMP SITES

Contractor to show here the name and location of the ultimate disposal site he/she is proposing to use for the subject project:

SPECIFY THE TYPE OF MATERIALS TO BE DISPOSED OF:

_____

_____

LEGAL NAME OF LANDFILL/DISPOSAL SITE:

_____

(The Contractor must provide to the commissioner of his/her designated representative with copies of all dump tickets, manifests, etc.)

LOCATION ADDRESS: _____

PHONE: (_____)_____

CONTACT PERSON: _____

Disposal site submitted shall be of sufficient capacity as to insure acceptance of the volume of Construction and/or Demolition Debris received for the period of this contract. These disposal sites must meet all zoning and other requirements that may be necessary.

If requested by the Chief Procurement Officer, the Contractor shall submit copies of all contractual agreements, sanitary landfill permits and/or licenses for these disposal site(s) proposed by the Contractor.

SPS/PS INITIALS RIDER ATTACHED

CONTRACTOR'S PERFORMANCE & PAYMENT BOND

Know All Men by these Presents, That we, **COMPANY NAME**
STREET ADDRESS
CITY, STATE ZIP CODE

Principal, hereinafter referred to as Contractor, and _____, Surety of the County of _____ and State of _____, are held and firmly bound unto the CITY OF CHICAGO in the penal sum of:

--- Dollar Amount in Words and 00/100 Dollars ($) ---

lawful money of the United States, for the payment of which sum of money, well and truly to be made, we bind ourselves, our heirs, executors, administrators, successors and assigns, jointly and severally, firmly by these presents.

Sealed with our seals and dated this _____ day of _____, 20___.

The Condition of the Above Obligation is such, that whereas the above bounden Contractor has entered into a certain contract with the City of Chicago, bearing

Contract No. **E-5-038** and Specification No. **425139** all in conformity with said contract, for,

Furnishing the City of Chicago, **Name of User Department**, all labor, tools, material, and equipment required and necessary for the project known as:

PROJECT DESCRIPTION

* The attached rider is incorporated herein by reference.

Now, if the said Contractor shall in all respects well and truly keep and perform the said contract on its part, in accordance with the terms and provisions of all of the Contract Documents comprising said contract, and in the time and manner therein prescribed, and further shall save, indemnify, and keep harmless the City of Chicago against all loss, damages, claims, liabilities, judgments, costs and expenses which may in anywise accrue against said City of Chicago, in consequence of the granting of said contract, or which may in anywise result therefrom, or which may result from strict liability, or which may in anywise result from any injuries to, or death of, any person, or damage to any real or personal property, arising directly or indirectly from or in connection with, work performed or to be performed under said contract by said Contractor, its Agents, Employees or Workmen, assignees, subcontractors, or anyone else, in any respect whatever, or which may result on account of any infringement of any patent by reason of the materials, machinery, devices or apparatus used in the performance of said contract, and moreover, shall pay to said City any sum or sums of money determined by the Purchasing Agent, and/or by a court of competent jurisdiction, to be due said City by reason of any failure or neglect in the performance of the requirements of said contract, wherefore the said Purchasing Agent shall have elected to suspend or cancel the same, and shall pay all claims and demands whatsoever, which may accrue to each and every materialman and subcontractor, and to each and every person who shall be employed by the said Contractor or by its assignees and subcontractors, in or about the performance of said contract, and with wages paid at prevailing wage rates if so required by said contract, and shall insure its liability to pay the compensation, and shall pay all claims and demands for compensation which may accrue to each and every person who shall be employed by them or any of them in or about the performance of said contract, or which shall accrue to the beneficiaries or dependents of any such person, under the provisions of the Workers' Compensation Act, 820 ILCS 305, as amended, and the Workers' Occupational Disease Act, 820 ILCS 310, as amended (hereinafter referred to as "Acts") then is this obligation to be null and void, otherwise to remain in full force and effect.

And it is hereby expressly understood and agreed, and made a condition hereof, that any judgement rendered against said City in any suit based upon any loss, damages, claims, liabilities, judgements, costs or expenses which may in anywise accrue against said City as a consequence of the granting of said contract, or which may in anywise result therefrom, or which may in anywise result from any injuries to, or death of, any person, or damage to any real or personal property; arising directly or indirectly from, or in connection with, work performed, or to be performed under said contract by said Contractor or its agents, employees or workmen, assignees, subcontractors, or anyone else and also any decision of the Industrial Commission of the State of Illinois;

and any order of court based upon such decision, or judgement thereon, rendered' against said City of Chicago in any suit or claim arising under the aforementioned Acts when notice of the pendency or arbitration proceedings or suit shall have been given said Contractor, shall be conclusive against each and all parties to this obligation, as to amount, liability and all other things pertaining thereto.

Every person furnishing material or performing labor in the performance of said contract, either as an individual, as a subcontractor, or otherwise, shall have the right to sue on this bond in the name of the City of Chicago for his use and benefit and in such suit said person as plaintiff, shall file a copy of this bond, certified by the party or parties in whose charge this bond shall be, which copy shall be,unless execution thereof be denied under oath; prima facie evidence of the execution and delivery of the original; provided, that nothing in thus bond contained shall be taken to make the City of Chicago liable to any subcontractor, materialman, laborer or to any other person to any greater extent than it would have been liable prior to the enactment of the Public Construction Bond Act, 30 ILCS 5 5 0 , as amended; provided further, that any person having a claim for labor and materials furnished m the performance of this contract shall have no right of action unless he shall have filed a verified notice of such claim with the Clerk of the City of Chicago within one hundred eighty (180) days after the date of the last item of work or the furnishing Of the last item of materials, and shall have furnished a copy of such verified notice to the contractor within ten (10) days of the filing of the notice with the City of Chicago. Such claim shall lie verified and shall contain the name and address of the claimant, the business address of the claimant within the State of Illinois, if any, or if the claimant be a foreign corporation having no place of business with the State the principal place of business of said corporation, and in all cases of partnership the names and residences of each. of the partners, the name of the contractor for the City of Chicago, the name of the person, firm or corporation by whom the claimant was employed or to whom such claimant furnished materials, the amount of the claim and a brief description of the public improvement for the construction or installation of which the contract is to be performed. Provided, further that no defect in the notice herein provided for shall deprive the claimant of his right of action under the terms and provisions of this bond unless it shall affirmatively appear that such defect has prejudiced the rights of an interested party asserting the same; provided, further, that no action shall be brought until the expiration of one hundred twenty (120) days after the date of the last item of work or of the furnishing of the last item of material, except in cases where the final settlement between the City of Chicago and the Contractor shall have been made prior to the expiration of the 120-day period in which case action may be taken immediately following such final settlement, and provided, further that no action of any kind shall be brought later than six (6) months after the acceptance by the City of Chicago of the completion of work. Any suit upon this bond shall be brought only in a circuit court of the State of Illinois in the judicial district in which the contract shall have been performed.

The said Surety, for value received, hereby stipulates and agrees that no change, extension of time, alteration or addition to the terms of any of the Contract Documents comprising said contract, or to the work to be performed thereunder, shall in anywise affect the obligations on this bond, and it does by waive notice of any such change, extension of time, alteration or addition to the terms of said Contract Documents or to the work.

COMPANY NAME

_____ (Seal)

Approved: _____, 20____ By: President

_____ _____ (Seal)

Chief Procurement Officer Attest: Secretary

_____ (Seal)

_____ (Seal)

_____ (Seal)

_____ (Seal)

PRINCIPAL IF CORPORATION

STATE OF ILLINOIS, }
COUNTY OF COOK, } ss.

I,_____, a Notary Public in and for the County and State aforesaid, DO HEREBY CERTIFY that_____ President and _____ Secretary of the_____ who are personally known to me to be the same persons whose names are subscribed in the foregoing instrument as such _____ President and_____ Secretary, appeared before me this day in person and acknowledged that they signed, sealed and delivered the said instrument of writing as their free and voluntary act, and as the free and voluntary act of the said_____ for the uses and purposes therein set forth, and caused the corporate seal of said Company to be thereto attached.

GIVEN under my hand and Notarial Seal this_____ day of _____20____

_____
Notary Public

SURETY, IF CORPORATE

STATE OF ILLINOIS, }
COUNTY OF COOK, } ss.

I,_____, a Notary Public in and for the County and State aforesaid, DO HEREBY CERTIFY that_____ _____ of the_____who_____ personally known to be the same person _____ whose name_____ subscribed in the foregoing instrument as such_____ _____, appeared before me this day in person and acknowledged that_____ signed, sealed and delivered the said instrument of writing as_____free and voluntary act, and as the free and voluntary act of the said_____ for the uses and purposes therein set forth, and caused the corporate seal of said Company to be thereto attached.

GIVEN under my hand and Notarial Seal this_____ day of _____20____

_____
Notary Public

PRINCIPAL IF INDIVIDUAL

STATE OF ILLINOIS, }
COUNTY OF COOK, } ss.

I,_____, a Notary Public in and for the County and State aforesaid, DO HEREBY CERTIFY that_____ who_____personally known to me to be the same persons whose name _____subscribed in the foregoing instrument, appeared before me this day in person and acknowledged that_____ he_____ signed, sealed and delivered the said instrument of writing as_____ free and voluntary act, for the uses and purposes therein set forth.

GIVEN under my hand and Notarial Seal this_____ day of _____20____

_____
Notary Public

GRC-160211-26-1

RIDER TO CONTRACTOR'S PERFORMANCE AND PAYMENT BOND

This Rider supplements Contractor's Performance and Payment Bond ("Bond") on that certain contract with the City of Chicago ("City") bearing Contract No. **E-5-038** and Specification No. **425139** ("Contract"). Surety acknowledges that the Contract requires Contractor to obtain from each of its subcontractors consent to a collateral assignment of their contracts with Contractor to the City. The Contract further grants the City the right, upon Contractor's default for failure to comply with Chapter 4-36 of the Municipal Code of the City, and at the City's sole option, to take over and complete the work to be performed by Contractor through the City's assumption of some or all of Contractor's subcontracts. If the City, in its sole discretion, exercises this right, then Surety waives any rights it may have to cure Contractor's default by performing the work itself or through others and remains bound by its other obligations under the Bond.

BOOK 3
DETAIL SPECIFICATIONS, STANDARDS, AND DETAILS

IRVING PARK ROAD BRIDGE OVER NORTH BRANCH CHICAGO RIVER

C.D.O.T. PROJECT NO.:	**E-5-038**
SPECIFICATION NO.:	**425139**
F.A. PROJECT NO.:	**PHGK(424)**
STATE JOB NO.:	**C-88-046-06**
SECTION NO.:	**05-E5038-00-BR/CDOT**

CITY OF CHICAGO
RAHM EMANUEL
MAYOR

Prepared by the
DEPARTMENT OF TRANSPORTATION
Contracts Section

REBEKAH SCHEINFELD
Commissioner - Department of Transportation
Suite 1100, 30 North LaSalle
Chicago, Illinois 60602-2570

DANIEL BURKE, P.E., S.E.
Deputy Commissioner - Division of Engineering

Issued by the
DEPARTMENT OF PROCUREMENT SERVICES

JAMIE L. RHEE
Chief Procurement Officer

Document Printed, January 2018

All Signatures To Be Sworn To Before A Notary Public

Federally Funded – Non FTA

DETAILED SPECIFICATIONS

IRVING PARK ROAD BRIDGE OVER NORTH BRANCH CHICAGO RIVER
CDOT PROJECT E-5-038

STANDARD SPECIFICATION

The following Detailed Specifications supplement the IDOT "Standard Specifications for Road and Bridge Construction," adopted April 1, 2016, (hereinafter referred to as the Standard Specifications or SSRBC); the IDOT "Supplemental Specifications and Recurring Special Provisions" adopted January 1, 2018; the latest edition of the "Illinois Manual on Uniform Traffic Control Devices for Streets and Highways" in effect on the date of invitation for bids; the IDOT "Manual of Test Procedures for Materials" in effect on the date of invitation for bids; the Supplemental Specifications and Recurring Special Provisions indicated on the Check Sheet included herein; the City of Chicago Department of Electrical Operations (DEO) Standard Specifications; and *included by reference* the City of Chicago Standard Specification for Sewer Construction, City of Chicago Department of Water Management Standard Specifications and the City of Chicago Department of Transportation Rules and Regulations for Construction in the Public Way (including Appendix B – ADA Standards) in effect on the date of invitation for bids. The latter two documents are available on the City of Chicago Department of Transportation's web site. In case of conflict with any part or parts of said specifications, these Detailed Specifications shall take precedence and shall govern.

Unless otherwise specified, the Description, General Requirements, Method of Measurements and Basis of Payment for the following items shall be as stated in the appropriate Sections of the Standard Specifications.

SPECIAL PROVISION (SP) NOTE

Y — Denotes the item with Contract or Project Specific Special Provisions, and/or items which conform to IDOT Recurring Special Provisions, Local Roads and Streets Special Provisions, Guide Bridge Special Provision, and Bureau of Design & Environmental (BDE) Special Provisions.

N — Denotes the item which conforms to the Illinois Department of Transportation "Standard Specifications for Road and Bridge Construction" adopted April 1, 2016, and the latest edition of the Supplemental Specifications and Recurring Special Provisions.

Typical Example and Digit Breakdown of a Coded Pay Item

CODE No. 42000200

Description.

PORTLAND CEMENT CONCRETE PAVEMENT 7”

420 – First 3 digits indicate the section of the Standard and Specification

00200 – Last 5 digits indicate the numerical sequence the item has in that section

TABLE OF CONTENTS

SPECIAL PROVISIONS TABLE OF CONTENTS ..... v-xiii
SPECIAL PROVISIONS 1-192
LOCATION OF PROJECT 1
DESCRIPTION OF PROJECT 1
GENERAL 1
CONSTRUCTION PERMITS 2
WORK RESTRICTIONS 2
CONSTRUCTION STAGING 2
ULTRA LOW SULFUR DIESEL FUEL 3
MAINTENANCE OF ROADWAYS 3
STATUS OF UTILITIES (D-1) 3
UTILITIES TO BE ADJUSTED 3
UTILITIES TO BE WATCHED AND PROTECTED 5
TRAFFIC CONTROL PLAN 6
STAGING RESTRICTIONS 7
PUBLIC CONVEINENCE AND SAFETY (DIST 1) 8
STAKEHOLDERS SURROUNDING PROJECT LIMITS 9
ITEM 1 TO ITEM 217 ..... 10 TO 192

INDEX FOR SUPPLEMENTAL SPECIFICATIONS AND RECURRING SPECIAL PROVISIONS SSRSP-1
CHECK SHEET FOR RECURRING SPECIAL PROVISIONS CSRSP-1
CHECK SHEET FOR RECURRING LOCAL ROADS AND STREETS SPECIAL PROVISIONS CSLRRSP-1
CHECK SHEET FOR BDE SPECIAL PROVISIONS BDE-1
CDOT SPECIAL PROVISIONS CDOT-1
DEPARTMENT OF WATER MANAGEMENT SPECIAL PROVISIONS DWM-1
CHECK SHEET FOR GUIDE BRIDGE SPECIAL PROVISIONS GBSP-1
CHECK SHEET FOR DISTRICT 1 SPECIAL PROVISIONS CSD1SP-1
DIVISION OF ELECTRICAL OPERATIONS MATERIAL SPECIFICATIONS DEO-1

SPECIAL PROVISIONS FOR WATER SEWER MAIN CONSTRUCTION APPENDIX A

THIS PAGE INTENTIONALLY LEFT BLANK

SPECIAL PROVISIONS TABLE OF CONTENTS

Item No.	Code Number	Description	SP REQ'D	PAGE NO.
1	CDOT2010020	TREE PROTECTION	Y	10
2	20100210	TREE REMOVAL (OVER 15 UNITS DIAMETER)	N	
3	20100110	TREE REMOVAL (6 TO 15 UNITS DIAMETER)	N	
4	20200100	EARTH EXCAVATION	N	
5	20201200	REMOVAL AND DISPOSAL OF UNSUITABLE MATERIAL	N	
6	20400800	FURNISHED EXCAVATION	N	
7	21001000	GEOTECHNICAL FABRIC FOR GROUND STABILIZATION	N	
8	CDOT2110010	PULVERIZED TOPSOIL MIX	Y	14
9	X2110100	TOPSOIL FURNISH AND PLACE, SPECIAL	Y	15
10	X2111100	TOPSOIL EXCAVATION AND PLACEMENT , SPECIAL	Y	21
11	20101400	NITROGEN FERTILIZER NUTRIENT	N	
12	20101600	POTASSIUM FERTILIZER NUTRIENT	N	
13	20101700	SUPPLEMENTAL WATERING	N	
14	25200110	SODDING, SALT TOLERANT	N	
15	CDOT2530020	PARKWAY AND TREEPIT TREES	Y	25
16	28000200	EARTH EXCAVATION FOR EROSION CONTROL	N	
17	28000250	TEMPORARY EROSION CONTROL SEEDING	N	
18	28000305	TEMPORARY DITCH CHECKS	N	
19	28000400	PERIMETER EROSION BARRIER	N	
20	28000510	INLET FILTERS	N	
21	28001000	AGGREGATE (EROSION CONTROL)	N	
22	28001100	TEMPORARY EROSION CONTROL BLANKET	N	
23	28100109	STONE RIPRAP, CLASS A5	N	
24	28200200	FILTER FABRIC	N	
25	28500400	ARTICULATED BLOCK REVETMENT MAT	N	
26	30300112	AGGREGATE SUBGRADE IMPROVEMENT 12"	Y	31
27	CDOT3110020	STRUCTURAL SOIL	Y	32

Item No.	Code Number	Description	SP REQ'D	PAGE NO.
28	CDOT3110010	SAND CUSHION, VARIABLE DEPTH	Y	36
29	35101800	AGGREGATE BASE COURSE, TYPE B 6"	N	
30	CDOT3530100	TEMPORARY PAVEMENT	Y	37
31	35300600	PORTLAND CEMENT CONCRETE BASE COURSE 11"	N	
32	40600290	BITUMINOUS MATERIALS (TACK COAT)	N	
33	40600535	LEVELING BINDER (HAND METHOD), N70	N	
34	40600827	POLYMERIZED LEVELING BINDER (MACHINE METHOD), IL-4.75, N50	N	
35	40600982	HOT-MIX ASPHALT SURFACE REMOVAL - BUTT JOINT	N	
36	40600990	TEMPORARY RAMP	N	
37	40603153	POLYMERIZED HOT-MIX ASPHALT SURFACE COURSE, STONE MATRIX ASPHALT, N80	N	
38	CDOT4060105	HOT-MIX ASPHALT SURFACE COURSE, IL-9.5L, MIX "C", N30 (CDOT)	Y	38
39	42000080	PAVEMENT CONNECTOR (PCC) FOR BRIDGE APPROACH SLAB	N	
40	CDOT4240010	PORTLAND CEMENT CONCRETE SIDEWALK, 5"	Y	41
41	CDOT4240040	PORTLAND CEMENT CONCRETE ADA RAMP 8 INCH	Y	42
42	44000100	PAVEMENT REMOVAL	N	
43	44000300	CURB REMOVAL	N	
44	44000500	COMBINATION CURB AND GUTTER REMOVAL	N	
45	44000600	SIDEWALK REMOVAL	N	
46	44003100	MEDIAN REMOVAL	N	
47	CDOT4400010	HOT-MIX ASPHALT SURFACE REMOVAL, VARIABLE DEPTH	Y	43
48	44201298	DOWEL BARS 1 1/4"	N	
49	44213200	SAW CUTS	N	
50	44213208	TIE BARS 1 1/4"	N	
51	CDOT5010010	REMOVAL OF EXISTING STRUCTURES	Y	44
52	CDOT5010030	CONCRETE REMOVAL	Y	45
53	50157300	PROTECTIVE SHIELD	N	

Item No.	Code Number	Description	SP REQ'D	PAGE NO.
54	50200100	STRUCTURE EXCAVATION	N	
55	50200300	COFFERDAM EXCAVATION	N	
56	50201101	COFFERDAM (TYPE 1) (LOCATION - 1)	N	
57	50201102	COFFERDAM (TYPE 1) (LOCATION - 2)	N	
58	50300260	BRIDGE DECK GROOVING	N	
59	50300285	FORM LINER TEXTURED SURFACE	Y	46
60	CDOT5030010	DRAINAGE SCUPPERS, DS-12	Y	50
61	CDOT5030020	HIGH PERFORMANCE CONCRETE STRUCTURES	Y	51
62	CDOT5030030	HIGH PERFORMANCE CONCRETE SUPERSTRUCTURES	Y	51
63	CDOT5030070	LATEX CONCRETE OVERLAY FOR NEW BRIDGE DECK, 2-1/4 INCH	Y	57
64	50500505	STUD SHEAR CONNECTORS	N	
65	CDOT5050010	FURNISHING AND ERECTING STRUCTURAL STEEL	Y	64
66	50800205	REINFORCEMENT BARS, EPOXY COATED	N	
67	50800515	BAR SPLICERS	N	
68	51500100	NAME PLATES	N	
69	52000110	PREFORMED JOINT STRIP SEAL	N	
70	52100020	ELASTOMERIC BEARING ASSEMBLY, TYPE II	N	
71	52100505	ANCHOR BOLTS, 5/8"	N	
72	52100530	ANCHOR BOLTS, 1 1/4"	N	
73	52200015	PERMANENT SHEET PILING	N	
74	52200100	FURNISHING SOLDIER PILES (HP SECTION)	N	
75	52200150	DRIVING SOLDIER PILES	N	
76	52200250	UNTREATED TIMBER LAGGING	N	
77	52200800	SEGMENTAL CONCRETE BLOCK WALL	N	
78	52200900	CONCRETE STRUCTURES (RETAINING WALL)	N	
79	54213657	PRECAST REINFORCED CONCRETE FLARED END SECTIONS 12"	N	
80	54215472	CAST-IN-PLACE REINFORCED CONCRETE END SECTIONS 72"	N	

Item No.	Code Number	Description	SP REQ'D	PAGE NO.
81	54248510	CONCRETE COLLAR	N	
82	550A0050	STORM SEWERS, CLASS A, TYPE 1 12"	N	
83	56103300	DUCTILE IRON WATER MAIN 12"	Y	65
84	56400500	FIRE HYDRANTS TO BE REMOVED	Y	67
85	56400600	FIRE HYDRANTS	Y	68
86	58700300	CONCRETE SEALER	N	
87	CDOT5870010	PROTECTIVE CONCRETE SEALER	Y	69
88	59100100	GEOCOMPOSITE WALL DRAIN	N	
89	59300100	CONTROLLED LOW-STRENGTH MATERIAL	N	
90	60200905	CATCH BASINS, TYPE A, 4'-DIAMETER, TYPE 9 FRAME AND GRATE	N	
91	60201005	CATCH BASINS, TYPE A, 4'-DIAMETER, TYPE 10 FRAME AND GRATE	N	
92	60218400	MANHOLE TYPE A, 4' DIAMETER, TYPE 1 FRAME, CLOSED LID	N	
93	60236700	INLETS, TYPE A, TYPE 10 FRAME AND GRATE	N	
94	60250200	CATCHBASINS TO BE ADJUSTED	Y	70
95	60255500	MANHOLES TO BE ADJUSTED	Y	70
96	60265700	VALVE VAULTS TO BE ADJUSTED	Y	70
97	60600605	CONCRETE CURB, TYPE B	N	
98	60602800	CONCRETE GUTTER, TYPE B	N	
99	CDOT6060020	COMBINATION CONCRETE CURB AND GUTTER, TYPE B-V.12	Y	71
100	CDOT6640010	TEMPORARY CHAIN LINK FENCE WITH SCREENING, 6'	Y	72
101	CDOT6640030	RELOCATE TEMPORARY CHAIN LINK FENCE WITH SCREENING	Y	73
102	CDOT6700010	ENGINEER'S FIELD OFFICE	Y	74
103	67100100	MOBILIZATION	N	
104	66900200	NON SPECIAL WASTE DISPOSAL	Y	76
105	66900205	SPECIAL WASTE DISPOSAL	Y	76
106	66900450	SPECIAL WASTE PLANS AND REPORTS	Y	76
107	66900530	SOIL DISPOSAL ANALYSIS	Y	76
108	66900665	TCL SOIL ANALYSIS	Y	76
109	70106800	CHANGEABLE MESSAGE SIGN	N	

Item No.	Code Number	Description	SP REQ'D	PAGE NO.
110	70300100	SHORT TERM PAVEMENT MARKING	N	
111	70300150	SHORT TERM PAVEMENT MARKING REMOVAL	N	
112	70300220	TEMPORARY PAVEMENT MARKING - LINE 4"	N	
113	70300260	TEMPORARY PAVEMENT MARKING - LINE 12"	N	
114	70400100	TEMPORARY CONCRETE BARRIER	N	
115	70400200	RELOCATE TEMPORARY CONCRETE BARRIER	N	
116	70600255	IMPACT ATTENUATORS, TEMPORARY (FULLY REDIRECTIVE, NARROW), TEST LEVEL 2	N	
117	70600322	IMPACT ATTENUATORS, RELOCATE (FULLY REDIRECTIVE, NARROW), TEST LEVEL 2	N	
118	73000100	WOOD SIGN SUPPORT	N	
119	78000600	THERMOPLASTIC PAVEMENT MARKING - LINE 12"	N	
120	78000200	THERMOPLASTIC PAVEMENT MARKING - LINE 4"	N	
121	78000400	THERMOPLASTIC PAVEMENT MARKING - LINE 6"	N	
122	78000650	THERMOPLASTIC PAVEMENT MARKING - LINE 24"	N	
123	78000100	THERMOPLASTIC PAVEMENT MARKING - LETTERS AND SYMBOLS	N	
124	78008210	POLYUREA PAVEMENT MARKING TYPE I - LINE 4"	N	
125	78008230	POLYUREA PAVEMENT MARKING TYPE I - LINE 6"	N	
126	78008250	POLYUREA PAVEMENT MARKING TYPE I - LINE 12"	N	
127	78200010	BARRIER WALL REFLECTOR, TYPE B	N	
128	78300100	PAVEMENT MARKING REMOVAL	Y	81
129	81028350	UNDERGROUND CONDUIT, PVC, 2" DIA.	N	
130	81100200	CONDUIT ATTACHED TO STRUCTURE, 3/4" DIA., GALVANIZED STEEL	N	

Item No.	Code Number	Description	SP REQ'D	PAGE NO.
131	81300220	JUNCTION BOX, STAINLESS STEEL, ATTACHED TO STRUCTURE, 6" X 6" X 4"	N	
132	81300550	JUNCTION BOX, STAINLESS STEEL, ATTACHED TO STRUCTURE, 12" X 12" X 6"	N	
133	X0321809	PERMANENT GROUND ANCHOR	Y	82
134	X0321963	MICRO-PILES	Y	94
135	X0323360	WOODEN POLE REMOVAL	Y	95
136	X0323432	MICROPILE LOAD TEST	Y	94
137	X0323433	MICROPILE PROOF LOAD TEST	Y	94
138	X0324044	EROSION CONTROL, TEMPORARY PIPE SLOPE DRAIN	Y	96
139	X0327213	REMOVE TEMPORARY PIPE SLOPE DRAIN	Y	97
140	X0327552	TREE GRATE REMOVAL	Y	98
141	X0327691	GRATING FOR CONCRETE HEADWALL NO 1	Y	99
142	X2020502	BRACED EXCAVATION	Y	100
143	X2200018	ORNAMENTAL FENCE	Y	101
144	X5090850	ORNAMENTAL RAILING	Y	103
145	X5860110	GRANULAR BACKFILL FOR STRUCTURES	Y	106
146	X6061460	PAVED DITCH (SPECIAL)	Y	107
147	X6640555	CHAIN LINK FENCE, 5' (SPECIAL)	Y	108
148	X7010216	TRAFFIC CONTROL AND PROTECTION, (SPECIAL)	Y	109
149	X8140105	HANDHOLE (SPECIAL)	Y	114
150	Z0007124	STEEL RAILING (SPECIAL)	Y	115
151	Z0007126	HANDRAIL REMOVAL	Y	116
152	Z0007430	TEMPORARY SIDEWALK	Y	117
153	Z0012754	STRUCTURAL REPAIR OF CONCRETE (DEPTH EQUAL TO OR LESS THAN 5 INCHES)	Y	118
154	Z0013797	STABILIZED CONSTRUCTION ENTRANCE	Y	119
155	Z0013798	CONSTRUCTION LAYOUT	Y	120
156	Z0030850	TEMPORARY INFORMATION SIGNING	Y	121
157	Z0046304	PIPE UNDERDRAINS FOR STRUCTURES 4"	Y	123

Item No.	Code Number	Description	SP REQ'D	PAGE NO.
158	********	SUBBASE GRANULAR MATERIAL, NON-LIMESTONE	Y	124
159	********	PERMEABLE PAVERS	Y	126
160	********	PERMEABLE PAVER REMOVAL	Y	133
161	********	GRADING AND SHAPING SHARED USE PATH	Y	134
162	********	MAINTENANCE OF ACCESS TO ABUTTING PROPERTIES	Y	135
163	********	CAST IRON TREE GRATES, GRATE FRAMES, AND THICKENED SLAB, 5' BY 10'	Y	136
164	********	REMOVAL OF EXISTING WOODCHIP TRAIL	Y	139
165	********	MULCH TRAIL	Y	140
166	********	REMOVE EXISTING SIGN PANEL AND SALVAGE	Y	141
167	********	REMOVE EXISTING SIGN PANEL AND POLE ASSEMBLY, FROM SIDEWALK, AND SALVAGE	Y	141
168	********	FURNISH SIGN PANEL, TYPE 1, REFLECTIVE, TYPE A, SINGLE-SIDED	Y	142
169	********	FURNISH SIGN PANEL, TYPE 1, REFLECTIVE, TYPE A, DOUBLE-SIDED	Y	142
170	********	FURNISH AND INSTALL PROJECT SIGN, TYPE A	Y	144
171	********	FURNISH AND INSTALL PROJECT SIGN, TYPE B	Y	144
172	********	FURNISH AND INSTALL PROJECT SIGN, BANNER	Y	144
173	********	FURNISH AND INSTALL POLE, DRILL METHOD	Y	146
174	********	INSTALL SIGN PANEL TY. 1, CENTER MOUNT ON SIGN POLE	Y	149
175	********	INSTALL SIGN PANEL TY. 1, FLAG MOUNT ON SIGN POLE	Y	149
176	********	TRENCH AND BACKFILL WITH SCREENINGS	Y	150
177	********	ELECTRICAL HANDHOLE, 30", 24" FRAME AND LID	Y	152
178	********	DRILL EXISTING MANHOLE OR HANDHOLE	Y	154

Item No.	Code Number	Description	SP REQ'D	PAGE NO.
179	********	GALVANIZED STEEL CONDUIT ATTACHED TO STRUCTURE 2"	Y	155
180	********	PVC CONDUIT IN TRENCH 2"	Y	155
181	********	GALVANIZED STEEL CONDUIT IN TRENCH 2"	Y	155
182	********	GALVANIZED STEEL CONDUIT IN TRENCH 3"	Y	155
183	********	GALVANIZED STEEL CONDUIT ATTACHED TO STRUCTURE 4"	Y	155
184	********	CONCRETE FOUNDATION, 28" DIAMETER, 1 1/4" ANCHOR RODS, 15" BOLT CIRCLE, 7 FEET	Y	158
185	********	CONCRETE FOUNDATION, 30" DIAMETER, 1" ANCHOR RODS, 15" BOLT CIRCLE, 7 FEET	Y	158
186	********	ELBOW, CONDUIT, STEEL, 2" ADJACENT TO EMBEDDED POLE/STRUCTURE	Y	160
187	********	CONDUIT RISER UP POLE 2"	Y	162
188	********	ELECTRIC CABLE IN CONDUIT, 1/C NO. 6	Y	163
189	********	ELECTRIC CABLE IN CONDUIT, TRIPLEX, 2 1/C NO. 6, 1 1/C NO. 8	Y	165
190	********	CHICAGO 2000 STREET LIGHT UNIT	Y	167
191	********	EXTENDED LOOP LIGHT UNIT	Y	169
192	********	LUMINAIRE, CHICAGO 2000 PENDANT, LED, TYPE III	Y	171
193	********	LUMINAIRE, ORNAMENTAL, ACORN, LED, TYPE III	Y	172
194	********	MAINTAIN EXISTING LIGHTING SYSTEM	Y	173
195	********	MAINTENANCE OF EXISTING FIRE ALARM CABLE, AND DISCONNECTION AND RECONNECTION OF INTERCONNECT CABLE	Y	174
196	********	REMOVE EXISTING STREET LIGHTING EQUIPMENT	Y	176
197	********	BREAKDOWN EXISTING HANDHOLE	Y	177
198	********	BREAKDOWN MANHOLE IN PARKWAY	Y	177
199	********	BREAKDOWN STREET LIGHT FOUNDATION	Y	178

Item No.	Code Number	Description	SP REQ'D	PAGE NO.
200	********	TRENCH AND BACKFILL FOR ELECTRICAL WORK	Y	179
201	********	ELECTRIC CABLE IN TRENCH, 600V (XLP-TYPE USE) 1/C NO. 6	Y	180
202	********	ELECTRIC CABLE IN TRENCH, 600V (XLP-TYPE USE) 1/C NO. 8	Y	180
203	********	ELECTRIC CABLE IN CONDUIT, 600V (XLP-TYPE USE) 1/C NO. 10	Y	180
204	********	PATH LIGHT FIXTURE	Y	181
205	********	PATH UNDERPASS LUMINAIRE	Y	182
206	********	PATH LIGHT POLE	Y	183
207	********	CONTROLLER, UNDERPASS LIGHTING, WALL MOUNTED, 1 PHASE, 60 AMP	Y	184
208	********	SERVICE CONNECTION TO CECO LINE	Y	185
209	********	SERVICE INSTALLATION, 100 AMP	Y	186
210	********	SERVICE CABLE, 3/C NO. 2	Y	188
211	********	MONITORING OF EXISTING FACILITIES	Y	189
212	Z0076600	TRAINEES	Y	192

LOCATION OF PROJECT

The Irving Park Road Bridge (FAP 345) over the North Branch of the Chicago River is located in the City of Chicago, Cook County Illinois, between California Avenue to the west and Rockwell Street to the east. The net length of the project improvement is approximately 870 feet. In addition, the work for the multi-use path is located between California Park on the South and Horner Park on the North. The net length of the path improvement is approximately 845 feet.

DESCRIPTION OF PROJECT

This project consists of the removal and reconstruction of the Irving Park Road Bridge over the North Branch of the Chicago River (SN 016-6090), Irving Park Road pavement resurfacing and shoulder widening, drainage modifications, installation of pavement markings, erosion and sediment control devices, landscaping, construction of a shared use path including retaining walls, roadway, underpass, and path lighting, watermain relocation, maintenance of traffic, coordination with MWRD, Chicago Park District and local stakeholders as described and shown on the contract plans.

This description of work is intended to be general in nature and is neither a complete description nor a limitation on the work to be performed. Contractor shall perform all Work described in the Contract Documents or reasonably inferable as necessary to produce the results specified therein, except to the extent specifically indicated in the Contract Documents to be the responsibility of others.

GENERAL

These contract documents have been prepared based on field inspection, existing plans, and other information available at the time of design. Actual field conditions may require modifications to construction details and quantities shown on the contract plans. It shall be the Contractor's responsibility to verify the plan dimensions and details in the field and make necessary adjustments, as approved by the Commissioner, prior to construction or ordering materials. Such variations shall not be cause for additional compensation or a change in the scope of work. The Contractor shall be paid for the quantity actually furnished in place at the unit price bid for the work.

The Special Provisions included in the Detailed Specifications supplement the following documents that shall govern the construction of this project:

- The Illinois Department of Transportation "Standard Specifications for Road and Bridge Construction" adopted April 1, 2016;
- The Illinois Department of Transportation "Supplemental Specifications and Recurring Special Provisions" adopted January 1, 2018 (applicable Special Provisions are indicated on the Check Sheet included herein);

- The Illinois Department of Transportation "Recurring Local Roads and Streets Special Provisions" adopted January 1, 2018 (applicable Special Provisions are indicated on the Check Sheet included herein);
- The Illinois Department of Transportation District One Detail Standards and corresponding special provisions (applicable Special Provisions are indicated on the Check Sheet included herein);
- The Illinois Department of Transportation "Guide Bridge Special Provisions" (applicable Special Provisions are indicated on the Check Sheet included herein);
- The Illinois Department of Transportation "Bureau of Design and Environment (BDE) Special Provisions" (applicable Special Provisions are indicated on the Check Sheet included herein);
- The Chicago Division of Electrical Operations specifications (applicable Special Provisions are included herein);
- The latest edition of the "Illinois Manual on Uniform Traffic Control Devices for Streets and Highways" in effect on the date of invitation for bids;
- The City of Chicago Department of Water Management latest edition of the "Standard Specifications for Water and Sewer Main Construction";
- The City of Chicago Department of Transportation Rules and Regulations for Construction in the Public Way (including Appendix B – ADA Standards) in effect on the date of invitation for bids.

CONSTRUCTION PERMITS

The Contractor shall be responsible for obtaining all construction permits that may be necessary for access to the job site, for storage of materials and equipment and for construction operation. The cost of complying with the requirements of this section shall be considered incidental to the Contract.

WORK RESTRICTIONS

To avoid impacts to the banded killifish and disturbance during the spawning season, no instream work shall occur from May 5th through July 15th.

CONSTRUCTION STAGING

The Contractor must, at all times, conduct the work in such a manner as to insure the least obstruction to vehicular and pedestrian traffic. The Contractor must provide all temporary facilities necessary to maintain vehicular and pedestrian traffic and access to all property to the satisfaction of the Commissioner. Traffic control devices, conforming to Illinois Department of Transportation Standards, must be placed as shown on the Standard Drawings at the end of the plans entitled Traffic Control Standards. This work will be included in the contract unit price for "Traffic Control and Protection (Special)" as applicable.

ULTRA LOW SULFUR DIESEL FUEL

The contractor and all subcontractors shall use Ultra Low Sulfur Diesel Fuel (15 ppm sulfur content or less) for diesel motor vehicles, non-road diesel vehicles, and stationary diesel generators with engine ratings of 50 H.P. and above used in the performance of the contract work. The cost of using Ultra Low Sulfur Diesel Fuel is incidental to the contract.

Prior to the commencement of work, the contractor and all applicable subcontractors are to provide a certified letter indicating that they are aware of and will comply with the Ultra Low Diesel Fuel requirement.

The Engineer may, at his/her discretion, request certified fuel delivery slips for applicable equipment being used on the job site. If any diesel powered equipment is found to be in noncompliance the Engineer will issue the Contractor a notice of noncompliance and identify an appropriate period of time, but no more than 24 hours, in which to bring the equipment into compliance or remove it from the project site.

MAINTENANCE OF ROADWAYS

Beginning on the date that work begins on this project, the Contractor shall assume responsibility for normal maintenance of all existing roadways within the limits of the improvement. This normal maintenance shall include all repair work deemed necessary by the Engineer, but shall not include snow removal operations. Traffic control and protection for maintenance of roadways will be provided by the Contractor as required by the Engineer.

This work will be paid for as "Traffic Control and Protection, Special".

STATUS OF UTILITIES (D-1)

Effective: June 1, 2016

Utility companies and/or municipal owners located within the construction limits of this project have provided the following information in regard to their facilities and the proposed improvements. The tables below contain a description of specific conflicts to be resolved and/or facilities which will require some action on the part of the contractor to proceed with work. Each table entry includes an identification of the action necessary and, if applicable, the estimated duration required for the resolution.

UTILTIES TO BE ADJUSTED

Conflicts noted below have been identified by following the suggested staging plan included in the contract. The company has been notified of all conflicts and will be required to obtain the necessary permits to complete their work; in some instances resolution will be a function of the construction staging. The responsible agency must relocate or complete new installations as noted in the action column; this work has been deemed necessary to be complete for the contractor to then work in the stage under which the item has been listed.

Pre-Stage

STAGE / LOCATION	TYPE	DESCRIPTION	RESPONSIBLE AGENCY	ACTION
Pre-Stage	Electrical	Lines suspended from the existing bridge	**ComEd**	ComEd will move their lines to the north side of the bridge prior to the start of the project. Existing facilities are in conflict with Stage 1 removal on the south side of the bridge

Stage 1

STAGE / LOCATION	TYPE	DESCRIPTION	RESPONSIBLE AGENCY	ACTION
Between Stage 1 and 2	Electrical	Lines suspended from the existing bridge	**ComEd**	After the deck is poured and prior to placement of the approach slabs in Stage 1, ComEd will relocate their facilities from the temporary location on the north side of the bridge to the utility's permanent location mounted on the south side of the bridge

The following contact information is what was used during the preparation of the plans as provided by the Agency/Company responsible for resolution of the conflict.

Agency/Company Responsible to Resolve Conflict	Name of contact	Address	Phone	e-mail address
ComEd	Michelle Ho		773-509-3284	michelle.ho@comed.com

UTILITIES TO BE WATCHED AND PROTECTED

The areas of concern noted below have been identified by following the suggested staging plan included for the contract. The information provided is not a comprehensive list of all remaining utilities, but those which during coordination were identified as ones which might require the contractor to take into consideration when making the determination of the means and methods that would be required to construct the proposed improvement. In some instances the contractor will be responsible to notify the owner in advance of the work to take place so necessary staffing on the owners part can be secured.

All Stages

STAGE / LOCATION	TYPE	DESCRIPTION	OWNER	ACTION
	Sewer	72" MWRD sewer and drop shaft	MWRD	Watch and protect
	Watermain	Contract shall coordinate with CDWM to establish watermain shutdowns and applicable testing	CDWM	Coordinate in order to accomplish proposed work

The days required for conflict resolution should be taken into account in the bid as the information in the contract documents has also been factored into the timeline identified for the project when setting the completion date. The applicable portions of the Standard Specifications for Road and Bridge Construction shall apply.

The estimated relocation dates must be part of the progress schedule submitted by the contractor. A utility kickoff meeting will be scheduled between the contractor and the utility companies. The contractor is responsible for contacting D.I.G.G.E.R. prior to any and all excavation work.

TRAFFIC CONTROL PLAN

Traffic Control will be according to the applicable sections of the Standard Specifications for Road and Bridge Construction, the City of Chicago's Rules and Regulations for Construction in the Public Way, the guidelines contained in the Illinois Manual on Uniform Traffic Control Devices for Streets and Highways, the Supplemental Specifications and the Recurring Special Provisions, the Specifications and any special details and highway standards contained herein and in the Plans.

Special attention is called to Articles 107.09 and 107.14 and Section 701 of the Standard Specifications for Road and Bridge Construction and the following traffic control related to payment of temporary aggregate not being an extra as noted on Article 107.09, (1) Highway Standards; (2) Supplemental Specifications and Recurring Special Provisions; and (3) Other Specifications contained herein except where provisions in this specification conflict at which time the provisions detailed in this document supersede:

1. Standards:

HIGHWAY STANDARDS: 701427-05, 701601-09, 701602-09, 701701-10, 701801-06, 701901-07, 704001-08, and 782006.

DETAILS: Maintenance of Traffic – General Notes, Narrative, Plans, and District One Standards, TC-10, TC-14, TC-26, TC-22, and TC-24.

2. Special Provisions:

PUBLIC CONVENIENCE AND SAFETY (D1)
MAINTENANCE OF ROADWAYS
PAVEMENT MARKING REMOVAL (BDE)
TEMPORARY PAVEMENT MARKING (BDE)
TEMPORARY INFORMATION SIGNING
KEEPING ARTERIAL ROADWAYS OPEN TO TRAFFIC

3. Traffic:

Maintain traffic and provide access at all times.

STAGING RESTRICTIONS

Prior to the actual beginning and completion of the various stages of construction and traffic protection, the Contractor will be required to provide lane closures and barricade systems, for preparation work such as pavement marking removal, temporary lane marking, placing temporary concrete barrier, relocating existing guardrail, etc. These lane closures and barricade systems, including barricades, drums, cones, lights, signs, flaggers etc. shall be provided in accordance with details in the Plans and these Special Provisions and as approved by the Commissioner. The cost of this work will not be paid for separately but shall be considered included in the contract lump sum price for TRAFFIC CONTROL AND PROTECTION, (SPECIAL).

LANE CLOSURES/RESTRICTIONS

It is acknowledged that possible lane closures on Irving Park Road have been coordinated with the CDOT Public Right of Way Permit Office but note that lane closures are not definite or guaranteed at any time. All lane closure requests must be coordinated with nearby stakeholders and permitted by the Public Right of Way Permit Office.

The following closure windows on Irving Park Road over the North Branch Chicago River:

FULL CLOSURE:
Weeknights: 11:00 pm to 5:00 am (September - May) and 1:00 am to 5:00 am (June - August)

Weekends: 11:00 pm to 6:00 am (September - May) and 1:00 am to 6:00 am (June - August)

INDIVIDUAL LANE CLOSURES:
Weekdays: 9:30 am - 3:30 pm

Non-Permitted Weekdays and Weekends

Special closures along Irving Park Road will not be allowed during the holiday periods stated in Article 107.09 and amended by PUBLIC CONVENIENCE AND SAFETY (D-1), Chicago Cubs games, and other major Wrigley Field events.

The Contractor shall submit to the Commissioner four (4) weeks ahead of time, in writing, a traffic control plan for lane closures along Irving Park Road. Approval from the Commissioner is required prior to closing the lanes. Should the Contractor fail to complete the work and reopen lanes to traffic within the allowable time limit, the Contractor shall be liable for liquidated damages as noted under FAILURE TO OPEN TRAFFIC LANES TO TRAFFIC.

The Contractor will coordinate the proposed construction staging and sequence of construction operations with the Commissioner to present an effective and timely schedule for successful

completion of the project while maintaining access and minimizing disruptions to the daily operations and special event schedules of the adjacent developments.

Coordination efforts with adjacent developments, providing the required traffic control to maintain access to the adjacent developments, pedestrian protection and special event staging shall be included in the contract lump sum price for TRAFFIC CONTROL AND PROTECTION, (SPECIAL).

FAILURE TO OPEN TRAFFIC LANES TO TRAFFIC

Should the contractor fail to completely open and keep open all the traffic lanes, the Contractor is liable for the amount stated under Article 105.03(b) as specified in "Traffic Control and Protection, Special".

PUBLIC CONVENIENCE AND SAFETY (DIST 1)
Effective: May 1, 2012
Revised: July 15, 2012

Add the following to the end of the fourth paragraph of Article 107.09:

"If the holiday is on a Saturday or Sunday, and is legally observed on a Friday or Monday, the length of Holiday Period for Monday or Friday shall apply."

Add the following sentence after the Holiday Period table in the fourth paragraph of Article 107.09:

"The Length of Holiday Period for Thanksgiving shall be from 5:00 AM the Wednesday prior to 11:59 PM the Sunday After"

Delete the fifth paragraph of Article 107.09 of the Standard Specifications:

"On weekends, excluding holidays, roadways with Average Daily Traffic of 25,000 or greater, and all lanes shall be open to traffic from 3:00 P.M. Friday to midnight Sunday except where structure construction or major rehabilitation makes it impractical."

STAKEHOLDERS SURROUNDING PROJECT LIMITS

Chicago Park District

– Horner Park (2741 W. Montrose Avenue)

– California Park (3843 N. California Avenue)

– Revere Park (2509 W. Irving Park Road)

Horner Park Advisory Council

River Park North Condominiums

Bob Langjahr – Property Manager

Children's Lighthouse Learning Center – 2600 W. Irving Park Road

Scott Waltenburg – Property Owner

Chicago Transit Authority – Bus Operations

ITEM NO. 1 CDOT2010020 TREE PROTECTION

Description. Work under this item shall be performed according to Section 201 of the IDOT Standard Specifications for Road and Bridge Construction except as herein modified.

Method of Construction

Tree Trunk Protection: The Contractor shall provide 2 inches by 8 inches by 8 foot boards, banded continuously around each trunk to prevent scarring of trees shown on the plans or designated by the Commissioner. For multi-stem trees, saplings, and shrubs to be protected within the area of construction, temporary fencing may be used for trunk protection.

The Contractor shall repair or replace any and all damaged plant material determined by the Commissioner to any existing or newly installed plant material at its own expense. Unnecessary damage to ground cover, grasses or turf shall be repaired or replaced as specified for restoration of similar areas within the plans, or as directed by the Commissioner, and shall be at the Contractor's expense.

Root Zone Protection**:** During the entire construction period all reasonable efforts shall be made to protect from damage those trees and their root system designated to remain. Around the trees to be protected, the Contractor shall avoid excessive excavation or compaction and damage during the removal of trees and shrubs designated to be removed. All plant material designated to be saved, or outside of the limits of construction, shall be protected during subsequent construction work. Work under these items will include construction and maintenance of temporary fencing to protect the root zones of existing trees and other plantings, construction and maintenance of tree trunk protection. A protection barrier or temporary fence of at least 4 feet in height shall be installed around each tree or tree grouping to be protected and preserved. The tree protection shall be installed prior to the actual construction start and maintained for the duration of the project.

Within this protection zone, construction materials shall not be stored, equipment operated and/or temporary storage buildings or work trailers placed.

The protection barrier shall be constructed of orange snow fencing securely fastened to fence posts spaced a maximu1m 5 feet on center. Posts are 6 feet in length with 2 feet set into the ground and 4 feet extending above ground. The fencing shall be attached to the post with a minimum of four (4) nylon-locking ties evenly spaced at each post.

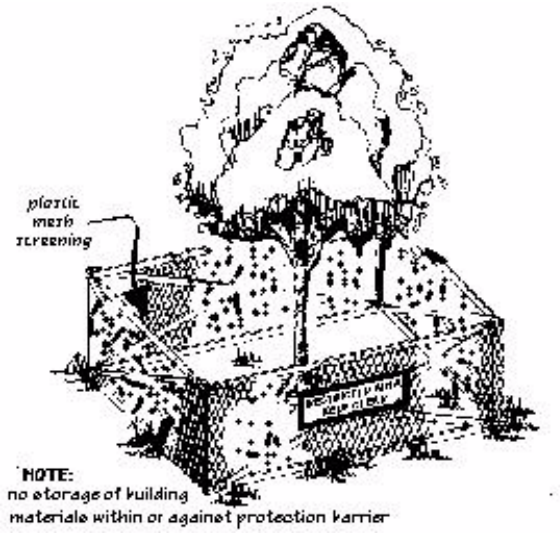

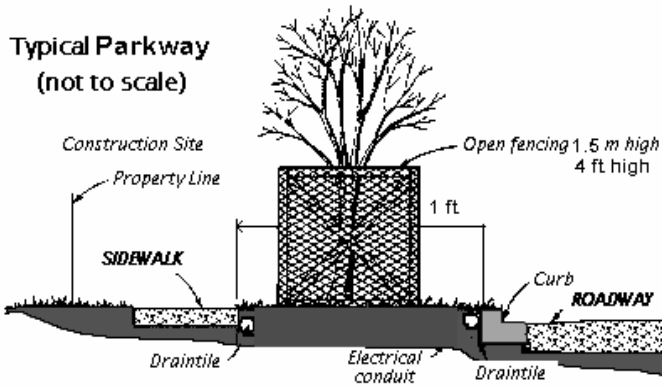

Dimensions of the protection barrier are as follows:

Trees located in Tree Pits**:**

Where trees are located within Tree Pits, the fencing should be installed at a minimum distance of the inside dimension of the Tree Pit opening with one stake at each corner of the opening.

Trees Located in Parkways or Boulevards:

Small Trees (<9" D.B.H.): Minimum 5 feet from face of tree along the parkway length. In the dimension bordered by the public sidewalk or curb, the fencing shall be the width of the grass parkway with a maximum offset of 1 foot from back of curb or edge of sidewalk. In no case shall the closure be less than 2 feet from the centerline of the tree. (Example: 6" Tree in a 6' parkway as measured from back of curb to sidewalk. The dimension of the protection fencing would be 4' x 10' with tree in the center). Note: Larger grass parkways (>12') may allow for a ten-foot by ten foot (10' x 10').

Medium (10"to 15" D.B.H.): Minimum of 10 feet from face of tree along the parkway length. In the dimension bordered by the public sidewalk or curb, the fencing shall be the width of the grass parkway with a maximum offset of 1 foot from back of curb or edge of sidewalk. In no case shall the closure be less than 2 feet from the centerline of the tree.

Large (>15" D.B.H.): Minimum of 15 feet from face of tree along the parkway length. In the dimension bordered by the public sidewalk or curb, the fencing shall be the width of the grass parkway with a maximum offset of 1 foot from back of curb or edge of sidewalk. In no case shall the closure be less than 2 feet from the centerline of the tree.

The Contractor shall be responsible to protect all trees from damage at the construction site in accordance with Municipal Code Title 10 Chapter 32. It shall be the responsibility of the Contractor to restore all damaged parkways to their original condition. Any trees damaged as a result of construction activity as determined by the, the Chicago Park District, shall be repaired, removed and/or replaced at the Contractor's expense. The Contractor as specified in the Municipal Code shall pay liquidated damages in the amount of the appraised value of the tree(s).

At a minimum, any tree greater than 4" D.B.H. that is permanently damaged due to the construction project and not originally marked for removal shall be replaced with a new tree as identified by the Chicago Park District and shall have a minimum of 4" caliper B&B. Any damaged tree smaller than 4" caliper measured 6" above the ground shall be replaced in kind, inch for inch.

Root pruning: Root pruning associated with this item shall take place only where the roots of existing trees have been damaged by the Contractor during construction of the Project, as directed by the Commissioner.

If construction is to occur within the root zone of existing plant material, root pruning and special plant care including fertilizing and watering will be required, as directed by the Commissioner and hereinafter specified. Prior to root pruning, remove all weeds growing in existing tree mulch rings. Root pruning using an approved mechanical root pruning saw shall be performed prior to digging where noted on the plans, or directed by the Commissioner. Whenever roots of plant material to remain are exposed during construction, the damaged root ends are to be removed by cutting them off cleanly.

Initial watering shall be performed on all trees, which are designated for root pruning. Water trees immediately by thoroughly saturating root balls and provide a horticultural watering bag, such as a Gator Bag or equivalent, filled with water to keep root balls thoroughly saturated during first three weeks following root pruning. Thereafter refill bags as required, according to weather conditions, to keep root balls in a moist condition during growing seasons, through the duration of the Project. Test root balls for optimal moisture once a week using a soil auger.

Contractor shall be responsible for location of all utilities prior to installation of trees. Notification of Chicago's Utilities Alert Network (DIGGER) is required for all planting sites (312) 744-7000.

All pruning shall be overseen by a professional arborist (someone whose principal occupation is the care and maintenance of trees). All pruning shall be done according to the National Arborist Association's Pruning Standards for Shade Trees Class 11 - Standard Pruning Specifications.

Any damage to the root zone, as determined by the Commissioner, will be compensated by pruning an equivalent amount of the top vegetative growth of the material within 1 week following root damage, fertilization and supplemental watering.

Fertilize damaged trees with fertilizer that promotes root growth. Fertilizer nutrients shall be applied within 48 hours after root damage occurs. Fertilizer nutrients shall be applied within 48 hours after root damage occurs. A fertilizer with a 1: 1: 1 ratio shall be applied at the rate of .5 pounds of nutrients per 1000 square feet (2 kg per 90 square meters).

Application shall be accomplished by placing dry fertilizer in holes in the soil. The holes shall be 8 inches to 12 inches deep and spaced 24 inches apart in an area beginning 30 inches from the base of the plant. Holes can be punched with a punch bar, dug with a spade, drilled with an auger or any other method approved by the Commissioner. Approximately 0.02 pounds of fertilizer nutrients shall be placed in each hole 250 holes per 1000 square feet. Fertilizer Nutrients shall not be measured for payment but considered incidental to root pruning. If the Commissioner determines that the whole method of fertilizer placement is not practical or desirable, an approved method of uniform surface application will be allowed. Neither separate measurement nor payment will be made for fertilization, but will be considered incidental to the cost of TREE PROTECTION.

Supplemental water shall be applied within 48 hours of any root damage. The water shall be applied at the rate of 7 quarts per square yard of surface area within the root zone of plant material having sustained damage to the root zone. Root zone shall be calculated as the areas, which extend three meters beyond the limits of the crown's branches. Subsequent weekly watering shall be applied if deemed necessary by the Commissioner. Neither separate measurement nor payment will be made for supplemental watering but will be considered incidental to the cost of TREE PROTECTION.

The Contractor shall repair or replace any and all damage determined by the Commissioner to any existing or newly installed plant material at its own expense. Unnecessary damage to ground cover, grasses or turf shall be repaired or replaced as specified for restoration of similar areas within the plans, or as directed by the Commissioner, and shall be at the Contractor's expense.

Materials shall be disposed of according to Article 202.03.

Method of Measurement. TREE PROTECTION will be measured by linear foot of fencing.

Basis of Payment. This work will be paid for at the contract unit price for each linear foot of TREE PROTECTION and will include all fencing and care provided to preserve the trees.

ITEM NO. 8 CDOT2110010 PULVERIZED TOPSOIL MIX

Effective: July 15, 2009

Description. Work under this item shall be performed according to Section 211 of the IDOT Standard Specifications for Road and Bridge Construction, except as herein modified:

General. Topsoil furnished from outside the limits of the right-of-way shall be pulverized or screened, natural, fertile, friable soil possessing characteristics of rich productive soils in the Chicago area. It shall be obtained from naturally well-drained areas, not excessively acid or alkaline and contain no toxic substances which may be harmful to plant growth. It shall be completely without admixture of subsoil, free from clay lumps, roots, stones, and other debris. The topsoil shall not be handled in frozen or muddy conditions.

The Contractor shall inform the Commissioner in writing, ten (10) days in advance of the delivery of topsoil to the job site, as to the location from which the topsoil is to be obtained, the crops or plants which have been grown in the soil during the past five (5) years and the depth to which the top soil is to be taken. A minimum of three (3) samples of the topsoil proposed for this work shall be furnished a minimum of ten (10) days before delivery of topsoil to the job site. Each sample submitted shall be in a separate container, approximately one quart in size, appropriately labeled and taken from a different location at the source. Each container shall be completely filled with uncompacted topsoil.

A sample, free from extraneous materials, shall comply with the following requirements in addition to the requirements set forth in Section 211 of the IDOT Standard Specifications for Road and Bridge Construction:

1. It shall contain not less than twelve percent (12%) or more than forty percent (40%) clay as determined in accordance with AASHTO T 88.

2. It shall contain not less than twenty-five percent (25%) or more than fifty-five percent (55%) sand as determined in accordance with AASHTO T 88.

Method of Measurement. PULVERIZED TOPSOIL MIX will be measured in place and the area computed in cubic yards.

Basis of Payment. This work will be paid at the contract unit price per cubic yard for PULVERIZED TOPSOIL MIX which price shall be payment for completing the work as specified.

ITEM NO. 9 X2110100 TOPSOIL FURNISH AND PLACE, SPECIAL

Description. Work under this item shall be performed in accordance with Section 211 of the IDOT Standard Specifications for Road and Bridge Construction, except as herein modified. This item includes work for topsoil placed at 6" depth for SODDING, SALT TOLERANT, 8" depth for restoration areas as shown on the plans or as directed by engineer.

Provide landscape site preparation as described herein.

Refer to the following which form a part of this specification.

ASTM D 422 Method for Particle Size Analysis of Soils
ASTM 699 Criteria for Soil Testing Agency

Materials. Topsoil shall be uniform in color and texture, natural, fertile, loose, friable and in good tilth; topsoil possessing characteristics of rich productive soil in the Chicago area. Topsoil shall be free from grass roots, sod, weeds, clay lumps, stiff clay, clods, roots, stones, other debris and materials and substances undesirable to plant growth. Topsoil shall not be handled in a frozen or muddy condition.

Soil shall be free of live seed and plants from invasive species including bent grass, bermuda grass, bindweed, bird's-foot trefoil, blackberry, brome grass, canada thistle, chickweed, crabgrass, cress, crown vetch, dandelion, foxtail, garlic mustard, horsetail, jimsonweed, johnson grass, lambs quarter, leafy spurge, morning glory, mustard, narrow-leaved cattail, nimble will, nutgrass, nut sedge, perennial sorrel, poison ivy, poison oak, purple loosestrife, quack grass, ragwort, reed canary grass, rush grass, spotted knapweed, sweet clover, tansy, teasel, wild parsnip.

When the topsoil has been dried at room temperature (70 degrees F) and the lumps gently disintegrated in a mortar with a wooden pestle, the residue retained on a standard No. 8 sieve shall not be more than five percent (5%) by weight. After the removal of material coarse then passing a No. 8 mesh, the topsoil shall conform to the following textural grades:

Coarse and medium sand	40-55 percent
Silt	25-50 percent
Clay	10-25 percent

Topsoil shall comply with ASTM D 5268. Topsoil shall have a pH in the range of 6.5 to 7.0 and a minimum organic content of 4%. If soil is deficient in organic matter, add enough composted bark fines to bring organic matter into specified range. When dried thoroughly at 230 degrees F,

the screened soil upon ignition shall lose in weight not less than ten percent (10%) nor more than twenty percent (20%). The mechanical analysis will be made as stated in ASTM D 422-90.

Contractors bidding on topsoil shall have the equipment necessary to process the minimum quantities required by the specification.

Notify the Commissioner 24 hours in advance of making delivery. All deliveries of topsoil which in any way fail to meet the requirements of these specifications will be rejected and the Contractor shall immediately remove such rejected topsoil from the project site and supply acceptable topsoil in its place.

General Requirements. This work includes furnishing, delivering to the site, unloading and placing topsoil in all areas designated on plans; raking and preparing the topsoil for sodding and planting as indicated in the plans. Provide tested and approved topsoil obtained from areas outside the project limits from locations approved by the Commissioner prior to its use.

Topsoil shall be obtained from suitable A Horizon topsoil sources outside of the property and shall come from naturally well drained areas, not excessively acidic or alkaline and contain no toxic substances which may be harmful to plant and lawn growth.

All areas of new landscaping and existing landscape to remain which have by the Commissioner's determination received impact of construction activities based on Contractor adjacency or utilization of areas must be restored as part of TOPSOIL FURNISH AND PLACE, SPECIAL and TOPSOIL EXCAVATION AND PLACEMENT, SPECIAL.

As directed by the Commissioner restore all project site and adjacent areas. Restoration shall include all of the following measures:

Decompaction to restore soil drainage, air infiltration, and proper root development of plants.

Decompaction of existing soil to remain for all areas to remain at grade. Decompaction of existing base soil where topsoil is to be added.

Decompaction of new subgrade or finished grade of existing soil to remain. Tilling the drainage interface between existing and furnished topsoil layers. Performance of percolation tests. Removal of non-draining soil if present. Site grading and fine grading.

Utilize only topsoil as specified in this section of the specifications.

Landscape restoration areas shall not be measured separately, but shall be incidental to the work of this item.

Submittals. The Contractor shall submit to the Commissioner, within a ten (10) day notice, proof of ownership or control of a sufficient supply to meet quantity specified of topsoil of the quality specified.

The Contractor shall submit for the Commissioner's approval, a minimum of sixty (60) days in advance of the use of topsoil on the job site, with each item labeled with the title of the project or

purchase requisition number, the following in writing. Samples with test reports unattached will be rejected.

1. The exact location of source of supply (each stockpile, if stockpiled) and approximate quantity of topsoil at the source, including the location from which the topsoil is to be obtained, the crops or plants which have been grown in the soil during the past five (5) years and the depth to which the top soil is to be taken.

2. A minimum of three (3) samples of the topsoil proposed for this work shall be furnished a minimum of ten (10) days before the use of topsoil on the job site. Each sample submitted shall be in a separate sealed container, approximately one quart in size, appropriately labeled and taken from a different location at the source. Each container shall be completely filled with uncompacted topsoil.

3. Test report from a qualified laboratory verifying compliance with specifications and suitability of topsoil for use as a growth material. Test report shall indicate particle size and chemical composition, including pH, percent of organic matter and recommendations for fertilizer and amendment. The topsoil test report shall contain the following information and conform within ranges specified herein:

		High	Low
Chemical Analysis			
	pH	7.0	6.5
Mechanical Analysis			
	% Clay	25%	10%
	% Silt	50%	25%
	% Sand	55%	40%
Additional Test Requirements			
	Organic Matter	8%	4%

Cation Exchange Capacity (CEC)
Phosphorous
Available Potassium
Calcium, Magnesium, Copper, Manganese, Zinc and Boron
Soluble Salts
Residual harmful chemicals

Soil test shall contain lab's recommendation for amending soil to meet the criteria above.

4. Certification that the material supplied does not contain hazardous materials.

5. Field Report of Penetrometer test results.

The topsoil will be inspected by the Commissioner, as delivered, and shall be permitted to take samples for testing to verify compliance with the requirements of this specification. Notify the Commissioner 24 hours in advance of making delivery.

QC/QA Requirements. The Commissioner has the right to visually inspect topsoil on site before placement. The Commissioner may ask that material suspected of not meeting specification be removed from the site, until the soil can be mechanically tested. All deliveries of topsoil which in any way fail to meet the requirements of these specifications will be rejected.

The Contractor shall immediately remove all deficient topsoil from the premises and install material meeting this specification. The Contractor shall be responsible for all costs incurred to remove deficient material and install acceptable topsoil. The Contractor shall also be responsible for any damage to plant material, or other existing or constructed elements caused by this work. No additional time will be provided in the contract to perform remedial work.

The final determination of the topsoil quality shall be based upon soil tests taken by the Commissioner. The samples shall be taken at the time of planting installation. The samples will be tested by independent accredited agencies, for the Commissioner. The test frequency shall be the same as specified herein. When one or more tests is required, the percentages of sand, silt and clay will be averaged. The average value will be used to determine the soil quality.

If the averaged test result for sand or silt content is outside the range specified by less than five percent (5%), an adjusted unit price will be used in computing payment for the topsoil. The adjusted unit price will be a percentage of the contract unit price as given in the following schedule:

Average Sand or Silt Deficiency	Percent of Contract Payment
0 to 2	80
2.1 to 4	66
4.1 to 5	50

Clay content in excess of this specification by two percent (2%) or less: If the averaged result for clay content is outside the range specified by less than two percent (2%), an adjusted unit price will be used in computing payment for the topsoil. The adjusted unit price will be sixty-six percent (66%) of the contract unit price.

Construction Requirements. Excavation and grading around tree roots, plant materials and buried utilities shall be done by hand. Refer to TREE PROTECTION specification for required procedures in protected zones. Obtain utility locations prior to excavation. Use equipment approved by the Commissioner for rough grading and spreading topsoil.

Clean plant bed areas of all trash and debris prior to planting soil placement. Remove and legally dispose of debris off site. Repair to the satisfaction of the Commissioner any portion of geotechnical fabric, drainage layers, or insulation prior to installation of topsoil.

TOPSOIL FURNISH AND PLACE, SPECIAL depths shall be as follows and as indicated on the plans:

Woody Plant Installation for Chicago Park District (Trees): 36 inches

Perennial Plant Installation and Native Savanna Seeding Areas: 15 inches

Seeding, Class 1 (restoration areas as shown on the plans): 8 inches

Sodding, Salt Tolerant: 6 inches

Decompact all planting areas prior to soil placement through use of rear-tined mechanical tiller to gently lift soil layers to depths of 12"-18" or as directed by the Commissioner. Rototilling shall result in a loosening of soil to reduce construction compaction, improve soil percolation, drainage, and tree root development. Rototill 6" interface zone between planting soil and subgrade.

All soil and all areas disturbed by construction activities, including access, egress, storage of materials, staging areas, etc. shall not be more than "slightly compacted" at time of planting or at any time after planting until the end of the plant establishment period. "Slightly compacted" soil is defined as having more than 50% of penetrometer sampling points indicating a penetration pressure of greater than 300 PSI within the top 15 inches of soil, as measured in the field when soils are fully hydrated (ideally 24 hours after soaking rain) using a manual static cone penetrometer equipped with a 30-degree circular cone tip at a sampling rate of one point per 50 feet and no fewer than 10 points per compacted area. Soil determined to be more than "slightly compacted" (i.e. having more than 50% of sample points above 300 PSI in the top 15 inches, as sampled) shall be decompacted sufficiently to meet the "slight compaction" requirement. The contractor shall submit a field report regarding the results.

Soil percolation tests shall be performed in the decompaction areas. A minimum of One (1) percolation test shall be performed on the site with additional tests occurring every 15,000 square feet of decompacted area A six (6) to eight (8) diameter hole shall be drilled to a depth of six (6) inches below the decompacted soil. Pre-soak the holes. Fill the holes with water and monitor the time it takes for the water level to drop and for the water to percolate into the decompacted soil. When percolation rates are deemed by the Commissioner to be poor or insufficient, additional measures shall be provided by the Contractor to ensure the permeability of the soil. Do not install trees and plants until percolation is approved by the Commissioner.

Fine grade and rake soil smooth to create an even surface free of pockets where water may stand and to an elevation that will allow for planting installation at finish grades indicated on plans. The removal of excess material or the addition of topsoil may be required prior to plant installation. Grading shall be to a tolerance of +/-0.10 foot of design grades. All soil shall be

settled by saturation for final grade to be considered complete. Obtain approval by the Commissioner of the fine graded areas prior to plant installation.

The surface of the topsoil after spreading and grading shall be free from clods, stones, sticks and debris, and shall conform to the lines, grades and the minimum thickness shown on the plans. One rolling of the entire surface shall be made.

Adjacent paved areas shall be kept clean as the work progresses. Soil which is brought up to the surface shall be removed promptly. All material "tracked" into other areas or adjacent streets shall be removed each day. All sidewalks and pavements shall be left in a broom-cleaned condition at the end of each day. Debris shall be transported in a manner that prevents spillage on streets or adjacent areas. City regulations regarding hauling and disposal shall apply.

Method of Measurement. TOPSOIL FURNISH AND PLACE, SPECIAL shall be measured for payment in cubic yards in place and the volume computed by the method of average end areas. Payment will not be based on load tickets. Additional material required to bring the area to subgrade elevation will not be paid for separately but considered included in the cost of this item. Additional material shall meet the approval of the Commissioner.

Existing material removed for the placement of new topsoil shall be measured for payment separately. Removal and disposal of unstable and/or unsuitable materials will be paid for at the contract unit price for NON SPECIAL WASTE DISPOSAL. Removal and re-use of existing soil shall be paid for at the contract unit price for EARTH EXCAVATION or TOPSOIL EXCAVATION AND PLACEMENT, SPECIAL.

Basis of Payment. TOPSOIL FURNISH AND PLACE, SPECIAL will be paid for at the contract unit price per cubic yard, which price shall include the cost of testing soils, furnishing and placing topsoil, raking, rolling, disking and tilling if required, and all other operations of this specification.

ITEM NO. 10 X2111100 TOPSOIL EXCAVATION AND PLACEMENT, SPECIAL

Description. Work under this item shall be performed in accordance with Section 211 of the IDOT Standard Specifications for Road and Bridge Construction, except as herein modified. 8" depth for restoration areas as shown on the plans or as directed by engineer.

Provide landscape site preparation as described herein.

Refer to the following which form a part of this specification.

ASTM D 422 Method for Particle Size Analysis of Soils
ASTM 699 Criteria for Soil Testing Agency

Materials. Topsoil shall be uniform in color and texture, natural, fertile, loose, friable and in good tilth; topsoil possessing characteristics of rich productive soil in the Chicago area. Topsoil shall be free from grass roots, sod, weeds, clay lumps, stiff clay, clods, roots, stones, other debris and materials and substances undesirable to plant growth. Topsoil shall not be handled in a frozen or muddy condition.

Soil shall be free of live seed and plants from invasive species including bent grass, bermuda grass, bindweed, bird's-foot trefoil, blackberry, brome grass, canada thistle, chickweed, crabgrass, cress, crown vetch, dandelion, foxtail, garlic mustard, horsetail, jimsonweed, johnson grass, lambs quarter, leafy spurge, morning glory, mustard, narrow-leaved cattail, nimble will, nutgrass, nut sedge, perennial sorrel, poison ivy, poison oak, purple loosestrife, quack grass, ragwort, reed canary grass, rush grass, spotted knapweed, sweet clover, tansy, teasel, wild parsnip.

When the topsoil has been dried at room temperature (70 degrees F) and the lumps gently disintegrated in a mortar with a wooden pestle, the residue retained on a standard No. 8 sieve shall not be more than five percent (5%) by weight. After the removal of material coarse then passing a No. 8 mesh, the topsoil shall conform to the following textural grades:

Coarse and medium sand	40-55 percent
Silt	25-50 percent
Clay	10-25 percent

Topsoil shall comply with ASTM D 5268. Topsoil shall have a pH in the range of 6.5 to 7.0 and a minimum organic content of 4%. If soil is deficient in organic matter, add enough composted bark fines to bring organic matter into specified range. When dried thoroughly at 230 degrees F, the screened soil upon ignition shall lose in weight not less than ten percent (10%) nor more than twenty percent (20%). The mechanical analysis will be made as stated in ASTM D 422-90.

Contractors bidding on topsoil shall have the equipment necessary to process the minimum quantities required by the specification.

General Requirements. This work includes excavating, storing, and placing re-used topsoil meeting the requirements specified in all areas designated on plans; raking and preparing the topsoil for sodding and planting as indicated in the plans. Provide tested and approved topsoil obtained from areas outside the project limits from locations preapproved by the Commissioner prior to its use.

All areas of new landscaping and existing landscape to remain which have by the Commissioner's determination received impacts of construction activities based on Contractor adjacency or utilization of areas must be restored as part of TOPSOIL FURNISH AND PLACE, SPECIAL and TOPSOIL EXCAVATION AND PLACEMENT, SPECIAL.

As directed by the Commissioner restore all project site and adjacent areas. Restoration shall include all of the following measures:

Decompaction to restore soil drainage, air infiltration, and proper root development of plants.

Decompaction of existing soil to remain for all areas to remain at grade. Decompaction of existing base soil where topsoil is to be added.

Decompaction of new subgrade or finished grade of existing soil to remain. Tilling the drainage interface between existing and furnished topsoil layers. Performance of percolation tests. Removal of non-draining soil if present. Site grading and fine grading.

Utilize only topsoil as specified in this section of the specifications.

Landscape restoration areas shall not be measured separately, but shall be incidental to the work of this item.

Construction Requirements. Excavation and grading around tree roots, plant materials and buried utilities shall be done by hand. Refer to TREE PROTECTION specification for required procedures in protected zones. Obtain utility locations prior to excavation. Use equipment approved by the Commissioner for rough grading and spreading topsoil.

Clean plant bed areas of all trash and debris prior to planting soil placement. Remove and legally dispose of debris off site. Repair to the satisfaction of the Commissioner any portion of geotechnical fabric, drainage layers, or insulation prior to installation of topsoil. TOPSOIL EXCAVATION AND PLACEMENT, SPECIAL depths shall be as follows and as indicated on the plans:

Woody Plant Installation for Chicago Park District (Trees): 36 inches Perennial Plant Installation and Native Savanna Seeding Areas: 15 inches
Seeding, Class 1 (restoration areas as shown on the plans): 8 inches
Sodding, Salt Tolerant: 6 inches

Decompact all planting areas prior to soil placement through use of rear-tined mechanical tiller to gently lift soil layers to depths of 12"-18" or as directed by the Commissioner. Rototilling shall result in a loosening of soil to reduce construction compaction, improve soil percolation, drainage, and tree root development. Rototill 6" interface zone between planting soil and subgrade.

All soil and all areas disturbed by construction activities, including access, egress, storage of materials, staging areas, etc. shall not be more than "slightly compacted" at time of planting or at any time after planting. "Slightly compacted" soil is defined as having more than 50% of penetrometer sampling points indicating a penetration pressure of greater than 300 PSI within the top 15 inches of soil, as measured in the field when soils are fully hydrated (ideally 24 hours after soaking rain) using a manual static cone penetrometer equipped with a 30-degree circular cone tip at a sampling rate of one point per 50 feet and no fewer than 10 points per compacted area. Soil determined to be more than "slightly compacted" (i.e. having more than 50% of sample points above 300 PSI in the top 15 inches, as sampled) shall be decompacted sufficiently to meet the "slight compaction" requirement. The contractor shall submit a field report regarding the results.

Soil percolation tests shall be performed in the decompaction areas. A minimum of One (1) percolation test shall be performed on the site with additional tests occurring every 15,000 square feet of decompacted area A six (6) to eight (8) diameter hole shall be drilled to a depth of six (6) inches below the decompacted soil. Pre-soak the holes. Fill the holes with water and monitor the time it takes for the water level to drop and for the water to percolate into the decompacted soil. When percolation rates are deemed by the Commissioner to be poor or insufficient, additional measures shall be provided by the Contractor to ensure the permeability of the soil. Do not install trees and plants until percolation is approved by the Commissioner.

Fine grade and rake soil smooth to create an even surface free of pockets where water may stand and to an elevation that will allow for planting installation at finish grades indicated on plans. The removal of excess material or the addition of topsoil may be required prior to plant installation. Grading shall be to a tolerance of +/-0.10 foot of design grades. All soil shall be settled by saturation for final grade to be considered complete. Obtain approval by the Commissioner of the fine graded areas prior to plant installation.

The surface of the topsoil after spreading and grading shall be free from clods, stones, sticks and debris, and shall conform to the lines, grades and the minimum thickness shown on the plans. One rolling of the entire surface shall be made.

Adjacent paved areas shall be kept clean as the work progresses. Soil which is brought up to the surface shall be removed promptly. All material "tracked" into other areas or adjacent streets shall be removed each day. All sidewalks and pavements shall be left in a broom-cleaned condition at the end of each day. Debris shall be transported in a manner that prevents spillage on streets or adjacent areas. City regulations regarding hauling and disposal shall apply.

Method of Measurement. TOPSOIL EXCAVATION AND PLACEMENT, SPECIAL will be measured for payment in cubic yards in its original position and the volume computed by the

method of average end areas. Payment will not be based on load tickets. Additional material required to bring the area to subgrade elevation will not be paid for separately but considered included in the cost of this item. Additional material must meet the approval of the Commissioner.

Basis of Payment. TOPSOIL EXCAVATION AND PLACEMENT, SPECIAL will be paid for at the contract unit price per cubic yard, which price shall include the cost of testing soils, removal, storage, and placement of reused existing topsoil, raking, rolling, disking and tilling if required, and all other operations of this specification.

ITEM NO. 15 CDOT2530020 PARKWAY AND TREEPIT TREES

Effective: February 1, 2010
Revised: May 3, 2016

Description. Work under this item shall be performed according to Section 253 of the IDOT Standard Specifications for Road and Bridge Construction, except as herein modified.

Materials. Materials shall be according to the following Articles of Division 1000 – Materials of the Standard Specifications except as herein modified:

	Article/Section
(a) Materials for Planting……..	1081.01
(b) Topsoil…….	1081.05(a)
(c) Shredded Hardwood Mulch……..…	.1081.06(b)

Trees
Nursery stock shall comply with American Standard for Nursery Stock ANSI Z60.1- 2014 (or latest edition). All trees shall be selected and tagged with a seal by Streets and Sanitation Bureau of Forestry ("BOF") or CDOT Foresters.

Backfill

New Construction

Backfill for new construction sites shall consist of Pulverized Topsoil.

Existing sites

Backfill shall be a variable mixture, dependent upon the material. To avoid interfaces created by adjacent dissimilar soils with different textures, structures and organic matter, utilize soil from the existing site as backfill. Or, if existing soil is of poor quality, backfill shall be a mixture of ½ excavated soil, and ½ pulverized top soil, as specified. The two soils shall be adequately mixed. Subsoils will not be allowed as backfill.

Pulverized Topsoil
Pulverized topsoil shall comply with requirements set forth in Section 211 of the IDOT Standard Specifications for Road and Bridge Construction except as herein modified:

1. Pulverized topsoil shall contain not less than twelve percent (12%) or more than forty percent (40%) clay as determined in accordance with AASHTO T 88.

2. Pulverized topsoil shall contain not less than twenty-five percent (25%) or more than fifty-five percent (55%) sand as determined in accordance with AASHTO T 88.

Staking and guying materials: (per Commissioner direction only)

1. Stakes: 6’ fence T-Post.
2. Guy Wire: Galvanized mild steel wire, minimum 12 gauge; provide double strands.
3. Hose: Rubber or plastic garden hose.
4. Turnbuckles: Aluminum or galvanized steel.
5. Warning flaps: Fluorescent orange plastic surveyor’s tape.

Tree wrap tape

Nurseryman’s standard protective tape.

General Requirements.

Plant Delivery, Storage and Handling:

1. Schedule delivery to avoid storage on site. All plant roots and earth balls shall be kept damp and thoroughly protected from sun and drying winds at all times during transportation and on the ground until the final operation of planting is completed. If planting does not occur immediately, store plants in a location protected from sun, weather and theft.
2. Deliver freshly dug balled and burlapped stock unless otherwise approved.
3. Cover to protect stock during transport. Plant material transported without cover shall be automatically rejected.
4. Bind stock to protect branches, bark, and overall shape during transport.
5. Load and unload trees with care. Protect tree trunks prior to loading and unloading. Do not lift trees by wire basket or trunk.
6. Do not prune trees unless directed by the Commissioner.

Pulverized Topsoil Handling

Pulverized topsoil shall be stored in stockpiles at the producer’s or supplier’s facility and shall be protected from erosion, absorption of excess water, and contamination at all times. Delivery to the job site shall only occur after the Commissioner has reviewed and approved the testing results.

Preparation and Execution

1. Installation cannot begin until the final grade has been achieved and soil has settled for a minimum of one week or as directed by Commissioner.
2. The Contractor shall be responsible for all plant layout. Qualified personnel must perform the layout as shown in the landscape plan. Otherwise, trees planted in the parkway shall be planted in the center of the parkway, and/or in line with existing trees in the parkway. The tree locations must be marked by staking. Trees planted in tree pits

shall be planted in the center of the tree pit. The Commissioner will approve the layout prior to installation.

Planting Trees

1. Tree planting method shall be approved by Commissioner or Authorized Representative prior to full scale installation.
2. All trees shall be planted completely, before leaving the planting location. Trees shall not be allowed to remain above ground at the planting site. Planting holes shall not be left excavated and open beyond the accepted hours of operation, i.e. 7:00 a.m - 3:00 p.m., Monday thru Friday, unless directed otherwise by the Commissioner.

Submittals.

1. Soil Laboratory Test
2. Soil sample in 1 quart sealed plastic container.
3. Shredded hardwood bark mulch sample in 1 quart sealed plastic container.
4. Request for Material Inspection Nursery Tree.
5. Tree wrap – sample
6. Pre-emergent herbicide-Material Safety Data Sheet
7. Permits- CDOT Right of Way permit and BOF permit

Construction Requirements.

Parkway Trees (Sodded or Mulched)

Excavation

1. Excavation shall occur at the time of tree planting. The excavation for planting in a Parkway shall be of sufficient depth to accommodate the tree root ball and shall be a minimum of twice (two times) the diameter of the root ball or as directed by the Commissioner or Authorized Representative.

2. The depth of the hole shall be such that the top of the root flare must be exposed and visible above grade. The sides shall slope gradually making the hole saucer shaped.
3. All soil shall be stockpiled for reuse or as otherwise directed (see Backfill).
4. Remove all excavated subsoil from the site and dispose of legally. Do not backfill excavation with subsoil.

Planting

1. The existing nursery line on the tree shall expose the root flare above ground level upon completion of the planting operation. Trees planted with the nursery line below such level will not be accepted.
2. Untie all cords binding burlap to trunk. Remove all burlap and wire baskets from top 1/3 of the root ball.
3. Place backfill in 6" inch-thick layers. Work each layer by hand to compact backfill and eliminate voids. Maintain plumb during backfilling.

4. When backfilling is approximately 2/3 complete, saturate backfill with water and repeat until no more can be absorbed.

5. Place and compact remainder of backfill and water again.

6. Form watering basin around trunk with backfill holding at least 10 gallons.

7. Once soil has settled, add 3 inches of mulch in a 6' diameter saucer in Sodded Parkways or to the entire Mulched Parkway area. Mulch shall not be piled against the tree trunk.

Staking and Guying (per Commissioner Directive Only):

Guy and stake trees the same day as planting. Embed stakes 2 feet into grade. Tie with length of rubber of plastic hose to prevent wire loop from contracting tree trunk. Adjust to provide firm but not rigid support. Place guy wire equally spaced around trunk, with top of guy wire 6 to 7 feet above grade, and at 45-degree angle to vertical. Provide one turnbuckle per guy. Securely tie caution tape at the 1/3 and 2/3 points of each guy wire.

Tree pit Trees

Excavation

1. Where tree grates are present, Contractor shall remove tree grate using due and reasonable care not to damage tree grate. Tree grates shall be replaced upon completion of planting operation. Contractor shall be held responsible for any damage to tree grates and shall replace tree grates, when damaged, at no cost to the City.

2. Excavation of tree pits shall occur at the time of tree planting. Excavated tree pits shall not be left open. Excavation for tree pits shall include the removal of soil from the pits to a depth of at least three (3) feet and no more than three and one half (3-1/2) feet with vertical sides at the edge of the pit. Excavate with sides vertical, bottom flat but with high center for drainage. Deglaze sides and loosen bottom.

3. The diameter of the hole shall be 1 foot wider than the root spread. The depth of the hole shall be such that the top of the root ball is slightly higher than soil level (see Drawings).

4. Remove all excavated subsoil from the site and dispose of legally. Do not backfill excavation with subsoil.

5. All soil shall be stockpiled for reuse or as otherwise directed (see Backfill).

Planting

1. For trees with grates, set plants on sub grade in excavation with graft and flare of root ball slightly higher than soil level in pit allowing space for Volcanic rock and tree grate. (See Drawings and CAST IRON TREE GRATE, Materials under grate.)

2. For trees without grates, set plants on sub grade in excavation with graft and flare of root ball slightly higher than soil level in pit. Place three inch mulch layer around trees.
3. Untie all cords binding burlap to trunk. Remove all burlap and wire baskets from top 1/3 of the root ball.
4. Place backfill in 6" inch-thick layers. Work each layer by hand to compact backfill and eliminate voids. Maintain plumb during backfilling.
5. When backfilling is approximately 2/3 complete, saturate backfill with water and repeat until no more can be absorbed.
6. Place and compact remainder of backfill and water again with a minimum of 10 gallons of water.

Pruning (as directed by Commissioner)

Remove dead or broken branches. Make cuts with sharp instruments outside the branch collar. Equipment shall be sterilized between cuts. Do not remove leaders from trees. All pruning must be performed under the direct supervision of a certified arborist.

Protection of tree trunks

Inspect and, if necessary, treat trunks for physical damage or insect infestation.
Wrap trunks of smooth barked trees. Apply tree wrap in November and remove in April.

6" diameter corrugated black plastic pipe will be placed around tree trunks in 36" lengths as directed by the Commissioner at sites where herbivorous animals are likely to inhabit. Sites include park like areas, river embankments, and prairie restoration sites, or as determined by the Commissioner. Herbivorous animals include, but not limited to, beaver, rabbits, voles, and mice.

Mulch

Contractor shall make inspections of Mulched Parkways periodically (every six months during the period of establishment as specified) to ensure that level of mulch has been maintained.

Pre-emergent weed control

Pre-emergent weed control shall be applied to each tree pit or parkway mulch prior to mulch application.

QC/QA Requirements.

All plants shall be obtained from Illinois Nurserymen's Association or appropriate state chapter nurseries, in hardiness zones of comparable local climatic range to the City of Chicago and approved by the Commissioner or Authorized Representative. All trees shall be dug prior to leafing out (bud break) in the spring or when plants have gone dormant in the fall, except for the following species which are only to be dug prior to leafing out in the spring: (The Commissioner reserves the right to expand this list upon submittal of the Planting Schedule.)

1. Pyrus calleryana (Ornamental Pear)
2. Quercus (Oaks)
3. Robinia (Black Locust)
4. Syringa reticulata (Japanese Tree Lilac)
5. Ulmus 'Frontier' (Frontier elms)

Inspections:

The Commissioner will inspect plant materials at the nurseries prior to being delivered on site. This will be done via the Request for Material Inspection Nursery Tree ("RFINT") sheets. These sheets must be turned in to the CDOT Division of Engineering at least **6 weeks** prior to the expected date of installation. No trees shall be delivered without CDOT Seal. Plant material not installed within 60 days of initial inspection will be required to be re-inspected.

An inspection on site will be made prior to the installation of plant material. Any plant material not meeting specification (that being of good health) must be moved off the site.

Period of Establishment

Prior to being accepted, the plants shall endure a period of establishment in accordance with section 253.14 of the Standard Specifications except that the period of establishment will be two (2) years.

Method of Measurement. PARKWAY AND TREEPIT TREES will be paid for at the contract price per each, which price shall include furnishing and installing the plant material of the type and size specified, and all materials, equipment and labor necessary to complete the work. Also included with these items is all initial maintenance as described.

Basis of Payment. This work will be paid for at the contract unit price per each.

ITEM NO. 26 30300112 AGGREGATE SUBGRADE IMPROVEMENT 12"

Effective: February 22, 2012
Revised: November 1, 2014

Add the following Section to the Standard Specifications:

"**SECTION 303. AGGREGATE SUBGRADE IMPROVEMENT**

303.01 Description. This work shall consist of constructing an aggregate subgrade improvement.

303.02 Materials. Materials shall be according to the following.

Item	Article/Section
(a) Coarse Aggregate	1004
(b) Reclaimed Asphalt Pavement (RAP) (Notes 1, 2 and 3)	1031

Note 1. Crushed RAP, from either full depth or single lift removal, may be mechanically blended with aggregate gradations CS 01 or CS 02 but shall not exceed 40 percent of the total product. The top size of the Coarse RAP shall be less than 4 in. (100 mm) and well graded.

Note 2. RAP having 100 percent passing the 1 1/2 in. (37.5 mm) sieve and being well graded, may be used as capping aggregate in the top 3 in. (75 mm) when aggregate gradations CS 01 or CS 02 are used in lower lifts. When RAP is blended with any of the coarse aggregates, the blending shall be done with mechanically calibrated feeders.

Note 3. The RAP used for aggregate subgrade improvement shall be according to the current Bureau of Materials and Physical Research Policy Memorandum, "Reclaimed Asphalt Pavement (RAP) for Aggregate Applications".

303.03 Equipment. The vibratory machine shall be according to Article 1101.01, or as approved by the Engineer.

303.04 Soil Preparation. The stability of the soil shall be according to the Department's Subgrade Stability Manual for the aggregate thickness specified.

303.05 Placing Aggregate. The maximum nominal lift thickness of aggregate gradations CS 01 or CS 02 shall be 24 in. (600 mm).

ITEM NO. 27 CDOT3110020 STRUCTURAL SOIL

Effective: February 1, 2009
Revised: January 1, 2015

Description. Work under this item shall consist of furnishing and placing STRUCTURAL SOIL to meet elevations as specified on the plans and be performed in accordance with Granular Subbase, Type B, Section 311 of the Standard Specification for Road and Bridge Construction, except as herein modified. Structural soil is designed to function as a sub-base material under sidewalk as well as a growing media outside of the tree planting areas.

Materials. A uniformly blended mixture of coarse aggregate, soil and a type of hydrogel consisting of potassium propenoate-propenamide copolymer crystals ("PPPC") mixed to the following proportion:

Component	Composition
Angular non-limestone Aggregate	80-84% of total wet weight
Soil	16-20% of total wet weight
PPPC	12 oz./ cubic yard
Total moisture	8.5% – 11.0% of total weight (Determined by AASHTO T 265)

Materials shall be according to the following notes:
(a) The non-limestone aggregate shall be a uniformly graded ¾"- 1½" angular crushed stone with no more than 10% passing the ½" sieve as determined by AASHTO T 27.

(b) The soil shall be a "clay loam" based on the "USDA classification system" and also meet the mechanical analysis requirements detailed below as determined by a mechanical analysis using method ASTM D 422. The soil shall be of uniform composition, without admixture of subsoil. The soil shall be the product of a commercial processing facility specializing in production of stripped natural topsoil.

Mechanical analysis:

Soil Components	% of total weight
Gravel	< 5%
Sand	25 - 45%
Silt	15 - 60%
Clay	20- 40%

Chemical analysis: Meet or be amended to meet the following criteria.

pH	6.5 - 7.5	(ASTM D 4972)
Organic Content	2 - 5%	(AASHTO T 194)

(a) The type of hydrogel shall be a non-toxic, non-phytotoxic tackifier consisting of PPPC.

Equipment. The soil components shall be spread in layers (Aggregate, PPPC, Clay Loam) on a clean, paved surface at the supplier's facility. The components shall be folded and mixed with front end loaders until uniformly blended.

General Requirements. STRUCTURAL SOIL shall be stored in stockpiles at the producer's or supplier's facility and be protected from erosion, absorption of excess water, and contamination at all times. Delivery to the job site shall only occur after the Commissioner has reviewed and preliminarily approved the testing results obtained by the supplier's certified laboratory as detailed in the Quality Control (QC) Requirement section. Final acceptance will be determined by the Commissioner after delivery to the site has been completed and after all Quality Assurance (QA) testing has been completed, if deemed necessary by the Commissioner.

A mechanical and chemical analysis shall be performed on the soil mix sample and the results shall fall within the above-referenced limits. The coarse aggregate must also be tested for gradation and shall meet the requirements as detailed above. The mechanical analysis may be completed prior to performing the chemical analysis. If the results of the mechanical analysis are within the specified limits, then a chemical analysis shall be performed on the soil mix sample to determine if the results fall within the specified limits.

Submittals. Upon the completion of all mechanical and chemical analyses, a final report prepared by the certified testing laboratory (according to the QC Requirements section) detailing these results shall be submitted to the Commissioner for review. The final report shall include the project number, project name, source of material, and quantity of material represented by the samples. A sealed, 1 quart container sample shall be submitted to the Commissioner for approval.

Construction Requirements. Locate and confirm the location of all underground utility lines and structures prior to the start of any excavation. Complete all walls, curb footings, and utility work in the work area prior to installing the STRUCTURAL SOIL.

Excavate and compact the proposed subgrade to depths, slopes and widths as shown on the contract plans. Confirm that the subgrade is at the proper elevation and compacted as required. Subgrade elevations shall slope parallel to the finished grade and or toward the subsurface drain lines as shown on the drawings. Verify that subgrade is adequately graded and compacted prior to placement. Notify the Commissioner of any subsurface conditions which will affect the Contractor's ability to complete the work.

Clear the excavation of all construction debris, trash, rubble and any foreign material. In the event that fuels, oils, concrete washout, silts or other material harmful to plants have been spilled into the subgrade material, excavate the soil sufficiently to remove the harmful material. Fill any

over excavation with approved fill and compact to the satisfaction of the engineer. The cost of this work is incidental to this item.

Do not deliver or place soils in frozen, wet, or muddy conditions. Do not deliver or place materials in an excessively moist condition. Stockpiling of material on site will be limited to an amount of material that can be used within a reasonable time period and must be approved by the Commissioner.

Protect soils and mixes from absorbing excess water and from erosion at all times. Do not store materials unprotected from large rainfall events. Do not allow excess water to enter site prior to compaction. If water is introduced into the material after grading, allow material to drain or aerate to within the required moisture content range. Do not install in rainy conditions.

Protect adjacent walls, walks and utilities from damage or staining by the soil. Use 1/2" plywood and or plastic sheeting as directed to cover existing concrete, metal and masonry work and other items as directed during the progress of the work. Any damage to adjacent facilities incurred during the installation of structural soil shall be repaired incidental to this item.

Install and compact STRUCTURAL SOIL in six inch lifts and bring to finished grades as shown on the contract plans. Immediately protect the STRUCTURAL SOIL from contamination by toxic materials, trash, debris, water containing cement, clay, silt or materials that will alter the particle size distribution of the mix with plastic or plywood as directed by the Commissioner.

Clean up work area at the end of each working day. Do not track soil from the site onto adjacent property and the public right of way. Upon completion of the of this work, remove all excess fills, soils and mix stockpiles and legally dispose of all waste materials, trash and debris. Remove all tools and equipment and provide a clean, clear site. Sweep, do not wash surfaces of dirt and mud until sidewalk has been installed over the STRUCTURAL SOIL.

Quality Control Requirements. At least 14 days prior to installation, the Contractor shall submit to the Commissioner a copy of the supplier's material test reports for the specific batch of material to be delivered. No materials shall be ordered until the required submittals have been reviewed and approved by the Commissioner. Approval shall not constitute final acceptance. The Commissioner reserves the right to reject, on or after delivery, any material that does not meet these specifications.

All testing shall be completed by laboratories that are either AASHTO certified or certified under the Illinois Soil Testing Association's Laboratory Proficiency Testing Program to perform the testing as detailed above. Mechanical testing and chemical testing may be completed by

different laboratories as long as each laboratory is certified to perform the tests for which they have provided results.

Method of Measurement. STRUCTURAL SOIL will be measured in place and the volume computed in cubic yards.

Basis of Payment. Structural Soil will be paid for at the contract unit price per cubic yard for STRUCTURAL SOIL.

ITEM NO. 28 CDOT3110010 SAND CUSHION, VARIABLE DEPTH

Effective: August 1, 2008
Revised: July 1, 2010

Description. Work under this item shall be performed according to Section 311 of the IDOT Standard Specifications for Road and Bridge Construction, except as herein modified.

This work shall consist of placing sand cushion of variable depth beneath proposed sidewalks, driveways, or other appurtenances as directed by the Commissioner.

Materials. Materials shall be a fine aggregate meeting the requirements of Article 1003.04.

General Requirements. If unstable or unsuitable subbase conditions are encountered after excavation to proposed subbase elevations, the Commissioner may require removal and replacement of this unsuitable material with sand cushion.

Construction Requirements. The method for placement and compaction of the sand cushion shall be to the satisfaction of the Commissioner.

Method of Measurement. This work will be measured for payment in place in cubic yards.

Basis of Payment. This work will be paid for at the contract unit price per cubic yard for SAND CUSHION, VARIABLE DEPTH.

ITEM NO. 30 CDOT3530100 TEMPORARY PAVEMENT

Description. This work shall consist of constructing a temporary pavement and removing temporary pavement at the locations shown on the plans or as directed by the Engineer.

The Contractor shall use either Portland cement concrete (PCC) according to Sections 353 and 354 of the Standard Specifications or hot-mix asphalt (HMA) according to Sections 355, 356, 406 of the Standard Specifications, and other applicable PCC and HMA special provisions as contained herein. The HMA mixtures to be used shall be specified in the plans. The thickness of the Temporary Pavement shall be as described in the plans. The Contractor shall have the option of constructing either material type.

The Contractor shall furnish and construct Subbase Granular Material, Type B 4" under the temporary pavement in accordance with the Standard Specifications. The Temporary Pavement shall remain in place, unless otherwise noted on the plans or as directed by the Commissioner, and if so, the removal shall conform to Section 440 of the Standard Specification.

Method of Measurement. TEMPORARY PAVEMENT will be measured in place and the area computed in square yards for installation of TEMPORARY PAVEMENT. Subbase Granular material, Type B 4" and removal of Temporary Pavement when directed by the Commissioner will be considered included in pay item TEMPORARY PAVEMENT and will not be measured for pavement.

Basis of Payment. This work will be paid for at the contract unit price per square yard for TEMPORARY PAVEMENT.

ITEM NO. 38 CDOT 4060105 HOT-MIX ASPHALT SURFACE COURSE, IL-9.5L, MIX "C", N30 (CDOT)

Effective: December 6, 2016

Revised: August 16, 2017

Description. Work under this item shall consist of constructing an IL-9.5L asphalt surface course. Work shall be according to the requirements for an IL-9.5L mixture per Sections 406 and 1030 of the IDOT Standard Specifications for Road and Bridge Construction (SSRBC), except as herein modified.

Materials.

Coarse Aggregate. Coarse Aggregate shall meet the requirements of Article 1004.03 of the SSRBC except as herein modified. Aggregates shall be Class C quality or better Gravel, Crushed Gravel, Carbonate Crushed Stone, Crystalline Crushed Stone, or Recycled Crushed Concrete.

Fine Aggregate. Fine Aggregate shall meet the requirements of Article 1003.03 of the SSRBC except as herein modified. Gradation shall be FM01, FM02, FM20, or FM22. In addition, FM22 Recycled Crushed Concrete may be used if approved by the Engineer.

Reclaimed or Recycled Material.

(a) Only processed FRAP and RAS will be permitted in the IL-9.5L mix. Reclaimed or recycled material shall be according to the current Special Provision for RECLAIMED ASPHALT PAVEMENT AND RECLAIMED ASPHALT SHINGLES (D-1).

(b) Recycled Crushed Concrete shall be produced in accordance with the requirements of the Aggregate Gradation Control System (AGCS). The source, quality control plan, and product shall be approved by the Engineer. Gradation will be FM22 or CM16

Mixture Design.

1030.04(b) Volumetric Requirements. Revise the table in Article 1030.04(b)(2) to read:

VOLUMETRIC REQUIREMENTS Low ESAL				
Mixture Composition	Design Compactive Effort	Design Air Voids Target %	VMA (Void in the Mineral Aggregate), % min.	VFA (Voids Filled with Asphalt Binder), %
IL-9.5L	N_{DES}=30	3.0	15	65-78*

* If the maximum design VFA value is exceeded, but the Hamburg Wheel Test criteria has been met, the VFA will be considered acceptable.

Revise the first sentence of Article 1030.04(d) Verification Testing to read:

"Low ESAL mix designs submitted for verification will be tested to ensure that the resulting mix designs will pass the required criteria for the Hamburg Wheel Test (Illinois Modified AASHTO T 324) and the Tensile Strength Test (Illinois Modified AASHTO T 283)."

Replace Article 1030.04(d)(1) Hamburg Wheel Test Criteria with the following:

"The maximum allowable rut depth shall be 0.5 in. (12.5 mm). The minimum number of wheel passes at the 0.5 in. (12.5 mm) rut depth criteria shall be 10,000 passes. Test specimens shall be compacted to an air void content of 6.0% ± 1.0%"

Delete the table "Illinois Modified AASHTO T 324 Requirements", however, Note 1/ shall still apply to Hamburg specimens when a Warm Mix additive has been added to the mixture.

Mix Design Verification. The Commissioner will verify the mix design according to the D1 Mix Verification Procedure and the RECLAIMED ASPHALT PAVEMENT AND RECLAIMED ASPHALT SHINGLES (D-1) Special Provision.

If a Warm Mix Additive is used, the Substitution of Warm Mix Asphalt for Hot Mix Asphalt (CDOT) special provision shall also apply.

QC/QA Requirements. Shall be according to Article 1030.05, except the required density shall be according to the IDOT Bureau of Local Roads and Streets Special Provision, LR 1030, SPECIAL PROVISION FOR GROWTH CURVE, revised January 1, 2010, except as herein modified.

Revise the first sentence of the second paragraph of LR 1030 to read:

"The Contractor shall perform a growth curve at the beginning of placement of each type of mix for each lift on each day of placement, unless directed otherwise by the Commissioner."

Revise the first sentence of the fifth paragraph of LR 1030 to read:

"Daily core samples are not required, and shall only be taken when requested by the Commissioner."

Replace the last sentence of the sixth paragraph of LR 1030 with the following:

> "An average nuclear gauge density results shall be based on all tests across the mat, including all confined longitudinal joint density tests, at each test location. Unconfined longitudinal density tests will be evaluated separately as detailed above. Each location shall consist of five tests across the mat including both longitudinal joint density tests, unless directed otherwise by the Commissioner."

Revise the first sentence of the seventh paragraph of LR 1030 to read:

> "Quality Control density tests shall be performed at randomly selected locations within ¼ mile intervals per lift per lane."

Basis of Payment. Shall be according to Article 406.14, except as herein modified.

This work will be paid for at the contract unit price per ton (metric ton) for **HOT-MIX ASPHALT SURFACE COURSE, IL-9.5L, MIX "C", N30 (CDOT).**

ITEM NO. 40 CDOT4240010 - PORTLAND CEMENT CONCRETE SIDEWALK 5 INCH

Effective: December 1, 2008
Revised: July 1, 2010

Description. Work under this item shall be performed according to Section 424 of the IDOT Standard Specifications for Road and Bridge Construction, except as herein modified.

Construction Requirements. This work shall be constructed according to current City of Chicago Department of Transportation ADA Standards. Construction of ADA ramps will be paid for separately.

Basis of Payment. This work will be paid for at the contract unit price per square foot for PORTLAND CEMENT CONCRETE SIDEWALK 5 INCH.

ITEM NO. 41 CDOT4240040 - PORTLAND CEMENT CONCRETE ADA RAMP 8-INCH

Effective: December 1, 2008
Revised: July 1, 2010

Description: Work under this item shall be performed according to Section 424 of the IDOT Standard Specifications for Road and Bridge Construction, except as herein modified.

Construction Requirements: This work shall be constructed according to current City of Chicago Department of Transportation ADA standards.

Method of Measurement: This work will be measured for payment in place in square feet. It will include the side curbs, side flares, level landing area, ramps and the sidewalk constructed between adjacent ramps within the corner radius.

Basis of Payment: This work will be paid for at the contract unit price per square foot for PORTLAND CEMENT CONCRETE ADA RAMP, 8-INCH. DETECTABLE WARNING TILES required for this work will be paid for separately.

ITEM NO. 47 CDOT4400010 HOT-MIX ASPHALT SURFACE REMOVAL, VARIABLE DEPTH

Effective: May 15, 2009
Revised: July 1, 2010

Description. Work under this item shall be performed according to Section 440 of the IDOT Standard Specifications for Road and Bridge Construction, except as herein modified.

This work shall consist of the removal of hot-mix asphalt (HMA) surfaces, including adjacent Portland cement concrete pavement, trenches, and patches, in preparation for subsequent resurfacing as shown in the plans and as directed by the Commissioner.

Construction Requirements. Prior to the start of grinding operations, all open lid structures shall be protected to prevent any grinding debris from entering the structure. Any debris entering structures shall be immediately removed and the entire structure shall be cleaned at no cost to the City.

Method of Measurement. This work will be measured for payment in square yards. No adjustment will be made for variations in the depth of material removed.

Basis of Payment. This work will be paid for at the contract unit price per square yard for HOT-MIX ASPHALT SURFACE REMOVAL, VARIABLE DEPTH.

ITEM NO. 51 CDOT5010010 REMOVAL OF EXISTING STRUCTURES

Effective: August 1, 2008
Revised: May 28, 2009

Description. Work under this item shall consist of removing existing structure(s) at the location(s) designated on the plans. Work under this item shall be performed according to Section 501 of the IDOT Standard Specifications for Road and Bridge Construction, except as herein modified.

Submittals. A proposal plan for the removal of the structure(s) shall be submitted to the Commissioner for review and approval, at least 14 days prior to the beginning of the removal work. The removal of existing structures shall not commence without the Commissioner's approval.

The submittal shall show the procedures, equipment, haul routes, disposal site, and sequence of removal. The submittal shall include a written description of the proposed sequence of removal and the methods to be employed in the removal operations. Further, the submittal shall include calculations, drawings and details of the sequence of removal of the existing structures and locations of any temporary supports or bracing, the anticipated loads and the step-by-step removal procedure. The submittal shall also identify the location of disposal for the items removed. The removal procedure shall result in a safe and stable structure at all times, and shall comply with all safety requirements as required by all City, State and Federal laws, codes or other regulations. The submittal shall be sealed by an Illinois licensed Structural Engineer.

Method of Measurement. Removal of existing structure(s) at the location(s) designated on the plans will be included for payment unless it is specifically included with a separate pay item.

Basis of Payment. This work will be paid at the contract unit price per Lump Sum for REMOVAL OF EXISTING STRUCTURES.

ITEM NO. 52 CDOT5010030 CONCRETE REMOVAL

Effective: January 1, 2009

Description. Work under this item shall be performed according to Section 501 of the IDOT Standard Specifications for Road and Bridge Construction, except as herein modified.

General Requirements. Only the use of hand sledges and pneumatic hand tools will be permitted to break out concrete. The use of frost balls, drop hammers, explosive and other means employing heavy inertial or explosive forces will be prohibited, unless permitted in writing by the Commissioner.

Method of Measurement: Removal of existing concrete shall be measure for payment in place, computed in cubic yards.

Basis of Payment: The work will be paid for at the contract unit price per cubic yard for CONCRETE REMOVAL.

ITEM NO. 59 50300285 FORM LINER TEXTURED SURFACE

Description

This work shall consist of designing, developing, furnishing and installing form liners and forming concrete using reusable, high-strength urethane form liners to achieve the various concrete treatments as shown in the plans. Form lined surfaces shall include areas of wall facings, where shown in the plans. The form liner pattern used for each wall type may vary to convey a uniform appearance as indicated on the plans. This Work shall also be performed in accordance with applicable portions of Section 503 of the Standard Specifications.

Form liners shall be installed 12" below finish grade unless otherwise shown on the plans. The form liner shall match the exact size of concrete units and adhere to the provisions listed herein and in the Plans. The form liner stone module is to be integrated into the specified surfaces such that there are no joints crossing the stone modules.

Fabricator Requirements

The form liner manufacturers included herein have been pre-approved to provide form liners. Other manufacturer's products will be considered, provided sufficient information is submitted 30-days prior to use to allow the Commissioner to determine that products proposed are equivalent to those named. All manufacturers of form liners shall adhere to the provisions listed herein and in the Plans.

Shop Drawings

Shop drawings of the concrete facing patterns shall be submitted for each area of textured concrete. Shop drawing submittals shall include:

1. Individual form liner pattern descriptions, dimensions, and sequencing of form liner sections. Include details showing typical cross sections, joints, corners, step footings, stone relief, stone size, pitch/working line, mortar joint and bed depths, joint locations, edge treatments, and any other special conditions.
2. Elevation views of the form liner panel layouts for the texture showing the full length and height of the structures including the footings with each form liner panel outlined. The arrangement of the form liner panels shall provide a continuous pattern of desired textures and colors with no interruption of the pattern made at the panel joints.

The Contractor shall submit shop drawings for the form liner pattern. The Contractor shall also submit a Concrete Mockup sample to the Commissioner for approval. The sample may be produced of concrete or an alternative material, but shall be no smaller than 2 ft by 2 ft representative sample of the pattern.

Materials

Form liners shall be high quality, highly reusable and capable of withstanding anticipated concrete pour pressures without causing leakage or causing physical defects. Form liners shall attach easily to pour-in-place forms and be removable without causing concrete surface damage or weakness in the substrate. Liners used for the texture shall be made from high-strength elastomeric urethane material which shall not compress more than 0.02 feet when poured at a rate of 10 vertical feet per

hour. Form release agents shall be non-staining, non-residual, non-reactive and shall not contribute to the degradation of the form liner material. Forms for smooth faced surfaces shall be plastic coated or metal to provide a smooth surface free of any impression or pattern. If the contractor elects to use form ties for concrete forming, only fiberglass form ties will be permitted. Use of removable metallic form ties will not be allowed.

Store concrete stain materials in an area where temperatures will not be less than 50°F (10°C) or more than 100°F (38°C) and in accordance with OSHA and local Fire Code Requirements.

Deliver materials in original and sealed containers, clearly marked with the manufacturer's name, brand name, type of material, batch number, and date of manufacture.

QUALIFICATIONS OF CONTRACTOR

The concrete stain applicator shall have a minimum of one (1) year demonstrated experience in applying stains. The Contractor shall submit evidence of appropriate experience, job listings, and project photographs from previous work.

CAST-IN-PLACE CONCRETE

The following form liner manufacturers have been pre-approved to provide the listed pattern for the limestone surface form liner for use with the cast-in-place concrete units.

a. Custom Rock International, St. Paul, MN (Jim Rogers; 800-637-2447) #1102 Rectangular Cut Stone (24").
b. Milestone Incorporated, Hudson, WI (Paul Nasvik; 715-381-9660) MS-#1012 24" weathered Limestone.
c. Architectural Polymers, Palmerton, PA (Corporate Office; 610-824-3322) (Local Representative: Brent Schmitt; 773-523-5718) #896 24" Quarry Stone

Other manufacturer's products will be considered, provided sufficient information is submitted 30-days prior to use to allow the Commissioner to determine that products proposed are equivalent to those named.

All manufacturers of form liners shall fabricate form liners to match the provisions listed herein and in the Plans. The form liner stone module is to be integrated into the face panel such that there are no joints crossing the stone modules.

The relief shall be 2 ½" average to 4½" maximum.

A pattern "exhibit A" is provided below, illustrating the appearance desired.

Exhibit A- Cast-in place Pattern

INSTALLATION

Form liners shall be installed in accordance with the manufacturer's recommendations to achieve the highest quality concrete appearance possible. Form liners shall withstand concrete placement pressures without leakage causing physical or visual defects. A form release agent shall be applied to all surfaces of the liner which will come in contact with concrete as per the manufacturer's recommendations. After each use, liners shall be cleaned and made free of build-up prior to the next placement, and visually inspected for blemishes or tears. If necessary, the form liners shall be repaired in accordance with the manufacturer's recommendations. All form liner panels that will not perform as intended or are no longer repairable shall be replaced. An on-site inventory of each panel type shall be established based on the approved form liner shop drawings and anticipated useful life for each form liner type.

The liner shall be securely attached to the forms according to the manufacturer's recommendations. Liners shall be attached to each other with flush seams and seams filled as necessary to eliminate visible evidence of seams in cast concrete. Liner butt joints shall be blended into the pattern so as to create no visible vertical or horizontal seams or conspicuous form butt joint marks. Liner joints must fall within pattern joints or reveals. Finished textures shall be continuous without visual disruption and properly aligned over adjacent and multiple liner panels. Continuous or single liner panels shall be used where liner joints may interrupt the intended pattern. Panel remnants shall

not be pieced together. At locations where differing form liner patterns abut, such as when a cast-in-place pattern should connect to a precast concrete wall pattern, a vertical 6-inch wide smooth finish transition strip without relief shall be provided at the abutting ends of each wall to separate the two dissimilar patterns. This transition strip shall also be introduced at appropriate corner sections of all patterned wall systems.

When the top of cast-in-place, precast or gravity type retaining walls are exposed, a 12-inch high smooth finish strip without relief shall be provided along the top of the vertical wall surface. A ¾" chamfer shall be provided on the top edges of the wall and on edges between the smooth finish strip and form liner pattern changes.

The Contractor shall coordinate concrete pours to prevent visible differences between individual pours or batches. Concrete pours shall be continuous between construction or expansion joints. Cold joints shall not occur within continuous form liner pattern fields. Wall ties shall be coordinated with the liner and form to achieve the least visible result. Liners shall be stripped between 12 and 24 hours as recommended by the manufacturer. Curing methods shall be compatible with the desired aesthetic result. Use of curing compounds will not be allowed. Concrete slump requirements shall meet the form liner manufacturer's recommendations for optimizing the concrete finish, as well as the material specifications and special provisions.
With the use of standard Portland cement concrete mixtures, the Contractor shall employ proper consolidation methods to ensure the highest quality finish. Internal vibration shall be achieved with a vibrator of appropriate size, the highest frequency and low to moderate amplitude. Concrete placement shall be in lifts not to exceed 1.5 feet. Internal vibrator operation shall be at appropriate intervals and depths and withdrawn slowly enough to assure a minimal amount of surface air voids and the best possible finish without causing segregation. External form vibrators may be required to assure the proper results. Any use of external form vibrators must be approved by the form liner manufacturer and the Commissioner. The use of internal or external vibratory action shall not be allowed with the use of self consolidating concrete mixtures. It is the intention of this specification that no rubbing of flat areas or other repairs shall be required after form removal. The finished exposed formed concrete surfaces shall be free of visible vertical seams, horizontal seams, and butt joint marks. Grinding and chipping of finished formed surfaces shall be avoided.

METHOD OF MEASUREMENT
The Form Liner Textured Surface will be measured for payment in square feet.

Required adjustments or corrections needed to address mockup comments and the cost of additional mockups, shall be included in the cost of FORM LINER TEXTURED SURFACE.

BASIS OF PAYMENT
Form lined surfaces shall be paid for at the contract unit price per square foot for FORM LINER TEXTURED SURFACE. The unit price bid of the FORM LINER TEXTURED SURFACE shall include all labor and material costs associated with designing, developing, furnishing and installing form liners, forming, pouring, surface coloring and disposal of forms, including a satisfactory cast concrete mockup panel to the requirements included herein.

ITEM NO. 60 CDOT5030010 DRAINAGE SCUPPER, TYPE DS-12

Effective: December 1, 2008

Description. Work under this item shall consist of furnishing and placing drainage scuppers at the locations specified on the plans, and as directed by the Commissioner. Work under this item shall be performed in accordance with the requirements of the most current standard for DRAINAGE SCUPPER, DS-12 of the Illinois Department of Transportation Bureau of Bridges and Structures.

Construction Requirements. The Contractor shall follow the manufacturer's recommended installation procedure in addition to the requirements of the latest standard for DRAINAGE SCUPPER, DS-12 of the Illinois Department of Transportation Bureau of Bridges and Structures.

Material Acceptance. The Contractor must provide a Manufacturer's written certification that the materials comply with these specifications.

Method of Measurement. Drainage scuppers will be measured for payment as each.

Basis of Payment. This work will be paid at the contract unit price per each for DRAINAGE SCUPPER, TYPE DS-12. The contract unit price shall include all materials, fabrication, shop assembly, delivery and installation.

ITEM NO. 61 CDOT5030020 HIGH PERFORMANCE CONCRETE STRUCTURES
ITEM NO. 62 CDOT5030030 HIGH PERFORMANCE CONCRETE SUPERSTRUCTURES

Effective: January 12, 2009
Revised: July 1, 2014

Description. Work under this item shall be performed according to all applicable portions of Section 503 of the IDOT Standard Specifications for Road and Bridge Construction for Class SI and BS Concrete, and as modified herein.

This work shall consist of mix designs, mix design testing, proportioning and mixing, transporting, placing, finishing, curing, and protection of cast-in-place high performance and cast-in-place high strength high performance concrete structures and superstructures.

Materials. Materials shall be provided from IDOT approved sources, except as stated herein.

a) Portland cement**.** Type I, IS, I(SM), or IP, according to Article 1001.01 of the Standard Specification.

b) Fine Aggregate.

   i) Quality. According to Article 1003.02 of the Standard Specifications, except all sands or blends must comply with the minus No. 200 sieve requirements in Article 1003.01(b) of the Standard Specification.

   ii) ASR Rating**.** The IDOT assigned expansion value for dolomite or limestone stone sand shall be used. The expansion value for natural sands shall be as determined by IDOT.

   iii) Gradation. FA/FM02.

c) Coarse Aggregate.

   i) Quality. According to Article 1004.02 of the Standard Specification, except Crushed gravel, crushed concrete, crushed slag or crushed sandstone are not allowed. Coarse Aggregates used in HPC Structure and Superstructure concrete shall contain no more than two percent total by weight (mass) of deleterious materials as specified in Article 1004.01(b) of the Standard Specification.

   ii) Freeze-Thaw Rating. Must be a minimum of an IDOT 30-Year rating.

   iii) ASR Rating**.** The IDOT assigned expansion value for limestone or dolomite coarse aggregates (crushed stone) shall be used.

iv) Gradation**.** Two or more coarse aggregate sizes, consisting of CA/CM 11, CA/CM 13, CA/CM 14, and CA/CM 16 may be combined, provided a CA/CM 11 is included in the blend.

d) Fly ash. Class F according to Section 1010 of the Standard Specification.

e) Microsilica (silica fume)**.** According to Section 1010 of the Standard Specification.

f) Ground Granulated Blast Furnace (GGBF) Slag. According to Section 1010 of the Standard Specification.

g) Admixtures. According to Section 1021 of the Standard Specification.

h) Water**.** According to Section 1002 of the Standard Specification.

Concrete Mix Design.

a) Proportions - HPC mixes shall be designed and produced within the following target proportions.

	HIGH STRENGTH HPC CONCRETE	HPC CONCRETE
Portland Cement	605 lbs. per CY minimum	490 lbs. per CY minimum
Microsilica (silica fume)	25 lbs. per CY required	
One of the Following Required: Ground Granulated Blast Furnace Slag Cement or Fly Ash, Type F	Minimum content shall be 15% of the minimum Portland Cement content. If used for ASR mitigation, use ASR special provision, without cement reduction.	
Water:Cementitious Ratio	0.36 - 0.40	0.38 - 0.44
Air-Entraining Agent	Per IDOT approved list and manufacturer's written instructions	
High Range Water-Reducer	Per IDOT approved list and manufacturer's written instructions	
Retarder	Per IDOT approved list and manufacturer's written instructions	

b) Cement replacement for IDOT Class BS concrete according to Article 1020.05(c)(1)(d) of the Standard Specification shall not apply.

c) Corrosion inhibitors, accelerating admixtures (Types C or E), viscosity modifiers, and hydration stabilizers are not allowed unless approved by the Commissioner.

d) Alkali-Silica Reaction (ASR) Mitigation shall be according to the current Illinois Department of Transportation Supplemental Specification for Portland Cement Concrete. The Contractor shall include a letter of compliance with the mix design submittal indicating which mitigation option has been selected.

e) Physical Properties. The mix design shall meet the specifications listed in Table 1-A. The Commissioner reserves the right to conduct additional tests as required to determine the acceptability of durability and material properties of the HPC mixture.

Table 1-A
Physical Properties

Property	HIGH STRENGTH HPC CONCRETE	HPC CONCRETE	**Test Methods**
Total air content, plastic concrete	7 +/- 1.5%[2/]		AASHTO T152 [1/]
Slump, maximum after HRWR addition	8 in.		AASHTO T119 [1/]
Slump, minimum after 45 minutes	4 in.		AASHTO T119 [1/]
Initial set time, minimum	3 hours		AASHTO T197
28-day compressive strength, minimum	6,000 psi	4,000 psi	AASHTO T22 [1/]
28-day compressive strength, maximum	9,500 psi	9,500 psi	AASHTO T22 [1/]
Total air content, hardened concrete	7+/- 1.5%		ASTM C457
Maximum air void spacing factor	0.010 in		ASTM C457
Minimum air void specific surface	500 in^2/in^3		ASTM C457
Chloride Permeability Resistance	<2000 coulombs at 28 days		AASHTO T277
Petrographic examination	Report		ASTM C856

Footnotes:
[1/] Per IDOT Manual of Test Procedures
[2/] Or as required to meet the total air content in the hardened concrete.

Mix Design, Trial Mixes and Verification Testing.

a) Mix designs shall be submitted to the Commissioner for approval at least 45 days prior to the start of production. Mix designs shall be performed according to the IDOT PCC Mix Design Program.

b) The Trial Mix shall be produced with the mix equipment proposed for production. The Trial Mix evaluation shall include testing for the properties in Table 1-A.

i) Testing shall be conducted by laboratories approved by the Commissioner, and at no cost to the City.

ii) Initial Set Time (AASHTO T 197), Air Voids analysis (ASTM C457), Chloride Permeability Resistance (AASHTO T277), and Petrographic Analysis (ASTM C856) shall be performed by AASHTO accredited laboratories. Advance notice of testing shall be provided to the Commissioner, who may witness the trial mix and testing.

c) Documentation:

i) Ingredient Materials. Include relevant pages of IDOT's:
(1) Approved aggregate source list.
(2) Freeze-thaw rating list.
(3) Approved list of qualified cement plants.
(4) Approved list of concrete admixtures.
(5) Approved list of suppliers for finely divided minerals.
(6) Alkali-Silica Potential Reactivity Rating List.

ii) Trial Mix test results verifying conformance with the requirements of Table 1-A.

d) Mix Changes. Once the mix design is approved, no ingredient sources may be changed without the written approval of the Commissioner. The Commissioner may require or conduct additional tests to verify the affect of ingredient material changes.

e) Approved HPC mix designs shall be valid for two years from date of approval.

Equipment. Equipment shall meet the requirements of Article 503.03 of the Standard Specifications unless superseded by this specification.

Construction Requirements.

Placing and Consolidating. Work shall be performed according to Article 503.07 of the Standard Specification and as modified herein:

a) All weather parameters shall be measured, recorded and provided. In addition, all weather monitoring equipment to support any request to deviate from the temperature requirements of this specification shall be provided.

i) Temperature. The air and concrete temperature at placement shall be in accordance with Article 1020.14(b) of the Standard Specifications and as modified herein.

ii) HPC shall not be cast when air temperatures exceed 90°F.

iii) HPC deck shall be cast at night whenever air temperatures exceed 80°F, unless it has

been demonstrated the evaporation rate will be less than 0.10 lbs./sf/hr and approval has been granted by the Commissioner.

b) Wind. Whenever wind speeds exceed 10 mph (light breeze), fogging of the exposed concrete surface shall be continuous.

c) Evaporation. Evaporation rates shall be determined utilizing the ACI 305 nomograph and shall be based on actual temperature and wind speed data obtained from the field the day prior to the pour. The resulting evaporation rates will determine the time of day for the subsequent placement if climatic conditions are anticipated to be similar in nature. If the conditions prior to the pour are deemed by the Commissioner not to be similar in nature, the time of day for the placement will need to be reevaluated using current field data. Unless waived by the Commissioner, evaporation rates shall also be monitored during every placement to determine the level of fogging necessary to reduce the potential for shrinkage cracking.

   i) When the evaporation rate exceeds 0.15 lbs/sf/hr, HPC concrete shall not be cast.

   ii) When the evaporation rate exceeds 0.10 lbs/sf/hr, casting HPC at night shall be performed.

   Methods necessary to lower concrete temperatures including night time placements, cooling the mix water, adding ice, shading, or sprinkling the coarse aggregates with chilled water shall be implemented when concrete temperatures cannot be maintained below the maximum acceptable limit given the application. Extra attention to fogging may be required, as well as applying curing as soon as possible after finishing.

d) No additional or supplemental compensation shall be made for any measures required for the satisfactory placement of HPC concrete as described herein or as directed by the Commissioner, including but not limited to weather data collection, equipment, admixtures, premium costs, lighting, or other appurtenant and collateral work required. The cost shall be included in the unit price for the placement of HPC, as shown on the Contract Plans and indicated in the Contract Specifications.

Method of Measurement. Measurement shall be performed according to Article 503.21 of the Standard Specification.

Basis of Payment. This work will be paid for at the contract unit price per cubic yard for HIGH PERFORMANCE CONCRETE STRUCTURES and HIGH PERFORMANCE CONCRETE SUPERSTRUCTURES..

Concrete protected according to Article 1020.13(d) of the Standard Specification may be paid for at the adjusted unit prices which will be a percentage according to the table from Article 503.22 of

the Standard Specification of the contract unit price for the classes of concrete involved. These adjustments will be made only when they are authorized in writing by the Engineer. No adjustment will be made in the contract unit prices for any concrete if winter work is necessary to meet the required completion dates specified in the contract.

ITEM NO. 63 CDOT5030070 LATEX CONCRETE OVERLAY FOR NEW BRIDGE DECK, 2-1/4 INCH

Effective: October 1, 2011

This work shall consist of the preparation of a new concrete bridge deck and the construction of a latex overlay to the specified thickness.

Materials. Materials shall meet the following Articles of Section 1000:

Item	Section/Article
Latex/Portland Cement Concrete (Note 1) (Note 2)	1020
Packaged Rapid Hardening Mortar or Concrete	1018
Concrete Curing Materials	Art. 1022.02

Note 1. The latex admixture shall be a uniform, homogeneous, non-toxic, film-forming, polymeric emulsion in water to which all stabilizers have been added at the point of manufacture. The latex admixture shall not contain any chlorides and shall contain 46 to 49 percent solids.

The Contractor shall submit a manufacturer's certification that the latex emulsion meets the requirements of FHWA Research Report RD-78-35, Chapter VI. The certificate shall include the date of manufacture of the latex admixture, batch or lot number, quantity represented, manufacturer's name, and the location of the manufacturing plant. The latex emulsion shall be sampled and tested in accordance with RD-78-35, Chapter VII, Certification Program.

The latex admixture shall be packaged and stored in containers and storage facilities which will protect the material from freezing and from temperatures above 85°F (30°C). Additionally, the material shall not be stored in direct sunlight and shall be shaded when stored outside of buildings during moderate temperatures.

Note 2. Cement shall be Type I portland cement. Fine aggregate shall be natural sand and the coarse aggregate shall be crushed stone or crushed gravel. The gradation of the coarse aggregate shall be CA 13, CA 14 or CA 16.

Mixture Design. The latex concrete shall contain the following approximate units of measure or volumes per cubic yard (cubic meter).

Type I Portland Cement	658 lb. (390 kg)
Latex Admixture	24.5 gal (121.3 L)
Coarse Aggregate	42 to 50 percent by weight (mass) of total aggregate
Water (including free moisture on the fine and coarse aggregates)	157 lb. (93.1 kg) maximum

No air entraining admixtures shall be added to the mix.

This mix design is based on a specific gravity of 2.65 for both the fine and the coarse aggregates. The mix will be adjusted by the Engineer to compensate for aggregate specific gravity and moisture.

The latex concrete shall meet the following requirements:

Slump shall be according to Article 1020.07 and 1020.12:	3 to 6 in. (75 to 150 mm)
Air Content shall be according to Article 1020.08 and 1020.12:	7 percent maximum
Water-cement ratio (considering all the nonsolids in the latex admixture as part of the total water)	0.30 to 0.40
Required Strength (Compressive)	4000 psi (27,500 kPa) minimum
Required Strength (Flexural)	675 psi (4,650 kPa) minimum

Equipment. The equipment used shall be subject to the approval of the Engineer and shall meet the following requirements:

(a) Surface Preparation Equipment. Surface preparation equipment shall be according to the applicable portions of Section 1100 and the following:

1. Sawing Equipment. Sawing equipment shall be a concrete saw capable of sawing concrete to the specified depth.
2. Mechanical Blast Cleaning Equipment. Mechanical blast cleaning shall be performed by high-pressure water blasting. Mechanical high-pressure water blasting equipment shall be mounted on a wheeled carriage and shall include multiple nozzles mounted on a rotating assembly, and shall be operated with a 7000 psi (48 MPa) minimum water pressure. The distance between the nozzles and the deck surface shall be kept constant and the wheels shall maintain contact with the deck surface during operation.
3. Hand-Held Blast Cleaning Equipment. Blast cleaning using hand-held equipment shall be performed by high-pressure water blasting. Hand-held high-pressure water blasting equipment that is used in areas inaccessible to mechanical blast cleaning equipment shall have a minimum water pressure of 7000 psi (48 MPa).
4. Vacuum Cleanup Equipment. The equipment shall be equipped with fugitive dust control devices capable of removing wet debris and water all in the same pass. Vacuum equipment shall also be capable of washing the deck with pressurized water prior to the vacuum operation to dislodge all debris and slurry from the deck surface.

(b) Pull-off Test Equipment. Equipment used to perform pull-off testing shall be either approved by the Engineer, or obtained from one of the following approved sources:

James Equipment	Germann Instruments, Inc.
007 Bond Tester	BOND-TEST Pull-off System
800-426-6500	847-329-9999
SDS Company	
DYNA Pull-off Tester	
805-238-3229	

Pull-off test equipment shall include all miscellaneous equipment and materials to perform the test and clean the equipment, as indicated in the Illinois Test procedure 304 and 305 "Pull-off Test (Surface or Overlay Method)". Prior to the start of testing, the Contractor shall submit to the Engineer a technical data sheet and material safety data sheet for the epoxy used to perform the testing. For solvents used to clean the equipment, a material safety data sheet shall be submitted.

(c) Concrete Equipment. A mobile portland cement concrete plant shall be used for Latex Concrete and shall be according to Articles 1020.12, 1103.04 and the following:

1. The device for proportioning water shall be accurate within one percent.
2. The mixer shall be a self-contained, mobile, continuous mixer used in conjunction with volumetric proportioning.
3. The mixer shall be calibrated prior to every placement of material or as directed by the Engineer.

(d) Finishing Equipment. Finishing equipment shall be according to Article 503.03.

(e) Mechanical Fogging Equipment. Mechanical fogging equipment shall be according to 503.03.

Construction Requirements. Sidewalks, curbs, drains, reinforcement and/or existing transverse and longitudinal joints which are to remain in place shall be protected from damage during cleaning operations. All damage caused by the Contractor shall be corrected, at the Contractor's expense, to the satisfaction of the Engineer.

The Contractor shall control the runoff water generated by the various construction activities in such a manner as to minimize, to the maximum extent practicable, the discharge of untreated effluent into adjacent waters, and shall properly dispose of the solids generated according to Article 202.03. The Contractor shall submit a water management plan to the Engineer specifying the control measures to be used. The control measures shall be in place prior to the start of runoff water generating activities. Runoff water shall not be allowed to constitute a hazard to adjacent or underlying roadways, waterways, drainage areas or railroads nor be allowed to erode existing slopes.

(a) Deck Preparation.

1. Bridge Deck Blast Cleaning. The blast cleaning operation shall consist of preparing the designated concrete deck surface using water blasting equipment as specified under Surface Preparation Equipment. The areas designated shall be blast cleaned to the depth specified on the plans. If a blast cleaning depth is not specified, a minimum of one eight of an inch shall be required.

   After water blasting, the deck shall be thoroughly vacuum cleaned in a timely manner before the water and debris are allowed to dry and re-solidify to the deck.

2. Final Surface Preparation. Any areas determined by the Engineer to be inaccessible to water blasting equipment shall be thoroughly water blasted with hand-held equipment.

   If spoils from the blast cleaning operation are allowed to dry and re-solidify on the deck surface, the deck surface shall be cleaned again with blasting cleaning equipment and immediately vacuumed.

   Final surface preparation shall also include the cleaning of all dust, debris, concrete fines and other foreign substances from the deck surface including vertical faces of curbs, previously placed adjacent overlays, barrier walls up to a height of 1 in. (25 mm) above the overlay, and depressions. Hand-held high-pressure water blasting equipment shall be used for this operation.

   Surface pull-off testing shall be conducted at a frequency of one location per 2500 square feet. Testing shall be in according to the Illinois Test Procedure 304 "Pull-off Test (Surface Method)". The Contractor shall provide the test equipment. The Engineer shall determine each test location, and each individual test shall have a minimum strength of 175 psi (1,207 kPa). In the case of a failing test, the Contractor shall adjust the blast cleaning method and re-clean the area. Testing will be repeated until satisfactory results are attained.

   All dust, concrete fines, debris, including water, resulting from the surface preparation shall be confined and shall be immediately and thoroughly removed from all areas of accumulation. If concrete placement does not follow immediately after the final blast cleaning, the area shall be carefully protected with well-anchored white polyethylene sheeting.

(b) Pre-placement Procedure. Prior to placing the overlay, the Engineer will inspect the deck surface. All contaminated areas shall be blast cleaned again at the Contractor's expense. Before placing the overlay, the finishing machine shall be operated over the full length of bridge segment to be placed to check support rails for deflection and confirm the minimum overlay thickness. All necessary adjustments shall be made and another check performed, unless otherwise directed by the Engineer.

(c) Testing. All testing shall be according to Check Sheet 31 of the Illinois Department of Transportation Supplemental Specifications and Recurring Special Provisions, except the frequency for slump testing by QC shall be revised to a minimum of one test per truck.

(d) Placement Procedure. Concrete placement shall be according to Article 503.07 and the following:

1. Bonding Method.

   The deck shall be cleaned to the satisfaction of the Engineer and shall be thoroughly wetted and maintained in a dampened condition with water for at least 12 hours before placement of the overlay. Any excess water shall be removed by compressed air or by vacuuming prior to the beginning of overlay placement. Water shall not be applied to the deck surface within one hour before or at any time during placement of the overlay.

2. Overlay Placement.

   Placement of the concrete shall be according to Article 503.16.

   Internal vibration will be required along edges, adjacent to bulkheads, and where the overlay thickness exceeds 3 in. (75 mm). Internal vibration along the longitudinal edges of a pour will be required with a minimum of 2 hand-held vibrators, one on each edge of the pour. Hand finishing will be required along the edges of the pour and shall be done from sidewalks, curbs or work bridges.

   A construction dam or bulkhead shall be installed in case of a delay of 30 minutes or more in the concrete placement operation.

   All construction joints shall be formed. When required by the Engineer the previously placed overlay shall be sawed full-depth to a straight and vertical edge before fresh concrete is placed. The Engineer will determine the extent of the removal. When longitudinal joints are not shown on the plans, the locations shall be subject to approval by the Engineer and shall not be located in the wheel paths.

   The Contractor shall stencil the date of construction (month and year) and the letters LX into the overlay before it takes its final set unless directed otherwise by the Commissioner. The stencil shall be located in a conspicuous location, as determined by the Engineer, for each stage of construction. This location shall be outside of the grooving where possible and within 3 ft. (1 m) of an abutment joint. The characters shall be 3 to 4 in. (75 mm to 100 mm) in height, 1/4 in. (5 mm) in depth and face the centerline of the roadway.

3. Limitations of Operations.

   (a) Weather Limitations. Temperature control for concrete placement shall be according to 1020.14(b). The concrete protection from low air temperatures during the curing period shall be according to Article 1020.13(d). Concrete shall not be placed when rain is expected during the working period. If night

placement is required, illumination and placement procedures will be subject to the approval of the Engineer. No additional compensation will be allowed if night work is required.

(b) Other Limitations. Concrete delivery vehicles driven on the structure shall not exceed the legal load limit of the structure.

Final blast cleaning and concrete placement on adjacent portions of the deck may proceed, provided the process does not interfere in any way with any other blast cleaning or placement operations.

Water or contaminants from blast cleaning operations shall not be permitted in areas where the new overlay has been placed until the overlay has cured a minimum of 24 hours.

No concrete shall be removed within 6 ft. (1.8 m) of a newly-placed overlay until the concrete has obtained a minimum compressive strength of 3000 psi (20,700 kPa) or flexural strength of 600 psi (4,150 kPa).

4. Curing.

The minimum curing time shall be 48 hours of wet cure followed by 48 hours of dry cure. The wet cure shall be according to Article 1020.13(a)(5), except Cotton Mats shall be replaced with two layers of burlap that have been pre-dampened for a minimum of 12 hours. Excess water shall not be allowed to drip from the burlap onto the overlay during placement. After the wet cure is completed all layers of covering materials shall be removed to allow for the dry cure.

If the ambient temperature falls below 50°F (10°C) during either the wet or dry curing periods, the time below 50°F (10°C) will not be included in the 96 hour curing period. If there is sufficient rain to wet the surface of the overlay for more than one hour of the dry cure period, the wet time will not be included in the 48 hour dry cure period.

5. Opening to Traffic.

No traffic or construction equipment will be permitted on the overlay until after the specified cure period and the concrete has obtained a minimum compressive strength of 4000 psi (27,500 kPa) or flexural strength of 675 psi (4,650 kPa).

At the Engineers discretion, no traffic or construction equipment will be permitted within 12 feet of any overlay until the overlay has obtained initial set, or the concrete has obtained a minimum compressive strength of 4000 psi (27,500 kPa) or flexural strength of 675 psi (4,650 kPa).

6. Overlay Testing.

   The Engineer reserves the right to conduct pull-off tests on the overlay to determine if any areas are not bonded to the underlying concrete. The overlay will be tested according to the Illinois Test procedure 305 "Pull-off Test (Overlay Method)", and the Contractor shall provide the test equipment. Each individual test shall have a minimum strength of 150 psi (1,034 kPa). Unacceptable test results will require removal and replacement of the overlay at the Contractor's expense, and the locations will be determined by the Engineer. When removing portions of an overlay, the saw cut shall be a minimum depth of 1 in. (25 mm).

   If the overlay is to remain in place, all core holes due to testing shall be filled with a rapid set mortar or concrete. Only enough water to permit placement and consolidation by rodding shall be used, and the material shall be struck-off flush with the adjacent material.

   For a rapid set mortar mixture, one part packaged rapid set cement shall be combined with two parts fine aggregate, by volume; or a packaged rapid set mortar shall be used. For a rapid set concrete mixture, a packaged rapid set mortar shall be combined with coarse aggregate according to the manufacturer's instructions; or a packaged rapid set concrete shall be used. Mixing of a rapid set mortar or concrete shall be according to the manufacturer's instructions.

Method of Measurement. The latex concrete overlay will be measured for payment in square yards (square meters).

Basis of Payment. Latex concrete overlay will be paid for at the contract unit price per square yard (square meter) for LATEX CONCRETE OVERLAY FOR NEW BRIDGE DECK, of the thickness specified.

ITEM NO. 65 CDOT5050010 FURNISHING AND ERECTING STRUCTURAL STEEL

Effective: August 1, 2008

Description. Work under this item shall be performed with Section 505 of the IDOT Standard Specifications for Road and Bridge Construction, except as herein modified.

Submittals. Erection drawings and calculations shall be submitted to the Commissioner for review and approval, at least 14 days prior to the beginning of the erection work. The submittal shall include detailed plans and calculations, which include full details, dimensions, equipment sizes, equipment capacities, equipment locations, rigging information with capacities, traffic staging, and calculations, showing that the existing structure will be stable during all phases of erection, whether or not equipment is located on the superstructure. The erection plans and calculations shall be sealed by an Illinois licensed Structural Engineer. The erection shall not commence without the Commissioner's approval.

Method of Measurement: The furnishing and erecting of structural steel shall be measured for payment in accordance with Article 505.12 of the IDOT Standard Specifications for Road and Bridge Construction.

Basis of Payment: Structural steel furnished and erected in place will be paid for at the lump sum price for FURNISHING AND ERECTING STRUCTURAL STEEL.

ITEM NO. 83 56103300 DUCTILE IRON WATER MAIN 12"

Description: This work shall consist of constructing water main of the required material and inside diameter. This work shall be performed according to the details shown in the plans, the Department of Water Management Special Provisions included elsewhere in these Specifications, Section 561 of the Standard Specifications, and as directed by the Commissioner. The Contractor is advised that the work will be performed on a potable water system owned and operated by the Chicago Department of Water Management (DWM), and all work will require the review and approval of the DWM prior to starting the work.

The Contractor shall flush, perform hydrostatic pressure testing, and chlorinate according to the Department of Water Management Special Provisions included elsewhere in these Specifications, and as directed by the Commissioner. The Department of Water Management will perform the connection to water main source.

All required work to connect to the existing water main is included under this item unless noted otherwise on the plans.

The Contractor shall notify the Department of Water Management 2 weeks in advance of performing the work. In addition, the Contractor shall notify the Department of Water Management 40 hours prior to connection to water main supply and abandoning existing water main. See plan water main drawings for additional requirements.

The Contractor shall submit manufacturer's cut sheets and shop drawings for all materials to be used for review and approval. All materials must be approved by the Commissioner prior to ordering materials.

The hangar system shown on the plans is suggested and the Contractor shall submit design calculations for the proposed system, sealed by an Illinois Licensed Structural Engineer. Prior to starting the design and ordering of materials, the Contractor shall submit proposed material and manufacturers cut sheets for review and approval by the Commissioner and Department of Water Management.

The insulation for the watermain which is attached to the structure shall consists of two layers. The inner layer shall be a flexible elastomeric thermal insulation with a 12 mil laminated covering, and shall conform to ASTM C 534 Type II-sheet grade 1 and ASTM D 1056, 2B1. The outer layer of pipe insulation shall be a flexible closed cell elastomeric thermal insulation and shall conform to ASTM C 534 Type II-sheet grade 1, ASTM D 1056 2B1 and ASTM E 84. The Contractor shall submit Manufacturer's cut sheets for review and approval by the Commissioner prior to ordering materials. Insulation shall be wrapped as shown on the plans.

Insulation for buried water main, where necessary, shall be according to Department of Water Management Special Provision 33 07 00 located elsewhere in these Specifications.

A water tight seal with water stop shall be provided for the portion of the pipe which extends through the abutment backwall. Material and details shall be submitted to the Commissioner

for review and approval.

Restraint Joint system shall be provided as indicated on the plans. Pipe material and joints shall be according to DWM Special Provisions "Ductile Iron Pipe and Fittings – Section 33 11 13 located elsewhere in these Specifications.

Method of Measurement: Ductile Iron Water Main 12" diameter will be measured in place, for payment in feet.

Basis of Payment: The work will be paid for at the contract unit price per foot for DUCTILE IRON WATER MAIN 12", which price shall include all pipe fittings, reducers, bridge deck hangars and support system, insulation, pipe installation, thrust blocks, thrust restraint joints, pipe cuts, existing water main removal, trenching and backfill, pavement saw cuts and removal, and all other labor and materials required to complete the work.

Fire hydrants and fire hydrant removal will be measured and paid for separately.

ITEM NO. 84 56400500 FIRE HYDRANTS TO BE REMOVED

Description: This work shall consist of the removal of existing City of Chicago Fire Hydrants. The hydrants shall be removed using methods that minimize damage to the hydrant, pipe, valves, fittings and other elements, salvaged and delivered to the district yard as directed by the Commissioner. The Contractor shall use reasonable care in removing materials designated for salvage encountered in the work. The Contractor must obtain a signed and dated receipt for all materials that are delivered to the designated storage point. If the hydrant is rejected by the DWM due to condition, the hydrant must be disposed of off- site in an approved manner at the Contractor's expense.

The Contractor is advised that the work will be performed on a potable water system owned and operated by the Chicago Department of Water Management (DWM), and all work will require the review and approval of the DWM prior to starting the work.

The water main shutdown required to perform the work will only be allowed based upon coordination and scheduling with the Department of Water Management.

Method of Measurement: This work will be paid for per each FIRE HYDRANTS TO BE REMOVED.

Basis of Payment: The work will be paid for at the contract unit price per each for FIRE HYDRANTS TO BE REMOVED which shall include all labor, tools and materials necessary to complete the work as described.

ITEM NO. 85 56400600 FIRE HYDRANTS

Description: This work shall consist of the installation of new fire hydrants at locations specified and as approved by the City of Chicago Department of Water Management (DWM). This work shall be performed according to Department of Water Management requirements, Section 564 of the Standard Specifications, and as directed by the Commissioner.

The Contractor is advised that the work will be performed on a potable water system owned and operated by the Chicago Department of Water Management (DWM), and all work will require the review and approval of the DWM prior to starting the work.

The water main shutdown required to perform the work will only be allowed based upon coordination and scheduling with the Department of Water Management.

Furnishing and installation of ductile iron hydrants, fittings, and other appurtenances for the installation of fire hydrants shall conform to the following Department of Water Management Special Provisions included elsewhere in these Specifications,

Ductile Iron Pipes and Fittings	Section 33 11 13
Fire Hydrants	Section 33 12 19
Hydrostatic Testing and Disinfecting Water Mains	Section 33 13 00

Method of Measurement: This work will be paid for per each FIRE HYDRANTS installed and accepted by the Commissioner.

Basis of Payment: The work will be paid for at the contract unit price per each for FIRE HYDRANTS which shall include all labor, tools and materials necessary to complete the work as described, and includes all necessary thrust restraints.

ITEM NO. 87 CDOT5870010 PROTECTIVE CONCRETE SEALER

Effective: July 1, 2010

Description. Work under this item shall be performed according to the applicable portions of Sections 420, 421, 483, 503 and 587 of the IDOT Standard Specifications for Road and Bridge Construction, except as herein modified.

This work shall consist of providing and applying the protecting concrete sealer as directed by the Commissioner.

Materials. The use of linseed oil shall not be permitted. Material shall be in accordance with Section 1026 of the IDOT Standard Specifications for Road and Bridge Construction. The material shall not affect the appearance of the concrete.

General Requirements. Proposed material shall be submitted for approval by the Commissioner. No material application work shall be allowed without the approval of the Commissioner.

Construction Requirements. The material shall be applied according to the Manufacturer's specifications.

Basis of Payment. This work will be paid for at the contract unit price per square yard for PROTECTIVE CONCRETE SEALER.

ITEM NO. 94 60250200 CATCH BASINS TO BE ADJUSTED

ITEM NO. 95 60255500 MANHOLES TO BE ADJUSTED

ITEM NO. 96 60265700 VALVE VAULTS TO BE ADJUSTED

Description: This work shall be performed according to Section 602 of the Standard Specifications, except as herein modified. This work shall consist of the adjustment of existing catch basins, manholes, valve vaults, water meter vaults or other structures. This work shall include the first two feet of masonry required to be added, removed or rebuilt to bring the specified casting to the finished grade of the proposed improvement.

Materials: The Cement Factor shall be a minimum of 7.35 cwt. The mix shall be designed according to Section 3.0 of the IDOT QC/QA PCC Level III Technician Manual. High early strength concrete must achieve a minimum compressive strength of 3,500 psi within 3 days of placement.

The use of HMA for pavement patching is not allowed.
The use of HDPE plastic adjusting rings (602.02(l)) is not allowed.
The use of Recycled Rubber Adjusting rings (602.02(m)) is not allowed.

General Requirements: Under no circumstance will an adjustment not be completed in the same day as it is started. Under no circumstance will any debris be left in the street overnight.

The Contractor must stage adjustment work so that the traffic flows in a safe manner. Prior to starting construction, an inspection of all the existing structures, shall be made by the Commissioner and the Contractor to determine the amount of existing debris in these structures.

Method of Measurement: This work will be measured per each item adjusted.

Basis of Payment: This work will be paid for at the contract unit price per each for CATCH BASINS TO BE ADJUSTED, MANHOLES TO BE ADJUSTED or VALVE VAULTS TO BE ADJUSTED.

ITEM NO. 99 CDOT6060020 COMBINATION CONCRETE CURB AND GUTTER, TYPE B-V.12

Effective: December 1, 2008

Description. Work under this item shall be performed according to Section 606 of the IDOT Standard Specifications for Road and Bridge Construction, and to the City of Chicago Department of Transportation detail for P.C.C. Curb & Gutter included in the plan documents.

Materials: Materials shall be according to article 606.02 of the IDOT Standard Specifications for Road and Bridge Construction

Method of Measurement: Combination curb and gutter shall be measured for payment according to article 606.14 of the IDOT Standard Specifications for Road and Bridge Construction

Basis for Payment: Combination concrete curb and gutter will be paid for at the contract unit price per foot for COMBINATION CONCRETE CURB AND GUTTER, TYPE B-V.12.

ITEM NO. 100 CDOT6640010 TEMPORARY CHAIN LINK FENCE WITH SCREENING, 6'

Effective: October 1, 2008
Revised: July 1, 2009

Description. Work under this item shall consist of constructing, installing, maintaining and removing a chain link fence and gates with screening, of the height specified on the plans, or as directed by the Commissioner. Work under this item shall be performed according to Section 664 of the IDOT Standard Specifications for Road and Bridge Construction, except as herein modified.

General Requirements. The chain link fence shall be anchored sufficient to resist wind loads of 30 pounds per square foot without deflection of more than three inches between top and bottom fence. The base shall not interfere with pedestrian and/or vehicular traffic, and shall be approved by the Commissioner.

Opaque Fabric Meshing shall be affixed to the chain link fence face. The fabric meshing shall allow passage of air but shall contain dust and dirt. The mesh fabric shall be the full height of the fence and cover the entire length of the fence including any gated opening. The fabric meshing and fence shall not contain any advertisement. The color of the fabric shall be approved by the Commissioner.

Method of Measurement. Chain link fence will be measured for payment in feet, along the top of fence from center to center of end posts, including the length occupied by gates.

Basis of Payment. This work will be paid at the contract unit price per foot for TEMPORARY CHAIN LINK FENCE WITH SCREENING, of the height specified.

ITEM NO. 101 CDOT66400030 RELOCATE TEMPORARY CHAIN LINK FENCE WITH SCREENING

Effective: July 1, 2009

Description. Work under this item shall consist of shifting or relocating a temporary chain link fence and gate with screening, as specified on the plans, or as directed by the Commissioner. Work under this item shall be performed according to Section 664 of the IDOT Standard Specifications for Road and Bridge Construction, except as herein modified.

Method of Measurement. Temporary chain link fence to be shifted or relocated will be measured for payment in feet, along the top of fence from center to center of end posts, including the length occupied by gates.

Basis of Payment. This work will be paid at the contract unit price per foot for RELOCATE TEMPORARY CHAIN LINK FENCE WITH SCREENING.

ITEM NO. 102 CDOT6700010 ENGINEER'S FIELD OFFICE

Effective: August 1, 2008
Revised: July 8, 2009

Description. Work under this item shall consist of supplying engineer's field offices. Work under this item shall be performed according to Section 670 of the IDOT Standard Specifications for Road and Bridge Construction, except as herein modified.

General Requirements. Field offices must comply with the requirements for Engineer's Field Office, except as herein modified.

Field offices shall have a ceiling height of not less than seven (7) ft. and a floor space of not less than 800 sq. ft.

Adequate all weather parking space shall be available to accommodate a minimum of 10 vehicles.

Solid waste disposal consisting of two waste basket(s) and an outside trash container of sufficient size to accommodate a weekly pick-up service shall be provided by the Contractor.

In addition, the following equipment and furniture meeting the approval of the Commissioner shall be furnished:

(a) Five desk(s) with minimum working surface 42"x30" each and five non-folding office chairs with upholstered seats and backs and with wheels.
(b) One four-drawer legal size file cabinets.
(c) Eight folding chairs and one 36"x96" folding tables.
(d) One office style frostless refrigerator with a minimum size of eight cubic feet with a separate freezer unit.
(e) One microwave oven with a minimum capacity of one cubic feet.
(f) One electric desk type tape printing calculators.
(g) One telephone(s) with multiline capability touch tone and voice mail (for exclusive use by the Commissioner). One phone line(s), one for voice, one for fax *and one for security*. One high speed broadband internet connection with unlimited access and wireless networking capabilities for multiple users (for exclusive use of the Commissioner).
(h) One desktop color laser multifunction fax-printer-scanner-copier with network connectivity, including maintenance, paper supply and toner. The machine shall have a minimum of 600 dpi resolution, and shall be capable of reproducing, sorting and stapling prints up to size 11"x17".
(i) The computer equipment shall fulfill the following minimum requirements, in conformance with the latest technology in use in the City of Chicago:

_____

(j) One case of approximately twelve cans of aerosol marking paint, of the color chosen by the commissioner.
(k) Accessible potable water and coffee service.

Basis of Payment. The building or buildings fully equipped, will be paid for at the contract unit price per calendar month or fraction thereof for ENGINEER'S FIELD OFFICE, according to article 670.07 of the IDOT Standard Specifications for Road and Bridge Construction.

REMOVAL AND DISPOSAL OF REGULATED SUBSTANCES

ITEM NO. 104 66900200 NON SPECIAL WASTE DISPOSAL

ITEM NO. 105 66900205 SPECIAL WASTE DISPOSAL

ITEM NO. 106 66900450 SPECIAL WASTE PLANS AND REPORTS

ITEM NO. 107 66900530 SOIL DISPOSAL ANALYSIS

ITEM NO. 108 66900655 TCL SOIL ANALYSIS

Revise Article 669.01 of the Standard Specifications to read:

"669.01 Description. This work shall consist of the transportation and proper disposal of contaminated soil and water. This work shall also consist of the removal, transportation, and proper disposal of underground storage tanks (UST), their content and associated underground piping to the point where the piping is above the ground, including determining the content types and estimated quantities."

Revise Article 669.08 of the Standard Specifications to read:

"669.08 Contaminated Soil and/or Groundwater Monitoring. The Contractor shall hire a qualified environmental firm to monitor the area containing the regulated substances. The affected area shall be monitored with a photoionization detector (PID) utilizing a lamp of 10.6eV or greater or a flame ionization detector (FID). Any field screen reading on the PID or FID in excess of background levels indicates the potential presence of contaminated material requiring handling as a non-special waste, special waste, or hazardous waste. No excavated soils can be taken to a clean construction and demolition debris (CCDD) facility or an uncontaminated soil fill operation with detectable PID or FID meter readings that are above background. The PID or FID meter shall be calibrated on-site and background level readings taken and recorded daily. All testing shall be done by a qualified engineer/technician. Such testing and monitoring shall be included in the work. The Contractor shall identify the exact limits of removal of non- special waste, special waste, or hazardous waste. All limits shall be approved by the Engineer prior to excavation. The Contractor shall take all necessary precautions.

Based upon the land use history of the subject property and/or PID or FID readings indicating contamination, a soil or groundwater sample shall be taken from the same location and submitted to an approved laboratory. Soil or groundwater samples shall be analyzed for the contaminants of concern, including pH, based on the property's land use history or the parameters listed in the maximum allowable concentration (MAC) for chemical constituents in uncontaminated soil established pursuant to Subpart F of 35 Illinois Administrative Code 1100.605. The analytical results shall serve to document the level of soil contamination. Soil and groundwater samples may be required at the discretion of the Engineer to verify the level of soil and groundwater contamination.

Samples shall be grab samples (not combined with other locations). The samples shall be taken with decontaminated or disposable instruments. The samples shall be placed in sealed containers and transported in an insulated container to the laboratory. The container shall maintain a temperature of 39 °F (4 °C). All samples shall be clearly labeled. The labels

shall indicate the sample number, date sampled, location and elevation, and any other observations.

The laboratory shall use analytical methods which are able to meet the lowest appropriate practical quantitation limits (PQL) or estimated quantitation limit (EQL) specified in "Test Methods for Evaluating Solid Wastes, Physical/Chemical Methods", EPA Publication No. SW-846 and "Methods for the Determination of Organic Compounds in Drinking Water", EPA, EMSL, EPA-600/4-88/039. For parameters where the specified cleanup objective is below the acceptable detection limit (ADL), the ADL shall serve as the cleanup objective. For other parameters the ADL shall be equal to or below the specified cleanup objective."

Replace the first two paragraphs of Article 669.09 of the Standard Specifications with the following:

"**669.09 Contaminated Soil and/or Groundwater Management and Disposal.** The management and disposal of contaminated soil and/or groundwater shall be according to the following:

(a) Soil Analytical Results Exceed Most Stringent MAC. When the soil analytical results indicate that detected levels exceed the most stringent maximum allowable concentration (MAC) for chemical constituents in uncontaminated soil established pursuant to Subpart F of 35 Illinois Administrative Code 1100.605, the soil shall be managed as follows:

(1) When analytical results indicate chemical constituents exceed the most stringent MAC but they are still considered within area background levels by the Engineer, the excavated soil can be utilized within the construction limits as fill, when suitable. Such soil excavated for storm sewers can be placed back into the excavated trench as backfill, when suitable, unless trench backfill is specified. If the soils cannot be utilized within the construction limits, they shall be managed and disposed of off-site as a non-special waste, special waste, or hazardous waste as applicable.

(2) When analytical results indicate chemical constituents exceed the most stringent MAC but do not exceed the MAC for a Metropolitan Statistical Area (MSA) County, the excavated soil can be utilized within the construction limits as fill, when suitable, or managed and disposed of off-site as "uncontaminated soil" at a CCDD facility or an uncontaminated soil fill operation within an MSA County provided the pH of the soil is within the range of 6.25 - 9.0, inclusive.

(3) When analytical results indicate chemical constituents exceed the most stringent MAC but do not exceed the MAC for an MSA County excluding Chicago, or the MAC within the Chicago corporate limits, the excavated soil can be utilized within the construction limits as fill, when suitable, or managed and disposed of off-site as "uncontaminated soil" at a CCDD facility or an uncontaminated soil fill operation within an MSA County excluding Chicago or within the Chicago corporate limits provided the pH of the soil is within the range of 6.25 - 9.0, inclusive.

(4) When analytical results indicate chemical constituents exceed the most stringent MAC but do not exceed the MAC for an MSA County excluding Chicago, the excavated soil can be utilized within the construction limits as fill, when suitable, or managed and disposed of off-site as "uncontaminated soil" at a CCDD facility or an uncontaminated soil fill operation within an MSA County excluding Chicago provided the pH of the soil is within the range of 6.25- 9.0, inclusive.

(5) When the Engineer determines soil cannot be managed according to Articles 669.09(a)(1) through (a)(4) above, the soil shall be managed and disposed of off-site as a non-special waste, special waste, or hazardous waste as applicable.

(b) Soil Analytical Results Do Not Exceed Most Stringent MAC. When the soil analytical results indicate that detected levels do not exceed the most stringent MAC but the pH of the soil is less than 6.25 or greater than 9.0, the excavated soil can be utilized within the construction limits or managed and disposed of off-site as "uncontaminated soil" according to Article 202.03. However the excavated soil cannot be taken to a CCDD facility or an uncontaminated soil fill operation.

(c) Groundwater. When groundwater analytical results indicate the detected levels are above Appendix B, Table E of 35 Illinois Administrative Code 742, the most stringent Tier 1 Groundwater Remediation Objectives for Groundwater Component of the Groundwater Ingestion Route for Class 1 groundwater, the groundwater shall be managed off-site as a special waste.

All groundwater encountered within lateral trenches may be managed within the trench and allowed to infiltrate back into the ground. If the groundwater cannot be managed within the trench it must be removed as a special or hazardous waste. The Contractor is prohibited from managing groundwater within the trench by discharging it through any existing or new storm sewer. The Contractor shall install backfill plugs within the area of groundwater contamination.

One backfill plug shall be placed down gradient to the area of groundwater contamination. Backfill plugs shall be installed at intervals not to exceed 50 ft (15 m). Backfill plugs are to be 4 ft (1.2 m) long, measured parallel to the trench, full trench width and depth. Backfill plugs shall not have any fine aggregate bedding or backfill, but shall be entirely cohesive soil or any class of concrete. The Contractor shall provide test data that the material has a permeability of less than 10^{-7} em/sec according to ASTM D 5084, Method A or per another test method approved by the Engineer."

Revise Article 669.14 of the Standard Specifications to read:

"669.14 Final Environmental Construction Report. At the end of the project, the Contractor will prepare and submit three copies of the Environmental Construction Report on the activities conducted during the life of the project, one copy shall be submitted to the Resident Engineer, one copy shall be submitted to the District's Environmental Studies Unit, and one copy shall be submitted with an electronic copy in Adode.pdf format to the Geologic and Waste Assessment Unit, Bureau of Design and Environment, IOOT, 2300

South Dirksen Parkway, Springfield, Illinois 62764. The technical report shall include all pertinent information regarding the project including, but not limited to:

(a) Measures taken to identify, monitor, handle, and dispose of soil or groundwater containing regulated substances, to prevent further migration of regulated substances, and to protect workers,

(b) Cost of identifying, monitoring, handling, and disposing of soil or groundwater containing regulated substances, the cost of preventing further migration of regulated substances, and the cost for worker protection from the regulated substances. All cost should be in the format of the contract pay items listed in the contract plans (identified by the preliminary environmental site assessment (PESA) site number),

(c) Plan sheets showing the areas containing the regulated substances,

(d) Field sampling and testing results used to identify the nature and extent of the regulated substances,

(e) Waste manifests (identified by the preliminary environmental site assessment (PESA)
site number) for special or hazardous waste disposal, and

(f) Landfill tickets (identified by the preliminary environmental site assessment (PESA) site number) for non-special waste disposal."

Revise the second paragraph of Article 669.16 of the Standard Specifications to read:

"The transportation and disposal of soil and other materials from an excavation determined to be contaminated will be paid for at the contract unit price per cubic yard (cubic meter) for NON-SPECIAL WASTE DISPOSAL, SPECIAL WASTE DISPOSAL, or HAZARDOUS WASTE DISPOSAL."

Qualifications. The term environmental firm shall mean an environmental firm with at least five (5) documented leaking underground storage tank (LUST) cleanups or that is pre-qualified in hazardous waste by the Department. Documentation includes but not limited to verifying remediation and special waste operations for sites contaminated with gasoline, diesel, or waste oil in accordance with all Federal, State, or local regulatory requirements and shall be provided to the Engineer for approval. The environmental firm selected shall not be a former or current consultant or have any ties with any of the properties contained within and/or adjacent to this construction project.

General. This Special Provision will likely require the Contractor to subcontract for the execution of certain activities.

All contaminated materials shall be managed as either "uncontaminated soil" or non-special waste. This work shall include monitoring and potential sampling, analytical testing, and management of a material contaminated by regulated substances. The Environmental Firm shall continuously monitor all soil excavation for worker protection and soil contamination. **Phase I Preliminary Engineering information is available**

upon request. Soil samples or analysis without the approval of the Engineer will be at no additional cost to the City. The lateral distance is measured from centerline and the farthest distance is the offset distance or construction limit whichever is less.

The Environmental Firm shall take a soil sample from each of the following areas within the area to be excavated or graded. Each soil sample shall be analyzed for the TCL SOIL ANALYSIS and the results compared to the maximum allowable concentration (MAC) for chemical constituents in uncontaminated soil established pursuant to Subpart F of 35 Illinois Administrative Code 1100.605. Any area that the analytical results exceed the most stringent MAC value shall be managed and disposed of in according to Articles 669.09. Any area that the analytical results indicate that detected levels do not exceed the most stringent MAC, the excavated soil can be utilized within the construction limits or managed and disposed of off-site as "uncontaminated soil" according to Article 202.03.

- Station 96+00 to Station 100+00 0 to 300 feet LT (Horner Park, PESA Site 1907-1, 2741 West Montrose Avenue). Contaminants of concern sampling parameters: VOCs, PNAs, and Metals.
- Station 100+00 to Station 103+50 0 to 80 feet LT (Zagone Studios, PESA Site 1907-6, 2600 Irving Park Road). Contaminants of concern sampling parameters: VOCs, PNAs, and Metals.
- Station 97+00 to Station 98+50 0 to 80 feet RT (River Park North Townhomes on the Park, PESA Site 1907-3, 2600-2800 blocks of West Irving Park Road). Contaminants of concern sampling parameters: VOCs, PNAs, and Metals.
- Station 98+50 to Station 100+00 0 to 80 feet RT (Vacant Land and Path, PESA Site 1907-4). Contaminants of concern sampling parameters: VOCs, SVOCs, and Metals.
- Station 100+00 to Station 130+00 0 to 80 feet RT (Closed Building, PESA Site 1907-7, 2601 West Irving Park Road). Contaminants of concern sampling parameters: VOCs, PNAs, and Metals.

Basis of Payment. Target compound list, TCL SOIL ANALYSIS using EPA Method 8260B for VOCs, EPA Method 8270C for SVOCs, EPA Method 8081A for Pesticides, and an ICP instrument and EPA Methods 6010B, 7471A, 1311(extraction), 6010B, and 7470A for metals. This price shall include transporting the sample from the job site to the laboratory.

S:\GEN\WPDOCS\GOBELMAN\Districts\Distr1\RMP\372-1907sp.docx rev August 21, 2013

ITEM NO. 128 78300100 PAVEMENT MARKING REMOVAL

Description. Work under this item shall be performed according to IDOT BDE Special Provision "Pavement Marking Removal".

ITEM NO. 133 X0321809 PERMANENT GROUND ANCHOR

Effective: October 4, 1995
Revised: December 28, 2016

This work shall consist of designing, furnishing, installing, testing and stressing permanent cement-grouted ground anchors according to the plans and the special provisions. This work also includes the furnishing and installing of the anchorage head assemblies.

This is a performance specification for a single ground anchor. The Contractor is given the responsibility for the ground anchor design, construction and performance. The anchor bond lengths shown on the plans are estimated based on the soil data and were determined according to AASHTO Specifications. The Contractor shall select the ground anchor type, the installation method and determine the bond length and anchor diameter. The Contractor shall be responsible for installing ground anchors that will develop the design capacity indicated on the Contract Plans according to the testing subsection of this Specification.

SITE GEOLOGY AND SOILS CONDITIONS

The geologic conditions for this project are represented by the boring information shown on the plans. The Contractor, utilizing his/her expertise, shall be responsible for interpreting the data, including but not limited to, the making of additional borings as necessary to be fully familiar with the existing conditions in order to design and successfully install the permanent ground anchors as specified. Variations in geologic deposits, rock surface or ground water elevations, etc., are to be expected between borings and shall not be considered a change in site conditions as defined by Article 104.03 of the Standard Specifications.

SUBMITTALS

Qualifications. The Contractor performing the work described in this Specification shall have installed permanent ground anchors for a minimum of three (3) years. At the time of the preconstruction meeting, the Contractor shall submit a list containing at least five (5) projects, completed within the last three (3) years, where the Contractor has installed permanent ground anchors. A brief description of each project and a reference shall be included for each project listed. As a minimum, the reference shall include an individual's name, company and current phone number.

The Contractor shall submit a list identifying the engineer, drill operators and on-site supervisors who shall be assigned to the project. The list shall contain a summary of each individual's experience and it shall be complete enough for the Engineer to determine whether or not each individual has satisfied the following qualifications.

The Contractor shall assign an engineer to supervise the work with at least three (3) years of experience in the design and construction of permanently anchored structures. The Contractor may not use consultants or manufacturer's representatives in order to meet the requirements of this section. Drill operators and on-site supervisors shall have a minimum of one (1)-year experience installing permanent ground anchors with the Contractor's organization.

Work shall not be started on any ground anchor wall system nor materials ordered until approval of the Contractor's qualifications are given. The Engineer may suspend the ground anchor work if the Contractor substitutes unqualified personnel for approved personnel during construction. If work is suspended due to the substitution of unqualified personnel, the Contractor shall be fully liable for additional costs resulting from the suspension of work and no adjustments to contract time resulting from suspension will be allowed.

Shop plans. At least four weeks before work is to begin, the Contractor shall submit to the Engineer for review and approval complete shop plans and design calculations prepared and sealed by an Illinois Licensed Professional Engineer, describing the ground anchor system or systems intended for use. The submittal shall include the following:

(1) A ground anchor schedule giving:

   (a) Ground anchor number

   (b) Ground anchor design load

   (c) Type and size of tendon

   (d) Minimum total anchor length

   (e) Minimum bond length

   (f) Minimum tendon length

   (g) Minimum unbonded length

(2) A drawing of the ground anchor tendon and the corrosion protection system, including details for the following:

   (a) Spacers separating elements of tendon and their location

   (b) Centralizers and their location

   (c) Unbonded length corrosion protection system

   (d) Bond length corrosion protection system

   (e) Anchorage head assembly and trumpet

   (f) Anchorage cover corrosion protection system

   (g) Drilled or formed hole size

(h) Level of each stage of grouting

(i) Any revisions to structure details necessary to accommodate the ground anchor system intended for use.

(3) The grout mix design and procedures for placing the grout.

No work on ground anchors shall begin until shop plans have been approved in writing by the Engineer. Such approval shall not relieve the Contractor of any responsibility under the contract for the successful completion of the work.

MATERIALS

Prestressing Steel: Ground anchor tendons shall consist of single or multiple elements of one of the following prestressing steels:

1) Uncoated, seven-wire strands, conforming to AASHTO M203 (M203M)

2) Indented, seven-wire strands, conforming to ASTM A886 (A886M)

3) Epoxy coated, seven-wire strands, conforming to ASTM A882 (A882M)

4) Steel bars conforming to AASHTO M275 (M275M)

Prestressing Steel Couplers: Prestressing steel couplers shall be capable of developing 95 percent of the minimum specified ultimate tensile strength of the prestressing steel.

Grout: Cement shall be Type I, II or III portland cement conforming to Section 1001 of the Standard Specifications. Cement used for grouting shall be fresh and shall not contain any lumps or other indications of hydration or "pack set."

Aggregate shall conform to the requirements for fine aggregate Section 1003 of the Standard Specifications.

Admixtures may be used in the grout subject to the approval of the Engineer. Expansive admixtures may only be added to the grout used for filing sealed encapsulations, trumpets, anchorage head assemblies and covers. Accelerators shall not be used.

Water for mixing grout shall be according to Section 1002 of the Standard Specifications.

Steel Elements: Anchorage head assemblies, including bearing and wedge plates, shall be fabricated from steel conforming to AASHTO M270 (M270M) Grade 36 (250), or be a ductile iron casting conforming to ASTM A536.

Trumpets used to provide a transition from the anchorage head assembly to the unbonded length corrosion protection shall be fabricated from a steel pipe or tube conforming to the requirements of ASTM A53 (A53M) for pipe or ASTM A500 (A500M) for tubing. Minimum wall thickness shall be 0.20 inch (5 mm).

Anchorage covers used to enclose exposed anchorages shall be fabricated from steel, steel pipe, steel tube, or ductile cast iron conforming to the requirement of AASHTO M270 (M270M) Grade 36 (250) for steel, ASTM A53 (A53M) for pipe, ASTM A500 (A500M) for tubing, and ASTM A536 for ductile cast iron. Minimum thickness shall be 0.10 inch (2.5 mm).

Corrosion Protection Elements: Corrosion inhibiting grease shall conform to the requirements of the Post Tensioning Institute's "Specifications for Unbonded Single Strand Tendons," Section 3.2.5.

The sheath for the unbonded length of a tendon shall consist of one of the following:

(1) Seamless polyethylene (PE) tube having a minimum wall thickness of 60 mils (1525 microns) plus or minus 10 mils (250 microns). The polyethylene shall be cell classification 334413 by ASTM D3350.

(2) Seamless polypropylene tube having a minimum wall thickness of 60 mils (1525 microns) plus or minus 10 mils (255 microns). The polypropylene shall be cell classification PP210B55542-11 by ASTM D4101.

(3) Heat shrinkable tube consisting of a radiation crosslinked polyolefin tube internally coated with an adhesive sealant. The minimum tube wall thickness before shrinking shall be 24 mils (610 microns). The minimum adhesive sealant thickness shall be 20 mils (510 microns).

(4) A corrugated tube conforming to the requirement of the encapsulation for the tendon bond length.

Encapsulation for the tendon bond length shall consist of one of the following:

(1) Corrugated high density polyethylene (HDPE) tube having a minimum wall thickness of 30 mils (760 microns) and conforming to AASHTO M252 requirements.

(2) Deformed steel tube or pipe having a minimum wall thickness of 25 mils (635 microns).

(3) Corrugated polyvinyl chloride (PVC) tube having a minimum wall thickness of 30 mils (760 microns). (ASTM D1784) class 13464-B

(4) Fusion-bonded epoxy conforming to the requirements of AASHTO M284 (M284M), except that it shall have a film thickness of 15 mils (380 microns).

Miscellaneous Elements: The bondbreaker for a tendon shall consist of smooth plastic tube or pipe that is resistant to aging by ultra-violet light and that is capable of withstanding abrasion, impact and bending during handling and installation.

Spacers for separation of elements of a multi-element tendon shall permit the free flow of grout. They shall be fabricated from plastic, steel or material which is not detrimental to the prestressing steel. Wood shall not be used.

Centralizers shall be fabricated from plastic, steel or material which is not detrimental to either the prestressing steel or any element of the tendon corrosion protection. Wood shall not be used.

FABRICATION

Tendons for ground anchors may be either shop or field fabricated from materials conforming to this specifications requirements. Tendons shall be fabricated as shown on the approved shop plans.

Bond Length and Tendon Bond Length: The Contractor shall determine the bond length necessary to satisfy the load test requirements. The minimum bond length shall be 10 ft (3 m) in rock, 15 ft (4.6 m) in soil. The minimum tendon bond length shall be 10 ft (3 m).

Spacers shall be placed along the tendon bond length of multi-element tendons so that the prestressing steel will bond to the grout. They shall be located at 10 ft (3 m) maximum centers with the upper one located a maximum of 5 ft (1.5 m) from the top of the tendon bond length and the lower one located a maximum of 5 ft (1.5 m) from the bottom of the tendon bond length.

Centralizers shall be able to maintain the position of the tendon so that a minimum of 0.75 inches (19 mm) of grout cover is obtained on the tendons at all locations along the tendons. They shall be located at 5 ft (1.5 m) maximum centers with the lower one located 1 ft (305 mm) from the bottom of the bond length. Centralizers are not required on tendons installed utilizing a hollow-stem auger if it is grouted through the auger and the drill hole is maintained full of a stiff grout 9 inch (230 mm) slump or less during extraction of the auger, or when installed utilizing a pressure injection system in coarse grained soils using grout pressures greater than 150 psi (1035 kPa).

Encapsulation Protected Ground Anchor Tendon: The tendon bond length shall be encapsulated by a grout-filled corrugated plastic or deformed steel tube, or by a fusion-bonded epoxy coating. The tendon can be grouted inside the encapsulation prior to inserting the tendon in the drill hole or after the tendon has been placed in the drill hole. Punching holes in the encapsulation and allowing the grout to flow from the encapsulation to the drill hole, or vice versa, will not be permitted. The tendon shall be centralized within the encapsulation and the tube sized to provide an average of 0.20 inch (5 mm) of grout cover for the prestressing steel. The anchorage device of tendons protected with fusion-bonded epoxy shall be electrically isolated from the structure.

Unbonded Length: The unbonded length of the tendon shall be a minimum of 15 ft (4.6 m) or as indicated on the plans.

Corrosion protection shall be provided by a sheath completely filled with corrosion inhibiting grout, or a heat shrinkable tube. Continuity of corrosion protection shall be provided at the transition from the bonded length to unbonded length of the tendon.

If the sheath provided is not a smooth tube, then a separate bondbreaker must be provided to prevent the tendon from bonding to the anchor grout surrounding the unbonded length.

Anchorage and Trumpet: Nonrestressable anchorages may be used unless restressable anchorages are designated on the plans.

The trumpet shall be welded to the bearing plate. The trumpet shall have an inside diameter at least 1/4 inch (6 mm) larger than the hole in the bearing plate. The trumpet shall be long enough to accommodate movements of the structure during testing and stressing. For strand tendons with encapsulation over the unbonded length, the trumpet shall be long enough to enable the tendons to make a transition from the diameter of the tendon in the unbonded length to the diameter of the tendon at the anchorage head assembly without damaging the encapsulation. Trumpets shall be filled with grout and have a temporary seal provided between the trumpet and the unbonded length corrosion protection.

Tendon Storage and Handling: Tendons shall be stored and handled in such a manner as to avoid damage or corrosion. Damage to tendon prestressing steel as a result of abrasions, cuts, nicks, welds and weld splatter will be cause for rejection by the Engineer. Grounding of welding leads to the prestressing steel is not permitted. Prior to inserting a tendon into the drilled hole, its corrosion protection elements shall be examined for damage. Any damage found shall be repaired in a manner approved by the Engineer.

INSTALLATION

The first two (2) anchors of each level should be installed and performance tested successfully before drilling any other anchors at that level. In the event that one or both anchors fail the performance test, the Contractor shall re-evaluate the installation procedure and take necessary corrective action. In addition, the first two (2) anchors installed after the Contractor takes necessary corrective action shall be performance tested. The above process shall be repeated until these anchors pass the performance test.

The Contractor shall follow the same installation procedures that are used on the two (2) successful performance test anchors.

Drilling: The drilling method used may be core drilling, rotary drilling, percussion drilling, auger drilling or driven casing. The method of drilling used shall be that which prevents loss of ground above the drilled hole that may be detrimental to the structure or existing structures. Casing for anchor holes, if used, shall be removed, unless permitted by the Engineer to be left in place. Excessive amounts of water shall not be used in the drilling operation. Inclination and alignment shall be within plus or minus 3 degrees of the planned angle at the anchorage head assembly. Drilling in shale shall require the hole to be completed, tendon inserted, and grouted within the same working day.

Tendon Insertion: The tendon shall be inserted into the drilled hole to the desired depth without difficulty. When the tendon cannot be completely inserted it shall be removed and the drill hole cleaned or redrilled to permit insertion. Partially inserted tendons shall not be driven or forced into the hole.

Grouting: The grouting equipment shall produce a grout free of lumps and undispersed cement. A positive displacement grout pump shall be used. The pump shall be equipped with a pressure

gauge to monitor grout pressures. The pressure gauge shall be capable of measuring pressures of at least 150 psi (1035 kPa) or twice the actual grout pressures used, whichever is greater. The grouting equipment shall be sized to enable the grout to be pumped in one continuous operation. The mixer shall be capable of continuously agitating the grout.

The grout shall be injected from the lowest point of the drilled hole. The grout may be pumped through grout tubes, casing, hollow-stem augers or drill rods. The grout may be placed before or after insertion of the tendon. The quantity of the grout and the grout pressures shall be recorded. The grout pressures and grout takes shall be controlled to prevent excessive heave of the ground or fracturing of rock formations.

Except where indicated below, the grout above the top of the bond length may be placed at the same time as the bond length grout, but it shall not be placed under pressure. The grout at the top of the drill hole shall stop 6 inches (150 mm) from the back of the trumpet.

If the ground anchor is installed in a fine-grained soil using a drilled hole larger than 6 inches (150 mm) in diameter, then the grout above the top of the bond length shall be placed after the ground anchor has been load tested. The entire drill hole may be grouted at the same time if it can be demonstrated that the ground anchor system does not derive a significant portion of its load resistance from the soil above the bond length portion of the ground anchor.

If grout protected tendons are used for ground anchors anchored in rock, then pressure grouting techniques shall be utilized. Pressure grouting requires that the drill hole be sealed and that the grout be injected until a 50 psi (345 kPa) grout pressure can be maintained on the grout within the bond length for a period of 5 minutes.

Upon completion of grouting, the grout tube may remain in the drill hole provided it is filled with grout.

After grouting, the tendon shall not be loaded for a minimum of three days.

Trumpet and Anchorage: The corrosion protection surrounding the unbonded length of the tendon shall extend into the trumpet a minimum of 6 inches (150 mm) beyond the bottom seal in the trumpet.

The corrosion protection surrounding the unbonded length of the tendon shall not contact the bearing plate or the anchorage head assembly during load testing or stressing.

The trumpet shall be completely filled with corrosion inhibiting grout. The grout shall be placed after the ground anchor has been load tested and locked off at the design load. The Contractor shall demonstrate that the procedures selected for placement of grout will produce a completely filled trumpet and anchorage head assembly.

Anchorages not encased in concrete wall fascia shall be covered with a corrosion inhibiting grout-filled steel enclosure.

TESTING AND STRESSING

Each ground anchor shall be load tested by the Contractor in the presence of the Engineer. No load greater than 10 percent of the design load may be applied to the ground anchor prior to load testing. The test load shall be simultaneously applied to the entire tendon.

Testing Equipment: Two dial gauges or vernier scales capable of measuring displacements to 0.001 inch (25 microns) shall be used to measure ground anchor movement on either side of the jack from two independent points. They shall have adequate travel so total ground anchor movement can be measured without resetting the devices.

A hydraulic jack and pump shall be used to apply the test load. The jack and a calibrated pressure gauge shall be used to measure the applied load. The pressure gauge shall be graduated in 100 psi (690 kPa) increments or less. When the theoretical elastic elongation of the total anchor length at the maximum test load exceeds the ram travel of the jack, the procedure for recycling the jack ram shall be included in the working drawings. Each increment of test load shall be applied in one minute or less.

A calibrated reference pressure gauge shall be available at the site. The reference gauge shall be calibrated with the test jack and pressure gauge.

An electrical resistance load cell and readout shall be provided when performing a creep test.

The stressing equipment shall be placed over the ground anchor tendon in such a manner that the jack, bearing plates, load cell and stressing anchorage are axially aligned with the tendon and the tendon is centered within the equipment.

Performance Test: Five percent of the ground anchors or a minimum of three ground anchors, whichever is greater shall be performance tested according to the following procedures. The Engineer shall select the ground anchors to be performance tested. The remaining anchors shall be tested according to the proof test procedures.

The performance test shall be made by incrementally loading and unloading the ground anchor according to the following schedule unless a different maximum test load and schedule are indicated on the plans. The load shall be raised from one increment to another immediately after recording the ground anchor movement. The ground anchor movement, on either side of the jack, shall be measured and recorded to the nearest 0.001 inch (25 micron) with respect to the independent fixed reference points at the alignment load and at each load increment. The load shall be monitored with a pressure gauge. The reference pressure gauge shall be placed in series with the pressure gauge during each performance test. If the load determined by the reference pressure gauge and the load determined by the pressure gauge differ by more than 10 percent, the jack, pressure gauge and reference pressure gauge shall be recalibrated. At load increments other than the maximum test load, the load shall be held just long enough to obtain the movement reading.

Performance Test Schedule

Load	Load (Continued)
AL	AL
0.25DL*	0.25DL
AL	0.50DL
0.25DL	0.75DL
0.50DL*	1.00DL
AL	1.20DL*
0.25DL	AL
0.50DL	0.25DL
0.75DL*	0.50DL
AL	0.75DL
0.25DL	1.00DL
0.50DL	1.20DL
0.75DL	1.33DL*
1.00DL*	(Max. test load)
	Reduce to lock-off load (1.00DL)

Where: AL = Alignment Load

DL = Design load for ground anchor

* = Graph required

The maximum test load in a performance test shall be held for 10 minutes. The jack shall be repumped as necessary in order to maintain a constant load. The load hold period shall start as soon as the maximum test load is applied and the ground anchor movement shall be measured and recorded at 1, 2, 3, 4, 5, 6 and 10 minutes. If the ground anchor movements between 1 minute and 10 minutes exceed 0.04 inch (1 mm), the maximum test load shall be held for an additional 50 minutes. If the load hold is extended, the ground anchor movement shall be recorded at 15, 20, 25, 30, 45 and 60 minutes.

A graph shall be constructed showing a plot of ground anchor movement versus load for each load increment marked with an asterisk (*) in the performance test schedule and a plot of the residual ground anchor movement of the tendon at each alignment load versus the highest previously applied load. Graph format shall be approved by the Engineer prior to use.

Proof Test: The proof test shall be performed by incrementally loading the ground anchor according to the following schedule. The load shall be raised from one increment to another immediately after recording the ground anchor movement. The ground anchor movement, on either side of the jack, shall be measured and recorded to the nearest 0.001 inch (25 micron) with respect to the independent fixed reference points at the alignment load and at each increment of load. The load shall be monitored with a pressure gauge. At load increments other than the maximum test load, the load shall be held just long enough to obtain the movement reading.

Proof Test Schedule

Load	Load (Continued)
AL	1.00DL
0.25DL	1.20DL
0.50DL	1.33DL
0.75DL	(Max. test load)
	Reduce to lock-off load (1.00DL)

Where: AL = Alignment Load

DL = Design load for ground anchor

The maximum test load in a proof test shall be held for 10 minutes. The jack shall be repumped as necessary in order to maintain a constant load. The load hold period shall start as soon as the maximum test load is applied and the ground anchor movement shall be measured and recorded at 1, 2, 3, 4, 5, 6 and 10 minutes. If the ground anchor movement between 1 minute and 10 minutes exceeds 0.04 inch (1 mm), the maximum test load shall be held for an additional 50 minutes. If the load hold is extended, the ground anchor movement shall be recorded at 15, 20, 25, 30, 45 and 60 minutes. A graph shall be constructed showing a plot of ground anchor movement versus load for each load increment in the proof test.

Creep Test: Creep tests shall be performed only if required by the plans. The Engineer shall select the ground anchor(s) to be creep tested.

The creep test shall be made by incrementally loading and unloading the ground anchor according to the performance test schedule used. At the end of each loading cycle, the load shall be held

constant for the observation period indicated in the creep test schedule below unless a different maximum test load is indicated on the plans. The times for reading and recording the ground anchor movement during each observation period shall be 1, 2, 3, 4, 5, 6, 10, 15, 20, 25, 30, 45, 60, 75, 90, 100, 120, 150, 180, 210, 240, 270 and 300 minutes as appropriate. Each load hold period shall start as soon as the test load is applied. In a creep test the pressure gauge and reference pressure gauge will be used to measure the applied load, and the load cell will be used to monitor small changes of load during a constant load hold period. The jack shall be repumped as necessary in order to maintain a constant load.

Creep Test Schedule

Load	Observation Period (Minutes)
AL	
0.25DL	10
0.50DL	30
0.75DL	30
1.00DL	45
1.20DL	60
1.33DL	300

A graph shall be constructed showing a plot of the ground anchor movement and the residual movement measured in a creep test as described for the performance test. Also, a graph shall be constructed showing a plot of the ground creep movement for each load hold as a function of the logarithm of time.

Ground Anchor Load Test Acceptance Criteria: A performance-tested or proof-tested ground anchor with a 10 minute load hold is acceptable if the:

(1) Ground anchor resists the maximum test load with less than 0.04 inch (1 mm) of movement between 1 minute and 10 minutes; and

(2) Total movement at the maximum test load exceeds 80 percent of the theoretical elastic elongation of the unbonded length.

A performance-tested or proof-tested ground anchor with a 60 minute load hold or a creep tested ground anchor is acceptable if the:

(1) Ground anchor resists the maximum test load with a creep rate that does not exceed 0.08 inch (2 mm) in the last log cycle of time; and

(2) Total movement at the maximum test load exceeds 80 percent of the theoretical elastic elongation of the unbonded length.

If the total movement of the ground anchor at the maximum test load does not exceed 80 percent of the theoretical elastic elongation of the unbonded length, the ground anchor shall be replaced at the Contractor's expense.

A ground anchor which has a creep rate greater than 0.08 inch (2 mm) per log cycle of time can be incorporated into the structure at a design load equal to one-half of its failure load. The failure load is the load resisted by the ground anchor after the load has been allowed to stabilize for 10 minutes.

When a ground anchor fails, the Contractor shall modify the design and/or the installation procedures. These modifications may include, but are not limited to, installing a replacement ground anchor, reducing the design load by increasing the number of ground anchors, modifying the installation methods, increasing the bond length or changing the ground anchor type. Any modification which requires changes to the structure shall be approved by the Engineer. Any modifications of design or construction procedures shall be without additional cost to the Department and without extension of contract time.

Retesting of a ground anchor will not be permitted, except that regrouted ground anchors may be retested each time they are regrouted.

Lock Off: Upon successful completion of the load testing, the ground anchor load shall be reduced to the design load indicated on the plans and transferred to the anchorage device. The ground anchor may be completely unloaded prior to lock-off. After transferring the load and prior to removing the jack, a lift-off load reading shall be made. The lift-off load shall be within 10 percent of the specified lock-off load. If the load is not within 10 percent of the specified lock-off load, the anchorage shall be reset and another lift-off load reading shall be made. This process shall be repeated until the desired lock-off load is obtained.

METHOD OF MEASUREMENT

This work will be measured per each permanent ground anchor, installed according to the plans or as approved by the Commissioner, and passing the testing program(s) required in this Special Provision.

BASIS OF PAYMENT

This work will be paid for at the contract unit price each for PERMANENT GROUND ANCHORS and shall be compensation in full for designing, furnishing, installing and testing the permanent ground anchors and anchorage head assemblies.

ITEM NO. 134 X0321963 MICRO PILES
ITEM NO. 136 X0323432 MICROPILE LOAD TEST
ITEM NO. 137 X0323433 MICROPILE PROOF LOAD TEST

Description. Work under this item shall be performed according to Guide Bridge Special Provision for MICROPILES.

ITEM NO. 135 X0323360 WOODEN POLE REMOVAL

Description: This work shall consist of removing existing wooden pole where shown on the plans or as directed by the Engineer. The wooden poles shall be disposed of off-site. Holes remaining within embankment areas shall be filled and compacted as required in Section 205.

Method of Measurement: This work shall be measured for payment per each.

Basis of Payment: This work will be paid for at the contract unit price per each for WOODEN POLE REMOVAL, which price shall include all labor, equipment, and materials necessary for the specified work herein.

ITEM NO. 138 X0324044 EROSION CONTROL, TEMPORARY PIPE SLOPE DRAIN

Description: This work shall consist of furnish, installation and maintenance of pipe, anchor devices, filter fabric, rip rap and flared end sections to convey surface runoff down the face of fill slopes to minimize erosion on the slope face according to the details shown on the plans and as directed by the Engineer.

Materials: Materials shall be according to the following:

(a) Polyethylene Pipe 1040.04

(b) Flexible Polyethylene Tubing..... ASTM F667

(c) Geotextile Fabric..... 1080.02

(d) Filter Fabric..... 1080.03

(e) Rip Rap..... 1005.01

(f) Staples ..... 1081.10(d)

(g) Flared End Section. The flared end section shall be of the same material and size used for the temporary pipe slope drain.

Construction Requirements: The erosion control, temporary pipe slope drain shall be securely anchored to the slope using procedures recommended by the manufacturer. All connections are to be watertight. A flared end section shall be attached to the inlet end of the pipe and shall be relocated each time the pipe is extended. The height of the earth dike at the location of the temporary pipe slope drain shall be at least 2 times the diameter of the pipe. To prevent erosion around the flared end section, geotextile fabric shall be placed under the flared end section and shall extend 5 feet in front of it and up the front face of the berm.

Method of Measurement: This work will be measured for payment per each, where each is defined as one complete installation.

Basis of Payment: This work will be paid for at the contract unit price per each for EROSION CONTROL, TEMPORARY PIPE SLOPE DRAIN.

ITEM NO. 139 X0327213 REMOVE TEMPORARY PIPE SLOPE DRAIN

Description: This work shall consist of removal of pipe, anchor devices, filter fabric, rip rap and flared end sections as shown on the plans and as directed by the Engineer.

Construction Requirements: The area around the pipe location shall be graded to match adjacent surface.

Method of Measurement: This work will be measured for payment per each, where each is pipe removed. Removal of anchor devices, filter fabric, rip rap and flared end sections is considered incidental to this pay item and will not be measured for payment. Grading as a part of pipe removal is considered incidental to this pay item and will not be measured for payment.

Basis of Payment: This work will be paid for at the contract unit price per each for REMOVE TEMPORARY SLOPE DRAIN PIPE.

ITEM NO. 140 X0327552 TREE GRATE REMOVAL

Description: This work shall consist of removing tree grate as shown on the plans and taking it off site.

General: The thickened PCC sidewalk around the grate shall be removed. The pit shall be filled with fine aggregate meeting Article 1003.04.

Method of Measurement: This work shall be measured for payment in each.

Basis of Payment: This work will be paid for at the contract unit price per each for TREE GRATE REMOVAL. Removal of thickened sidewalk around the pit and filling the pit with fine aggregate shall be included in TREE GRATE REMOVAL.

ITEM NO. 141 X0327691 GRATING FOR CONCRETE HEADWALL NO 1

Description. This work shall include fabricating and installing metal grating according to section 542 of the Standard Specifications, as shown on the plans and as directed by the Commissioner.

Materials. Material shall be according to Article 542.07 (b)(2) of the Standard Specifications. Steel grating members shall be hot-dip galvanized according to AASHTO M 111. Anchor bolts shall be according to Article 1006.27(f) and shall be expansion type. Substitution for epoxy type anchor will be acceptable and shall be according to Section 584 of the Standard Specifications.

Method of Measurement: This work will be measured for payment per each, installed according to the plans or as approved by the Commissioner.

Basis of Payment: This work will be paid for at the contract unit price per each for GRATING FOR CONCRETE HEADWALL NO 1, which price shall include all labor, equipment, and materials necessary for the specified work herein.

ITEM NO. 142 X2020502 BRACED EXCAVATION

Description. This work shall include the installation of a bracing system, excavation, and backfilling to the elevation of the existing grade according to Section 502 and the following. The bracing system shall be designed and installed to prevent the movement of soil, structures, pavements and/or utilities adjacent to the excavated area.

Construction Requirements. The bracing system shall support excavations by the use of sheeting, timber or plates. The Contractor shall submit design calculations and shop drawings prepared and sealed by an Illinois Licensed Structural Engineer for the bracing system. Shop drawings shall show all necessary details for the construction of the bracing system. The design calculations and shop drawings shall be submitted to the Engineer for review and approval.

This work shall not proceed without the approval and authorization of the Engineer. However, in any event, the Contractor shall be fully responsible for the safety, stability and adequacy of the bracing system and shall be solely responsible and liable for all damages resulting from his construction operations or from failure or inadequacy of the bracing system.

In the event the bracing system protecting the existing embankment fails or is otherwise inadequate, in the judgment of the Engineer, the Contractor shall, at his own expense, take all necessary steps to restore the embankments to a safe operating condition to the satisfaction of the Engineer.

Bracing members shall be installed as soon as an excavation level is reached to permit their installation. Bracing members shall be completely removed after the excavation is backfilled.

Method of Measurement. This work shall be measured in cubic yards (cubic meters) according to the requirements for structure excavation as specified in Article 502.12 of the Standard Specifications.

Basis of Payment. This work will be paid for at the contract unit price per cubic yard (cubic meter) for BRACED EXCAVATION. Payment for BRACED EXCAVATION will be limited to those locations shown on the plans. All sheeting and bracing members associated with braced excavation will not be measured for payment but shall be included in the cost for BRACED EXCAVATION. No separate payment will be made for structure excavation where BRACED EXCAVATION is shown.

ITEM NO. 143 X2200018 - ORNAMENTAL FENCE

Description. This work shall consist of designing, fabricating and erecting, including drilling and installing anchorage, hardware, and furnishing all labor, materials and equipment, necessary to construct the ornamental fence as shown on the plans and as directed by the Commissioner. This work shall be performed according to the applicable portions of Section 509 of the Standard Specifications and as modified herein.

Materials. All material including posts, vertical, horizontal, and other steel members,
Grade 36..... Article 1006.34 (c);
Hardware for Railings..... Article 1006.29(d);
High Strength Steel Bolts, Nuts, and Washers ..... Article 1006.08(b);
Threaded Anchor Rods ..... Article 1006.09;
Nonshrink Grout ..... Article 1024.02;
Portland Cement Concrete ..... Section 1020

Class SI concrete shall be used. When concrete is mixed in truck mixers or transported in agitating trucks, the time limit for unloading it may be extended to 120 minutes when approved by the Engineer.

Coatings: The posts, post tops, base and cap plates, railings, braces, fittings and hardware shall be polyester powder coated according to Article 1006.29(b)(5) and tested per Article 1006.29 (c). All material shall be hot dip galvanized or galvanize coated after fabrication and prior to polyester powder coating, and the galvanized surfaces shall be prepared according to ASTM D7803 prior to applying the coating. Vent holes for galvanizing shall be placed in the posts and rails at locations that will not allow the accumulation of moisture in the members.

Color: The color of the polyester powder coatings on posts, post tops, base and cap plates, railings, braces, stretcher bars, fittings, hardware and accessories shall be the standard color Black according to ASTM F934.

Construction Requirements. The details shown on the plans generally depict the style and post spacing required for the ornamental fence. The Contractor shall submit design computations prepared and sealed by an Illinois Licensed Structural Engineer for the member sizes and connection details for the ornamental fence railing posts, fencing, handrail, base plate, and anchor assemblies. Fence shall be designed according to AASHTO LRFD Bridge Design Specifications (7th Editions). Shop Drawings indicating plans, elevations, large scale details, sizes, spacing and location of fence members, hardware, general construction and anchorage details shall be submitted to the Commissioner for approval a minimum of 30 days prior to starting fabrication. Submittal shall include relevant manufacturers technical data.

Construction Tolerances:
Materials: Steel Stock Straightness 1/8" end to end, before and after fabrication.
Fabrication Tolerances:

- Vertical posts 1/8" maximum allowable deviation.

- Vertical spacing 1/16" maximum allowable deviation.
- Frame alignment 1/8" maximum allowable deviation.

Product Handling.
Upon receipt at the job site, all materials shall be checked to ensure that no damage occurred during shipping or handling. Materials shall be stored in such a manner to ensure proper ventilation and drainage, and to protect against damage, weather, vandalism, and theft. Use means necessary to protect fencing materials before, during, and after installation. In event of damage, immediately notify the Commissioner and make repairs and replacements necessary at no additional cost to Owner.

Preparation.
Prior to work of this Section, carefully examine installed work of other sections and verify that such work is complete to point where this installation may properly commence. Work required to accurately stake out fence line shall be performed by fence installer. Install fencing in strict accordance with original design and reviewed shop drawings, anchoring components firmly and in accordance with manufacturer's published recommendations.

Installation.
The Contractor shall install concrete footings of the diameter and depth as shown on the plans. The earth spoils from drilling operations shall be removed and disposed of according to Section 202 of the Standard Specifications. The footings shall be spaced to match the fence post spacing. The anchors and fence installation shall be installed after the proper cure time required for the concrete footings.

The Contractor shall mount fence to concrete surface as shown on the plans. At the Contractors option, either cast in place anchor devices or drilled and set anchor rods may be used to attach the posts to the concrete. Drilling and setting of anchor rods shall be according to Article 509.06.

Install fence to elevations indicated. Touch up finish with same material as used for finish coat.

Method of Measurement. This work will be measured for payment in place in feet. The length measured will be the overall length along the top longitudinal railing member through all posts and gaps.

Basis of Payment. This work will be paid for at the contract unit price per foot for ORNAMENTAL FENCE, which price shall include all engineering materials, fabrication, transportation, anchor rods, grout, epoxy grout, concrete footing and erection.

ITEM NO. 144 X5090850 - ORNAMENTAL RAILING

Description. This work shall consist of furnishing and erecting, including all hardware, labor, materials and equipment necessary to construct the ornamental fence as shown on the plans and as directed by the Comissioner. This work shall be performed according to the applicable portions of Section 509 of the Standard Specifications and as modified herein.

Material. All material shall be according to Article 509.02 of the Standard Specifications. Hollow Structural Steel Tubing shall conform to the requirements of ASTM A500, Grade B. All other steel shapes and plates shall conform to the requirements of AASHTO M270 Grade 36.

Non shrink grout shall be according to Article 1024.02.

Cast iron shall be according to Article 1006.16 and shall be coated to match the railing components.

Coatings: The posts, post tops, base and cap plates, railings, braces, fittings and hardware shall be polyester powder coated according to Article 1006.29(b)(5) and tested per Article 1006.29 (c). All material shall be hot dip galvanized or galvanize coated after fabrication and prior polyester powder coating, and the galvanized surfaces shall be prepared according to ASTM D7803 prior to applying the coating. Vent holes for galvanizing shall be placed in the posts and rails at locations that will not allow the accumulation of moisture in the members.

Color: The color shall be approved by the Commissioner prior to ordering materials.

Prevent galvanic action and other forms of corrosion by isolating metals and other materials from direct contact with incompatible materials.

Construction Requirements. Shop Drawings indicating plans, elevations, large scale details, sizes, spacing and location of fence members, hardware, general construction and anchorage details shall be submitted to the Commissioner for approval a minimum of 30 days prior to ordering material. Submittal shall include relevant manufacturers technical date.

Quality Assurance.
Product Options: Information on Drawings and in Specifications establishes requirements for system's aesthetic effects and performance characteristics. Do not modify intended aesthetic effects, as judged solely by Commissioner, except with Commissioner's approval.

Mockups: Build mockups to verify selections made under sample submittals and to demonstrate aesthetic effects and set quality standards for fabrication and installation.
Build mockups for each form and finish of railing consisting of two posts, top rail, infill area, and anchorage system components.

Thermal Movements: Allow for thermal movements from ambient and surface temperature changes acting on exterior railings by preventing buckling, opening of joints, overstressing of components, failure of connections, and other detrimental effects.
Temperature Change: 120 deg F (67 deg C), ambient; 180 deg F (100 deg C), material surfaces.

Metal Surfaces, General: Provide materials with smooth surfaces, without seam marks, roller marks, rolled trade names, stains, discolorations, or blemishes.

Brackets, Flanges, and Anchors: Same metal and finish as supported rails unless otherwise indicated.

Fasteners.
Fastener Materials: Unless otherwise indicated, provide the following:
Uncoated Steel Components: Plated-steel fasteners complying with ASTM B 633, Class Fe/Zn 25 for electrodeposited zinc coating where concealed; Type 304 stainless-steel fasteners where exposed.
Galvanized-Steel Components: Plated-steel fasteners complying with ASTM B 633, Class Fe/Zn 25 for electrodeposited zinc coating.
Dissimilar Metals: Type 316 stainless-steel fasteners.

Fabrication.
General: Fabricate railings to comply with requirements indicated for design, dimensions, member sizes and spacing, details, finish, and anchorage, but not less than that required to support structural loads.
Welded Connections: Cope components at connections to provide close fit, or use fittings designed for this purpose. Weld all around at connections, including at fittings.
At exposed connections, finish exposed welds to comply with NOMMA's "Voluntary Joint Finish Standards" for Type 1 welds: no evidence of a welded joint.
Mechanical Connections: Connect members with concealed mechanical fasteners and fittings.

Close exposed ends of hollow railing members with prefabricated end fittings.

Fabricate joints in a manner to exclude water or provide weep holes where water may accumulate.

Installation.
Perform cutting, drilling, and fitting required for installing railings. Set railings accurately in location, alignment, and elevation; measured from established lines and levels and free of rack.
Set posts plumb within a tolerance of 1/16 inch in 3 feet. Align rails so variations from level for horizontal members and variations from parallel with rake of steps and ramps for sloping members do not exceed 1/4 inch in 12 feet. Anchor posts to metal surfaces as indicated using fittings designed and engineered for this purpose.

Touchup Painting: Immediately after erection, clean field welds, bolted connections, and abraded areas of shop paint, and paint exposed areas with the same material as used for shop painting to comply with SSPC-PA 1 for touching up shop-painted surfaces.

Method of Measurement. This work will be measured for payment in place in feet. The length measured will be the overall length along the top longitudinal railing member through all posts and gaps.

Basis of Payment. This work will be paid for at the contract unit price per foot for ORNAMENTAL RAILING, which price shall include all materials, fabrication, transportation, anchor rods, grout, epoxy grout, concrete footing and erection.

ITEM NO. 145 X5860110 GRANULAR BACKFILL FOR STRUCTURES

Description: Work under this item shall be performed per the 2018 Supplemental Specifications to the April 1, 2016 Standard Specifications for Road and Bridge Construction.

ITEM NO. 146 X6061460 PAVED DITCH (SPECIAL)

Description: This work shall consist of constructing concrete paved ditch according to Section 606, as shown on the plans, and as directed by the Commissioner.

A preformed joint filler is not required at the junction of the paved ditch and the abutment. A ½ in. thick preformed joint filler shall be placed at the junction of paved ditch with any other structure.

Method of Measurement. This work will be measured for payment in place in feet along the flow line of the paved ditch.

Basis of Payment. This work shall be paid for at the contract unit price per foot for PAVED DITCH (SPECIAL).

ITEM NO. 147 X6640555 CHAIN LINK FENCE, 5' (SPECIAL)

Description. This work shall conform to the applicable portions of Section 664 of the Standard Specifications except as modified herein for materials and color.

Materials. Materials shall meet the requirements of Article 664.02 of the Standard Specifications, and as specified below:

Fabric: The fabric shall be woven in 2 inch mesh with 0.148 inch diameter wire meeting the requirements of AASHTO M181, Type IV, Class B (polyvinyl chloride PVC) or ASTM F668 Class 2b (polyvinyl chloride PVC or polyolefin elastomer) coated steel.

Coatings: The tension wire and fabric ties shall be vinyl or polyolefin coated. The posts, post tops, base and cap plates, railings, braces, stretcher bars, fittings and hardware shall either be vinyl, polyolefin or polyester powder coated. All vinyl or polyolefin coating shall be according to the same requirements as the coating of the fabric. All material shall be hot dip galvanized or galvanize coated after fabrication and prior to vinyl, polyolefin, or polyester powder coating, according to Articles 1006.27, 1006.28 and 1006.34 of the Standard Specifications and ASTM F1043. Vent holes for galvanizing shall be placed in the posts and rails at locations that will not allow the accumulation of moisture in the members.

Polyester coating shall conform to 1006.29 (b) (5) and (c) and ASTM F1043. All steel to receive a polyester coating shall be pre-galvanized according to ASTM F1043 with a minimum zinc coating of 0.90 ounces per square foot (G90). All primary components, posts, post tops, base and cap plates, railings, braces, stretcher bars and fittings shall receive a pre-treatment process that cleans and prepares the galvanized surface to assure complete adhesion of the polyester coating after drilling and layout, to ensure maximum corrosion protection. All pre-treated steel shall be finished-color coated with polyester powder applied by the electrostatic spray gun method to a thickness of 2.5 mils and baked at 450° F until cured.

Color: The color of all vinyl, polyolefin or polyester powder coatings on fabric, posts, post tops, base and cap plates, railings, braces, stretcher bars, gates, fittings, hardware and accessories shall be the standard color Black according to ASTM F934.

Method of Measurement. Chain Link fence will be measured for payment in feet, along the top of the fence from center to center of end posts.

Basis of Payment. This work shall be paid for at the contract unit price per foot for CHAIN LINK FENCE, 5' (SPECIAL), which payment shall fully compensate for the material and color requirements specified herein, including posts, tensions wires, stretcher bars, fence fabric, drilling and installation of concrete foundations at each fence posts, removal and disposal of excavated soil, and all labor and equipment to perform the work as specified.

ITEM NO. 148 X7010216 TRAFFIC CONTROL AND PROTECTION, (SPECIAL)

Description. Work under this item shall be performed according to Section 701 of the Standard Specifications, the applicable guidelines contained in the Illinois Manual on Uniform Traffic Control Devices for Streets and Highways, the City of Chicago's Rules and Regulations for Construction in Public Way and any Special Details and Highway Standards contained within the Contract Documents, except as herein modified.

This item of work includes furnishing, installation, maintenance, relocation, covering and subsequent removal at the end of closure period of all signs, traffic cones, barricades, screening, warning lights, metal plates on manholes and trenches, flaggers, ADA compliant temporary ramps and other devices which are to be used for the purpose of detouring, regulating, warning or guiding, both vehicular and pedestrian traffic, during the construction of this improvement.

General Requirements. The Traffic Control and Protection Details included in the Contract Documents represent the minimum required combination of traffic control devices needed for typical construction operations. Conditions created by the Contractor's operation which are not covered by the standard details must be protected by devices which may include, but are not limited to, barrier wall, fencing with screening, arrow board, or temporary ADA compliant ramps, as directed by the Commissioner, at no additional cost to the City. Revisions or modifications to the approved traffic control methods must have the Commissioner's written approval. The cost of this work must be included in the Contract Lump Sum Price for TRAFFIC CONTROL AND PROTECTION, (SPECIAL).

At the preconstruction meeting, the Contractor shall submit both a Traffic Control Plan and a Pedestrian Traffic Control Plan for approval by the Commissioner and must furnish the name of the individual in his/her direct employ who is to be responsible for the installation and maintenance of the traffic control for this project. If the actual installation and maintenance are to be accomplished by a subcontractor, consent must be requested of the Commissioner at the time of the preconstruction meeting in accordance with Article 108.01 of the Standard Specifications. This will not relieve the Contractor of the foregoing requirement for a responsible individual in his/her direct employ.

If the Contractor requests and receives approval from the Commissioner to revise or change the staging of the project from that specified on the Plans, any additional control required due to that request will be considered included in the contract and no additional payment will be made.

Special attention is called to Articles 107.09 and 107.14 of the Standard Specifications and the Highway Standards, Details, Supplemental Specifications and Special Provisions, and Recurring Special Provisions contained herein or in the Plans relating to traffic control.

Special attention must be given to advance guide signs during these operations in order to keep barricade placement consistent with lane assignment. The Contractor shall cover all traffic control devices, which may be inconsistent with traffic patterns during the transfer from one construction stage to another.

The Contractor's vehicle must always move with and not against or across the flow of traffic. These vehicles must enter or leave work areas in a manner, which will not be hazardous to or interfere with normal traffic and must not park or stop except within designated work areas. Personal vehicles will not be permitted to park within the right of way except in specific areas designated by the Commissioner.

The Contractor shall immediately furnish a certified flagger or flaggers if, in the opinion of the Commissioner, the Contractor's construction means or methods warrant. No additional compensation will be made for flaggers. If no flaggers are available the Contractor shall cease operations until they become available.

All signs, signals, traffic cones, barricades, chain link fence, warning lights, Temporary ADA ramps, flaggers, and other traffic control devices must conform to the specifications, special provisions and the latest edition of the "State of Illinois Manual on Uniform Traffic Control Devices." The Contractor shall obtain, erect, maintain, and remove all traffic control devices in accordance with Article 107.14 of the Standard Specifications. Placement and maintenance of all traffic control devices must be as directed by the Commissioner. The Commissioner will be the sole judge as to the acceptability of placement and maintenance of the traffic control devices prescribed in the appropriate standards.

The Contractor shall insure that all barricades, signs, lights and other devices installed by him are operational every day, including Sundays and holidays. In the event of severe weather conditions, the Contractor shall furnish any additional personal required to properly maintain all traffic control devices as directed by the Commissioner.

The Contractor will be responsible for the timely installation, maintenance, relocation and subsequent removal of all temporary signing, barricading and temporary striping necessary to accomplish these detours. At the completion of each stage of construction or whenever detour operations indicate that a relocation or removal of a proposed or existing traffic control device is advisable, as determined by the Commissioner, the Contractor shall relocate or remove said traffic control device. Those traffic control devices which were furnished by the Contractor will remain

the property of the Contractor. Any existing traffic control device removed or relocated by the Contractor will remain the property of the City. All traffic control devices must remain in place until specifically authorized for relocation or removal by the Commissioner.

The Contractor shall be aware of the requirements for coordination of all work in this project and adjoining or overlapping projects and for coordination of barricade placement necessary to provide a uniform traffic detour pattern. The Contractor will not be permitted to erect, change, or remove his/her detour barricade system without the prior approval of the Commissioner.

The placement of barricades and warning signs for the required lane closures must be as specified herein and must proceed in the direction of the flow of traffic. The removal of all signs and barricades must begin at the end of the construction areas and proceed toward oncoming traffic.

Maintenance of Roadways:

Beginning on the date when the Contractor begins work on this project he must assume responsibility for the normal maintenance of all existing roadways within the limits of the improvement and along detour routes. This normal maintenance includes all repair work deemed necessary by the Commissioner including patching of potholes, but shall not include snow removal operations. Traffic control and protection required for this work will be considered included in the lump sum price for TRAFFIC CONTROL AND PROTECTION, (SPECIAL).

Arrow Boards:

A flashing arrow board meeting the requirements of Article 1106.03 of the Standard Specifications must be operating at all times when a lane is closed to traffic on a multi-lane highway. Arrow boards must be provided and located in ahead-on position within each lane closure taper. The cost of furnishing and maintaining arrow boards will be considered included in the contract lump sum price for TRAFFIC CONTROL AND PROTECTION, (SPECIAL).

Pedestrian Traffic Control:

When an existing sidewalk is removed or is otherwise impassable, the Contractor shall install the necessary signs and barricades to direct pedestrian traffic to an alternate pedestrian route. Sidewalk Closed signs (Code No. R11-I102) must be placed at each end of the closed sidewalk section. Type I, Type II, or Type III barricades must be installed in sufficient number to completely close the pathway. Barricades across and along a pathway must have a continuous cane detectable horizontal bar between 4" and 6" above the pavement. Access to and from alternate pedestrian routes must be ADA compliant and must be kept free of any obstructions and hazards. Where construction activities involve sidewalks on both sides of the street, the work must be staged so the both sides of the street are not under construction at the same time and no more than one corner at a time is out of service.

REQUIREMENTS:

1) Barricades may be Type I, II, III
2) Fencing with screen is to be used to protect the construction area.

3) Barricades across and along a pathway must have a continuous cane detectable horizontal bar between 4" and 6" above the pavement.
4) Access to and from alternate pedestrian routes must be ADA compliant.
5) Alternate pedestrian routes must be a hard surface traversable by a wheel chair.
6) When the alternate pedestrian route is within the roadway it must be protected by a continuous concrete barrier or other crash worthy barrier.
7) When the alternate pedestrian route is to or from the existing sidewalk, an ADA compliant plywood ramp must be installed.
8) Use one "Sidewalk Closed" sign at each end of each sidewalk section being reconstructed at the location where the alternate pedestrian route begins.
9) At each point of closure, sufficient numbers of barricades must be used to completely close the pathway.
10) Pedestrian walkways/ routes must be maintained free of any obstructions and hazards such as holes, falling debris, mud, construction equipment, stored materials, etc. and must be broom swept daily or as directed by the Commissioner.
11) All hazards near or adjacent to walkways must be clearly delineated.
12) Where construction activities involve sidewalks on both sides of the street, the work must be staged so that both sidewalks are not out of service at the same time.
13) The Contractor shall maintain pedestrian access to adjacent properties by installing ADA compliant plywood walkways and/ or ramps from the curb line to adjacent property entrances. Pedestrian access to adjacent properties must be uninterrupted until the walk is fully restored.

The cost of this work will be included in the contract lump sum price for TRAFFIC CONTROL AND PROTECTION, (SPECIAL).

Traffic Control Deficiency

Traffic Control Deficiency Deduction shall be per Article 105.03(b) except as herein modified. A deficiency shall also include lack of maintaining pedestrian traffic control, the lack of maintaining access to abutting properties, lack of debris removal, fly dumping, timely and correct placement of temporary and permanent pavement markings, along with delay in implementing all items of work contained within this item.

Method of Measurement. This work will be measured for payment on a lump sum basis.

All temporary striping will be paid for as TEMPORARY PAVEMENT MARKING of the size specified. Pavement marking placed for short term after resurfacing work will be paid for as SHORT TERM PAVEMENT MARKING. Removal of existing pavement markings that conflict with the revised traffic pattern will be paid under the item PAVEMENT MARKING REMOVAL Reflectors on temporary concrete barrier will be paid for as BARRIER WALL RELFECTOR, TYPE B.

Temporary concrete barrier will be paid under TEMPORARY CONCRETE BARRIER, and relocation of temporary concrete barrier will be paid for as RELOCATE TEMPORARY CONCRETE BARRIER. Temporary impact attenuators will be paid for as IMPACT ATTENUATORS, TEMPORARY (FULLY REDIRECTIVE, NARROW) of the type specified, and relocation of temporary impact attenuators will be paid for as IMPACT ATTENUATORS, RELOCATE (FULLY REDIRECTIVE, NARROW), TEST LEVEL 2. Removal of impact attenuators and temporary concrete barrier shall be included in the cost of TRAFFIC CONTROL AND PROTECTION, (SPECIAL). The other work will be considered included in the contract lump sum for TRAFFIC CONTROL AND PROTECTION, (SPECIAL).

Basis of Payment. This work will be paid for at the contract lump sum price for TRAFFIC CONTROL AND PROTECTION, (SPECIAL).

ITEM NO. 149 X8140105 HANDHOLE (SPECIAL)

DESCRIPTION. This item will consist of furnishing and installing a 12" x 12" x 12" open bottom polymer concrete handhole at the locations shown on the plans or as directed by the Engineer.

MATERIALS. The handhole box and cover shall be UL listed and satisfy the requirements of ANSI/SCTE 77 Tier 15. The cover shall be secured by two stainless steel hex head bolts. The cover shall read "ELECTRIC."

INSTALLATION. Installation shall be according to the applicable portions of Section 814 of the Standard Specifications.

A 4" thick (min.) layer of fine wet limestone shall be provided around the handhole's embedded stub section as backfill. Backfill shall be tamped and compacted in 6 in. lifts. A 6" settling pad of coarse gravel shall be provided below the handhole's embedded stub section.

METHOD OF MEASUREMENT. This work will be measured per each handhole installed and will include all labor and material necessary to install the handhole, and includes excavation, backfill, and disposal of surplus excavated material.

BASIS OF PAYMENT. This item will be paid for at the contract unit price each for HANDHOLE (SPECIAL), which payment will be in full for furnishing and installing the polymer concrete handhole complete in place.

ITEM NO. 150 Z0007124 STEEL RAILING (SPECIAL)

Description. This work includes furnishing and erecting metal railings and shall be performed according to applicable portions of Section 509 and as included herein.

Materials. Materials shall be according to the following:

i) Bolts and Fasteners. Steel bolts, nuts, and washers shall be according to ASTM A 307, grade A [ASTM F568, class 4, 6,] or SAE grade 2 with coarse threads.
ii) Bridge Railing. ..... Article 1006.34
iii) Posts..... Article 1006.34
iv) Epoxy Resin Grout ..... Section 1027*
v) High Strength Anchor Bolts. Anchor bolts shall be of the type and dimensions as shown on the plans and shall be in accordance with the following:
   (1) Cast-in-Place anchor bolts or threaded anchor rods in accordance with ASTM A 449; and nuts according to ASTM A 563 of finish and grade matching bolts (AASHTO M 164 or ASTM F 568, class 8.8 with ASTM A 563 class 12 nuts)
   (2) Grout-in anchor stud bolts or fully threaded rods shall be according to ASTM A 193, grade B7; and nuts according to ASTM A 194.
   (3) Galvanized bolts shall have an ultimate tensile strength less than 150,000 psi.

*Epoxy grout shall conform to AASHTO M235, Type IV, Grade 2.

Provide standard and expansion sleeves made from structural steel in accordance with ASTM A 709, grade 36 [ASTM A 709M, grade 250], and galvanized in accordance with AASHTO M 111.

General. Fabrication, inspection, storage, and erection of steel railings shall be according to Section 505, except that galvanized railing and accessories shall be stored according to Article 1006.34(d).

Fabrication. Ensure that venting and pick-up holes in rails and sleeves are shown on the fabricator's shop drawings. Place vent holes on the underside of the rail members as installed. Ensure that post base plates are flat after fabrication.

In addition to the requirements of AASHTO M 111, ensure that the galvanizing is free of general roughness, dross pimples, blisters, and wet storage stain.

Erection. After installing rail elements, paint the exposed rail bolt threads with two coats of zinc-rich paint in accordance with ASTM A 780.

Setting anchor rods shall be according to Article 509.06 of the Standard Specifications.

Method of Measurement. This work will be measured for payment in place in feet. The length measured will be the overall length along the top longitudinal railing member through all posts and gaps.

Basis of Payment. This work will be paid for at the contract unit price per foot for STEEL RAILING (SPECIAL).

ITEM NO. 151 Z0007126 – HANDRAIL REMOVAL

Description: This work shall consist of the removal of existing handrail attached to existing retaining walls as shown on the plans and according to Section 501 of the Standard Specifications or as directed by the Commissioner.

The material shall be disposed of according to Article 202.03.

Method of Measurement. This work will be measured in place in feet. The length measured will be the overall length along the top longitudinal rail element through all posts and gaps. Removal and disposal of all posts and connecting hardware associated with rail will not be measured for payment.

Basis of Payment. This work shall be paid for at the contract unit price per foot for HANDRAIL REMOVAL.

ITEM NO. 152 Z0007430 - TEMPORARY SIDEWALK

Description. This work shall consist of complete design, submittal of design drawings (working drawings), furnishing materials, equipment and labor to construct the temporary sidewalk and support system to the limits and requirements shown on the plans, the special provisions and standard specifications, and the accepted Contractor prepared working drawings. This work shall also include removal and disposal of the sidewalk support system when no longer required as determined by the Engineer.

General Requirements. The plan drawings include a schematic of the Temporary Sidewalk Support System and all components and details will be the responsibility of the Contractor. If the Contractor elects to incorporate other components of the work, adjustments to other work items or this item will become the responsibility of the Contractor. If the Contractor elects to utilize a scheme placing additional loads to the permanent elements, additional computation/verification of design stresses imposed on the permanent structural elements will be required and shall be performed at no additional cost to the City.

The temporary sidewalk and support system shall be designed to the loads shown on the plans, in addition to other applicable loads such as wind. The design shall conform to the 2014 AASHTO LRFD Bridge Design Specifications with 2015 interims.

The Contractor shall submit design computations and working drawings to the Engineer for review and acceptance. The calculations shall be prepared and sealed by an Illinois Licensed Structural Engineer. This acceptance will not relieve the Contractor of responsibility for the safety of the Temporary Sidewalk Support System.

The Contractor shall maintain the sidewalk and support system and shall repair any damage caused to the system at no additional cost, even if at no fault of the Contractor. The system shall remain in place until determined by the Engineer that it is no longer required.

Proposed material shall be submitted for approval by the Commissioner. No material application work shall be allowed without the approval of the Commissioner.

This item will also include snow removal and ice removal from the walkways and salting of the walkways. Snow and ice shall be removed immediately between the hours of 5:00 AM and 7:00 PM. Snow and ice that accumulates at other times shall be removed prior to 5:00 AM. De-icing salts shall be applied as required to keep the walkways/bridges ice-free. The cost of de-icing salts and snow removal equipment and labor is included in this item.

Method of Measurement. TEMPORARY SIDEWALK will be measured for payment per square feet, complete in place.

Basis of Payment. This work shall be paid for at the contract unit price per square foot for TEMPORARY SIDEWALK.

ITEM NO. 153 Z0012754 - STRUCTURAL REPAIR OF CONCRETE (DEPTH EQUAL TO OR LESS THAN 5 INCHES)

Description: Work under this item shall be performed per the Guide Bridge Special Provision "Structural Repair of Concrete".

ITEM NO. 154 Z0013797 – STABILIZED CONSTRUCTION ENTRANCE

Description: This work shall consist of furnishing, installation, maintenance and removal of stabilized pad of aggregate underlain with filter fabric as shown on the plans or directed by the Engineer.

Materials: Materials shall conform to the following:

Aggregate size. IDOT Coarse Aggregate Graduation: CA-1, CA-2 CA-3, or CA-4.

Filter Fabric shall consist of synthetic polymers composed of at least 85 percent by weight polypropylene, polyesters, polyamides, polyethylene, polyolefins, or polyvinylidene- chlorides. The geotextile shall be free of any chemical treatment or coating that significantly reduces its porosity. Fibers shall contain stabilizers and/or inhibitors to enhance resistance to ultraviolet lights.

Construction Requirements: The course aggregate shall be a thickness of 6 inches or more. The stone entrance should not be filled until the area has been inspected and approved by the Engineer.

The rock shall be dumped and spread into place in approximately horizontal layers not more than 3 feet in thickness. It shall be placed in a manner to produce a reasonable homogeneous stable fill that contains no segregated pockets or larger or small fragments or large unfilled space caused by bridging of larger fragments. No compaction will be required beyond that resulting from the placing and spreading operations.

The minimum width and length shall be 14 and 40 feet, respectively.

All surface water flowing or diverted toward the construction entrance shall be piped across the entrance. Any pipe used for this will be considered incidental to the STABILIZED CONSTRUCTION ENTRANCE. The stabilized construction entrance will have positive drainage away from the roadway.

The entrance shall remain in place and be maintained until the disturbed area is stabilized. Any sediment spilled onto public right-of-way must be removed immediately.

Method of Measurement and Basis of Payment The work shall be measured and paid for at the contract unit price per square yard for STABILIZED CONSTRUCTION ENTRANCE, which price shall be payment in full for all material, labor and any other items required to complete the work.

ITEM NO. 155 Z0013798 CONSTRUCTION LAYOUT

Description. Work under this item shall be performed according to Recurring Special Provision Check Sheet #10 for Construction Layout Stakes.

ITEM NO. 156 Z0030850 TEMPORARY INFORMATION SIGNING

Description. This work shall consist of furnishing, installing, maintaining, and relocating for various stages of construction and eventually removing temporary informational signs. Included in this item may be ground mount signs, skid mount signs, truss mount signs, bridge mount signs, and overlay sign panels which cover portions of existing signs.

Materials. Materials shall be according to the following Articles of Section 1000 - Materials:

Item	Article/Section
a.) Sign Base (Notes 1 & 2)	1090
b.) Sign Face (Note 3)	1091
c.) Sign Legends	1092
d.) Sign Supports	1093
e.) Overlay Panels (Note 4)	1090.02

Note 1. The Contractor may use 5/8 inch (16 mm) instead of 3/4 inch (19 mm) thick plywood.
Note 2. Type A sheeting can be used on the plywood base.
Note 3. All sign faces shall be Type A except all orange signs shall meet the requirements of Article 1106.01.
Note 4. The overlay panels shall be 0.08 inch (2 mm) thick.

GENERAL CONSTRUCTION REQUIRMENTS

Installation. The sign sizes and legend sizes shall be verified by the Contractor prior to fabrication. Signs which are placed along the roadway and/or within the construction zone shall be installed according to the requirements of Article 701.14 and Article 720.04. The signs shall be 7 ft. (2.1 m) above the near edge of the pavement and shall be a minimum of 2 ft. (600 mm) beyond the edge of the paved shoulder. A minimum of two (2) posts shall be used.

The attachment of temporary signs to existing sign structures or sign panels shall be approved by the Engineer. Any damage to the existing signs due to the Contractor's operations shall be repaired or signs replaced, as determined by the Engineer, at the Contractor's expense.

Signs which are placed on overhead bridge structures shall be fastened to the handrail with stainless steel bands. These signs shall rest on the concrete parapet where possible. The Contractor shall furnish mounting details for approval by the Engineer.

Method of Measurement. This work shall be measured for payment in square feet (square meters) edge to edge (horizontally and vertically).

All hardware, posts or skids, supports, bases for ground mounted signs, connections, which are required for mounting these signs will be included as part of this pay item.

Basis of Payment. This work shall be paid for at the contract unit price per square foot (square meter) for TEMPORARY INFORMATION SIGNING.

ITEM NO. 157 Z0046304 PIPE UNDERDRAINS FOR STRUCTURES 4”

Description. Work under this item shall be performed according to Guide Bridge Special Provision Pipe Underdrain for Structures.

ITEM NO. 158 ****** SUB-BASE GRANULAR MATERIAL, NON-LIMESTONE**

Description: Work under this item must be performed in accordance with Section 311 and Section 601 of the detailed specifications of the Standard Specifications for Road and Bridge Construction and subsequent special provisions. This work must consist of furnishing, placing, compacting non-limestone porous aggregate sub-base material on the prepared sub-grade to the thickness required per the plans, the installation of pipe underdrains, the connection of pipe underdrains to structures, the installation of pipe underdrain risers, and the installation of pipe underdrain cleanouts as detailed and shown in the plans.

Material: The aggregate material shall be crushed or uncrushed coarse aggregate. Limestone will not be permitted.

Quality: The coarse aggregate shall be A quality.

Gradation: The gradation for the sub-base layer shall be IDOT CA-7 or IDOT CA-11.

Preparation of Sub-base: The coarse aggregate sub-base shall be placed in 6-inch maximum lifts. Lightly compact each layer with equipment, keeping equipment movement over storage bed sub-grade to a minimum. Should sub-base material be disturbed due to construction equipment, the sub-base layer shall be lightly regraded before laying the surface layer. Aggregate shall be placed to grades as indicated on the plans. Following placement of sub-base aggregate, the geotechnical fabric shall be folded back along all bed edges to protect from sediment washout along bed edges. This edge strip shall remain in place until all bare soils contiguous to beds are stabilized and vegetated. In addition, take any other necessary steps to prevent sediment from washing into beds during site development. When the site is fully stabilized, temporary sediment control devices shall be removed.

Pipe Underdrain General Requirements: The pipe underdrain, pipe underdrain connections, risers, and cleanouts shall be installed at the locations shown and detailed in the plans. This work shall be performed in accordance with Section 601 and Article 1040.03 of the Standard Specifications and the Standard Construction Details, except as herein modified

Perforated Pipe shall be placed with the perforations down and the Pipe Sections shall be joined securely.

The Geotechnical Fabric Envelope and Coarse Aggregate used in the construction of the Pipe Underdrain shall not be paid for separately but considered incidental to this item.

The bedding aggregate shall be CA 5 or CA 7 except that limestone, crushed concrete, or any other lime bearing material will not be allowed. The Pipe Underdrain shall be Perforated Smooth Poly Vinyl Chloride Pipe (PVC), 4-inch.

The porous granular material shall be wrapped using a fabric envelope meeting the requirements of Section 1080 of the Standard Specifications.

CA 18 meeting the requirements of Article 1004.05 except that limestone, crushed concrete, or any other lime bearing material will not be allowed, shall be used in lieu of FA 1 or FA 2 for porous granular backfill. CA 18 shall be considered part of this item.

Pipe underdrains shall outlet into the drainage structures shown in the plans.

Pipe underdrain cleanouts shall be installed in each tree pit adjacent to permeable pavers as detailed in the plans. Pipe underdrain cleanouts shall be provided with concrete collars and pipe caps meeting the approval of the Commissioner.

Pipe underdrain risers shall be installed in the locations shown in the plans.

Pipe Underdrains, if called out on the plans, shall not be paid for separately, but shall be considered incidental to SUB-BASE GRANULAR MATERIAL, NON-LIMESTONE.

The connection of the pipe underdrains to drainage structures, if called out on the plans, shall not be paid for separately but shall be incidental to SUB-BASE GRANULAR MATERIAL, NON LIMESTONE.

Pipe underdrain cleanouts, if called out on the plans, shall not be paid for separately, but shall be considered incidental to SUB-BASE GRANULAR MATERIAL, NON-LIMESTONE.

Pipe underdrain risers, if called out on the plans, shall not be paid for separately but shall be incidental to SUB-BASE GRANULAR MATERIAL, NON LIMESTONE.

Pipe underdrain fittings, if called out on the plans, shall not be paid for separately, but shall be considered incidental to SUB- BASE GRANULAR MATERIAL, NON-LIMESTONE.

Method of Measurement: SUB-BASE GRANULAR MATERIAL, NON-LIMESTONE will be measured in place and the volume computed in cubic yards. The area for measurement will be the lesser of the dimensions shown on the plans or as measured in the field.

Basis of Payment: This work will be paid for at the contract unit price per cubic yard as shown in the Schedule of Unit Prices for SUB-BASE GRANULAR MATERIAL, NON-LIMESTONE, which price shall include furnishing, placing and compacting the material needed to prepare the subgrade. This work shall also include the excavation, disposal of unsuitable material, and the installation of all perforated PVC pipe underdrain, pipe underdrain connections, fabric envelope, fittings, risers, cleanouts, bedding aggregate, and porous granular backfill.

ITEM NO. 159 ******** PERMEABLE PAVERS

Description:
Contractor must provide all equipment and materials, and do all work necessary to construct the permeable paving as indicated on the Drawings and as specified.

General Requirements:
Drawings and general provisions of Contract, including General and Supplementary Conditions and all other Divisions of the Project Manual, apply to this Section.

Quality Assurance:
Except as modified herein, the work shall be in accordance with the applicable portions of the Standard Specifications.

Qualifications:
A. Contractor must provide evidence that his firm or other entity proposed for the unit paving work has specific experience meeting the following criteria:

1. Experience installing permeable pavers using aggregate setting beds.
2. Aggregate setting bed work shall not be sublet.

B. If requested the paving firm shall submit list of comparable projects setting forth description, square footage, location and knowledgeable references with addresses and phone numbers.

Samples:
Contractor must submit to the Commissioner a minimum of 25 square feet of permeable pavers for approval. Submittal shall indicate the full range of permeable pavers in the specified color.

Access to Businesses and Homes:
During the installation of the permeable paver units and base Contractor must keep driveways and entrances serving the businesses and homes clear and available to the Owner and the business' employees at all times. Customer access shall be maintained during normal business hours. Contractor is responsible for providing temporary structures such as wooden bridges, ramps, or walkways as required to provide the public safe, secure, and recognizable access ways to businesses during construction.

Permeable Pavers:
1. PERMEABLE PAVERS basis of design shall be as manufactured by a Qualified Producer as listed on the IDOT Bureau of Materials "Qualified Producer List of Certified Precast Concrete Produces" in effect on the date of invitation for bids.

1. PERMEABLE PAVERS shall be:
    a. Eco-Priora 5x10, 5x5, 10x10, Pattern "X", Color: Coffee Creek with Brushed Finish".
    b. Permeable pavers shall be installed as indicated on drawings
2. All permeable pavers shall meet the following requirements:
    1. C 33 Specification for Concrete Aggregates.

2. C 136 Method for Sieve Analysis for Fine and Coarse Aggregate.
3. C 140 Sampling and Testing Concrete Masonry Units.
4. C 144 Standard Specifications for Aggregate for Masonry Mortar.
5. C 936 Specifications for Solid Interlocking Concrete Paving Units.
6. C 979 Specification for Pigments for Integrally Colored Concrete.
7. D 698 Test Methods for Moisture Density Relations of Soil and Soil Aggregate Mixtures Using a 5.5 lb (24.4 N) Rammer and 12 in. (305 mm) drop.
8. D 1557 Test Methods for Moisture Density Relations of Soil and Soil Aggregate Mixtures Using a 10-lb (44.5 N) Rammer and 18 in. (457 mm) drop.
9. D 2940 Graded Aggregate Material for Bases or Subbases for Highways or Airports.
10. C 29 Bulk Density and Voids in Aggregate Materials.

3. Pavers shall meet the minimum material and physical properties set forth in ASTM C 936, Standard Specification for Interlocking Concrete Paving Units.

1. Average compressive strength 8000 psi (55MPa) with no individual unit under 7,200 psi (50 MPa).
2. Average absorption of 5% with no unit greater than 7% when tested according to ASTM C 140.
3. Resistance to 50 freeze-thaw cycles, when tested according to ASTM C 67, with no breakage greater than 1.0% loss in dry weight of any individual unit. This test method shall be conducted not more than 12 months prior to delivery of units.
4. Efflorescence shall not be a cause for rejection.
5. Pigment in concrete pavers shall conform to ASTM C 979. ACI Report No. 212.3R provides guidance on the use of pigments.
6. Maximum allows breakage of product is 5%.

Granular Base:

1. The granular base material shall be crushed stone conforming to ASTM C 33 No 57, as presented in Table 1; IDOT CA-7, ¾ inch washed angular material without fines.

TABLE 1
GRANULAR BASE GRADING REQUIREMENTS

SIEVE SIZE	PERCENTAGE PASSING
1 ½ in (37.5 mm)	100
1 in (25 mm)	95 to 100
½ in (12.5 mm)	25 to 60
No. 4 (4.75 mm)	0 to 10
No. 8 (2.36 mm)	0 to 5

Bedding and Void Opening Aggregates:

1. The granular bedding material shall be graded in accordance with the requirements of ASTM D 33 No 8; IDOT CA-16. The typical bedding thickness is between 1 ½ & 2 inches. The joint opening aggregate material shall be 1/8 to 3/16 inch granite chips.

2. Note: Aggregate materials used in the construction of permeable pavements shall be clean, have zero plasticity and contain No. 200 sieve size materials. The aggregate materials must serve as the structural load bearing platform of the pavement as well as a temporary receptor for the infiltrated water that is collected through the openings in the pavement's surface.

3. The bedding and void opening aggregate shall conform to the grading requirements of ASTM C 33 No 8 as shown in Table 2.

TABLE 2
BEDDING AND VOID OPENING AGREGATE GRADING REQUIREMENTS

SIEVE SIZE	PERCENTAGE PASSING
½ in (12.5 mm)	100
3/8 in (9.5 mm)	85 to 100
No. 4 (4.75 mm)	10 to 30
No. 8 (2.36 mm)	0 to 10
No. 16 (1.18 mm)	0 to 5

General:
1. All permeable pavers shall be installed per the respective manufacturer's recommendations.

2. No permeable paver setting work shall be performed when the underlayment has free moisture, ice, or snow, or when the underlayment is frozen.

Permeable Paver Cutting:
A. Gaps at the edges of the paved area shall be filled with cut pavers.

1. Units cut no smaller than one-third of a whole paver are recommended along edges subject to vehicular traffic.

B. Cut permeable pavers shall be placed in areas shown on the details in the plans.

C. Pavers to be placed along the edge shall be cut with a masonry saw.

1. The use of infill concrete or discontinuities in patterns will not be permitted except along the outer pavement boundaries, adjacent to drains and manholes.

2. Upon completion of cutting, the area must be swept clean of all debris to facilitate inspection and to ensure pavers are not damaged during compaction.

Examination:

1. Verify that subgrade preparation, compacted density and elevations conform to the specifications.

2. Note: For installation on a compacted aggregate base and soil subgrade, the designer should be aware that the top surface of the pavers may be 1/8 to 1/4 in. (3 to 6 mm) above the final elevation after compaction. This difference in initial and final elevation is to compensate for possible minor settling.

3. Note: Compaction of the soil subgrade should be based on the recommendations of the Designing Engineer. The Architect/Engineer should inspect subgrade preparations, elevations and conduct density tests for conformance to specifications.

4. Verify that geotextiles, if applicable, have been placed according to specifications and drawings.

5. Verify that aggregate base materials, thickness, compaction, surface tolerances and elevations conform to the specifications.

6. Note: The aggregate base should be spread and compacted in uniform layers not exceeding 6 in. (150 mm) thickness. Recommended base surface tolerance should be plus or minus 3/8 in. (10 mm) over a 10 ft. (3 m) straight edge. The Architect/Engineer should inspect geotextile materials and placement (if applicable), base preparation, surface tolerances and elevations for conformance to specifications.

7. Note: Mechanical tampers (jumping jacks) are recommended for compaction of soil subgrade and aggregate base around lamp standards, utility structures, building edges, curbs, tree wells and other protrusions. Areas not accessible to roller compaction equipment should be compacted to the specified density with mechanical tampers. CAUTION - Care shall be taken around the perimeters of excavations, buildings, curbs, etc. These areas are especially prone to consolidation and settlement. Wedges of backfill should not be placed in these areas. If possible, backfilling and compacting in these areas particularly should proceed in shallow lifts, parallel to the finished surface.

8. Verify the proper installation of the concrete curbing, in terms of location, elevation, and adherence to the specifications.

9. Verify that the base is dry, uniform, even and ready to support bedding course aggregates, pavers and imposed loads.

10. Beginning of bedding course aggregates and paver installation shall signify acceptance of the base and concrete curb edge restraints.

Site Preparation:
1. The site must be stripped of all topsoil and other objectionable materials to the grades specified.

2. All sub drains of underground services within the pavement area must be completed in conjunction with subgrade preparation and before the commencement of subbase construction.

3. After trimming to the grades specified, the pavement is to be proof rolled to a percentage of Standard Proctor Maximum Dry Density as specified by the Designing Engineering with soft spots or localized pockets of objectionable material excavated and properly replaced with approved granular material.

4. The subgrade shall be trimmed to within 0 to 3/8 in. (0 to 10 mm) of the specified grades. The surface of the prepared subgrade shall not deviate by more than 3/8 in. (10 mm) from the bottom edge 39 in. (1 m) straight edge laid in any direction.

5. The Contractor shall insure that the prepared subgrade is protected from damage from inundation by surface water. No traffic shall be allowed to cross the prepared subgrade. Repair of any damage resulting shall be the responsibility of the Contractor and shall be repaired.

6. Under no circumstances shall further pavement construction proceed until the subgrade has been inspected by the Owner or the Consultant.

Granular Subbase and Base Installation

1. After proper construction of the concrete curb edge restraints for the interlocking pavement as per Section 3.4, and upon approval by the Consultant, aggregate subbase (as specified in design) and base shall be placed in uniform lifts not exceeding 6 in (150 mm) loose thickness and roller compacted according to the AASHTO guidelines for installing open graded aggregates. Because the subbase and base are open graded aggregated materials, a method specification is appropriate for guidance in all aggregate compactive force.

2. Subbase thickness shall be: 8 inches or as indicated in drawings.

3. Base thickness shall be: 6 inches or as indicated in drawings.

4. The granular base shall be trimmed to within to within 0 to 3/8 in. (0 to 10 mm) of the specified grade. The surface of the prepared base shall not deviate more than: 3/8 in. (10 mm) from the bottom edge of a 10 ft. (3 m) straight edge laid in any direction.

5. Before commencing the placing of bedding aggregate course and the placement of the Unilock® permeable concrete pavers, the base shall be inspected by the Owner or the Consultant.

Paver Installation

1. Spread the bedding aggregate evenly over the base course and screed to a nominal 1½ in. to 2 in.(28 mm to 51 mm) thickness. The bedding aggregate should not be disturbed. Place sufficient bedding aggregate to stay ahead of the laid pavers. Do not use the bedding aggregate to fill depressions in the base surface.

2. Initiation of paver placement shall be deemed to represent acceptance of the pavers.

3. Pavers shall be free of foreign material before installation.

4. Pavers shall be inspected for color distribution and all chipped, damaged or discolored pavers shall be replaced. Maximum allow breakage as per 2.1.

5. The pavers shall be laid in pattern(s) as shown on the drawings.

6. Joints between the pavers shall be maintained according to the spacer bars.

7. Gaps at the edges of the paved area shall be filled with cut pavers.

8. Units cut no smaller than one-third of a whole paver are recommended along edges subject to vehicular traffic.

9. Pavers to be placed along the edge shall be cut with a masonry saw.

10. The use of infill concrete or discontinuities in patterns will not be permitted except along the outer pavement boundaries, adjacent to drains and manholes.

11. Upon completion of cutting, the area must be swept clean of all debris to facilitate inspection and to ensure pavers are not damaged during compaction.

12. Low amplitude, high frequency plate compactor shall be used to compact the pavers. Use Table 3 below to select size of compaction equipment:

TABLE 3
PAVER THICKNESS AND REQUIRED MINIMUM COMPACTION FORCE

Paver Thickness	Compaction Force
3 1/8 in. (80 mm)	5000 lbs [22 kN]

13. The pavers shall be compacted and the bedding aggregates shall be swept into all joints and void openings until they are full. This will require at least two or passes with the compactor. Do not compact within 3 ft. (1 m) of the unrestrained edges of the paving units.

14. Use of a urethane plate compactor pad shall be used to minimize any scuffing of the paving stone surface.
15. All work to within 3 ft. (1 m) of the laying face must be left fully compacted at the completion of each day.

16. Excess surface bedding and void opening aggregates shall be swept off when the job is complete.

17. The final surface elevations shall not deviate, as an example, more than 3/8 in. (10 mm) under a 10 ft. (3 m) long straight edge. Acceptable surface elevation deviations shall be specified by the Designing Engineer.

18. The surface elevation of pavers shall be 1/8 to 1/4 in. (3 to 6 mm) above adjacent drainage inlets, concrete collars or channels.

Cleaning of Paved Surface:
After completion of the permeable pavers, paver installation areas shall be thoroughly swept clean and surface shall be left unsoiled. Where required by the City, surface shall be cleaned with water or an approved cleaner.

Method of Measurement: PERMEABLE PAVERS will be measured for payment in place and the area computed in square feet.

Basis of Payment: PERMEABLE PAVERS will be paid for at Contract Unit Price per square foot for which such price shall include all labor, materials and equipment necessary to perform the work as herein specified. The Bedding Material (Open Graded, Crushed Angular, IDOT CA-16) shall be included in Contract Unit Price for PERMEABLE PAVERS.

ITEM NO. 160 ****** PERMEABLE PAVER REMOVAL**

Description: This work consists of removing and disposing of permeable paver as shown on the plans, as directed by the Commissioner.

General: At locations where PCC sidewalk is proposed, permeable paver as well as bedding material shall be removed to 5" below proposed grade.

Method of Measurement: This work shall be measured for payment in square foot.

Basis of Payment: This work will be paid for at the contract unit price per square foot for PERMEABLE PAVER REMOVAL.

ITEM NO. 161 ****** GRADING AND SHAPING SHARED USE PATH**

This work consists of grading and shaping the shared use path in accordance with Section 301 of the Special provisions except that Article 301.12 is modified as follows:

Basis of Payment: Preparation of the shared use path in accordance with Section 301 for aggregate base and paving will be paid for at the contract unit price per unit for GRADING AND SHAPING SHARED USE PATH.

ITEM NO. 162 ****** MAINTENANCE OF ACCESS TO ABUTTING PROPERTIES**

Description. This work consists of providing and maintaining, in an acceptable manner, temporary access from the street being improved to abutting property by furnishing and placing crushed stone with a CA-6 gradation meeting the requirements of Article 1004.04 of the Standard Specifications.

General. The Contractor must at all times conduct the work in such a manner as to ensure the least obstruction to vehicular and pedestrian traffic. The convenience of the general public and of residents along the involved streets must be provided for in an adequate and satisfactory manner as directed by the Commissioner.

The Contractor must provide the temporary access by placing crushed stone fill where possible, from the street under improvement to abutting side streets, alleys, driveways, parking lots, buildings, houses, crosswalks, C.T.A. bus stops disturbed by construction, including access from sidewalks to the bus stops and to any other property where egress and ingress is required. Also, to fill sewer trenches from the sub-base elevation to existing surface elevation.

When permanent access has been re-established, the materials used for temporary access must be removed by the Contractor and will become his property for disposal thereof. However, he may use the same material in other locations to provide temporary access if approved by and as directed by the Commissioner.

Method of Measurement. The work will be measured in lump sum basis. 50% of the payment will be made at the first pay estimate. 50% will be paid at the final pay estimate.

Basis of Payment. This work will be paid for at the contract unit price lump sum for MAINTENANCE OF ACCESS TO ABUTTING PROPERTY, which will be payment in full for all labor, materials, and equipment including but not limited to the furnishing, transporting, placing, maintaining, removing, and disposing of all materials used for providing temporary access as herein specified.

ITEM NO. 163 ****** CAST IRON TREE GRATES, GRATE FRAMES, AND THICKENED SLAB, 5' x 10'**

Effective: November 22, 2016

Description: Work under these items consist of furnishing and installing the cast iron tree grates, grate frame, support beams, P.C.C. Thickened slab, anchors and volcanic rock mulch, as shown on the plans and in conformance with the IDOT Standard Specifications for Road and Bridge Construction except as herein modified.

Materials. Materials shall be according to the following Articles of Division 1000 – Materials of the Standard Specifications:

	Article/Section
Epoxy coated reinforcement bar	508
Gray Cast Iron ASTM A48 or A48-75m class 35 or 35B	1006.14
Portland Cement Concrete Class SI	1020

Tree grates can be supplied by the following suggested manufacturers:

Neenah Foundry, Neenah WI; Urban Accessories, Woodinville, WA,

Ironsmith, Palm Desert, CA; Fairweather/Olympic Foundry, Seattle, WA.

Frame must be 1 1/2" H x 1 3/16" W gray cast iron frame, or shall coordinate with grate dimensions, surrounding the entire perimeter of the tree pit. Two (2) steel support beams with welded pads and anchor holes to receive #4 rebar shall be included with the frames. Frame shall be manufactured with lugs at 12-24" apart to receive #4 rebar for securing within the thickened slab.

Tree grates shall be 1.5" thick and shall consist of two center pieces and two extension pieces of equal width. The center pieces shall include a **12" radius opening for the tree**. Each piece shall be engraved with "City of Chicago" in 5/8" letters on both the top and bottom sides of the grate piece. Grate pattern and assemblages must comply with ADA Guidelines for equal access.

Material Under Grate

Mulch shall be Volcanic Rock, Large Rock, Black, 2"-4" in depth in order to reach the bottom of the tree grate. Volcanic Rock shall be free of foreign materials. The cost of furnishing and installing material under grate shall be incidental to these items. See Tree Installation specifications for back fill material.

General Requirements Work shall consist of furnishing and installing the cast iron tree grates, grate frame and support beam, P.C.C. thickened slab, and volcanic rock mulch. Surface preparation and coating shall be included in the cost as well as all necessary excavation, forms, reinforcement, anchor rods, rebar, concrete, and any other work needed to complete the construction of the tree grate supports.

Submittals

Shop drawings of all items related to the manufacture and installation of the tree grate and frame must be submitted and approved by CDOT before fabrication.

Construction Requirements

1. Surface Preparation:

The top surface shall be cleaned in accordance with Article 506.03 of the SSRBC and Steel Structures Painting Council SSPC-SP2 or 3 (hand tool or power cleaning method) and must be free of all loose rust and loose mill scale.

2. Sealer:

Before installation, contractor shall coat all surfaces (top, bottom, and edges) of the grates two applications of linseed oil to alleviate the initial rusty appearance of the untreated metal.

3. Opening to Receive Grates

Sub-base granular material Type B shall be placed and compacted to 95% proctor prior to installation of frame. Frame with grate attached will then be placed on top of compacted sub-base surface. Wood forms shall be placed inside frame to prevent concrete seepage into pit area, expansion joints place on the outside of the frame and rebar set in place. Concrete thickened slab shall then be poured around frame and allowed to set until firm. The installation of Subbase Granular Material Type B will not be paid for separately but will be incidental to the cost of these items.

If installing grate at back of curb, contractor shall install a galvanized steel C-channel at the back of curb to accept the tree grate frame. Inform manufacturer to remove lugs from, the curb side of the frame. C-channel shall utilize an anchoring system with a minimum shear capacity of 12 kips live wheel load. Detailed product information must be approved prior to installation. The C-channel shall be incidental to the cost of these items.

4. Tree Planting

See Tree Installation specifications.

5. Support

Pads shall be welded to support beams to support grate. Support beams shall be bolted to the bottom of the frame where the center pieces and extension pieces meet and shall be anchored into the surrounding concrete. Supports shall be used to keep grate level with grade and prevent sagging and shall be installed according to manufacturer's instructions.

6. Join Grate Parts

Bring tree grate quarters together around tree at level to allow easy access to underside. Join sections at preformed holes using temper-resistant bolt packages provided by manufacturer. Lower grate into place. Grate sections shall be joined to the frame at preformed holes with tamper resistant bolt assembly packages as provided by the manufacturer.

Manufacturer's Warranty

Manufacturer's written warranty shall be delivered to the Commissioner prior to installation of grates. Installer assumes responsibility for proper installation.

Method of Measurement CAST IRON TREE GRATES, GRATE FRAMES, AND THICKENED SLAB, 5' X 10' shall be measured for payment per each tree pit constructed, complete in place.

Basis of Payment The work under this item shall be paid for at the contract unit price each for CAST IRON TREE GRATES, GRATE FRAMES, AND THICKENED SLAB, 5 X 10' which price shall

include cast iron tree grates, grate frame, support beams, P.C.C. Thickened slab, anchors and volcanic rock mulch, and all labor, material, and equipment costs necessary to complete the work as specified.

ITEM NO. 164 ******** REMOVAL OF EXISTING WOOD CHIP TRAIL

Description. This item shall include all labor, materials and equipment necessary to remove wood chip trail designated for removal.

Preparation and Execution:

Remove woodchips, plastic edging and geotechnical fabric base and dispose of properly off-site.
Backfill with topsoil and seed for erosion control.

Method of Measurement. REMOVAL OF WOOD CHIP TRAIL, will be measured per square foot. All equipment, materials and labor required to remove the trail shall be considered incidental to this item.

Basis of Payment. REMOVAL OF WOOD CHIP TRAIL, will be paid for at the contract price per square foot, which price shall include removing all materials, including the geotechnical fabric, equipment and labor necessary to complete the work.

ITEM NO. 165 ******** MULCH TRAIL

Description. This item shall include all labor, materials and equipment necessary to furnish and install the wood chip trail.

Submittals.

Mulch – sample, 1/2 cubic foot
Pressure treated landscape timber – sample, 8' length
Staking – sample, 3 stakes
Request for Inspection Material Sheet

Products:

Mulch

The mulch shall be premium shredded hardwood bark mulch, double ground, with no leaves, twigs, or branches. The mulch pieces shall not exceed 3", and the mulch shall not contain any wood or be colored. A sample and request for material inspection form must be supplied to the Commissioner for approval prior to performing any work.

Timbers

The timbers shall be pressure treated landscape timbers, 3.5"x3.5"x8'. A sample and request for material inspection form must be supplied to the Commissioner for approval prior to performing any work.

Stakes

The stakes shall be 3/8" dia. x 18" galvanized stakes or #3 rebar, 18" in length. A sample and request for material inspection form must be supplied to the Commissioner for approval prior to performing any work.

Preparation and Execution:

Confirm the mulch trail layout with the Commissioner prior to beginning the work.

Excavate out trail to a 1" depth by 2'-7" width and set bottom timbers. Stagger top timbers and install three stakes per timber length. The stakes should be pounded down just below the top of the timber.

Backfill with shredded bark mulch to a 6" depth.
Contractor shall make inspections to ensure that level of mulch has been maintained.

Method of Measurement. MULCH TRAIL, will be measured per linear foot. All materials required to provide and install shredded hardwood bark mulch trail shall be considered incidental to this item.

Basis of Payment. MULCH TRAIL, will be paid for at the contract price per linear foot, which price shall include furnishing and installing the hardwood bark mulch as specified, and all materials, equipment and labor necessary to complete the work.

ITEM NO. 166 ****** REMOVE EXISTING SIGN PANEL AND SALVAGE**
ITEM NO. 167 ****** REMOVE EXISTING SIGN PANEL AND POLE ASSEMBLY, FROM SIDEWALK, AND SALVAGE**

Description: Work under these items consists of removing existing Sign Panels from light poles, traffic signal posts, traffic signal mast arms, and sign assemblies. Sign Assemblies consist of poles in ground, base mounted poles on the sidewalk, embedded poles in concrete, the mounted sign panels, sleeves, wedges, bases and other associated hardware. The contractor will dispose of all salvaged Sign Panels and Sign Assemblies by delivering to the Bureau of Signs and Markings, 3458 South Lawndale Avenue, Chicago, Illinois 60623. The Contractor must contact the Bureau at (312) 747-2210 at least 24 hours in advance to arrange delivery of salvaged Sign Panels, Sign Assemblies. The Contractor will obtain a receipt for all the delivered Sign Panels and Sign Panel And Pole Assemblies from the Superintendent of Signs Division and submit the same to the Resident Engineer on a regular basis. All removal work shall be performed in accordance with Section 724 of Standard Specifications.

In the case of removal of a pole installed in a parkway that is not going to be replaced with a new pole at the same location, the Contractor will fill and compact the hole with an approved fill material such as FA-2 at no additional cost to the City.

In the case of removal of base mounted poles installed in existing sidewalk that won't be replaced, the extruding bolts will be sawed flush to the sidewalk surface immediately. The cost of sawing the bolts is incidental to the cost of REMOVE EXISTING SIGN PANEL AND POLE ASSEMBLY, FROM SIDEWALK, AND SALVAGE.

In the case of removal of poles embedded in sidewalk, the pole shall be sawed flush to the sidewalk surface and grouted with approved materials to close the open pipe. The cost of installing grout is incidental to the cost of the item REMOVE EXISTING SIGN PANEL AND POLE ASSEMBLY, FROM SIDEWALK, AND SALVAGE.

Method of Measurement: REMOVE EXISTING SIGN PANEL AND SALVAGE, and REMOVE EXISTING SIGN PANEL AND POLE ASSEMBLY, FROM SIDEWALK, AND SALVAGE will be measured for payment on the basis of each item removed and salvaged.

Basis of Payment: REMOVE EXISTING SIGN PANEL AND SALVAGE, and REMOVE EXISTING SIGN PANEL AND POLE ASSEMBLY, FROM SIDEWALK, AND SALVAGE will be paid for at the contract unit price per each

ITEM NO. 168 ****** - FURNISH SIGN PANEL, TYPE 1, REFLECTIVE, TYPE A, SINGLE-SIDED**

ITEM NO. 169 ****** - FURNISH SIGN PANEL, TYPE 1, REFLECTIVE, TYPE A, DOUBLE-SIDED**

Description: Work consists of furnishing and/or fabricating reflectorized sign panels complete with sign faces, legend, and supplemental panels.

Standard traffic signs designated by letters and numbers must be according to the Manual on Uniform Traffic Control Devices. Non-standard signs must be according to the CDOT Field Manual for Sign Installation and Detailed Drawings.

Submittals:

A. Shop Drawings: Fabrication shop drawings showing full size sign layout, color, message (including "City of Chicago" logo and date of sign fabrication), graphics and proposed materials for each sign assembly, including poles, bases and hardware, must be submitted for approval prior to start of fabrication. Similar sign types that have the same sizes, colors, symbols and text layout must be submitted using one full size sign layout. Note: The message "City of Chicago XX", where XX represents the last two digits of the calendar year of sign manufacture, must be screened on all signs furnished under this contract. For stock items, submit manufacture's catalog sheets for approval before shipping the order.

B. Materials:

1. Aluminum: Mill Certifications, Samples

2. Powder Coating: Test Data; Sample; Manufacturer's Certification that material complies with the required specifications.

3. Sign Face Material: Test Data; Samples; Manufacturer's Certification that material complies with the required specifications. Test Data must be gathered by an independent agency, such as AASHTO's National Transportation Product Evaluation Program (NTPEP). Test data must cover retroreflective sheeting and process inks and/or overlay films manufactured by the sheeting manufacturer in standard traffic colors.

C. Samples: Submit one sample for each sign type.

D. Material Acceptance: The Contractor must provide a Manufacturer's written certification that the material complies with these specifications.

E. Maintenance Instructions: Submit manufacturer's printed instructions for maintenance of each product, coating and film, including precautions for use of cleaning materials and solvents for paint removal which could damage specified materials.

Method of Measurement: The Sign Panels will be measured for payment in square feet of furnished and delivered sign panel. The area used for measurement will be the area of the smallest rectangle that will circumscribe each individual sign panel measured from edge to edge (horizontally and vertically). Double sided signs will be measured by the overall dimension of the complete panel, and not per face. Mounting hardware and appurtenances are included in the work and will not be measured separately for payment.

Basis of Payment: This work will be paid for at the Contract Unit Price per square foot of FURNISH SIGN PANEL, TYPE 1, REFLECTIVE, TYPE A, SINGLE SIDED and FURNISH SIGN PANEL, TYPE 1, REFLECTIVE, TYPE A, DOUBLE SIDED for a fabricated, furnished and delivered sign.

ITEM NO. 170 ****** - FURNISH AND INSTALL PROJECT SIGN, TYPE A**
ITEM NO. 171 ****** - FURNISH AND INSTALL, PROJECT SIGN B**
ITEM NO. 172 ****** - FURNISH AND INSTALL PROJECT SIGN, BANNER**

Description. Work under this item shall consist of furnishing and installing signs at the project site. Work under this item shall be according to Section 720 of the IDOT Standard Specifications for Road and Bridge Construction, except as herein modified.

General Requirements. The sign size, composition and wording for the "Building A New Chicago" (BANC) signs shall be as shown in the following image and as specified by the Commissioner.

A minimum of one sign (either Type A or B) at each end of the construction zone shall be provided.

SITE SIGN SPECIFICATIONS

Size:	Sign A: Sign B:	4' x 8' x 1-7/8" 4' x 4' x ¾"
Materials:	Face:	Sign A – ¼" tempered Masonite Sign B – ¾" or greater shop sanded (exterior) plywood (one side only)
Framing:	Sign A: Sign B:	2" x 4" nominal on four sides and center cross bracing 2" x 4" center cross bracing only
Supports:	4" x 4" 12' nominal post	
Assembly:	Sign A: Sign B:	2" x 4" frame to fit 4' x 8' board with 2" x 4" cross braces To be mounted directly to the 4" x 4" post, with cross bracing
Mounting:	Signs A and B are to be mounted to the 4" x 4" post with 3/8" minimum bolt and nut, four on each side of the sign. Each bolt is to have two washers, one between the sign and the head of the bolt and the other between the post and the nut.	
Erection:	4" x 4" posts are to be set three to four feet deep into concrete 12" in diameter.	
Colors:	Background – White Striping – Black or Blue (As Noted) Lettering – Red (stars), White or Blue	

Rendering Sign Panels: Provide a 6' x 11' (1:1.7 ratio) sign panel depicting a rendering of the project improvements on one side. The sign material shall be ¼" tempered Masonite. The sign panels

must meet the specifications for the BANC signs, including framing, supports, assembly, mounting, and erection. The images of the rendering(s) to be used will be provided by the Commissioner.

BANC Banners: Provide 3’ x 33’ banners depicting the BANC imagery. The sign material shall be a flexible windscreen type material.

The signs shall be mounted as directed by the Commissioner. The bottom of the sign shall be seven (7) feet above the sidewalk.

The signs shall be erected prior to the beginning of construction and shall be removed within forty-eight (48) hours of notice by the Commissioner.

Method of Measurement. Work under this item will be measured for payment per each sign.

Basis of Payment. Work under this item will be paid at the contract unit price per each for FURNISH AND INSTALL PROJECT SIGN, TYPE A, FURNISH AND INSTALL PROJECT SIGN, TYPE B, or FURNISH AND INSTALL PROJECT SIGN, BANNER.

ITEM NO. 173 ****** - FURNISH AND INSTALL POLE, DRILL METHOD**

Description: This work consists of furnishing sign poles of various lengths and installation by the drill method as shown on the Contract Drawings. The poles shall be 10 feet and 6 inches in length. The cost of wedges, sleeves, pole bases and all other required hardware to install poles is incidental to the cost of items.

Sign Poles:

Materials: The material for the poles furnished must be hollow steel tubes, 2 - 3/8 inches outside diameter, conforming to ASTM A500 Grade B and coated for resistance to corrosion and outdoor weathering. Nominal wall thickness of pole must be 0.08". The sign pole must be formed to the size and type specified in the Contract Drawings. Holes must be drilled prior to coating to prevent indentations and dimples in the poles.

Finish: The poles must be galvanized, straight and have a smooth, black, uniform powder coating finish as specified below. The interior of the sign poles must be coated with a minimum of an 81% zinc rich primer. The exterior of the poles must be galvanized with material conforming to AASHTO M 120 with a minimum weight of 1.00 ounces per square foot. The weight of the exterior galvanizing may be reduced to 0.65 ounces per square foot of High Grade material conforming to AASHTO M120 if applied with a chromate conversion coating and a clear high performance organic polymer coating. Powder coating of the poles and extensions must meet the following requirements:

Color:	Vulcan Black Polyester
Product No.:	PFB-401-S6
Cure:	400F-18 minutes PMT
Resin type:	Polyester
Gloss:	Medium

Pretreatment Process:

Cleaning: All parts must be cleaned utilizing spray washers and an alkaline cleaner to remove any remaining grease, dirt, or other contaminants.

Rinsing: All parts must be spray rinsed in a continuously overflowing rinse stage to remove any remaining cleaning solution.

Phosphating: All parts must be spray phosphated in a heated phosphate solution to provide a transition coating between metal and powder.

Rinse: All parts must be spray rinsed in a continuously overflowing rinse stage to remove any remaining phosphate / sealant solution.

Powder Coating Process:

Drying: All parts must be preheated to totally eliminate moisture and prevent off gassing of casting.

Powder Coating: A premium TGIC polyester powder must be Electrostatically applied to provide a uniform coating to a thickness of 1-3 mils (1 mil minimum). To achieve proper mil thickness, the powder must be applied with one application. The vendor must be responsible for ensuring proper adhesion to the metal surface.

Curing: All parts must be heated to the exact time and temperature requirements, recommended by the powder coat material manufacturer, in precisely controlled gas ovens.

Sleeve and Locking Wedge:
Pole Sleeve (pipe socket): Material must be hollow steel tubes conforming to ASTM A500

Grade B or ASTM A501, and galvanized according to AASHTO M111, nominal wall thickness of .109", 2-5/8 inch inside diameter that allows for a minimum of 13-1/4 " of sign pole to nest inside the sleeve. The overall length must be 27".

Locking Wedge: Material shall be 11 gauge steel tube conforming to ASTM A500 Grade B or ASTM A501 and galvanized according to AASHTO M111. The locking wedge shall be contoured to fit between the steel pole and the 27-inch sleeve.

Sign Pole Base:
The sign pole base furnished under this contract includes a carriage bolt, tamper-resistant nuts, and anchor bolts with nuts. The finished casting must be free from burrs, cracks, voids, or other defects.

Support Base: Twelve-inch diameter, aluminum -zinc alloy casting per ASTM A197. The casting must have the words "City of Chicago" cast in relief.

Bolt washers and nut: Stainless steel as specified in Article 1006.31(a) of the Standard Specifications. Include a 1" x 4-1/2" carriage bolt with two 1" flat washers and a 1" x 13 full height hex nylon locknut.

Anchor Bolt: Galvanized steel expansion anchors conforming to Article 1006.09 of the Standard Specifications. Furnish three per each sign base provided.

Finish: Powder coat to minimum 1 mil thickness with satin black polyester finish.

Submittals:
Shop Drawings: Fabrication shop drawings showing the full size layout, color, and proposed materials for poles, bases, and hardware must be submitted for approval prior to start of fabrication.

Poles: Mill certification, samples of each size of finished pole and extension. Locking wedge and sleeve: Samples of each item.

Cast Aluminum Base: Mill Certifications.

Powder Coating: Test Data; Sample; Manufacturer's Certification that material complies with the required specifications.

Galvanizing: Manufacturer's Certification for compliance with these specifications. Stainless steel bolts and nuts, anchor bolts: sample, product data sheet.

Material Acceptance: The Contractor must provide a Manufacturer's written certification that the material complies with these specifications.

Installation: All installation shall be performed in accordance with Article 720.04 of the Standard Specifications or as directed by the Commissioner.

Drill Method: The base will be secured to the concrete surface by steel expansion anchors and must be leveled by using stainless steel washers as shims at the anchor bolt locations and under the base castings. The sign pole will be installed into the cast iron base and locked in place with a carriage bolt with two flat washers and a nylon lock nut. The holes at the top of the sign pole must be aligned such that the sign to be installed will properly face the flow of traffic.

Sign poles will be installed 18" from back of curb unless otherwise specified. Poles for transportation stops, e.g. bus, taxi, tour bus, or tour boat stops, must be installed 24" from the back of the curb unless otherwise noted.

Warranty: Warranty must be as referenced in Book 1. A manufacturer's warranty should be valid for 5 years. The warranty period will begin on the date of Final Punch List Completion and Acceptance of the work.

Method of Measurement: FURNISH AND INSTALL POLE, DRILL METHOD will be measured on the basis of each pole furnished and installed.

Basis of Payment: FURNISH AND INSTALL POLE, DRILL METHOD will be paid for at the Contract Unit Price per each, which prices shall include the cost of poles, all sleeves, locking wedges, bases and all other required hardware to complete the installation of poles.

ITEM NO. 174 ****** - INSTALL SIGN PANEL TY. 1, CENTER MOUNT ON SIGN POLE**

ITEM NO. 175 ****** - INSTALL SIGN PANEL TY. 1, FLAG MOUNT ON SIGN POLE**

Description: Work consists of re-installing previously removed or installing newly furnished or fabricated sign panels on previously erected sign support(s), sign structures, traffic signal poles, traffic signal mast arms, light poles, columns, piers, or bridges as shown on the Contract Drawings.

Work must be performed in accordance with the requirements of Section 720 of the Standard

Specifications and the latest version of the City of Chicago Department of Transportation (CDOT) Field Manual for Sign Installation.

Method of Measurement: The Sign Panels will be measured for payment in square feet of furnished and delivered sign panel. The area used for measurement will be the area of the smallest rectangle that will circumscribe each individual sign panel measured from edge to edge (horizontally and vertically). Double sided signs will be measured by the overall dimension of the complete panel, and not per face. Work will include all labor and materials necessary to install the sign. Mounting hardware and appurtenances are included in the work and will not be measured separately for payment.

Basis of Payment: This work will be paid for at the Contract Unit Price for INSTALL SIGN PANEL TY. 1, CENTER MOUNT ON SIGN POLE or INSTALL SIGN PANEL TY. 1, FLAG MOUNT ON SIGN POLE.

ITEM NO. 176 ****** - TRENCH AND BACKFILL WITH SCREENINGS**

1. **DESCRIPTION.** This work will consist of excavating a trench for the installation of conduit and backfilling with limestone screenings as a portion of the total backfill of the trench, all as shown in Division of Electrical Operations Standard Drawings No. 579 and No. 813. This work must meet all applicable requirements of Section 815 of the Standard Specifications.

2. **MATERIAL**. Underground Cable Marking Tape must meet the requirements of Article 1066.05 of the Standard Specifications. Backfill must meet the requirements of Article 1003.04 of the Standard Specifications.

3. **CONSTRUCTION REQUIREMENTS**. The trench must be deep enough to provide thirty inches (30") of cover over the conduit to be installed. The trench must not exceed twelve inches (12") in width unless approved by the Resident Engineer. The bottom of the trench must be tamped, and the trench inspected by the Resident Engineer before conduit is installed. All trenches must be backfilled as soon as possible after the installation of the conduit or cable. Any material excavated from the trenches that in the opinion of the Resident Engineer is satisfactory backfill, may be used for backfill above the layer of screenings. The limestone screenings must be used to fill the bottom of the trench to a depth of one foot above the top of the conduit or duct encasement. Cinders, rocks, or other inappropriate materials will not be permitted to be used as backfilling material. Backfilling material, beginning with limestone screenings must be deposited in the trench in layers not to exceed six inches (6") in depth, and must be thoroughly compacted with a mechanical tamper before the next layer is deposited in the trench. All trenches for conduit must be backfilled as per this specification. Unsuitable material must be disposed of according to the requirements of Article 202.03 of the Standard Specifications. Underground cable marking tape must be installed twelve inches (12") below the finished grade for all conduit runs.

4. **METHOD OF MEASUREMENT**. This work will be measured in feet along the centerline of the trench. Trench and backfill will not be measured for payment for conduit which is installed by pushing or by directional boring. Where more than one (1) conduit is installed in a single trench, only one run will be measured for payment.

5. **BASIS OF PAYMENT**. This work will be paid for at the contract unit price per lineal foot, measured with conduit in place, for TRENCH AND BACKFILL WITH SCREENINGS. Such price will include the cost of all excavation, furnishing and placing all backfill material, and disposal of all surplus excavated material. If sidewalk, driveway pavement or pavement must be removed and replaced, such work will be paid for separately.

MATERIAL SPECIFICATION	DRAWINGS
1462	579
1533	813

ITEM NO. 177 ****** - ELECTRICAL HANDHOLE, 30", 24" FRAME AND LID**

1. **DESCRIPTION.** This item is for supplying and installing an electrical handhole 30" in diameter with a 24" frame and lid.

2. **MATERIAL**. The frame and lid must meet the requirements of Material Specification 1458. The handhole must meet the requirements of Material Specification 1528. A 24" frame and lid must also meet the requirements of Standard Drawing 872. Bricks must meet the requirements of Section 1041 of the Standard Specifications. All other materials used must meet the appropriate material requirements of the Standard Specifications.

3. **METHOD OF CONSTRUCTION**. The handhole will be a precast concrete structure, or, if conditions merit, a cast in place concrete structure, complete with cast iron frame and cover, and conforming in detail with Drawing Number 867, except that the number of conduit openings must be as shown on the construction plans.

   Each handhole must be installed at the location specified on the plans or at the location identified by the Resident Engineer. The area where the handhole is to be placed must be properly excavated. All disposable material must be properly disposed of per Article 202.03 of the Standard Specifications. Each handhole must be set or constructed on a foundation of loose stone not less than eight inches (8") deep. The frame casting must be accurately set on a full bed of mortar to the finished elevation so that no subsequent adjustment will be necessary. It is desirable not to use a neck for the frame. However, if approved by the Resident Engineer, mortar and brick, or mortar and concrete rings, may be used to adjust to the proper grade. Adjustment rings, bricks, and frames must be set in a full mortar bed. Use of partial bricks will not be allowed. Bricks must be laid in full header courses only. Mortar must be mixed in a proportion of one (1) part of cement to three (3) parts sand by volume of dry materials. After entering laterals have been installed in place in the handhole, the openings in the wall must be plugged in an approved manner flush with the inner surface. If backfill is required, screenings must be used and properly compacted. Parkway must be restored to the proper grade. Pavement must be properly restored to the correct grade. Patching of the pavement must be done with high early strength concrete meeting the requirements of Sections 1001 and 1020 of the Standard Specifications. Sidewalks must be restored to the proper grade using a 5 inch thickness of concrete. The inside of the handhole must be clean of all debris.

4. **METHOD OF MEASUREMENT.** This item will be paid for at the contract unit price per each unit installed.

5. **BASIS OF PAYMENT**. The necessary excavation, backfilling and restoration of parkway and pavement must be made in accordance with the foregoing specifications, and

the cost thereof must be included in the unit price each for installing ELECTRICAL HANDHOLE 30", 24" FRAME AND LID. No additional payment will be allowed for restoring parkway, sidewalk, or pavement. Removal of sidewalk or pavement will be paid for separately under a different pay item.

MATERIAL SPECIFICATION	DRAWING
1458	867
1528	872

ITEM NO. 178 ****** - DRILL EXISTING MANHOLE OR HANDHOLE**

1. **DESCRIPTION.** This work will consist of drilling a hole in an existing handhole or manhole for the installation of a new conduit. This item must meet the requirements of Section 879 of the Standard Specifications.

2. **CONSTRUCTION**. The size of the hole must be as close as possible to the size of the conduit to be installed. The conduit must be installed in the drilled hole with a bushing before the hole is grouted. The conduit will be covered by a separate item. The space between the conduit and the handhole or manhole wall must be caulked with a waterproof grout. Drawing 814 provides additional information.

3. **METHOD OF MEASUREMENT**. This work will be measured per each hole drilled.

4. **BASIS OF PAYMENT.** This work will be paid for at the contract unit price each for DRILL EXISTING MANHOLE OR HANDHOLE, which price will be payment in full for drilling the hole, grouting, and any additional work required to accomplish this task.

DRAWING 814

ITEM NO. 179 ****** - GALVANIZED STEEL CONDUIT ATTACHED TO STRUCTURE 2"**

ITEM NO. 180 ****** - PVC CONDUIT IN TRENCH 2"**

ITEM NO. 181 ****** - GALVANIZED STEEL CONDUIT IN TRENCH 2”**

ITEM NO. 182 ****** - GALVANIZED STEEL CONDUIT IN TRENCH 3”**

ITEM NO. 183 ****** - GALVANIZED STEEL CONDUIT ATTACHED TO STRUCTURE 4"**

---

1. **DESCRIPTION** - this work will consist of furnishing and installing a conduit lateral of the type and size specified.

2. **MATERIALS**

Galvanized rigid steel conduit and PVC coated steel conduit must conform to the requirements of Material Specification 1462.

Polyvinyl chloride (PVC) conduit must conform to the requirements of Material Specification 1533 and to the requirements of the National Electrical Manufacturers Association Standard, Publication Number TC2 for EPC-40, or EPC-80. Conduit color will be determined by the Resident Engineer.

Coilable non-metallic conduit must be a high density polyethylene meeting the requirements of Material Specification 1533 and ASTM-D1248, Type III, Grade PE34, Category 5, and Class C. The duct must meet the requirements of Article 1088.01(c) of the Standard Specifications. The average outside diameter of the 1.25 inch duct must be 1.66 inches, with a minimum wall thickness of .15 inches for the Schedule 40 conduit, and a wall thickness of .20 for the Schedule 80 conduit. Conduit color will be as determined by the Resident Engineer.

Aluminum conduit will be rigid wall conduit with a minimum wall thickness of 0.099”. The conduit will be extruded from 6063 aluminum alloy and tempered to T-1. Aluminum conduit must meet the requirements of UL-6 and ANSI C80.5.

3. **CONSTRUCTION.**

DEFINITION OF LATERALS . A lateral will mean a conduit raceway extending from one sub-surface location to another sub-surface location, and in every case intended to encase electric circuit cable under paved surfaces, or in unpaved parkway, street or alley, where specifically designated.

LOCATIONS - Laterals must be installed at the locations shown on the construction plans. Laterals must be installed in the shortest practicable line between points of termination, or under adverse conditions, as directed by the Resident Engineer. Laterals not shown on the drawing, but necessary to be installed will be paid for at the unit price bid for laterals as additional units of construction.
INSTALLATION REQUIREMENTS - Galvanized rigid steel conduit may be installed in a trench, pushed underground, or attached to a structure. PVC conduit will normally be installed in a trench or attached to a structure. Coilable conduit will be installed in a trench. The Contractor must exercise care in installing the conduit to ensure that it is smooth, free from sharp bends or kinks, and has the minimum practicable number of bends. Crushed or deformed conduit will not be accepted. All conduit and fittings must have the burrs and rough places smoothed, and all conduit runs must be cleaned and swabbed before installation of electric cables. If cable is not to be installed immediately after cleaning of the conduit, a light weight pulling line such as 1/8" polyethylene line must be placed in the conduit and will remain in the conduit for future work. The excavation for pushing conduit must be located at least two feet (2') from the edge of pavement. All underground conduits must have a minimum cover of thirty inches (30") below grade. If conduit cannot be installed with a minimum cover of thirty inches (30"), the conduit must be encased in concrete for protection. The method of encasement and protection must be approved by the engineer. Concrete encasement will be paid for as a separate pay item.

When multiple laterals in a common trench are required, no more than three (3) three inch (3") or smaller conduit laterals can be laid on a single, horizontal level. Four or more conduit laterals must be installed on two (2) levels in accordance with instructions of the Resident Engineer.

Conduit laterals attached to a structure must be flush to the structure where possible. Clamps or hangers must be used at a maximum interval of five feet (5') to hold the conduit rigidly in place. Fittings must be supplied and installed that are compatible with the conduit in use. Expansion couplings must be used at locations where the conduit crosses expansion joints in the structure.

Conduit laterals installed under vaulted walks must be securely attached to the retaining wall by means of galvanized clamps and clamp backs held in place by anchor bolts. Laterals will be fastened as close to the underside of the sidewalk as possible, and securing clamps installed every five feet (5'). Laterals must be continuous through party walls.

Threaded fittings and bends of the same material as conduit must be furnished and installed as required. Threadless couplings may be used only for splicing existing conduit. All conduit splices, where required, will be considered incidental to this pay item.

4. **METHOD OF MEASUREMENT** . The length measured will be the number of lineal feet of conduit installed and accepted, measured in place. Each conduit will be measured separately even if in a single trench. The length for measurement will be the distance horizontally between changes in the direction of the conduit plus the conduit vertically attached to structures. All conduit on structures will be measured from point to point, whether vertical or horizontal.

5. **BASIS OF PAYMENT** - This work will be paid for at the contract unit price per lineal foot for Conduit of the type and size as specified, which price will be payment in full for furnishing and installing the conduit and fittings complete. Cleaning, swabbing, and p-lining of new conduit will be incidental to this pay item. Hangers, clamps, and fittings for conduit attached to structure will be incidental to this item. Trench and backfill will be paid for separately. Concrete encasement, if required, will be paid for separately. No additional payment will be allowed for pushing under pavements or for jack holes for conduit laterals.

MATERIAL SPECIFICATIONS	DRAWINGS
1462 1533	579 813

ITEM NO. 184 ********** - CONCRETE FOUNDATION, 28" DIAMETER, 1 1/4" ANCHOR RODS, 15" BOLT CIRCLE, 7 FEET**

ITEM NO. 185 ********** - CONCRETE FOUNDATION, 30” DIAMETER, 1” ANCHOR RODS, 15” BOLT CIRCLE, 7 FEET**

---

1. **DESCRIPTION.** The foundation will be a poured in place concrete structure used for structurally supporting street light poles or traffic signal poles.

2. **MATERIAL.** Concrete must be Portland cement concrete meeting the requirements of Section 1020 of the Standard Specifications for SI Class concrete. Reinforcement bars must meet the requirements of Article 1006.10 of the Standard Specifications. Anchor rods must meet the requirements of Material Specification 1467 and the ground rod must meet the requirements of Material Specification 1465. Conduit elbows must be PVC conduit meeting the requirements of Material Specification 1533.

3. **CONSTRUCTION**. Every foundation will be installed at the location designated and in the manner herein specified or in special cases as specifically directed. The contractor will locate foundations as per plan or as directed by the Resident Engineer. A hole must be augured for placement of the concrete form.

   The 28” diameter foundation item is for the Chicago 2000 Gateway light poles (Standard Drawing 953).

   The 30” diameter foundation is for the Extended Loop pole (Standard Drawing 956).

   Top surface of these foundations in parkway will be at an elevation of two inches (2") above grade or as required by the Engineer. Care must be taken to install a level foundation and to ensure adequate anchor rod projections for double-nut installation. The foundations must be centered back from the face of the curb in accordance with dimensions shown on the construction plans. Foundation raceways must consist of large radius conduit elbow(s) in quantity, size and type as specified on the corresponding standard drawing or in the construction plans. The elbow ends above ground will be capped with standard conduit bushings. The Contractor must furnish anchor rods, a ground rod, hardware, conduit elbow(s) and all other material shown on applicable foundation construction drawings. Depth of foundation will be as shown on the appropriate drawing. The foundation top must be chamfered 3/4 of an inch. When the foundation is installed in a sidewalk, the foundation must be installed level, with the height of the foundation as close to the height of the sidewalk as possible, or as directed by the Engineer. A proper expansion joint will be installed between the sidewalk and the foundation.

Anchor rods must be set in accordance with applicable construction plans so that when poles are mounted on the foundations, the street lighting mast arm will be properly oriented as indicated on the construction plans. The anchor rods will be set by means of a metal template which shall be submitted for approval before any foundation work is begun. The template must hold the rods vertical, and in proper position. Anchor rods must conform in all respects to the appropriate City drawing.

4. **METHOD OF MEASUREMENT**. This item will be measured per each foundation installed complete.

5. **BASIS OF PAYMENT**. Payment will be made for foundations installed in place, including elbows, in accordance with construction drawings and these specifications. All necessary excavation and restoration of pavement, sidewalk and fill to their original conditions will be included in the unit price. This work will be paid for at the contract unit price per each for CONCRETE FOUNDATION, 28" DIAMETER, 1 ¼" ANCHOR RODS, 15" BOLT CIRCLE, 7 FEET or CONCRETE FOUNDATION, 30" DIAMETER, 1" ANCHOR RODS, 15" BOLT CIRCLE, 7 FEET.

MATERIAL SPECIFICATION	DRAWINGS	
1465	953	11825
1467	837	956
1533	811	

ITEM NO. 186 ********** - ELBOW, CONDUIT, STEEL 2" ADJACENT TO EMBEDDED POLE/STRUCTURE**

---

1. **DESCRIPTION.** This item will consist of furnishing and installing a steel conduit elbow of the size indicated adjacent to a vertical surface to connect and extend a horizontal underground conduit lateral to a proposed extension of that lateral to run vertically up the face of an embedded pole, a structural steel column, or a wall of a building or an abutment for the installation of cables for street lighting, or traffic signals at the location shown on the plans or as directed by the Resident Engineer.

2. **MATERIAL.** The material must meet the requirements of the Material Specification 1462 for Rigid Steel Conduit, Zinc coated.

3. **METHOD OF INSTALLATION.** The earth must be excavated to form a trough approximately one foot wide by three feet deep adjacent to the vertical surface at the desired location and extending in a direction to meet the lateral to which the elbow will be connected. Sidewalk or pavement removal required for this excavation will be performed and paid for as work under the appropriate pay item and will not be a part of this item. A groove or channel of sufficient size to accommodate the desired elbow, and to allow the elbow to fit flush against the pole or column, will be cut into the concrete of the pole encasement, the column or the abutment foundation, as required, by use of a hydraulic chipping hammer, drill or saw. The groove must be cut in a workmanlike manner using care that the column foundation will not be cracked nor will the pole encasement concrete be cracked and separated from the pole.

   The elbow must be grouted to the concrete encasement of the pole, column or abutment foundation with a mortar consisting of one (1) part cement to three (3) parts sand by volume of dry materials to support the elbow in a vertical position. The elbow must extend eleven inches (11") above the finished surface grade and must be attached to the pole or column with stainless steel banding or to the abutment wall with a pipe clamp secured to the wall.

   The top of the pole encasement must be finished smooth. The earth must be replaced and compacted in the area of the new elbow and all concrete debris and surplus backfill must be removed from the area.

4. **METHOD OF MEASUREMENT**. This item will be measured per each elbow installation, complete.

5. **BASIS OF PAYMENT.** This work will be paid for at the contract unit price EACH for ELBOW, CONDUIT, STEEL 2” ADJACENT TO EMBEDDED POLE/STRUCTURE,

and will be payment in full for furnishing and installing the elbow, providing all hardware and materials, removing and replacing any fill, and repairing the concrete encasement of the pole or footing.

MATERIAL SPECIFICATION	DRAWING
1462	561

ITEM NO. 187 ****** - CONDUIT RISER UP POLE 2"**

---

1. **DESCRIPTION** - This item will consist of furnishing and installing a conduit riser topped with a weatherproof service head of the size indicated at the location shown on the plans and attached to an embedded steel pole, for the purpose of enclosing electric cables which will extend from an underground facility to the top of the pole at which point the conductors may be connected to aerial conductors or to a device located near the top of the pole.

2. **MATERIAL** - The material must meet the requirements of Material Specification 1462 for Rigid Steel Conduit, Zinc Coated.

3. **SERVICE RISER** - The galvanized rigid steel conduit riser twenty-five (25) feet long threaded at both ends must be connected at its lower end by means of a conduit coupling to a large radius elbow installed under a separate pay item. The conduit will be secured to the pole by means of three-quarter inch stainless steel banding installed at five foot intervals up the pole starting at 3 feet above grade. A service entrance head of the nominal size of the conduit must be securely attached to the upper end of the conduit. The riser will be wiped clean of dirt and foreign materials before painting, and must be painted with one coat of exterior enamel of the color specified. The complete cost of painting must be included in this item, and will be considered incidental to the installation of the riser.

4. **BASIS OF PAYMENT** - This work will be paid for at the contract unit price each for a CONDUIT RISER UP POLE 2", which will be payment in full for furnishing and installing the riser complete in place.

MATERIAL SPECIFICATION
1462

ITEM NO. 188 ****** - ELECTRIC CABLE IN CONDUIT, 1/C NO. 6**

---

1. Description. This work will consist of furnishing and installing electric cable as specified. The cable will be installed in conduit underground.

2. Material. The cable must meet all requirements of Material Specification 1534 of the Division of Electrical Operations, Department of Transportation, City of Chicago.

3. Construction Method. All cables must be installed with care to prevent damage to the cable. Any defects found in the cable must be reported to the resident engineer. Damaged cable must be replaced.

The cable must be pulled into the conduit with a minimum of dragging on the ground or pavement. This will be accomplished by means of reels mounted on jacks or other suitable devices located for unreeling cable directly into duct. Lubricants must be used to facilitate installation if deemed necessary by the contractor.

Bends in the cable will conform to the recommended minimum radii as outlined in the National Electric Code.

Cable passing through manholes must be trained and racked around the sides of the manhole into a permanent position. If racks are non-existent or in poor condition, the contractor must install racks. The material must be approved by the resident engineer. Any material and labor involved in training and racking the cable will be considered incidental to the cost of this pay item.

Where cable runs continue from manhole to manhole without tapping within a light pole, they will be continuous without splices unless authorized by the resident engineer.

All wire or cable in the distribution panels and control cabinets must be properly trained and have sufficient slack provided for any rearrangement of equipment or future additions. There must be at least two feet of slack in a street light pole base or street light controller base. A handhole must have at least five feet of slack and a manhole at least ten feet of slack.

4. Method of Measurement. The length of cable furnished and installed will be measured as the length of conduit plus three feet for cable entering and leaving a light pole or street light control cabinet, plus any slack in manholes or handholes.

5. Basis of Payment. This work will be paid for at the contract unit price per lineal foot for ELECTRIC CABLE IN CONDUIT, 1/C NO. 6. Such price will be payment in full for furnishing,

installing, and testing the cable, and will include all material, labor, terminations, and incidentals necessary to complete the work as per the contract plans.

MATERIAL
1534

ITEM NO. 189 ********** - ELECTRIC CABLE IN CONDUIT, TRIPLEX, 2 1/C NO. 6, 1 1/C NO. 8**

---

1. **Description** This work will consist of furnishing and installing electric cable that is triplexed. The cable must be rated at 600 volts and must consist of two number 6 conductors and one number 8 conductor. The cable will be installed in conduit underground.

2. **Material** The cable must meet all requirements of Material Specification 1534 of the Division of Electrical Operations, Department of Transportation, City of Chicago.

3. **Construction Method** All cables must be installed with care to prevent damage to the cable. Any defects found in the cable must be reported to the resident engineer. Damaged cable must be replaced.

   The cable must be pulled into the conduit with a minimum of dragging on the ground or pavement. This will be accomplished by means of reels mounted on jacks or other suitable devices located for unreeling cable directly into duct. Lubricants must be used to facilitate installation if deemed necessary by the contractor.

   Bends in the cable will conform to the recommended minimum radii as outlined in the National Electric Code.

   Cable passing through manholes must be trained and racked around the sides of the manhole into a permanent position. If racks are non-existent or in poor condition, the contractor must install racks. The material must be approved by the resident engineer. Any material and labor involved in training and racking the cable will be considered incidental to the cost of this pay item.

   Where cable runs continue from manhole to manhole without tapping within a light pole, they will be continuous without splices unless authorized by the resident engineer.

   The cable installation must be color coded so that each lead of all circuits may be easily identified and lighting units connected to the proper leg as indicated on the plans. The equipment grounding conductor (no. 8) must be color coded green.

   All wire or cable in the distribution panels and control cabinets must be properly trained and have sufficient slack provided for any rearrangement of equipment or future additions.

There must be at least three feet of slack in a street light pole base or street light controller base. A handhole must have at least five feet of slack and a manhole at least ten feet of slack.

4. **Method of Measurement** The length of triplex cable furnished and installed will be measured as the length of conduit plus three feet for cable entering and leaving a light pole or street light control cabinet, plus any slack in manholes or handholes.

5. **Basis of Payment** This work shall be paid for at the contract unit price per lineal foot for ELECTRIC CABLE IN CONDUIT, TRIPLEX, 2 1/C NO. 6, 1 1/C NO. 8. The price will be payment in full for furnishing, installing, and testing the cable, and will include all material, labor, terminations, and incidentals necessary to complete the work as per the contract plans.

MATERIAL
1534

ITEM NO. 190 ****** - CHICAGO 2000 STREET LIGHT UNIT**

DESCRIPTION. This item will consist of furnishing and installing a complete historic gateway light unit, including the pole, ornamental pole base, ornamental luminaire arm with supporting scroll, and ornamental mast head and finial at the locations shown on the plans or as directed by the Engineer.

MATERIALS. The pole shall meet the requirements of Material Specification 1505. The pole shall have the appearance as shown on Standard Drawings 930, 930B, and 930C. The pole base shall meet the requirements of Material Specification 1513 and Standard Drawing 930A. The luminaire arm shall meet the requirements of Material Specification 1514 and Standard Drawing 930. The mast head and finial shall meet the requirements of Material Specification 1505 and Standard Drawing 930C.

INSTALLATION. Installation will be according to the applicable parts of Sections 801 and 830 of the Standard Specifications. The light pole must be set plumb on a concrete foundation using double nut construction. The nuts and washers should be part of the foundation item. The pole must be set with proper orientation of the handhole and mast arm support, as directed by the Engineer. The mast arm support should be facing the roadway and be perpendicular to the curbline.

Any exposed portions of the anchor rods extending above the nuts which may interfere with setting the ornamental base must be cut off to provide the necessary clearance. The excess must not be burned off.

The base must be installed after the steel pole is erected. The base halves must be set around the pole shaft and secured to each other. The base must be set so that it sits evenly around the pole shaft. The base must be level and plumb so that it appears to be integral with the pole shaft. The base should sit level on the concrete foundation. Set screws will be used to keep the base from shifting about the shaft, and to attach the base to the pole as shown on Standard Drawing 930A.

The luminaire arm must be securely mounted to the pole by two bolts supplied under this item. The scroll must be attached to the pole and the arm with brackets as shown on Standard Drawing 930. The scroll shall provide support to the arm and luminaire. The mast head and finial shall be securely mounted to the pole and arm as shown on Standard Drawing 930C.

The contractor must utilize non-abrasive slinging materials and will otherwise exercise due care in erecting the pole and in installing the base to minimize any possible damage to the finish. When necessary, and when approved by the Engineer, the contractor will utilize, at his own expense, factory approved touch-up materials and methods to restore the finish to like new appearance and durability.

METHOD OF MEASUREMENT. This work will be measured per each unit installed and will include all labor and material necessary to install the complete lighting unit, including pole, base, luminaire arm, ornamental mast head, and finial. The luminaire will be paid for separately.

BASIS OF PAYMENT. This item will be paid for at the contract unit price each for CHICAGO 2000 STREET LIGHT UNIT, which payment will be in full for furnishing and installing the complete historic gateway lighting unit in place.

MATERIAL SPECIFICATIONS
1505 1513 1514

DRAWINGS
930 930A 930B 930C

ITEM NO. 191 ****** - EXTENDED LOOP LIGHT UNIT**

DESCRIPTION. This item will consist of furnishing and installing a complete historic light unit, including the pole, base, ornamental twin arm assembly, and internal 20A, 120V GFCI duplex receptacle at the locations shown on the plans or as directed by the Engineer.

MATERIAL. The pole shall be 16 foot height, and meet the requirements of Material Specification 1506. The pole shall have the appearance as that shown on Standard Drawings 929 and 929A. The twin arm assembly shall meet the requirements of Material Specification 1489, and shall have the appearance as that shown on Standard Drawing 911.

INSTALLATION. Installation will be according to applicable requirements of Sections 801 and 830 of the Standard Specifications. The light pole must be set plumb on a concrete foundation using double nut construction. The nuts and washers should be part of the foundation item. The pole must be set with proper orientation of the handhole, as directed by the Engineer.

Any exposed portions of the anchor rods extending above the nuts which may interfere with setting the ornamental base must be cut off to provide the necessary clearance. The excess must not be burned off.

The base must be installed after the pole is erected. The base halves must be set around the pole shaft and secured to each other. The base must be set so that it sits evenly around the pole shaft. The base must be level and plumb so that it appears to be integral with the pole shaft. The base should sit level on the concrete foundation. Set screws must be used to keep the base from shifting about the shaft, and to attach the base to the pole as shown on Standard Drawings 929 and 929A.

The twin arm assembly shall be attached to the pole tenon with stainless steel set screws, and oriented perpendicular to the curb line, as directed by the Engineer.

The contractor must utilize non-abrasive slinging materials and will otherwise exercise due care in erecting the pole and in installing the base to minimize any possible damage to the finish. When necessary, and when approved by the Engineer, the contractor will utilize, at his own expense, factory approved touch-up materials and methods to restore the finish to like new appearance and durability.

METHOD OF MEASUREMENT. This work will be measured per each unit installed and will include all labor and material necessary to install the complete lighting unit including the pole, pole base, twin arm assembly, and internal duplex GFCI receptacle. This item will not include the luminaire(s).

BASIS OF PAYMENT. This item will be paid for at the contract unit price each for EXTENDED LOOP LIGHT UNIT, which payment will be in full for furnishing and installing the complete historic style light unit in place.

MATERIAL SPECIFICATIONS

1489 1506

DRAWINGS

911 929 929A

ITEM NO. 192 ****** - LUMINAIRE, CHICAGO 2000 PENDANT, LED, TYPE III**

DESCRIPTION. This work will consist of furnishing and installing a pendant luminaire with a teardrop refractor as specified herein, as shown on the plans or as directed by the Engineer. The luminaire must be complete with LED array and driver, integral electrical components, fuses, surge suppression, arm fitter, pole wire, and mounting hardware.

MATERIAL. The luminaire must meet the requirements of Material Specification 1589 and Standard Drawing 931. The pole wire must meet the requirements of Material Specification 1351, and the fuses must meet the requirements of Material Specification 1464.

INSTALLATION. This work will meet the applicable requirements of Sections 801 and 821 of the Standard Specifications. Each luminaire must be installed per the manufacturer's instructions. Luminaires must be securely attached to the end of a two inch diameter pipe arm and leveled to provide the proper illumination. The pole wire must be spliced to the field wire at the base of the pole using splicing methods approved by the Engineer. The pole wire must be of sufficient length to connect the luminaire to the field cable at the base of the pole. Typical mast arm lengths will be 8 feet. Pole heights will be 32 feet.

METHOD OF MEASUREMENT. Each luminaire, complete with LED array and driver, components, pole wire, fuses, surge suppressor, and any appurtenances necessary to make the luminaire function once connected into the street light circuit, will count as one unit. Any labor and equipment necessary will be included.

BASIS OF PAYMENT. This work will be paid for at the contract unit price per each LUMINAIRE, CHICAGO 2000 PENDANT, LED, TYPE III, which will be payment in full for performing the work described herein. Payment will not be made until the luminaire can be shown to function properly within the street lighting circuit.

MATERIAL	DRAWING
1351 1464 1589	931

ITEM NO. 193 ****** - LUMINAIRE, ORNAMENTAL, ACORN, LED, TYPE III**

DESCRIPTION. This work will consist of furnishing and installing an acorn type ornamental luminaire with a Type III light distribution on a tenon mount, as specified on the plans or as directed by the Engineer. The luminaire must be complete with an LED array, driver, integral electrical components, fuses, surge suppression, pole wire, and mounting hardware.

MATERIALS. Materials must meet the requirements of the Bureau of Electricity Material Specifications: No. 1351 for pole wire, No. 1464 for the fuses, and No. 1586 for the luminaire. The luminaire must have the general appearance of Standard Drawing 912, in addition to a top reflector, which is 0.04" thick hydroformed aluminum with a clear anodized highly specular finish that rests on the top internal prism wall of the bottom globe section to control up light.

INSTALLATION. Installation will meet all applicable requirements of Section 801 and Article 821.03 of the Standard Specifications. The pole wire must be spliced to the field wire at the base of the pole using splicing methods approved by the Engineer. The luminaire must be properly mounted to a 3 inch high by 3 inch diameter tenon with set screws as shown on Drawing 912. The contractor must level and adjust the luminaire for proper illumination.

METHOD OF MEASUREMENT. Each luminaire, complete with LED array, driver, components, pole wire, fuses, surge suppression, and any appurtenances necessary, to make the luminaire function once connected to the street light circuit, will count as one unit. Any labor and equipment necessary will be included.

BASIS OF PAYMENT. This work will be paid for at the contract unit price per each LUMINAIRE, ORNAMENTAL, LED, TYPE III, which will be payment in full for performing the work described herein. Payment will not be made until the luminaire can be shown to function properly within the street lighting circuit.

MATERIAL	DRAWING
1351	912
1464	
1586	

ITEM NO. 194 ****** - MAINTAIN EXISTING LIGHTING SYSTEM**

DESCRIPTION. This work will consist of maintaining existing street lighting that has been designated to remain in operation during construction of the new lighting system.

MAINTENANCE PROCEDURES. Before taking over maintenance of the existing lighting system, the Contractor shall arrange to make an inspection with the Engineer to determine if any corrective action is required and to mutually agree on a date for transferring maintenance. The Contractor should normally begin maintaining the existing lighting as soon as the Contractor begins any work at the site.

The Contractor shall be responsible for maintaining the lighting system in proper operating condition. Maintenance procedures shall be as outlined in Article 801.11 of the Standard Specifications.

METHOD OF MEASUREMENT. This work will not be measured for payment.

BASIS OF PAYMENT. This work will be paid for at the contract lump sum price for MAINTAIN EXISTING LIGHTING SYSTEM, which will be payment in full for maintaining the lighting system from the mutually agreed maintenance transfer date until the de-energization of the existing lighting system. If for any reason the Contractor fails to properly maintain the lighting installation, leading to and requiring a response from City maintenance forces, the cost of such a response will be charged to the Contractor.

ITEM NO. 195 ********** - MAINTENANCE OF EXISTING FIRE ALARM CABLE, AND DISCONNECTION AND RECONNECTION OF INTERCONNECT CABLE**

Description. The Contractor shall maintain all existing traffic signal and Fire Alarm equipment between Rockwell Street and California Avenue and traffic signal at Rockwell Street and California Avenue, as described herein and as directed by the Commissioner. This work shall also include installation and removal of temporary fire alarm cable between Rockwell Street and California Avenue.

Limits and Duration: At least one week prior to commencement of construction activities, the Contractor shall conduct a signal inspection with the Commissioner, Office of Emergency Management and Communication (OEMC) and a representative of the Department of Electrical Operations (DEO) to document existing condition. The Contractor will not be held responsible for these items. In the event the Contractor fails to contact the Commissioner for the signal inspection, the Contractor shall be held responsible for all the signal items remaining defective at the completion of the construction.

The maintenance shall commence at a time after contract award that is mutually agreed upon by the Contractor, the Commissioner, OEMC and the Department of Electrical Operations (DEO), but no later than the beginning of construction by the Contractor. The maintenance responsibility will end upon installation of permanent signal interconnect and Fire alarm cable.

If construction is delayed for any reason whatsoever, the traffic signals and fire alarm shall be continuously maintained by the Contractor at no additional cost to the City.

Construction: Contractor shall coordinate with OEMC for all work related to Fire alarm cable and interconnect cable at least 10 days prior to performing any work.
Existing interconnect will be disconnected by OEMC in the existing manhole located east of the Irving Park Road bridge. Contractor shall contact OEMC for this work. Once the existing interconnect is disconnected, Contractor shall pull the cable out from the conduit and store it at manhole west of Irving Park Road bridge in a manner approved by OEMC. If the cable is damaged by the Contractor during this work, the Contractor shall replace the cable at no cost to the City. Once conduits are installed on the south side of the bridge, Contractor shall pull the interconnect cable through the installed 4" conduit to the manhole from which the interconnect was disconnected. Contractor shall then contact OEMC who will reconnect the interconnect cable.

The temporary fire alarm cable across the Irving Park Road bridge shall be installed utilizing existing poles on north side of the bridge . OEMC will furnish thetemporary cable. Contractor shall install the temporary cable in a manner approved by OEMC and at termination points as indicated by OEMC. Once temporary cable is in place, the Contractor shall contact OEMC for splicing of the temporary cable to the existing cable. Once the installation of conduit is complete, the Contractor shall contact OEMC for final fire alarm cable connection. OEMC will furnish the permanent Fire alarm Cable. Termination of fire alarm cables will be completed by OEMC forces.

Cable mounted across the roadway shall provide at least 17' clearance. Cable along sidewalk shall be mounted to provide at least 13' clearance.

Maintenance Responsibilities:

Personnel: The Contractor shall provide the Commissioner the names and telephone numbers of two persons who will be available 24 hours a day, seven days a week, to perform any necessary work on the signal and fire alarm cable.

Emergency Maintenance: The Contractor shall respond to all emergency calls from the Commissioner or other Agencies of the City of Chicago within one (1) hour after notification and provide immediate corrective action. The Contractor shall complete all repairs within time-frame noted here in. The Contractor shall repair traffic signal interconnect and traffic signals within 24 Hours and Fire Alarm repairs immediately upon notification.

When equipment has been damaged or becomes faulty beyond repair, the Contractor shall replace it with new and identical equipment. The cost of furnishing and installing the replaced equipment shall be borne by the Contractor at no additional charge to the City. The Contractor may institute action to recover damages from a responsible third party.

The Contractor shall install "STOP" signs on all approaches as a temporary means of regulating traffic during the time of signal repair.

If at any time the Contractor fails to perform all work as specified herein to keep the traffic signal and fire alarm in proper operating condition or if the Commissioner cannot contact the Contractor's designated personnel within one (1) hour, the City will perform the maintenance work required. The Contractor will be charged for the total cost of the work with a 500% mark-up. The cost of such work will be deducted from the amount due the Contractor.

Method of Measurement. This Work shall be measured per lump sum. The time frame shall begin at the mutually agreed date for Contractor to assume maintenance. The time frame shall end upon the issuance of a Signal Acceptance Notice from the Commissioner for the new installation.

Basis of Payment. This work shall be paid for at the contract unit price per lump sum for MAINTENANCE OF EXISTING TRAFFIC SIGNAL, TRAFFIC SIGNAL INTERCONNECT AND FIRE ALARM; INCLUDING INSTALLATION OF TEMPORARY EQUIPMENT which payment will be in full for maintaining the traffic and fire alarm cable, and temporary equipment during said time frame.

If at any time the Contractor fails to perform all work as specified herein to keep the traffic signal, street lighting installation in proper operating condition or if the Commissioner cannot contact the Contractor's designated personnel, the City will perform the maintenance work required. The Contractor will be charged for the total cost of the work with a 500% mark-up. The cost of such work will be deducted from the amount due to the Contractor.

.

ITEM NO. 196 ****** - REMOVE EXISTING STREET LIGHTING EQUIPMENT**

DESCRIPTION. This work will consist of removing all obsolete street lighting equipment and associated electric cable at various locations as shown on the plans.

REMOVAL. Street lighting poles (anchor base or embedded), ballast housing bases, mast arms, luminaires, controllers, secondary racks, cable and all related equipment are to be removed as indicated on the plans. Embedded poles will be removed by means other than burning where possible. If required, embedded poles must be burned off at a minimum of eighteen inches below ground level.

All equipment, with the exception of the cable, will remain the property of the City of Chicago. The Contractor must deliver the obsolete street lighting equipment to the City of Chicago yard at 2451 South Ashland Avenue, Chicago, Illinois. Twenty four hours advance notice is necessary before delivery. Street lighting cable must be removed as indicated on the plans, and become the property of the Contractor to be disposed of by him, outside the right of way, at his sole expense.

The Contractor must provide three (3) copies of a list of equipment that is to remain the property of the City, including model and serial numbers where applicable. He must also provide a copy of the contract plan or special provisions showing the quantities and type of equipment. The Contractor will be responsible for the condition of the street lighting equipment from the time of removal until the acceptance of a receipt drawn by the City indicating that the items have been returned.

METHOD OF MEASUREMENT. This work will not be measured for payment.

BASIS OF PAYMENT. This work will be paid for at the contract lump sum price for REMOVE EXISTING STREET LIGHTING EQUIPMENT at the various locations shown on the plans. This price will be payment in full for removing the equipment and disposing of it as required. The salvage value of the cable retained by the Contractor must be reflected in this contract lump sum price.

ITEM NO. 197 ********** - BREAKDOWN EXISTING HANDHOLE**
ITEM NO. 198 ********** - BREAKDOWN MANHOLE IN PARKWAY**

DESCRIPTION. Work under this item will include breaking down an existing handhole or manhole and filling in the affected area to grade.

DEMOLITION. This work will consist of removing the frame and cover of an existing handhole or manhole, breaking down the handhole/manhole walls, removing large debris, and backfilling the hole with screenings or other approved material. Backfill must be installed in 6 inch layers and tamped. If the handhole/manhole is in a parkway, the hole must be filled level to the existing grade. The top six inches of fill must be of an approved soil mixture. If the handhole/manhole is in sidewalk or in pavement, the sidewalk or pavement must be restored under a different pay item. If the frame or cover is deemed re-useable by the Engineer, the frame and/or cover must be delivered to the Division of Electrical Operations at a location identified by the Engineer. Any debris, including the frame and cover must be disposed of off-site in an approved manner. The contractor will pay for all disposal fees.

METHOD OF MEASUREMENT. This work will be paid for per each manhole or handhole removed. All backfill will be considered as part of the manhole breakdown.

BASIS OF PAYMENT. This work will be paid for at the contract unit price per each for BREAKDOWN EXISTING HANDHOLE or BREAKDOWN EXISTING MANHOLE IN PARKWAY, which price will be payment in full for all labor and materials necessary to complete the work as described. Salvaging of the frame and cover will be considered incidental to this item.

ITEM NO. 199 ****** - BREAKDOWN STREET LIGHT FOUNDATION**

---

1. **DECRIPTION.** The work will consist of removing a concrete foundation for the specific item referenced. The foundation must be completely removed or broken down to a point three feet below grade, disposing of the debris off-site in an approved manner, backfilling the excavation with screenings or other approved backfill material, and reconstructing the surface area. If the foundation is in a parkway, the parkway must be properly restored with dirt to the existing level. If the foundation is in sidewalk, the sidewalk must be restored under a different pay item and will not be considered as part of this work. Debris must be disposed of according to Article 202.03 of the Standard Specifications. Backfill must meet the requirements of Article 1003.04 of the Standard Specifications.

2. **METHOD OF MEASUREMENT**. This work will be measured per each foundation removed, which will also include proper disposal and backfill.

3. **BASIS OF PAYMENT**. This work will be paid for at the contract unit price each for BREAKDOWN STREET LIGHT FOUNDATION, which price will be payment in full for all labor and materials necessary to complete the work as described above. No additional payment will be made for backfill or disposal of debris.

ITEM NO. 200 ****** - TRENCH AND BACKFILL FOR ELECTRICAL WORK**

DESCRIPTION. This item will consist of constructing and backfilling a trench for the accommodation of raceways, unit duct, and cables.

MATERIALS. Underground warning tape shall conform to the requirements of Section 1066 of the Standard Specifications.

INSTALLATION. Trenching and backfill operations shall conform to the requirements of Section 810 of the Standard Specifications.

METHOD OF MEASUREMENT. This work will be measured per foot of trench constructed and backfilled. Measurement will be made along the centerline of the trench. The trench will only be measured once for payment, regardless of the number of conduits/cables installed. Underground warning table is included in this item and will not be measured for separate payment.

BASIS OF PAYMENT. This item will be paid for at the contract unit price per foot for TRENCH AND BACKFILL FOR ELECTRICAL WORK, which payment will be in full for constructing and backfilling the trench.

ITEM NO. 201 ********** - ELECTRIC CABLE IN TRENCH, 600V (XLP-TYPE USE) 1/C NO. 6**

ITEM NO. 202 ********** - ELECTRIC CABLE IN TRENCH, 600V (XLP-TYPE USE) 1/C NO. 8**

ITEM NO. 203 ********** - ELECTRIC CABLE IN CONDUIT, 600V (XLP-TYPE USE) 1/C NO. 10**

DESCRIPTION. This item will consist of furnishing and installing direct burial power cable, complete with identification, splicing, and terminations.

MATERIALS. The cable shall conform to the requirements of Section 1066 of the Standard Specifications.

INSTALLATION. Cable shall be installed directly from the reels on which the cable was shipped. Dragging or laying cable on the ground will not be permitted. Cable shall not be bent to a radius less than the manufacturer's recommended bending radius, either in permanent placement or during installation. The cable shall be installed in continuous spans between terminal points, and splicing will only be permitted in pole handholes or below-grade handholes.

All trenches shall be backfilled as soon as practicable after placing the cable.

METHOD OF MEASUREMENT. This work will be measured per foot installed and will include all labor and material necessary to install the cable. Measurement will be made in straight lines between changes in direction and to the center of equipment and boxes. 3 ft of extra cable will be allowed when terminating at a light pole or handhole. 1 ft of extra cable will be allowed at pull boxes, junction boxes, and similar locations.

The vertical distance of cable required for pole foundations, etc., and the depth of any burial will be measured for payment. Changes in direction shall assume perfect straight line runs, ignoring actual raceway sweeps.

BASIS OF PAYMENT. This item will be paid for at the contract unit price per foot for ELECTRIC CABLE IN TRENCH, 600V (XLP-TYPE USE) 1/C NO. 6, ELECTRIC CABLE IN TRENCH, 600V (XLP-TYPE USE) 1/C NO. 8, or ELECTRIC CABLE IN CONDUIT, 600V (XLP-TYPE USE) 1/C NO. 10 which payment will be in full for furnishing and installing the electric cable complete in place.

ITEM NO. 204 ****** - PATH LIGHT FIXTURE**

DESCRIPTION: This item will consist of furnishing and installing an LED luminaire on a concrete light pole for illumination of a shared-use path.

MATERIALS: The LED luminaire shall be subject to Commissioner approval with field installed backlight control shield and bird spikes.

INSTALLATION: The luminaire shall be leveled/adjusted after poles are set and vertically aligned before being energized. When the night time check of the lighting system by the Engineer indicates that any luminaires are misaligned, the misaligned luminaires shall be corrected at no additional cost to the City or Park District.

#10 AWG pole wiring shall be provided with the luminaire. Included with the pole wiring shall be a surge protector and fusing located in the pole handhole. Provide two pole fuse holder with 3A KTK fuses. Wire shall be trained within the pole so as to avoid abrasion or damage to the insulation. The pole wire shall be terminated in a manner that avoids sharp kinks, pinching, and pressure on the insulation. Wires shall be trained away from heat sources within the luminaire. Wires shall be terminated so all strands are extended to the full depth of the terminal lug, with the insulation removed far enough so it abuts the shoulder of the lug, but is not compressed as the lug is tightened.

METHOD OF MEASUREMENT: This work will be measured per each unit installed and will include all labor and material necessary to install the light fixture, and includes pole wire, fusing, and surge suppression.

BASIS OF PAYMENT: This item will be paid for at the contract unit price each for PATH LIGHT FIXTURE, which payment will be in full for furnishing and installing the path light fixture complete in place.

ITEM NO. 205 ****** - PATH UNDERPASS LUMINAIRE**

DESCRIPTION: This item will consist of furnishing and installing a wall or ceiling mounted LED luminaire for illumination of a shared-use path.

MATERIALS: The LED luminaire shall be according to City of Chicago DEO Material Specification 1604.

INSTALLATION: The Contractor shall provide mounting hardware as required for a complete installation and install the luminaire in accordance with the manufacturer's recommendations and as shown on the Plans.

A 6" x 6" x 4" stainless steel junction box shall be provided adjacent to each luminaire and paid for separately. A section of ½" diameter liquid tight flexible metallic conduit between the junction box and luminaire is included in the price of the luminaire.

METHOD OF MEASUREMENT: This work will be measured per each underpass luminaire installed and will include all labor and material necessary to install the underpass luminaire, and includes mounting hardware, accessories, and ½" diameter liquid tight flexible metallic conduit to the adjacent junction box.

BASIS OF PAYMENT: This item will be paid for at the contract unit price each for PATH UNDERPASS LUMINAIRE, which payment will be in full for furnishing and installing the path underpass luminaire complete in place.

MATERIAL SPECIFICATION
1604

ITEM NO. 206 ****** - PATH LIGHT POLE**

DESCRIPTION. This item will consist of furnishing and installing a reinforced concrete light pole with elliptical aluminum mast arm designed for direct burial installation at the locations shown on the plans or as directed by the Engineer.

MATERIALS. The pole shall be 700 Series spun octagonal from an approved manufacturer or as approved by the Commissioner.

The mast arm shall be a single member, with raceway openings extending through the bracket. Raceway openings shall be free of burrs and rough edges that may be injurious to the cabling. Exterior surfaces of the arms shall be free of all dents, cracks, or other imperfections. The arm shall be made of round, seamless aluminum alloy tube according to ASTM B221 6063-T6. The arm shall attach to the concrete pole by a clamp type bracket with bolts, nuts, and lock washers.

INSTALLATION. Installation shall be according to the manufacturer's recommendations and the applicable portions of Sections 801 and 830 of the Standard Specifications.

A 4" thick (min.) layer of fine wet limestone shall be provided around the pole's embedded stub section as backfill. Backfill shall be tamped and compacted in 6 in. lifts. A 6" settling pad of coarse gravel shall be provided below the pole's embedded stub section.

METHOD OF MEASUREMENT. This work will be measured per each unit installed and will include all labor and material necessary to install the light pole and arm, and includes excavation, backfill, and disposal of surplus excavated material. The luminaire will be paid for separately.

BASIS OF PAYMENT. This item will be paid for at the contract unit price each for PATH LIGHT POLE, which payment will be in full for furnishing and installing the path light pole with elliptical mast arm complete in place.

ITEM NO. 207 ****** - CONTROLLER, UNDERPASS LIGHTING, WALL MOUNTED, 1 PHASE, 60 AMP**

1. **DESCRIPTION:** This work shall consist of furnishing and installing an underpass lighting controller with aluminum cabinet containing various electro-mechanical devices to automatically control energizing and de-energizing of street lighting circuits, and to provide protection for the equipment so controlled. The controller will be mounted on a bridge abutment wall or as shown on the plans.

2. **INSTALLATION:**

The installation of feeder cables and branch circuit cables shall be performed in a neat and workmanlike manner with all cable trained around the cabinet, secured to the proper terminals and identified either by tagging of the cables, or by identification of the branch breakers, all as part of the controller installation and not as a separate pay item.

The lighting circuit shall be placed in operation as soon as practicable with the Contractor being charged for the energy until the circuits are accepted by the City of Chicago, Bureau of Electricity.

3. **METHOD OF MEASUREMENT:** Installation of the underpass lighting controller will be measured for payment as each.

4. **BASIS OF PAYMENT:** This work will be charged for at the contract unit price each for a CONTROLLER, UNDERPASS LIGHTING, WALL MOUNTED, 1 PHASE, 60 AMP, which shall be payment in full for furnishing and installing the controller complete in place.

MATERIAL SPECIFICATION	DRAWING
1497	861 869

ITEM NO. 208 ****** - SERVICE CONNECTION TO CECO LINE**

DESCRIPTION. This work will consist of providing a service connection from City cable to a Commonwealth Edison secondary cable. For an aerial service, this will be on a wood pole. For an underground service, this will be in a CECO manhole.

INSTALLATION. This work will consist of splicing or terminating City service cable to a Commonwealth Edison secondary cable, as directed by the Engineer. The contractor must obtain permission from Edison for the service at the required location. The contractor will inform Edison of the load required. Edison will make the connections, unless Edison gives the contractor permission to make the connections. Any costs associated with the connection will be borne by the contractor.

METHOD OF MEASUREMENT. The service connection will be counted as one unit, and will include all labor and material needed to make a successful service connection.

BASIS OF PAYMENT. This work will be paid for at the contract unit price for each SERVICE CONNECTION TO CECO LINE, which payment will be in full for providing all material and labor to make the necessary connections.

DRAWING

11925

ITEM NO. 209 ****** - SERVICE INSTALLATION 100 AMP**

1. **Description.** This work will consist of furnishing and installing a service on a Commonwealth Edison Company wood pole for either a 120 volt traffic signal service installation, or for a 240 volt street lighting service installation per City of Chicago Drawing Number 11925.

The 100 ampere installation can be used for either a 120 volt or 240 volt service. The 200 ampere installation can be used only for the 240 volt service.

2. **Service Junction Cabinet**. The cabinet must be cast from aluminum and met all the requirements of standard drawing 11922. Its dimensions must not exceed eight (8) inches in width, eighteen (18) inches in height and nine (9) inches in depth, and it must be weather proof. It must contain a two (2) pole disconnecting device, with bridge contacts and barrier strip, subject to approval. The disconnecting device must be rated for 200 amps and 600 volts. A suitable ground lug, subject to approval, to accommodate a 1/C #2, 1/C #4, 1/C #2/0 or 1/C #1/0 AWG stranded copper conductor must be provided. Any alternate cabinets which are considered equal to this may be considered.

3. **Cable Grip.** A one and one quarter inch (1 1/4") cable grip fitting must be installed at top of cabinet to accommodate a 3/C #2, #4, #2/0 or #1/0 AWG service cable.

4. **Service Riser**. A two (2) inch galvanized rigid steel conduit riser terminated at the bottom with a galvanized rigid steel, large radius, conduit elbow must be installed by the contractor on the Commonwealth Edison Company service pole as shown on City of Chicago Drawing Number 11925. The top of the riser must terminate in the service junction cabinet and the end of the elbow must connect to the horizontal conduit lateral leading to the control cabinet. Payment for the riser, elbow, and attachments must be included in the price bid for the complete Commonwealth Edison Company pole service junction unit. The laterals will be paid for separately under different pay items.

5. **Cable.** A sufficient length of three (3) conductor service entrance cable must be coiled at the top of the box in order to reach the Commonwealth Edison Company secondary wires for connection. The three (3) conductor service entrance cable must meet the requirements of Bureau of Electricity Specification Number 1457, or an approved equal. The black and red conductors must be connected to the disconnect device and the white conductor to the ground lug, for the 240 volt street lighting service installation. The black

conductor must be connected to the disconnect, and the white to the ground lug, for the 120 volt traffic signal service installation. The red conductor must be taped and coiled inside box for future use.

6. **Cables in Service Riser**. Cables must extend continuously from the load side of the disconnect device, down the riser and elbow, and in the conduit lateral to the control cabinet. Payment for cables in riser and elbow will be included in separate pay items, and will not be considered as part of this pay item.

7. **Basis of Payment.** This work will be paid for at the contract unit price EACH for SERVICE INSTALLATION 100 AMPERE or SERVICE INSTALLATION 200 AMPERE, which price must be payment in full for furnishing and installing the service equipment complete. Any charges by the utility company to provide electrical service to the service installation will be paid for by the contractor.

MATERIAL SPECIFICATION	DRAWING
1457	11922
1462	11925

ITEM NO. 210 ****** - SERVICE CABLE, 3/C NO. 2**

DESCRIPTION. This work will consist of providing service cable from one wood pole to another, for the purpose of connecting a City service box or street light controller mounted on a Commonwealth Edison pole to a Commonwealth Edison secondary cable located on another pole.

MATERIAL. The cable must meet the requirements of Material Specification 1457.

INSTALLATION. This work will consist of providing a sufficient length of cable and installing the cable as shown on the plans or as directed by the Engineer.

METHOD OF MEASUREMENT. The cable will be measured per lineal foot, and will include only horizontal distances. No compensation will be made for cable sag or vertical distances.

BASIS OF PAYMENT. This work will be paid for at the contract unit price per lineal foot for SERVICE CABLE, 3/C #2, which payment will be in full for providing the cable, all labor and any material needed to attach the cable to the poles.

ITEM NO. 211 ****** - MONITORING OF EXISTING FACILITIES**

Description: This work shall consist of monitoring buildings, utilities, and other structures susceptible to movement. Additional monitoring of facilities may be required and these will be determined by the Commissioner during the work. The additional monitoring will be included in this item.

This special provision shall at minimum apply to the following adjacent structures:

- Children's Lighthouse North Center Chicago, 2600 W. Irving Park Road, Chicago, IL 60618
- River Park North Townhomes, 2741, 2655 W. Irving Park. Road, Chicago, IL 60618
- Cable Services, 2601 W. Irving Park Road, Chicago, IL 60618
- MWRD Drop Shaft Structure (East Approach Slab)

Requirements: The Contractor shall monitor adjacent buildings for both vibration and displacement. The contractor shall designate a minimum of two monitoring point locations per building adjacent to the bridge. The monitoring point locations shall be spaced as evenly as possible along the building edge at the interface between the bridge and the building property. The monitoring points for vibration and displacement do not have to be at the same location, but should be relatively close. The Contractor shall coordinate with the building to ensure the proposed monitoring locations are acceptable to the building and accessible to both the Contractor and Commissioner. The Contractor is to review proposed construction operations adjacent to utilities and install Utility Monitoring Points along any utility susceptible to vibrations or displacement. Proposed locations of building and utility displacement monitoring points are to be submitted to the Commissioner for approval prior to construction.

Vibration Monitoring: The Contractor shall employ the services of a seismic monitoring consultant as approved by the Commissioner. Monitoring point locations and frequency of data collection shall be as determined by the Contractor's Consultant and are subject to the approval of the Commissioner. All vibration monitoring devices (seismographs) shall be attached to the floor of the buildings they are monitoring. The limit of acceptable vibration at the interface between the existing building and the bridge shall be 0.5 in/s (inches per second) peak particle velocity. The Contractor's Consultant may propose a Limiting Value and Threshold Value of vibrations. When the Threshold Value is reached, the Contractor stops work and meets with the engineer to determine the best course of action to reduce the vibrations (or minimize further displacement). Once the Limiting Value is reached, the work is stopped and a more formal response plan is submitted for approval before work can proceed. All seismographs on the project shall be programmed to actuate an alarm when the vibration limit is exceeded. The alarm notification protocol shall consist of immediate dialing of mobile telephone numbers of the Commissioner and Contractor.

If the vibration limits are exceeded, all vibration including work within 100 feet of the existing building shall be stopped. Work may resume at the direction of the Commissioner with the Contractor continuing to closely monitor vibration in the area of the alarm.

Displacement Monitoring: The Contractor shall provide the exact horizontal and vertical location of the displacement monitoring points to the Commissioner prior to the commencement of any construction activities. The data shall be presented in a tabular format and shall include horizontal positions (stations and offsets or Northing and Easting) as well as vertical elevation (Chicago City Datum) to a minimum of one hundredth of a foot (0.01').

Monitoring Frequency: During the beginning phase of each stage of demolition and construction, displacement monitoring shall be performed at the beginning and end of each work day at a minimum. These surveying intervals are the minimum required, and more frequent monitoring may be required by the Commissioner as field conditions warrant.

If after a period of time resulting in movements that are small in magnitude, monitoring frequency can be reduced to a frequency as established by the Commissioner. If resulting movements become random in nature and/or large in magnitude, the frequency shall be increased as directed by the Commissioner. The frequency of readings will be dictated by the phase of current construction, but must be sufficient to detect serious movements so that corrective measures can be initiated immediately.

Monitoring readings for displacements shall be dated, recorded, and reported to the Commissioner in the same day the readings are taken.

Vibration monitoring shall be a continuous and uninterrupted process. During demolition within 50 feet of a vibration monitoring point location, the Contractor shall report the results of the largest amplitude of vibration to the Commissioner on the same day. At all other times, the vibration report shall be submitted weekly.

Construction Requirements: The Contractor shall hold a preconstruction conference with CDOT and the seismic monitoring consultant to discuss planned activities that will happen within 100 feet of the building. Before the start of construction, the contractor shall complete a pre-construction inspection of existing buildings that are located along the bridge. This survey shall include mapping of all current deterioration/distress on elevation and plan views of the buildings or building elements. The survey shall also include videotaping and close-up photographs of 100% of the building contents (floors, walls, and ceilings) within 25 feet of the edge of the bridge. The results of this pre-construction survey shall be consolidated in a Pre-Construction Survey Report. The locations of the displacement monitoring points shall be included in the Report. The Report shall be reviewed and deemed complete by the Commissioner prior to the commencement of any work.

The Contractor must devise means and methods of construction that will not exceed the specified vibration limits. The Contractor is advised that particularly careful demolition requirements will be required at the edges of the bridge where the property line is immediately adjacent to the bridge.

Corrective Measures: If at any time resulting movements are serious in nature or cause damage to facilities of property, the Contractor shall stop work immediately and the necessary corrective measures shall be initiated as directed by the Commissioner. Damage to utilities, adjacent buildings and structures as a result of the work activity of the Contractor will be corrected by the Contractor

as determined by the Commissioner and the utility. No additional compensation will be due to the Contractor for repairing these facilities.

Submittals: The Contractor must submit a Vibration and Displacement Control Plan to the Commissioner for approval. The Plan must be approved prior to the commencement of work. The Plan must include, but is not limited to the following:

- Locations of all monitoring points (Vibration and displacement)
- Procedure and outline for how the data will be provided to the Commissioner
- Type of seismograph to be used (Submit to Commissioner for Approval)
- Limits of acceptable vibration criteria
- List of pneumatic equipment to be sued during demolition operations
- Contact information for the Seismic Monitoring Consultant
- Timetable that outlines the duration that each monitoring point will be maintained and checked.
- A "Response Plan" to detail how the Contractor will address any concerns with vibration or displacement.

Additional Submittals include:

- Preconstruction Survey Report
- Daily reports of all displacement monitoring
- Weekly reports of all vibration monitoring

Method of Measurement: The work under this item and as described herein will not be measured separately. It will be paid for as lump sum.

Basis of Payment: This work will be paid at the contract unit price per lump sum for MONITORING OF EXISTING FACILITIES which payment shall be full compensation for the work described herein and as directed by the Commissioner.

ITEM NO. 212 ****** - TRAINEES**

Description. Work under this item shall be performed according to BDE Special Provision for TRAINING SPECIAL PROVISION.

INDEX
FOR
SUPPLEMENTAL SPECIFICATIONS
AND RECURRING SPECIAL PROVISIONS

Adopted January 1, 2018

This index contains a listing of SUPPLEMENTAL SPECIFICATIONS and frequently used RECURRING SPECIAL PROVISIONS, and LOCAL ROADS AND STREETS RECURRING SPECIAL PROVISIONS.

ERRATA Standard Specifications for Road and Bridge Construction
(Adopted 4-1-16) (Revised 1-1-18)

SUPPLEMENTAL SPECIFICATIONS

Std. Spec. Sec.		Page No.
106	Control of Materials	1
403	Bituminous Surface Treatment (Class A-1, A-2, A-3)	2
404	Micro-Surfacing and Slurry Sealing	3
405	Cape Seal	14
420	Portland Cement Concrete Pavement	24
442	Pavement Patching	26
502	Excavation for Structures	27
503	Concrete Structures	29
504	Precast Concrete Structures	32
542	Pipe Culverts	33
586	Sand Backfill for Vaulted Abutments	34
630	Steel Plate Beam Guardrail	36
631	Traffic Barrier Terminals	39
670	Engineer's Field Office and Laboratory	40
701	Work Zone Traffic Control and Protection	41
704	Temporary Concrete Barrier	42
781	Raised Reflective Pavement Markers	44
888	Pedestrian Push-Button	45
1003	Fine Aggregates	46
1004	Coarse Aggregates	47
1006	Metals	50
1020	Portland Cement Concrete	51
1050	Poured Joint Sealers	53
1069	Pole and Tower	55
1077	Post and Foundation	56
1096	Pavement Markers	57
1101	General Equipment	58
1102	Hot-Mix Asphalt Equipment	59
1103	Portland Cement Concrete Equipment	61
1106	Work Zone Traffic Control Devices	63

CHECK SHEET FOR RECURRING SPECIAL PROVISIONS

The following RECURRING SPECIAL PROVISIONS indicated by an "X" are applicable to this contract and are included by reference:

Adopted: April 1, 2016
Revised: January 1, 2018

RECURRING SPECIAL PROVISIONS

The following RECURRING SPECIAL PROVISIONS indicated by an "X" are applicable to this contract and are included by reference:

CHECK SHEET #			PAGE NO.
1	X	Additional State Requirements for Federal-Aid Construction Contracts	64
2	X	Subletting of Contracts (Federal-Aid Contracts)	67
3	X	EEO	68
4		Specific EEO Responsibilities Non Federal-Aid Contracts	78
5		Required Provisions - State Contracts	83
6		Asbastos Bearing Pad Removal	89
7		Asbestos Waterproofing Membrane and Asbestos HMA Surface Removal.....	90
8	X	Temporary Stream Crossings and In-Stream Work Pads	91
9		Construction Layout Stakes Except for Bridges	92
10	X	Construction Layout Stakes	95
11		Use of Geotextile Fabric for Railroad Crossing	98
12		Subsealing of Concrete Pavements	100
13		Hot-Mix Asphalt Surface Correction	104
14		Pavement and Shoulder Resurfacing	106
15		Patching with Hot-Mix Asphalt Overlay Removal	107
16		Polymer Concrete	109
17		PVC Pipeliner	111
18		Bicycle Racks	112
19		Temporary Portable Bridge Traffic Signals	114
20		Work Zone Public Information Signs	116
21		Nighttime Inspection of Roadway Lighting	117
22		English Substitution of Metric Bolts	118
23		Calcium Chloride Accelerator for Portland Cement Concrete	119
24		Quality Control of Concrete Mixtures at the Plant	120
25	X	Quality Control/Quality Assurance of Concrete Mixtures	128
26		Digital Terrain Modeling for Earthwork Calculations	144
27		Reserved	146
28		Preventive Maintenance – Bituminous Surface Treatment (A-1)	147
29		Reserved ……..…	153
30		Reserved	154
31		Reserved	155
32		Temporary Raised Pavement Markers	156
33		Restoring Bridge Approach Pavements Using High-Density Foam	157
34		Portland Cement Concrete Inlay or Overlay	160
35		Portland Cement Concrete Partial Depth Hot-Mix Asphalt Patching ……..	164

CHECK SHEET FOR LOCAL ROADS AND STREETS RECURRING SPECIAL PROVISIONS

Adopted: April 1, 2016

Revised: January 1, 2018

The following LOCAL ROADS AND STREETS RECURRING SPECIAL PROVISIONS indicated by an "X" are applicable to this contract and are included by reference:

LOCAL ROADS AND STREETS RECURRING SPECIAL PROVISIONS

CHECK SHEET #			PAGE NO.
LRS 1	☐	**Reserved**	168
LRS 2	☐	Furnished Excavation	169
LRS 3	☒	Work Zone Traffic Control Surveillance	170
LRS 4	☐	Flaggers in Work Zones	171
LRS 5	☒	Contract Claims	172
LRS 6	☒	Bidding Requirements and Conditions for Contract Proposals	173
LRS 7	☐	Bidding Requirements and Conditions for Material Proposals	179
LRS 8	☐	**Reserved**	185
LRS 9	☐	Bituminous Surface Treatments	186
LRS 10	☐	**Reserved**	187
LRS 11	☐	Employment Practices	188
LRS 12	☐	Wages of Employees on Public Works	190
LRS 13	☐	Selection of Labor	192
LRS 14	☐	Paving Brick and Concrete Paver Pavements and Sidewalks	193
LRS 15	☐	Partial Payments	196
LRS 16	☐	Protests on Local Lettings	197
LRS 17	☒	Substance Abuse Prevention Program	198
LRS 18	☐	Multigrade Cold Mix Asphalt	199

CHECK SHEET FOR BDE SPECIAL PROVISIONS

For the January 19 and March 9, 2018 Lettings

The following special provisions indicated by an "x" are applicable to this contract and will be included by the Project Development and Implementation Section of the BD&E. An * indicates a new or revised special provision for the letting.

	File Name	#		Special Provision Title	Effective	Revised
	80099	1		Accessible Pedestrian Signals (APS)	April 1, 2003	Jan. 1, 2014
	80382	2		Adjusting Frames and Grates	April 1, 2017	
	80274	3		Aggregate Subgrade Improvement	April 1, 2012	April 1, 2016
	80192	4		Automated Flagger Assistance Device	Jan. 1, 2008	
	80173	5		Bituminous Materials Cost Adjustments	Nov. 2, 2006	Aug. 1, 2017
	80241	6		Bridge Demolition Debris	July 1, 2009	
	5026I	7		Building Removal-Case I (Non-Friable and Friable Asbestos)	Sept. 1, 1990	April 1, 2010
	5048I	8		Building Removal-Case II (Non-Friable Asbestos)	Sept. 1, 1990	April 1, 2010
	5049I	9		Building Removal-Case III (Friable Asbestos)	Sept. 1, 1990	April 1, 2010
	5053I	10		Building Removal-Case IV (No Asbestos)	Sept. 1, 1990	April 1, 2010
	80366	11	X	Butt Joints	July 1, 2016	
	80386	12		Calcium Aluminate Cement for Class PP-5 Concrete Patching	Nov. 1, 2017	
*	80396	13		Class A and B Patching	Jan. 1, 2018	
	80384	14	X	Compensable Delay Costs	June 2, 2017	
	80198	15		Completion Date (via calendar days)	April 1, 2008	
	80199	16		Completion Date (via calendar days) Plus Working Days	April 1, 2008	
	80293	17		Concrete Box Culverts with Skews > 30 Degrees and Design Fills ≤ 5 Feet	April 1, 2012	July 1, 2016
	80311	18	X	Concrete End Sections for Pipe Culverts	Jan. 1, 2013	April 1, 2016
	80277	19		Concrete Mix Design – Department Provided	Jan. 1, 2012	April 1, 2016
	80261	20	X	Construction Air Quality – Diesel Retrofit	June 1, 2010	Nov. 1, 2014
	80387	21		Contrast Preformed Plastic Pavement Marking	Nov. 1, 2017	
	80029	22		Disadvantaged Business Enterprise Participation	Sept. 1, 2000	July 2, 2016
*	80378	23		Dowel Bar Inserter	Jan. 1, 2017	Jan. 1, 2018
	80388	24	X	Equipment Parking and Storage	Nov. 1, 2017	
	80229	25		Fuel Cost Adjustment	April 1, 2009	Aug. 1, 2017

	File Name	#		Special Provision Title	Effective	Revised
	80304	26		Grooving for Recessed Pavement Markings	Nov. 1, 2012	Nov. 1, 2017
	80246	27	X	Hot-Mix Asphalt – Density Testing of Longitudinal Joints	Jan. 1, 2010	April 1, 2016
*	80347	28		Hot-Mix Asphalt – Pay for Performance Using Percent Within Limits – Jobsite Sampling	Nov. 1, 2014	Jan. 1, 2018
	80383	29		Hot-Mix Asphalt – Quality Control for Performance	April 1, 2017	Nov. 1, 2017
	80376	30	X	Hot-Mix Asphalt – Tack Coat	Nov. 1, 2016	
*	80392	31	X	Lights on Barricades	Jan. 1, 2018	
	80336	32		Longitudinal Joint and Crack Patching	April 1, 2014	April 1, 2016
*	80393	33		Manholes, Valve Vaults, and Flat Slab Tops	Jan. 1, 2018	
	80045	34		Material Transfer Device	June 15, 1999	Aug. 1, 2014
*	80394	35		Metal Flared End Section for Pipe Culverts	Jan. 1, 2018	
	80165	36		Moisture Cured Urethane Paint System	Nov. 1, 2006	Jan. 1, 2010
	80349	37		Pavement Marking Blackout Tape	Nov. 1, 2014	April 1, 2016
	80371	38	X	Pavement Marking Removal	July 1, 2016	
*	80390	39	X	Payments to Subcontractors	Nov. 2, 2017	
	80377	40	X	Portable Changeable Message Signs	Nov. 1, 2016	April 1, 2017
	80389	41	X	Portland Cement Concrete	Nov. 1, 2017	
	80359	42	X	Portland Cement Concrete Bridge Deck Curing	April 1, 2015	Nov. 1, 2017
	80385	43		Portland Cement Concrete Sidewalk	Aug. 1, 2017	
	80300	44		Preformed Plastic Pavement Marking Type D - Inlaid	April 1, 2012	April 1, 2016
	80328	45		Progress Payments	Nov. 2, 2013	
	3426I	46		Railroad Protective Liability Insurance	Dec. 1, 1986	Jan. 1, 2006
	80157	47		Railroad Protective Liability Insurance (5 and 10)	Jan. 1, 2006	
*	80306	48		Reclaimed Asphalt Pavement (RAP) and Reclaimed Asphalt Shingles (RAS)	Nov. 1, 2012	Jan. 1, 2018
*	80395	49		Sloped Metal End Section for Pipe Culverts	Jan. 1, 2018	
	80340	50		Speed Display Trailer	April 2, 2014	Jan. 1, 2017
	80127	51		Steel Cost Adjustment	April 2, 2004	Aug. 1, 2017
*	80391	52	X	Subcontractor Mobilization Payments	Nov. 2, 2017	
	80317	53		Surface Testing of Hot-Mix Asphalt Overlays	Jan. 1, 2013	April 1, 2016
	80298	54	X	Temporary Pavement Marking (NOTE: This special provision was previously named *"Pavement Marking Tape Type IV"*.)	April 1, 2012	April 1, 2017

	File Name	#		Special Provision Title	Effective	Revised
	20338	55	X	Training Special Provisions	Oct. 15, 1975	
*	80318	56		Traversable Pipe Grate for Concrete End Sections (NOTE: This special provision was previously named "*Traversable Pipe Grate*".)	Jan. 1, 2013	Jan. 1, 2018
	80288	57	X	Warm Mix Asphalt	Jan. 1, 2012	April 1, 2016
	80302	58	X	Weekly DBE Trucking Reports	June 2, 2012	April 2, 2015
	80071	59		Working Days	Jan. 1, 2002	

The following special provisions are in the 2018 Supplemental Specifications and Recurring Special Provisions.

File Name	Special Provision Title	New Location	Effective	Revised
80368	Light Tower	Article 1069.08	July 1, 2016	
80369	Mast Arm Assembly and Pole	Article 1077.03(a)(1)	July 1, 2016	
80338	Portland Cement Concrete Partial Depth Hot-Mix Asphalt Patching	Recurring CS #35	April 1, 2014	April 1, 2016
80379	Steel Plate Beam Guardrail	Articles 630.02, 630.05, 630.06, and 630.08	Jan. 1, 2017	
80381	Traffic Barrier Terminal, Type 1 Special	Article 631.04	Jan. 1, 2017	
80380	Tubular Markers	Articles 701.03, 701.15, 701.18, and 1106.02	Jan. 1, 2017	

The following special provisions require additional information from the designer. The additional information needs to be submitted as a separate document. The Project Development and Implementation section will then include the information in the applicable special provision. The Special Provisions are:

- Bridge Demolition Debris
- Building Removal - Case I
- Building Removal – Case II
- Building Removal - Case III
- Building Removal-Case IV
- Completion Date
- Completion Date Plus Working Days
- DBE Participation
- Material Transfer Device
- Railroad Protective Liability Insurance
- Training Special Provisions
- Working Days

BUTT JOINTS (BDE)

Effective: July 1, 2016

Add the following to Article 406.08 of the Standard Specifications.

"(c) Temporary Plastic Ramps. Temporary plastic ramps shall be made of high density polyethylene meeting the properties listed below. Temporary plastic ramps shall only be used on roadways with permanent posted speeds of 55 mph or less. The ramps shall have a minimum taper rate of 1:30 (V:H). The leading edge of the plastic ramp shall have a maximum thickness of 1/4 in. (6 mm) and the trailing edge shall match the height of the adjacent pavement ± 1/4 in. (± 6 mm).

The ramp will be accepted by certification. The Contractor shall furnish a certification from the manufacturer stating the temporary plastic ramp meets the following requirements.

Physical Property	Test Method	Requirement
Melt Index	ASTM D 1238	8.2 g/10 minutes
Density	ASTM D 1505	0.965 g/cc
Tensile Strength @ Break	ASTM D 638	2223 psi (15 MPa)
Tensile Strength @ Yield	ASTM D 638	4110 psi (28 MPa)
Elongation @ Yield 1/, percent	ASTM D 638	7.3 min.
Durometer Hardness, Shore D	ASTM D 2240	65
Heat Deflection Temperature, 66 psi	ASTM D 648	176 ºF (80 ºC)
Low Temperature Brittleness, F_{50}	ASTM D 746	<-105 ºF (<-76 ºC)

1/ Crosshead speed -2 in./minute

The temporary plastic ramps shall be installed according to the manufacturer's specifications and fastened with anchors meeting the manufacturer's recommendations. Temporary plastic ramps that fail to stay in place or create a traffic hazard shall be replaced immediately with temporary HMA ramps at the Contractor's expense."

80366

COMPENSABLE DELAY COSTS (BDE)

Effective: June 2, 2017

Revise Article 107.40(b) of the Standard Specifications to read:

"(b) Compensation. Compensation will not be allowed for delays, inconveniences, or damages sustained by the Contractor from conflicts with facilities not meeting the above definition; or if a conflict with a utility in an unanticipated location does not cause a shutdown of the work or a documentable reduction in the rate of progress exceeding the limits set herein. The provisions of Article 104.03 notwithstanding, compensation for delays caused by a utility in an unanticipated location will be paid according to the provisions of this Article governing minor and major delays or reduced rate of production which are defined as follows.

(1) Minor Delay. A minor delay occurs when the work in conflict with the utility in an unanticipated location is completely stopped for more than two hours, but not to exceed two weeks.

(2) Major Delay. A major delay occurs when the work in conflict with the utility in an unanticipated location is completely stopped for more than two weeks.

(3) Reduced Rate of Production Delay. A reduced rate of production delay occurs when the rate of production on the work in conflict with the utility in an unanticipated location decreases by more than 25 percent and lasts longer than seven calendar days."

Revise Article 107.40(c) of the Standard Specifications to read:

"(c) Payment. Payment for Minor, Major, and Reduced Rate of Production Delays will be made as follows.

(1) Minor Delay. Labor idled which cannot be used on other work will be paid for according to Article 109.04(b)(1) and (2) for the time between start of the delay and the minimum remaining hours in the work shift required by the prevailing practice in the area.

Equipment idled which cannot be used on other work, and which is authorized to standby on the project site by the Engineer, will be paid for according to Article 109.04(b)(4).

(2) Major Delay. Labor will be the same as for a minor delay.

Equipment will be the same as for a minor delay, except Contractor-owned equipment will be limited to two weeks plus the cost of move-out to either the Contractor's yard or another job and the cost to re-mobilize, whichever is less.

Rental equipment may be paid for longer than two weeks provided the Contractor presents adequate support to the Department (including lease agreement) to show retaining equipment on the job is the most economical course to follow and in the public interest.

(3) Reduced Rate of Production Delay. The Contractor will be compensated for the reduced productivity for labor and equipment time in excess of the 25 percent threshold for that portion of the delay in excess of seven calendar days. Determination of compensation will be in accordance with Article 104.02, except labor and material additives will not be permitted.

Payment for escalated material costs, escalated labor costs, extended project overhead, and extended traffic control will be determined according to Article 109.13."

Revise Article 108.04(b) of the Standard Specifications to read:

"(b) No working day will be charged under the following conditions.

(1) When adverse weather prevents work on the controlling item.

(2) When job conditions due to recent weather prevent work on the controlling item.

(3) When conduct or lack of conduct by the Department or its consultants, representatives, officers, agents, or employees; delay by the Department in making the site available; or delay in furnishing any items required to be furnished to the Contractor by the Department prevents work on the controlling item.

(4) When delays caused by utility or railroad adjustments prevent work on the controlling item.

(5) When strikes, lock-outs, extraordinary delays in transportation, or inability to procure critical materials prevent work on the controlling item, as long as these delays are not due to any fault of the Contractor.

(6) When any condition over which the Contractor has no control prevents work on the controlling item."

Revise Article 109.09(f) of the Standard Specifications to read:

"(f) Basis of Payment. After resolution of a claim in favor of the Contractor, any adjustment in time required for the work will be made according to Section 108. Any adjustment in the costs to be paid will be made for direct labor, direct materials, direct equipment, direct jobsite overhead, direct offsite overhead, and other direct costs allowed by the resolution. Adjustments in costs will not be made for interest charges, loss of anticipated profit, undocumented loss of efficiency, home office overhead and unabsorbed overhead

other than as allowed by Article 109.13, lost opportunity, preparation of claim expenses and other consequential indirect costs regardless of method of calculation.

The above Basis of Payment is an essential element of the contract and the claim cost recovery of the Contractor shall be so limited."

Add the following to Section 109 of the Standard Specifications.

"109.13 Payment for Contract Delay. Compensation for escalated material costs, escalated labor costs, extended project overhead, and extended traffic control will be allowed when such costs result from a delay meeting the criteria in the following table.

Contract Type	Cause of Delay	Length of Delay
Working Days	Article 108.04(b)(3) or Article 108.04(b)(4)	No working days have been charged for two consecutive weeks.
Completion Date	Article 108.08(b)(1) or Article 108.08(b)(7)	The Contractor has been granted a minimum two week extension of contract time, according to Article 108.08.

Payment for each of the various costs will be according to the following.

(a) Escalated Material and/or Labor Costs. When the delay causes work, which would have otherwise been completed, to be done after material and/or labor costs have increased, such increases will be paid. Payment for escalated material costs will be limited to the increased costs substantiated by documentation furnished by the Contractor. Payment for escalated labor costs will be limited to those items in Article 109.04(b)(1) and (2), except the 35 percent and 10 percent additives will not be permitted.

(b) Extended Project Overhead. For the duration of the delay, payment for extended project overhead will be paid as follows.

(1) Direct Jobsite and Offsite Overhead. Payment for documented direct jobsite overhead and documented direct offsite overhead, including onsite supervisory and administrative personnel, will be allowed according to the following table.

Original Contract Amount	Supervisory and Administrative
Up to $5,000,000	One Project Superintendent
Over$ 5,000,000- up to $25,000,000	One Project Manager, One Project Superintendent or Engineer, and One Clerk
Over $25,000,000- up to $50,000,000	One Project Manager, One Project Superintendent, One

	One Clerk
Over $50,000,000	One Project Manager, Two Project Superintendents, One Engineer, and

(2) Home Office and Unabsorbed Overhead. Payment for home office and unabsorbed overhead will be calculated as 8 percent of the total delay cost.

(c) Extended Traffic Control. Traffic control required for an extended period of time due to the delay will be paid. For working day contracts the payment will be made according to Article 109.04. For completion date contracts, an adjustment will be determined as follows.

Extended Traffic Control occurs between April 1 and

November 30: ETCP Adjustment ($) = TE x (%1100 x

CUP / OCT)

Extended Traffic Control occurs between December 1 and

March 31: ETCP Adjustment ($) = TE x 1.5 (%1100 x

CUP / OCT)

Where: TE =Duration of approved time extension in calendar days.

% =Percent maintenance for the traffic control, % (see table below).

CUP = Contract unit price for the traffic control pay item in place during the delay. OCT = Original contract time in calendar days.

Original Contract Amount	Percent Maintenance
Up to $2,000,000	65%
$2,000,000 to $10,000,000	75%
$10,000,000 to $20,000,000	85%
Over $20,000,000	90%

When an ETCP adjustment is paid under this prov1s1on, an adjusted unit price as provided for in Article 701.20(a) for increase or decrease in the value of work by more than ten percent will not be paid.

Upon payment for a contract delay under this prov1s1on, the Contractor shall assign subrogation rights to the Department for the Department's efforts of recovery from any other party for monies paid by the Department as a result of any claim under this provision. The Contractor shall fully cooperate with the Department in its efforts to recover from another party any money paid to the Contractor for delay damages under this provision."

80384

CONCRETE END SECTIONS FOR PIPE CULVERTS (BDE)

Effective: January 1, 2013
Revised: April 1, 2016

Description. This work shall consist of constructing cast-in-place concrete and precast concrete end sections for pipe culverts. These end sections are shown on the plans as Highway Standard 542001 or 542011. This work shall be according to Section 542 of the Standard Specifications except as modified herein.

Materials. Materials shall be according to the following Articles of Division 1000 – Materials of the Standard Specifications.

Item	Article/Section
(a) Portland Cement Concrete (Note **1)**	1020
(b) Precast Concrete End Sections (Note 2)	
(c) Coarse Aggregate (Note 3)	1004.05
(d) Structural Steel (Note 4)	1006.04
(e) Anchor Bolts and Rods (Note 5)	1006.09
(f) Reinforcement Bars	1006.10(a)
(g) Nonshrink Grout	1024.02
(h) Chemical Adhesive Resin System	1027
(i) Mastic Joint Sealer for Pipe	1055
(j) Hand Hole Plugs	1042.16

Note 1. Cast-in-place concrete end sections shall be Class Sl, except the 14 day mix design shall have a compressive strength of 5000 psi (34,500 kPa) or a flexural strength of (800 psi) 5500 kPa and a minimum cement factor of 6.65 cwt/cu yd (395 kg/cu m).

Note 2. Precast concrete end sections shall be according to Articles 1042.02 and 1042.03(b)(c)(d)(e) of the Standard Specifications. The concrete shall be Class PC according to Section 1020, and shall have a minimum compressive strength of 5000 psi (34,000 kPa) at 28 days.

Joints between precast sections shall be produced with reinforced tongue and groove ends according to the requirements of ASTM C 1577.

Note 3. The granular bedding placed below a precast concrete end section shall be gradation CA 6, CA 9, CA 10, CA 12, CA 17, CA 18, orCA 19.

Note 4. All components of the culvert tie detail shall be galvanized according to the requirements of AASHTO M 111 or M 232 as applicable.

Note 5. The anchor rods for the culvert ties shall be according to the requirements of ASTM F 1554, Grade 105 (Grade 725

CONSTRUCTION REQUIREMENTS

The concrete end sections may be precast or cast-in-place construction. Toe walls shall be either precast or cast-in-place, and shall be in proper position and backfilled according to the applicable paragraphs of Article 502.10 of the Standard Specifications prior to the installation of the concrete end sections. If soil conditions permit, cast-in-place toe walls may be poured directly against the soil. When poured directly against the soil, the clear cover of the sides and bottom of the toe wall shall be increased to 3 in. (75 mm) by increasing the thickness of the toe wall.

(a) Cast-In-Place Concrete End Sections. Cast-in-place concrete end sections shall be constructed according to the requirements of Section 503 of the Standard Specifications and as shown on the plans.

(b) Precast Concrete End Sections. When the concrete end sections will be precast, shop drawings detailing the slab thickness and reinforcement layout shall be submitted to the Engineer for review and approval.

The excavation and backfilling for precast concrete end sections shall be according to the requirements of Section 502 of the Standard Specifications, except a layer of granular bedding at least 6 in. (150 mm) in thickness shall be placed below the elevation of the bottom of the end section. The granular bedding shall extend a minimum of 2 ft (600 mm) beyond each side of the end section.

Anchor rods connecting precast sections shall be brought to a snug tight condition followed by an additional 2/3 turn on one of the nuts. Match marks shall be provided on the bolt and nut to verify relative rotation between the bolt and the nut.

When individual, precast end sections are placed side-by-side for a multi-pipe culvert installation, a 3 in. (75 rnm) space shall be left between adjacent end section walls and the space(s) filled with Class SI concrete.

Method of Measurement. This work will be measured for payment as each, with each end of each culvert being one each.

Basis of Payment. This work will be paid for at the contract unit price per each for CONCRETE END SECTION, STANDARD 542001 or CONCRETE END SECTION, 542011, of the pipe diameter and slope specified.

80311

CONSTRUCTION AIR QUALITY – DIESEL RETROFIT (BDE)

Effective: June 1, 2010
Revised: November 1, 2014

The reduction of emissions of particulate matter (PM) for off-road equipment shall be accomplished by installing retrofit emission control devices. The term "equipment" refers to diesel fuel powered devices rated at 50 hp and above, to be used on the jobsite in excess of seven calendar days over the course of the construction period on the jobsite (including rental equipment).

Contractor and subcontractor diesel powered off-road equipment assigned to the contract shall be retrofitted using the phased in approach shown below. Equipment that is of a model year older than the year given for that equipment's respective horsepower range shall be retrofitted:

Effective Dates	Horsepower Range	Model Year
June 1, 2010 1/	600-749	2002
	750 and up	2006
June 1, 2011 2/	100-299	2003
	300-599	2001
	600-749	2002
	750 and up	2006
June 1, 2012 2/	50-99	2004
	100-299	2003
	300-599	2001
	600-749	2002
	750 and up	2006

1/ Effective dates apply to Contractor diesel powered off-road equipment assigned to the contract.

2/ Effective dates apply to Contractor and subcontractor diesel powered off-road equipment assigned to the contract.

The retrofit emission control devices shall achieve a minimum PM emission reduction of 50 percent and shall be:

a) Included on the U.S. Environmental Protection Agency (USEPA) *Verified Retrofit Technology List* (http://www.epa.gov/cleandiesel/verification/verif-list.htm), or verified by the California Air Resources Board (CARB) (http://www.arb.ca.gov/diesel/verdev/vt/cvt.htm); or

b) Retrofitted with a non-verified diesel retrofit emission control device if verified retrofit emission control devices are not available for equipment proposed to be used on the project, and if the Contractor has obtained a performance certification from the retrofit

device manufacturer that the emission control device provides a minimum PM emission reduction of 50 percent.

Note: Large cranes (Crawler mounted cranes) which are responsible for critical lift operations are exempt from installing retrofit emission control devices if such devices adversely affect equipment operation.

Diesel powered off-road equipment with engine ratings of 50 hp and above, which are unable to be retrofitted with verified emission control devices or if performance certifications are not available which will achieve a minimum 50 percent PM reduction, may be granted a waiver by the Department if documentation is provided showing good faith efforts were made by the Contractor to retrofit the equipment.

Construction shall not proceed until the Contractor submits a certified list of the diesel powered off-road equipment that will be used, and as necessary, retrofitted with emission control devices. The list(s) shall include (1) the equipment number, type, make, Contractor/rental company name; and (2) the emission control devices make, model, USEPA or CARB verification number, or performance certification from the retrofit device manufacturer. Equipment reported as fitted with emissions control devices shall be made available to the Engineer for visual inspection of the device installation, prior to being used on the jobsite.

The Contractor shall submit an updated list of retrofitted off-road construction equipment as retrofitted equipment changes or comes on to the jobsite. The addition or deletion of any diesel powered equipment shall be included on the updated list.

If any diesel powered off-road equipment is found to be in non-compliance with any portion of this special provision, the Engineer will issue the Contractor a diesel retrofit deficiency deduction.

Any costs associated with retrofitting any diesel powered off-road equipment with emission control devices shall be considered as included in the contract unit prices bid for the various items of work involved and no additional compensation will be allowed. The Contractor's compliance with this notice and any associated regulations shall not be grounds for a claim.

Diesel Retrofit Deficiency Deduction

When the Engineer determines that a diesel retrofit deficiency exists, a daily monetary deduction will be imposed for each calendar day or fraction thereof the deficiency continues to exist. The calendar day(s) will begin when the time period for correction is exceeded and end with the Engineer's written acceptance of the correction. The daily monetary deduction will be $1,000.00 for each deficiency identified.

The deficiency will be based on lack of diesel retrofit emissions control.

If a Contractor accumulates three diesel retrofit deficiency deductions for the same piece of equipment in a contract period, the Contractor will be shutdown until the deficiency is corrected.

Such a shutdown will not be grounds for any extension of the contract time, waiver of penalties, or be grounds for any claim.

80261

EQUIPMENT PARKING AND STORAGE (BDE)

Effective: November 1, 2017

Replace the first paragraph of Article 701.11 of the Standard Specifications with the following.

"**701.11 Equipment Parking and Storage.** During working hours, all vehicles and/or nonoperating equipment which are parked, two hours or less, shall be parked at least 8 ft (2.5 m) from the open traffic lane. For other periods of time during working and for all nonworking hours, all vehicles, materials, and equipment shall be parked or stored as follows.

(a) When the project has adequate right-of-way, vehicles, materials, and equipment shall be located a minimum of 30 ft (9 m) from the pavement.

(b) When adequate right-of-way does not exist, vehicles, materials, and equipment shall be located a minimum of 15 ft (4.5 m) from the edge of any pavement open to traffic.

(c) Behind temporary concrete barrier, vehicles, materials, and equipment shall be located a minimum of 24 in. (600 mm) behind free standing barrier or a minimum of 6 in. (150 mm) behind barrier that is either pinned or restrained according to Article 704.04. The 24 in. or 6 in. measurement shall be from the base of the non-traffic side of the barrier.

(d) Behind other man-made or natural barriers meeting the approval of the Engineer."

80388

HOT-MIX ASPHALT - DENSITY TESTING OF LONGITUDINAL JOINTS (BDE)

Effective: January 1, 2010
Revised: April 1, 2016

Description. This work shall consist of testing the density of longitudinal joints as part of the quality control/quality assurance (QC/QA) of hot-mix asphalt (HMA). Work shall be according to Section 1030 of the Standard Specifications except as follows.

Quality Control/Quality Assurance (QC/QA). Delete the second and third sentence of the third paragraph of Article 1030.05(d)(3) of the Standard Specifications.

Add the following paragraphs to the end of Article 1030.05(d)(3) of the Standard Specifications:

"Longitudinal joint density testing shall be performed at each random density test location. Longitudinal joint testing shall be located at a distance equal to the lift thickness or a minimum of 4 in. (100 mm), from each pavement edge. (i.e. for a 5 in. (125 mm) lift the near edge of the density gauge or core barrel shall be within 5 in. (125 mm) from the edge of pavement.) Longitudinal joint density testing shall be performed using either a correlated nuclear gauge or cores.

a. Confined Edge. Each confined edge density shall be represented by a one-minute nuclear density reading or a core density and shall be included in the average of density readings or core densities taken across the mat which represents the Individual Test.

b. Unconfined Edge. Each unconfined edge joint density shall be represented by an average of three one-minute density readings or a single core density at the given density test location and shall meet the density requirements specified herein. The three one-minute readings shall be spaced 10 ft (3 m) apart longitudinally along the unconfined pavement edge and centered at the random density test location."

Revise the Density Control Limits table in Article 1030.05(d)(4) of the Standard Specifications to read:

"Mixture Composition	Parameter	Individual Test (includes confined edqes)	Unconfined Edge Joint Density Minimum
IL-4.75	Ndesiqn- 50	93.0- 97.4% [1].	91.0%
IL-9.5	Ndesign- 90	92.0-96.0%	90.0%
IL-9.5,1L-9.5L	Ndesign < 90	92.5-97.4%	90.0%
IL-19.0	Ndesign- 90	93.0-96.0%	90.0%
IL-19.0, IL-19.0L	Ndesiqn < 90	93.0 "– 97.4%	90.0%
SMA	Ndesign – 50 & 80	93.5-97.4%	91.0%"

80246

HOT-MIX ASPHALT – TACK COAT (BDE)

Effective: November 1, 2016

Revise Article 1032.06(a) of the Standard Specifications to read:

"(a) Anionic Emulsified Asphalt. Anionic emulsified asphalts shall be according to AASHTO M 140. SS-1h emulsions used as a tack coat shall have the cement mixing test waived."

80376

LIGHTS ON BARRICADES (BDE)

Effective: January 1, 2018

Revise Article 701.16 of the Standard Specifications to read:

"**701.16 Lights.** Lights shall be used on devices as required in the plans, the traffic control plan, and the following table.

Circumstance	Lights Required
Daylight operations	None
First two warning signs on each approach to the work involving a nighttime lane closure and "ROUGH GROOVED SURFACE" (W8-I107) signs	Flashing mono-directional lights
Devices delineating isolated obstacles, excavations, or hazards at night (Does not apply to patching)	Flashing bi-directional lights
Devices delineating obstacles, excavations, or hazards exceeding 100 ft (30 m) in length at night (Does not apply to widening)	Steady burn bi-directional lights
Channelizing devices for nighttime lane closures on two-lane roads	None
Channelizing devices for nighttime lane closures on multi-lane roads	None
Channelizing devices for nighttime lane closures on multi-lane roads separating opposing directions of traffic	None
Channelizing devices for nighttime along lane shifts on multilane roads	Steady burn mono-directional lights
Channelizing devices for night time along lane shifts on two lane roads	Steady burn bi-directional lights
Devices in nighttime lane closure tapers on Standards 701316 and 701321	Steady burn bi-directional lights
Devices in nighttime lane closure tapers	Steady burn mono-directional lights
Devices delineating a widening trench	None
Devices delineating patches at night on roadways with an ADT less than 25,000	None
Devices delineating patches at night on roadways with an ADT of 25,000 or more	None

Batteries for the lights shall be replaced on a group basis at such times as may be specified by the Engineer."

Delete the fourth sentence of the first paragraph of Article 701.17(c)(2) of the Standard Specifications.

Revise the first paragraph of Article 603.07 of the Standard Specifications to read:

"**603.07 Protection Under Traffic.** After the casting has been adjusted and Class SI concrete has been placed, the work shall be protected by a barricade for at least 72 hours."

80392

PAVEMENT MARKING REMOVAL (BDE)

Effective: July 1, 2016

Revise Article 783.02 of the Standard Specifications to read:

"**783.02 Equipment.** Equipment shall be according to the following.

Item	Article/Section
(a) Grinders (Note 1)	
(b) Water Blaster with Vacuum Recovery	1101.12

Note 1. Grinding equipment shall be approved by the Engineer."

Revise the first paragraph of Article 783.03 of the Standard Specifications to read:

"**783.03 Removal of Conflicting Markings.** Existing pavement markings that conflict with revised traffic patterns shall be removed. If darkness or inclement weather prohibits the removal operations, such operations shall be resumed the next morning or when weather permits. In the event of removal equipment failure, such equipment shall be repaired, replaced, or leased so removal operations can be resumed within 24 hours."

Revise the first and second sentences of the first paragraph of Article 783.03(a) of the Standard Specifications to read:

"The existing pavement markings shall be removed by the method specified and in a manner that does not materially damage the surface or texture of the pavement or surfacing. Small particles of tightly adhering existing markings may remain in place, if in the opinion of the Engineer, complete removal of the small particles will result in pavement surface damage."

Revise the first paragraph of Article 783.04 of the Standard Specifications to read:

"**783.04 Cleaning.** The roadway surface shall be cleaned of debris or any other deleterious material by the use of compressed air or water blast."

Revise the first paragraph of Article 783.06 of the Standard Specifications to read:

"**783.06 Basis of Payment.** This work will be paid for at the contract unit price per each for RAISED REFLECTIVE PAVEMENT MARKER REMOVAL, or at the contract unit price per square foot (square meter) for PAVEMENT MARKING REMOVAL – GRINDING and/or PAVEMENT MARKING REMOVAL – WATER BLASTING."

Delete Article 1101.13 from the Standard Specifications.

80371

PAYMENTS TO SUBCONTRACTORS (BDE)

Effective: November 2, 2017

Add the following to the end of the fourth paragraph of Article 109.11 of the Standard Specifications:

"If reasonable cause is asserted, written notice shall be provided to the applicable subcontractor and/or material supplier and the Engineer within five days of the Contractor receiving payment. The written notice shall identify the contract number, the subcontract or material purchase agreement, a detailed reason for refusal, the value of payment being withheld, and the specific remedial actions required of the subcontractor and/or material supplier so that payment can be made."

80390

PORTABLE CHANGEABLE MESSAGE SIGNS (BDE)

Effective: November 1, 2016
Revised: April1, 2017

Revise the second paragraph of Article 701.20(h) of the Standard Specifications to read:

"For all other portable changeable message signs, this work will be paid for at the contract unit price per calendar day for each sign as CHANGEABLE MESSAGE SIGN."

Revise this second sentence of the first paragraph of Article 1106.02(i) of the Standard Specifications to read:

"The message panel shall be a minimum of 7ft (2.1 m) above the edge of pavement in urban areas and a minimum of 5 ft (1.5 m) above the edge of pavement in rural areas, present a level appearance, and be capable of displaying up to eight characters in each of three lines at a time."

80377

PORTLAND CEMENT CONCRETE BRIDGE DECK CURING (BDE)

Effective: April 1, 2015
Revised: November 1, 2017

Revise the following two entries in the table in Article 1020.13 of the Standard Specifications to read:

"INDEX TABLE OF CURING AND PROTECTION OF CONCRETE CONSTRUCTION			
TYPE OF CONSTRUCTION	CURING METHODS	CURING PERIOD DAYS	LOW AIR TEMPERATURE PROTECTION METHODS
Superstructure (Approach Slab)	1020.13(a)(5)(6) 19/	3	1020.13(d)(1)(2) 17/
Deck	1020.13(a)(5)(6) 19/	7	1020.13(d)(1)(2) 17/

Add the following footnote to the end of the Index Table of Curing and Protection of Concrete Construction in Article 1020.13 of the Standard Specifications:

"19/ The cellulose polyethylene or synthetic fiber with polymer polyethylene blanket method shall not be used on latex modified concrete."

Revise Article 1020.13(a)(5) of the Standard Specifications to read:

"(5) Wetted Cotton Mat Method. After the surface of concrete has been textured or finished, it shall be covered immediately with dry or damp cotton mats. Cotton mats in poor condition will not be allowed. The cotton mats shall be placed in a manner which will not create indentations greater than 1/4 in. (6 mm) in the concrete surface. Minor marring of the surface is tolerable and is secondary to the importance of timely curing. The cotton mats shall then be wetted immediately and thoroughly soaked with a gentle spray of water. Thereafter, the cotton mats shall be covered with white polyethylene sheeting or burlap-polyethylene blankets. The cotton mats shall be kept saturated with water.

a. Bridge Decks. For bridge decks, a foot bridge shall be used to place and wet the cotton mats. The cotton mats shall be maintained in a wetted condition until the concrete has hardened sufficiently to place soaker hoses without indentations to the concrete surface. The soaker hoses shall be placed on top of the cotton mats at a maximum 4 ft (1.2 m) spacing. The cotton mats shall be kept wet with a continuous supply of water for the remainder of the curing period. Other continuous wetting systems may be used if approved by the Engineer.

For areas inaccessible to the cotton mats, curing shall be according to Article 1020.13(a)(3)."

Add the following to Article 1020.13(a) of the Standard Specifications.

"(6) Cellulose Polyethylene Blanket Method and Synthetic Fiber with Polymer Polyethylene Blanket Method. After the surface of concrete has been textured or finished, it shall be covered immediately with a cellulose polyethylene or synthetic fiber with polymer polyethylene blanket. Damaged blankets will not be allowed. The blankets shall be installed with the white perforated polyethylene side facing up. Adjoining blankets shall overlap a minimum of 8 in. (200 mm). Any air bubbles trapped during placement shall be removed. The blankets fiber side shall be wetted immediately prior to placement or as the blanket is being placed, and the polyethylene side shall be thoroughly soaked with a gentle spray of water immediately after placement. Thereafter, the blankets shall be kept saturated with water. For bridge decks, the blankets shall be placed and kept wet according to Article 1020.13(a)(5)a."

Revise the first paragraph of Article 1022.03 of the Standard Specifications to read:

"**1022.03 Waterproof Paper Blankets, White Polyethylene Sheeting, Burlap-Polyethylene Blankets, Cellulose Polyethylene Blankets, and Synthetic Fiber with Polymer Polyethylene Blankets.** These materials shall be white and according to ASTM C 171.

The cellulose polyethylene blanket shall consist of a perforated white polyethylene sheeting with cellulose fiber backing and shall be limited to single use only. The cellulose polyethylene blankets shall be delivered to the jobsite unused and in the manufacturer's unopened packaging until ready for installation. Each roll shall be clearly labeled with product name, manufacturer, and manufacturer's certification of compliance with ASTM C 171.

The synthetic fiber with polymer polyethylene blanket shall consist of a perforated white polyethylene sheeting with absorbent synthetic fibers and super absorbent polymer backing, and shall be limited to single use only. The synthetic fiber with polymer polyethylene blankets shall be delivered to the jobsite unused and in the manufacturer's unopened packaging until ready for installation. Each roll shall be clearly labeled on the product with product name, manufacturer, and manufacturer's certification of compliance with ASTM C 171."

803

PORTLAND CEMENT CONCRETE (BDE)

Effective: November 1, 2017

Revise the Air Content % of Class PP Concrete in Table 1 Classes of Concrete and Mix Design Criteria in Article 1020.04 of the Standard Specifications to read:

"TABLE 1. CLASSES OF CONCRETE AND MIX DESIGN CRITERIA		
Class of Conc.	Use	Air Content %
PP	Pavement Patching Bridge Deck Patching (10)	
	PP-1	4.0 - 8.0"
	PP-2	
	PP-3	
	PP-4	
	PP-5	

Revise Note (4) at the end of Table 1 Classes of Concrete and Mix Design Criteria in Article 1020.04 of the Standard Specifications to read:

"(4) For all classes of concrete, the maximum slump may be increased to 7 in (175 mm) when a high range water-reducing admixture is used. For Class SC, the maximum slump may be increased to 8 in. (200 mm). For Class PS, the maximum slump may be increased to 8 1/2 in. (215 mm) if the high range water-reducing admixture is the polycarboxylate type."

80389

SUBCONTRACTOR MOBILILATION PAYMENTS (BDE)

Effective: November 2, 2017

Replace the second paragraph of Article 109.12 of the Standard Specifications with the following:

"This mobilization payment shall be made at least 14 days prior to the subcontractor starting work. The amount paid shall be at the following percentage of the amount of the subcontract reported on form BC 260A submitted for the approval of the subcontractor's work.

Value of Subcontract Reported on Form BC 260A	Mobilization Percentage
Less than $10,000	25%
$10,000 to less than $20,000	20%
$20,000 to less than $40,000	18%
$40,000 to less than $60,000	16%
$60,000 to less than $80,000	14%
$80,000 to less than $100,000	12%
$100,000 to less than $250,000	10%
$250,000 to less than $500,000	9%
$500,000 to $750,000	8%
Over $750,000	7%"

80391

TEMPORARY PAVEMENT MARKING (BDE)

Effective: April 1, 2012
Revised: April 1, 2017

Revise Article 703.02 of the Standard Specifications to read:

"703.02 Materials. Materials shall be according to the following.

(a) Pavement Marking Tape, Type I and Type III 1095.06
(b) Paint Pavement Markings 1095.02
(c) Pavement Marking Tape, Type IV ..... 1095.11"

Revise the second paragraph of Article 703.05 of the Standard Specifications to read:

"Type I marking tape or paint shall be used at the option of the Contractor, except paint shall not be applied to the final wearing surface unless authorized by the Engineer for late season applications where tape adhesion would be a problem. Type III or Type IV marking tape shall be used on the final wearing surface when the temporary pavement marking will conflict with the permanent pavement marking such as on tapers, crossovers and lane shifts."

Revise Article 703.07 of the Standard Specifications to read:

"703.07 Basis of Payment. This work will be paid for as follows.

a) Short Term Pavement Marking. Short term pavement marking will be paid for at the contract unit price per foot (meter) for SHORT TERM PAVEMENT MARKING. Removal of short term pavement markings will be paid for at the contract unit price per square foot (square meter) for SHORT TERM PAVEMENT MARKING REMOVAL.

b) Temporary Pavement Marking. Where the Contractor has the option of material type, temporary pavement marking will be paid for at the contract unit price per foot (meter) for TEMPORARY PAVEMENT MARKING of the line width specified, and at the contract unit price per square foot (square meter) for TEMPORARY PAVEMENT MARKING LETTERS AND SYMBOLS.

Where the Department specifies the use of pavement marking tape, the Type III or Type IV temporary pavement marking will be paid for at the contract unit price per foot (meter) for PAVEMENT MARKING TAPE, TYPE III or PAVEMENT MARKING TAPE, TYPE IV of the line width specified and at the contract unit price per square feet (square meter) for PAVEMENT MARKING TAPE, TYPE III- LETTERS AND SYMBOLS or PAVEMENT MARKING TAPE, TYPE IV- LETTERS AND SYMBOLS.

Removal of temporary pavement markings will be paid for at the contract unit price per square foot (square meter) for TEMPORARY PAVEMENT MARKING REMOVAL.

When temporary pavement marking is shown on the Standard, the cost of the temporary pavement marking and its removal will be included in the cost of the Standard."

Add the following to Section 1095 of the Standard Specifications:

"1095.11 Pavement Marking Tape, Type IV. The temporary, preformed, patterned markings shall consist of a white or yellow tape with wet retroreflective media incorporated to provide immediate and continuing retroreflection during both wet and dry conditions. The tape shall be manufactured without the use of heavy metals including lead chromate pigments or other similar, lead-containing chemicals.

The white and yellow Type IV marking tape shall meet the Type III requirements of Article 1095.06 and the following.

(a) Composition. The retroreflective pliant polymer pavement markings shall consist of a mixture of high-quality polymeric materials, pigments and glass beads distributed throughout its base cross-sectional area, with a layer of wet retroreflective media bonded to a durable polyurethane topcoat surface. The patterned surface shall have approximately 40% ± 10% of the surface area raised and presenting a near vertical face to traffic from any direction. The channels between the raised areas shall be substantially free of exposed beads or particles.

(b) Retroreflectance. The white and yellow markings shall meet the following for initial dry and wet retroreflectance.

(1) Dry Retroreflectance. Dry retroreflectance shall be measured under dry conditions according to ASTM D 4061 and meet the values described in Article 1095.06 for Type III tape.

(2) Wet Retroreflectance. Wet retroreflectance shall be measured under wet conditions according to ASTM E 2177 and meet the values shown in the following table.

Wet Retroreflectance, Initial RL

Color	RL 1.05/88.76
White	300
Yellow	200

(c) Color. The material shall meet the following requirements for daylight reflectance and color, when tested, using a color spectrophotometer with 45 degrees circumferential/zero degree geometry, illuminant D65, and a two degree observer angle. The color instrument shall measure the visible spectrum from 380 to 720 nm with a wavelength measurement interval and spectral bandpass of 10 nm.

Color	Daylight Reflectance
White	65 minimum
*Yellow	36-59

*Shall match Federal 595 Color No. 33538 and the chromaticity limits as follows.

x	0.490	0.475	0.485	0.530
y	0.470	0.438	0.425	0.456

(d) Skid Resistance. The surface of the markings shall provide an average minimum skid resistance of 50 BPN when tested according to ASTM E 303.

(e) Sampling, Testing, Acceptance, and Certification. Prior to approval and use of the wet reflective, temporary, removable pavement marking tape, the manufacturer shall submit a notarized certification from an independent laboratory, together with the results of all tests, stating that the material meets the requirements as set forth herein. The certification test report shall state the lot tested, manufacturer's name, and date of manufacture.

After approval by the Department, samples and certification by the manufacturer shall be submitted for each batch used. The manufacturer shall submit a certification stating that the material meets the requirements as set forth herein and is essentially identical to the material sent for qualification. The certification shall state the lot tested, manufacturer's name, and date of manufacture.

All costs of testing (other than tests conducted by the Department) shall be bome by the manufacturer."

80298

TRAINING SPECIAL PROVISIONS (BDE)

This Training Special Provision supersedes Section 7b of the Special Provision entitled "Specific Equal Employment Opportunity Responsibilities," and is in implementation of 23 U.S.C. 140(a).

As part of the contractor's equal employment opportunity affirmative action program, training shall be provided as follows:

The contractor shall provide on-the-job training aimed at developing full journeyman in the type of trade or job classification involved. The number of trainees to be trained under this contract will be . In the event the contractor subcontracts a portion of the contract work, he shall determine how many, if any, of the trainees are to be trained by the subcontractor, provided however, that the contractor shall retain the primary responsibility for meeting the training requirements imposed by this special provision. The contractor shall also insure that this Training Special Provision is made applicable to such subcontract. Where feasible, 25 percent of apprentices or trainees in each occupation shall be in their first year of apprenticeship or training.

The number of trainees shall be distributed among the work classifications on the basis of the contractor's needs and the availability of journeymen in the various classifications within the reasonable area of recruitment. Prior to commencing construction, the contractor shall submit to the Illinois Department of Transportation for approval the number of trainees to be trained in each selected classification and training program to be used. Furthermore, the contractor shall specify the starting time for training in each of the classifications. The contractor will be credited for each trainee employed by him on the contract work who is currently enrolled or becomes enrolled in an approved program and will be reimbursed for such trainees as provided hereinafter.

Training and upgrading of minorities and women toward journeyman status is a primary objective of this Training Special Provision. Accordingly, the contractor shall make every effort to enroll minority trainees and women (e.g. by conducting systematic and direct recruitment through public and private sources likely to yield minority and women trainees) to the extent such persons are available within a reasonable area of recruitment. The contractor will be responsible for demonstrating the steps that he has taken in pursuance thereof, prior to a determination as to whether the contractor is in compliance with this Training Special Provision. This training commitment is not intended, and shall not be used, to discriminate against any applicant for training, whether a member of a minority group or not.

No employee shall be employed as a trainee in any classification in which he has successfully completed a training course leading to journeyman status or in which he has been employed as a journeyman. The contractor should satisfy this requirement by including appropriate questions in the employee application or by other suitable means. Regardless of the method used the contractor's records should document the findings in each case.

The minimum length and type of training for each classification will be as established in the training program selected by the contractor and approved by the Illinois Department of Transportation and the Federal Highway Administration. The Illinois Department of Transportation and the Federal Highway Administration shall approve a program, if it is reasonably calculated to meet the equal employment opportunity obligations of the contractor and to qualify the average trainee for journeyman status in the classification concerned by the end of the training period. Furthermore, apprenticeship programs registered with the U.S. Department of Labor, Bureau of Apprenticeship and Training, or with a State apprenticeship agency recognized by the Bureau and training programs approved by not necessarily sponsored by the U.S. Department of Labor, Manpower Administration, Bureau of Apprenticeship and Training shall also be considered acceptable provided it is being administered in a manner consistent with the equal employment obligations of Federal-aid highway construction contracts. Approval or acceptance of a training program shall be obtained from the State prior to commencing work on the classification covered by the program. It is the intention of these provisions that training is to be provided in the construction crafts rather then clerk-typists or secretarial-type positions. Training is permissible in lower level management positions such as office engineers, estimators, timekeepers, etc., where the training is oriented toward construction applications. Training in the laborer classification may be permitted provided that significant and meaningful training is provided and approved by the Illinois Department of Transportation and the Federal Highway Administration. Some offsite training is permissible as long as the training is an integral part of an approved training program and does not comprise a significant part of the overall training.

Except as otherwise noted below, the contractor will be reimbursed 80 cents per hour of training given an employee on this contract in accordance with an approved training program. As approved by the Engineer, reimbursement will be made for training of persons in excess of the number specified herein. This reimbursement will be made even though the contractor receives additional training program funds from other sources, provided such other source does not specifically prohibit the contractor from receiving other reimbursement. Reimbursement for offsite training indicated above may only be made to the contractor where he does one or more of the following and the trainees are concurrently employed on a Federal-aid project; contributes to the cost of the training, provides the instruction to the trainee or pays the trainee's wages during the offsite training period.

No payment shall be made to the contractor if either the failure to provide the required training, or the failure to hire the trainee as a journeyman, is caused by the contractor and evidences a lack of good faith on the part of the contractor in meeting the requirement of this Training Special Provision. It is normally expected that a trainee will begin his training on the project as soon as feasible after start of work utilizing the skill involved and remain on the project as long as training opportunities exist in his work classification or until he has completed his training program.

It is not required that all trainees be on board for the entire length of the contract. A contractor will have fulfilled his responsibilities under this Training Special Provision if he has provided acceptable training to the number of trainees specified. The number trained shall be determined on the basis of the total number enrolled on the contract for a significant period.

Trainees will be paid at least 60 percent of the appropriate minimum journeyman's rate specified in the contract for the first half of the training period, 75 percent for the third quarter of the training period, and 90 percent for the last quarter of the training period, unless apprentices or trainees in an approved existing program are enrolled as trainees on this project. In that case, the appropriate rates approved by the Departments of Labor or Transportation in connection with the existing program shall apply to all trainees being trained for the same classification who are covered by this Training Special Provision.

The contractor shall furnish the trainee a copy of the program he will follow in providing the training. The contractor shall provide each trainee with a certification showing the type and length of training satisfactorily complete.

The contractor will provide for the maintenance of records and furnish periodic reports documenting his performance under this Training Special Provision.

METHOD OF MEASUREMENT The unit of measurement is in hours.

BASIS OF PAYMENT This work will be paid for at the contract unit price of 80 cents per hour for TRAINEES. The estimated total number of hours, unit price and total price have been included in the schedule of prices.

20338

WEEKLY DBE TRUCKING REPORTS (BDE)

Effective: June 2, 2012
Revised: April 2, 2015

The Contractor shall submit a weekly report of Disadvantaged Business Enterprise (DBE) trucks hired by the Contractor or subcontractors (i.e. not owned by the Contractor or subcontractors) that are used for DBE goal credit.

The report shall be submitted to the Engineer on Department form "SBE 723" within ten business days following the reporting period. The reporting period shall be Monday through Sunday for each week reportable trucking activities occur.

Any costs associated with providing weekly DBE trucking reports shall be considered as included in the contract unit prices bid for the various items of work involved and no additional compensation will be allowed.

80302

WARM MIX ASPHALT (BDE)

Effective: January 1, 2012
Revised: April1, 2016

Description. This work shall consist of designing, producing and constructing Warm Mix Asphalt (WMA) in lieu of Hot Mix Asphalt (HMA) at the Contractor's option. Work shall be according to Sections 406, 407, 408, 1030, and 1102 of the Standard Specifications, except as modified herein. In addition, any references to HMA in the Standard Specifications, or the special provisions shall be construed to include WMA.

WMA is an asphalt mixture which can be produced at temperatures lower than allowed for HMA utilizing approved WMA technologies. WMA technologies are defined as the use of additives or processes which allow a reduction in the temperatures at which HMA mixes are produced and placed. WMA is produced by the use of additives, a water foaming process, or combination of both. Additives include minerals, chemicals or organics incorporated into the asphalt binder stream in a dedicated delivery system. The process of foaming injects water into the asphalt binder stream, just prior to incorporation of the asphalt binder with the aggregate.

Approved WMA technologies may also be used in HMA provided all the requirements specified herein, with the exception of temperature, are met. However, asphalt mixtures produced at temperatures in excess of 275 oF (135 oc) will not be considered WMA when determining the grade reduction of the virgin asphalt binder grade.

Equipment.

Revise the first paragraph of Article 1102.01 of the Standard Specifications to read:

"1102.01 Hot-Mix Asphalt Plant. The hot-mix asphalt (HMA) plant shall be the batch-type, continuous-type, or dryer drum plant. The plants shall be evaluated for prequalification rating and approval to produce HMA according to the current Bureau of Materials and Physical Research Policy Memorandum, "Approval of Hot-Mix Asphalt Plants and Equipment". Once approved, the Contractor shall notify the Bureau of Materials and Physical Research to obtain approval of all plant modifications. The plants shall not be used to produce mixtures concurrently for more than one project or for private work unless permission is granted in writing by the Engineer. The plant units shall be so designed, coordinated and operated that they will function properly and produce HMA having uniform temperatures and compositions within the tolerances specified. The plant units shall meet the following requirements."

Add the following to Article 1102.01(a) of the Standard Specifications.

"(11) Equipment for Warm Mix Technologies.

a. Foaming. Metering equipment for foamed asphalt shall have an accuracy of ± 2 percent of the actual water metered. The foaming control system shall be electronically interfaced with the asphalt binder meter.

b. Additives. Additives shall be introduced into the plant according to the supplier's recommendations and shall be approved by the Engineer. The system for introducing the WMA additive shall be interlocked with the aggregate feed or weigh system to maintain correct proportions for all rates of production and batch sizes."

Mix Design Verification.

Add the following to Article 1030.04 of the Standard Specifications.

"(e) Warm Mix Technologies.

(1) Foaming. WMA mix design verification will not be required when foaming technology is used alone (without WMA additives). However, the foaming technology shall only be used on HMA designs previously approved by the Department.

(2) Additives. WMA mix designs utilizing additives shall be submitted to the Engineer for mix design verification."

Construction Requirements.

Revise the second paragraph of Article 406.06(b)(1) of the Standard Specifications to read:

"The HMA shall be delivered at a temperature of 250 to 350 OF (120 to 175 °C).
WMA shall be delivered at a minimum temperature of 215 OF (102 °C)."

Basis of Payment.

This work will be paid at the contract unit price bid for the HMA pay items involved. Anti-strip will not be paid for separately, but shall be considered as included in the cost of the work.

80288

Substitution of Warm Mix Asphalt for Hot Mix Asphalt (CDOT)

Effective: April 1, 2015

Revised: March 1, 2016

Description. Work under this item shall consist of designing, producing and placing Warm Mix Asphalt (WMA) in lieu of Hot Mix Asphalt (HMA). Work shall be performed according to sections 406, 1030, and 1102 of the Standard Specifications for Road and Bridge Construction and the IDOT Warm Mix Asphalt (BDE) except as herein modified.

General Requirements. The use of WMA technology shall be required for placements occurring between November 1 and May 1.

Equipment. The use of a foaming technology shall not be allowed. Warm Mix Asphalt additives shall be incorporated at the plant and according to Article 1102.01(a)(10) of the Standard Specifications.

Mix Design. Contractor shall perform a verification of their existing approved mix design with the warm mix additive incorporated at the manufacturers recommended dosage. The verification testing, at optimum AC, shall be comprised of one G_{mb} and one G_{mm} sample. The voids shall be within 0.5% of the design value. A Hamburg test (AASHTO T 324) will be required and shall be in accordance with the "HMA Mix Design Requirements (D-1)" Special Provision. One wheel shall be required; an average is acceptable. The volumetric and Hamburg results shall be submitted to the Commissioner for approval. The Commissioner reserves the right to perform their own verification testing using blended aggregate supplied by the contractor.

Construction Requirements.

Add the following paragraph to Article 1030.06(a) of the Standard Specifications:

"If a test strip has already been performed and approved on the design, used as HMA, then a new test strip shall not be required on the design used as WMA. If a nuclear correlation was performed and approved on the design, used as HMA, a new correlation shall not be required on the design used as WMA unless the Commissioner determines a new correlation is necessary."

Basis of Payment.

All costs associated with this special provision shall be considered incidental to the contract unit price of the HMA mixes involved.

CURB PAINTING

A. Curb painting is to be in accordance with applicable portions of Section 780 of the SSRBC.

   1. When directed by the Commissioner, the top and face of the curb is to be painted yellow for 15 feet each side of the fire hydrant, except where the 15 foot dimension intersects a crosswalk, driveway or similar feature.

   2. Glass beads are NOT required.

   3. Painting is to have neat straight edges along back of curb and vertically up the curb face.

Basis of Payment

All costs associated with this special provision shall be included in the cost of COMBINATION CONCRETE CURB AND GUTTER, TYPE B-V.12.

GUIDE BRIDGE SPECIAL PROVISION INDEX/CHECK SHEET

Effective as of the: January 19, 2018 Letting

√	File Name	Title	Effective	Revised
	GBSP4	Polymer Modified Portland Cement Mortar	Jun 7, 1994	Apr 1, 2016
	GBSP12	Drainage System	Jun 10, 1994	Jun 24, 2015
	GBSP13	High-Load Multi-Rotational Bearings	Oct 13, 1988	Apr 1, 2016
	GBSP14	Jack and Remove Existing Bearings	Apr 20, 1994	Jan 1, 2007
	GBSP15	Three Sided Precast Concrete Structure	Jul 12, 1994	Dec 21, 2016
	GBSP16	Jacking Existing Superstructure	Jan 11, 1993	Jan 1, 2007
	GBSP17	Bonded Preformed Joint Seal	Jul 12, 1994	Jan 1, 2007
	GBSP18	Modular Expansion Joint	May 19, 1994	Dec 29, 2014
	GBSP21	Cleaning and Painting Contact Surface Areas of Existing Steel Structures	Jun 30, 2003	May 18, 2011
	GBSP25	Cleaning and Painting Existing Steel Structures	Oct 2, 2001	Apr 22, 2016
	GBSP26	Containment and Disposal of Lead Paint Cleaning Residues	Oct 2, 2001	Apr 22, 2016
	GBSP28	Deck Slab Repair	May 15, 1995	Oct 15, 2011
	GBSP29	Bridge Deck Microsilica Concrete Overlay	May 15, 1995	Oct 20, 2017
	GBSP30	Bridge Deck Latex Concrete Overlay	May 15, 1995	Oct 20, 2017
	GBSP31	Bridge Deck High-Reactivity Metakaolin (HRM) Conc Overlay	Jan 21, 2000	Oct 20, 2017
	GBSP33	Pedestrian Truss Superstructure	Jan 13, 1998	Dec 29, 2014
	GBSP34	Concrete Wearing Surface	Jun 23, 1994	Oct 4, 2016
	GBSP35	Silicone Bridge Joint Sealer	Aug 1, 1995	Oct 15, 2011
	GBSP45	Bridge Deck Thin Polymer Overlay	May 7, 1997	Feb 6, 2013
√	GBSP51	Pipe Underdrain for Structures	May 17, 2000	Jan 22, 2010
√	GBSP53	Structural Repair of Concrete	Mar 15, 2006	Apr 1, 2016
	GBSP55	Erection of Curved Steel Structures	Jun 1, 2007	
	GBSP56	Setting Piles in Rock	Nov 14, 1996	Apr 1, 2016
	GBSP59	Diamond Grinding and Surface Testing Bridge Sections	Dec 6, 2004	Mar29, 2017
	GBSP60	Containment and Disposal of Non-Lead Paint Cleaning Residues	Nov 25, 2004	Apr 22, 2016
	GBSP61	Slipform Parapet	Jun 1, 2007	Apr 22, 2016
√	GBSP67	Structural Assessment Reports for Contractor's Means and Methods	Mar 6, 2009	Oct 5, 2015
	GBSP71	Aggregate Column Ground Improvement	Jan 15, 2009	Oct 15, 2011
	GBSP72	Bridge Deck Fly Ash or GGBF Slag Concrete Overlay	Jan 18, 2011	Oct 20, 2017
	GBSP75	Bond Breaker for Prestressed Concrete Bulb-T Beams	Apr 19, 2012	
√	GBSP77	Weep Hole Drains for Abutments, Wingwalls, Retaining Walls and Culverts	Apr 19, 2012	Oct 22, 2013
√	GBSP78	Bridge Deck Construction	Oct 22, 2013	Dec 21, 2016
	GBSP79	Bridge Deck Grooving (Longitudinal)	Dec 29, 2014	Mar 29, 2017
	GBSP81	Membrane Waterproofing for Buried Structures	Oct 4, 2016	
	GBSP82	Metallizing of Structural Steel	Oct 4, 2016	Oct 20, 2017
	GBSP83	Hot Dip Galvanizing For Structural Steel	Oct 4, 2016	Oct 20, 2017
√	GBSP85	Micropiles	Apr 19, 1996	Oct 5, 2015
	GBSP86	Drilled Shafts	Oct 5, 2015	Oct 4, 2016

	GBSP87	Lightweight Cellular Concrete Fill	Nov 11, 2001	Apr 1, 2016
	GBSP88	Corrugated Structural Plate Structures	Apr 22, 2016	
√	GBSP89	Preformed Pavement Joint Seal	Oct 4, 2016	
	GBSP90	Three Sided Precast Concrete Structure (Special)	Dec 21, 2016	Mar 29, 2017
	GBSP91	Crosshole Sonic Logging Testing of Drilled Shafts	Apr 20, 2016	
	GBSP92	Thermal Integrity Profile Testing of Drilled Shafts	Apr 20, 2016	
	GBSP93	Preformed Bridge Joint Seal	Dec 21, 2016	
	GBSP94	Warranty for Cleaning and Painting Steel Structures	Mar 3, 2000	Nov 24, 2004

LIST ADDITIONAL SPECIAL PROVISIONS BELOW

The following Guide Bridge Special Provisions have been incorporated into the 2016 Standard Specifications:

File Name	Title	Std Spec Location
GBSP32	Temporary Sheet Piling	522
GBSP38	Mechanically Stabilized Earth Retaining Walls	522
GBSP42	Drilled Soldier Pile Retaining Wall	522
GBSP43	Driven Soldier Pile Retaining Wall	522
GBSP44	Temporary Soil Retention System	522
GBSP46	Geotextile Retaining Walls	522
GBSP57	Temporary Mechanically Stabilized Earth Retaining Walls	522
GBSP62	Concrete Deck Beams	504
GBSP64	Segmental Concrete Block Wall	522
GBSP65	Precast Modular Retaining Wall	522
GBSP73	Cofferdams	2017 Supp
GBSP74	Permanent Steel Sheet Piling (LRFD)	522
GBSP76	Granular Backfill for Structures	2017 Supp
GBSP80	Fabric Reinforced Elastomeric	1028
GBSP84	Precast, Prestressed Concrete Beams	2017 Supp

The following Guide Bridge Special Provisions have been discontinued or have been superseded:

File Name	Title	Disposition:
GBSP70	Braced Excavation	Use TSRS per Sec 522
GBSP 95	Bridge Deck Concrete Sealer	Use July 1, 2012 version for Repair projects only

PIPE UNDERDRAINS FOR STRUCTURES
Effective: May 17, 2000
Revised: January 22, 2010

Description. This work shall consist of furnishing and installing a pipe underdrain system as shown on the plans, as specified herein, and as directed by the Engineer.

Materials. Materials shall meet the requirements as set forth below:

The perforated pipe underdrain shall be according to Article 601.02 of the Standard Specifications. Outlet pipes or pipes connecting to a separate storm sewer system shall not be perforated.

The drainage aggregate shall be a combination of one or more of the following gradations, FA1, FA2, CA5, CA7, CA8, CA11, or CA13 thru 16, according to Sections 1003 and 1004 of the Standard Specifications.

The fabric surrounding the drainage aggregate shall be Geotechnical Fabric for French Drains according to Article 1080.05 of the Standard Specifications.

Construction Requirements. All work shall be according to the applicable requirements of Section 601 of the Standard Specifications except as modified below.

The pipe underdrains shall consist of a perforated pipe drain situated at the bottom of an area of drainage aggregate wrapped completely in geotechnical fabric and shall be installed to the lines and gradients as shown on the plans.

Method of Measurement. Pipe Underdrains for Structures shall be measured for payment in feet (meters), in place. Measurement shall be along the centerline of the pipe underdrains. All connectors, outlet pipes, elbows, and all other miscellaneous items shall be included in the measurement. Concrete headwalls shall be included in the cost of Pipe Underdrains for Structures, but shall not be included in the measurement for payment.

Basis of Payment. This work will be paid for at the contract unit price per foot (meter) for PIPE UNDERDRAINS FOR STRUCTURES of the diameter specified. Furnishing and installation of the drainage aggregate, geotechnical fabric, forming holes in structural elements and any excavation required, will not be paid for separately, but shall be included in the cost of the pipe underdrains for structures.

STRUCTURAL REPAIR OF CONCRETE

Effective: March 15, 2006

Revised: April 1, 2016

Description. This work shall consist of structurally repairing concrete.

Materials. Materials shall be according to the following.

Item	Article/Section
(a) Portland Cement Concrete (Note 1)	1020
(b) R1 or R2 Concrete (Note 2)	
(c) Normal Weight Concrete (Notes 3 and 4)	
(d) Shotcrete (High Performance) (Notes 5 and 6)	
(e) Reinforcement Bars	1006.10
(f) Anchor Bolts	1006.09
(g) Water	1002
(h) Curing Compound	1022.01
(i) Cotton Mats	1022.02
(j) Protective Coat	1023.01
(k) Epoxy (Note 7)	1025
(l) Mechanical Bar Splicers	508.06(c)

Note 1. The concrete shall be Class SI, except the cement factor shall be a minimum 6.65 cwt/cu yd (395 kg/cu m), the coarse aggregate shall be a CA 16, and the strength shall be a minimum 4000 psi (27,500 kPa) compressive or 675 psi (4650 kPa) flexural at 14 days. A high range water-reducing admixture shall be used to obtain a 5-7 in. (125-175 mm) slump, but a cement factor reduction according to Article 1020.05(b)(8) is prohibited. A self-consolidating concrete mixture is also acceptable per Article 1020.04, except the mix design requirements of this note regarding the cement factor, coarse aggregate, strength, and cement factor reduction shall apply.

Note 2. The R1 or R2 concrete shall be from the Department's approved list of Packaged, Dry, Rapid Hardening, Cementitious Materials for Concrete Repairs. The R1 or R2 concrete shall comply with the air content and strength requirements for Class SI concrete as indicated in Note 1. Mixing shall be per the manufacturer's recommendations, except the water/cement ratio shall not exceed the value specified for Class SI concrete as indicated in Note 1. A high range water-reducing admixture shall be used to obtain a 5-7 in. (125-175 mm) slump, and a retarder may be required to allow time to perform the required field tests. The admixtures shall be per the manufacturer's recommendation, and the Department's approved list of Concrete Admixtures shall not apply.

Note 3. The "high slump" packaged concrete mixture shall be from the Department's approved list of Packaged, Dry, Formed, Concrete Repair Mixtures. The materials and preparation of aggregate shall be according to ASTM C 387. The cement

factor shall be 6.65 cwt/cu yd (395 kg/cu m) minimum to 7.05 cwt/cu yd (418 kg/cu m) maximum. Cement replacement with fly ash or ground granulated blast-furnace slag shall be according to Section 1020. The "high slump" packaged concrete mixture shall have a water soluble chloride ion content of less than 0.40 lb/cu yd (0.24 kg/cu m). The test shall be performed according to ASTM C 1218, and the "high slump" packaged concrete mixture shall have an age of 28 to 42 days at the time of test. The ASTM C 1218 test shall be performed by an independent lab a minimum of once every two years, and the test results shall be provided to the Department. The coarse aggregate shall be a maximum size of 1/2 in. (12.5 mm). The packaged concrete mixture shall comply with the air content and strength requirements for Class SI concrete as indicated in Note 1. Mixing shall be per the manufacturer's recommendations, except the water/cement ratio shall not exceed the value specified for Class SI concrete as indicated in Note 1. A high range water-reducing admixture shall be used to obtain a 5-7 in. (125-175 mm) slump. The admixture shall be per the manufacturer's recommendation, and the Department's approved list of Concrete Admixtures shall not apply. A maximum slump of 10 in. (250 mm) may be permitted if no segregation is observed by the Engineer in a laboratory or field evaluation.

Note 4 The "self-consolidating concrete" packaged concrete mixture shall be from the Department's approved list of Packaged, Dry, Formed, Concrete Repair Mixtures. The materials and preparation of aggregate shall be according to ASTM C 387. The cement factor shall be 6.65 cwt/cu yd (395 kg/cu m) minimum to 7.05 cwt/cu yd (418 kg/cu m) maximum. Cement replacement with fly ash or ground granulated blast-furnace slag shall be according to Section 1020. The "self-consolidating concrete" packaged concrete mixture shall have a water soluble chloride ion content of less than 0.40 lb/cu yd (0.24 kg/cu m). The test shall be performed according to ASTM C 1218, and the "self-consolidating concrete" packaged concrete mixture shall have an age of 28 to 42 days at the time of test. The ASTM C 1218 test shall be performed by an independent lab a minimum of once every two years, and the test results shall be provided to the Department. The concrete mixture should be uniformly graded, and the coarse aggregate shall be a maximum size of 1/2 in. (12.5 mm). The fine aggregate proportion shall be a maximum 50 percent by weight (mass) of the total aggregate used. The packaged concrete mixture shall comply with the air content and strength requirements for Class SI concrete as indicated in Note 1. Mixing shall be per the manufacturer's recommendations, except the water/cement ratio shall not exceed the value specified for Class SI concrete as indicated in Note 1. The admixtures used to produce self-consolidating concrete shall be per the manufacturer's recommendation, and the Department's approved list of Concrete Admixtures shall not apply. The packaged concrete mixture shall meet the self-consolidating requirements of Article 1020.04.

Note 5. Packaged shotcrete that includes aggregate shall be from the Department's approved list of Packaged High Performance Shotcrete, and independent

laboratory test results showing the product meets Department specifications will be required. The product shall be a packaged, pre-blended, and dry combination of materials, for the wet-mix shotcrete method according to ASTM C 1480. A non-chloride accelerator may be used according to the shotcrete manufacturer's recommendations. The shotcrete shall be Type FA or CA, Grade FR, and Class I. The fibers shall be Type III synthetic according to ASTM C 1116.

The packaged shotcrete shall have a water soluble chloride ion content of less than 0.40 lb/cu yd (0.24 kg/cu m). The test shall be performed according to ASTM C 1218, and the hardened shotcrete shall have an age of 28 to 42 days at the time of test. The ASTM C 1218 test shall be performed by an independent lab a minimum of once every two years, and the test results shall be provided to the Department.

Each individual aggregate used in the packaged shotcrete shall have either a maximum ASTM C 1260 expansion of 0.16 percent or a maximum ASTM C 1293 expansion of 0.040 percent. However, the ASTM C 1260 value may be increased to 0.27 percent for each individual aggregate if the cement total equivalent alkali content ($Na_2O + 0.658K_2O$) does not exceed 0.60 percent. As an alternative to these requirements, ASTM C 1567 testing which shows the packaged shotcrete has a maximum expansion of 0.16 percent may be submitted. The ASTM C 1260, C 1293, or C 1567 test shall be performed a minimum of once every two years.

The 7 and 28 day compressive strength requirements in ASTM C 1480 shall not apply. Instead the shotcrete shall obtain a minimum compressive strength of 4000 psi (27,500 kPa) at 14 days.

The packaged shotcrete shall be limited to the following proportions:

The portland cement and finely divided minerals shall be 6.05 cwt/cu yd (360 kg/cu m) to 8.50 cwt/cu yd (505 kg/cu m) for Type FA and 6.05 cwt/cu yd (360 kg/cu. m) to 7.50 cwt/cu yd (445 kg/cu m) for Type CA. The portland cement shall not be below 4.70 cwt/cu yd (279 kg/cu m) for Type FA or CA.

The finely divided mineral(s) shall constitute a maximum of 35 percent of the total cement plus finely divided mineral(s).

Class F fly ash is optional and the maximum shall be 20 percent by weight (mass) of cement.

Class C fly ash is optional and the maximum shall be 25 percent by weight (mass) of cement.

Ground granulated blast-furnace slag is optional and the maximum shall be 30 percent by weight (mass) of cement.

Microsilica is required and shall be a minimum of 5 percent by weight (mass) of cement, and a maximum of 10 percent. As an alternative to microsilica, high-reactivity metakaolin may be used at a minimum of 5 percent by weight (mass) of cement, and a maximum of 10 percent.

Fly ash shall not be used in combination with ground granulated blast-furnace slag. Class F fly ash shall not be used in combination with Class C fly ash. Microsilica shall not be used in combination with high-reactivity metakaolin. A finely divided mineral shall not be used in combination with a blended hydraulic cement, except for microsilica or high-reactivity metakaolin.

The water/cement ratio as defined in Article 1020.06 shall be a maximum of 0.42.

The air content as shot shall be 4.0 – 8.0 percent.

Note 6 Packaged shotcrete that does not include pre-blended aggregate shall be from the Department's approved list of Packaged High Performance Shotcrete, and independent laboratory test results showing the product meets Department specifications will be required. The shotcrete shall be according to Note 5, except the added aggregate shall be according to Articles 1003.02 and 1004.02 in addition to each individual aggregate meeting the maximum expansion requirements of Note 5. The aggregate gradation shall be according to the manufacturer. The shotcrete shall be batched and mixed with added aggregate according to the manufacturer.

Note 7. In addition ASTM C 881, Type IV, Grade 2 or 3, Class A, B, or C may be used.

Equipment. Equipment shall be according to Article 503.03 and the following.

Chipping Hammer – The chipping hammer for removing concrete shall be a light-duty pneumatic or electric tool with a 15 lb. (7 kg) maximum class or less.

Blast Cleaning Equipment – Blast cleaning equipment for concrete surface preparation shall be the abrasive type, and the equipment shall have oil traps.

Hydrodemolition Equipment – Hydrodemolition equipment for removing concrete shall be calibrated, and shall use water according to Section 1002.

High Performance Shotcrete Equipment – The batching, mixing, pumping, hose, nozzle, and auxiliary equipment shall be for the wet-mix shotcrete method, and shall meet the requirements of ACI 506R.

Construction Requirements

General. The repair methods shall be either formed concrete repair or shotcrete. The repair method shall be selected by the Contractor with the following rules.

(a) Rule 1. For formed concrete repair, a subsequent patch to repair the placement point after initial concrete placement will not be allowed. As an example, this may occur in a vertical location located at the top of the repair.

(b) Rule 2. Formed concrete repair shall not be used for overhead applications.

(c) Rule 3. If formed concrete repair is used for locations that have reinforcement with less than 0.75 in. (19 mm) of concrete cover, the concrete mixture shall contain fly ash or ground granulated blast-furnace slag at the maximum cement replacement allowed.

(d) Rule 4. Shotcrete shall not be used for any repair greater than 6 in. (150 mm) in depth, except in horizontal applications, where the shotcrete may be placed from above in one lift.

(e) Rule 5. Shotcrete shall not be used for column repairs greater than 4 in. (100 mm) in depth, unless the shotcrete mixture contains 3/8 in. (9.5 mm) aggregate.

Temporary Shoring or Cribbing. When a temporary shoring or cribbing support system is required, the Contractor shall provide details and computations, prepared and sealed by an Illinois licensed Structural Engineer, to the Department for review and approval. When ever possible the support system shall be installed prior to starting the associated concrete removal. If no system is specified, but during the course of removal the need for temporary shoring or cribbing becomes apparent or is directed by the Engineer due to a structural concern, the Contractor shall not proceed with any further removal work until an appropriate and approved support system is installed.

Concrete Removal. The Contractor shall provide ladders or other appropriate equipment for the Engineer to mark the removal areas. Repair configurations will be kept simple, and squared corners will be preferred. The repair perimeter shall be sawed a depth of 1/2 in. (13 mm) or less, as required to avoid cutting the reinforcement. Any cut reinforcement shall be repaired or replaced at the expense of the Contractor. If the concrete is broken or removed beyond the limits of the initial saw cut, the new repair perimeter shall be recut. The areas to be repaired shall have all loose, unsound concrete removed completely by the use of chipping hammers, hydrodemolition equipment, or other methods approved by the Engineer. The concrete removal shall extend along the reinforcement bar until the reinforcement is free of bond inhibiting corrosion. Reinforcement bar with 50 percent or more exposed shall be undercut to a depth of 3/4 in. (19 mm) or the diameter of the reinforcement bar, whichever is greater.

If sound concrete is encountered before existing reinforcement bars are exposed, further removal of concrete shall not be performed unless the minimum repair depth is not met.

The repair depth shall be a minimum of 1 in. (25 mm). The substrate profile shall be ± 1/16 in. (± 1.5 mm). The perimeter of the repair area shall have a vertical face.

If a repair is located at the ground line, any excavation required below the ground line to complete the repair shall be included in this work.

The Contractor shall have a maximum of 14 calendar days to complete each repair location with concrete or shotcrete, once concrete removal has started for the repair.

The Engineer shall be notified of concrete removal that exceeds 6 in. (150 mm) in depth, one fourth the cross section of a structural member, more than half the vertical column reinforcement is exposed in a cross section, more than 6 consecutive reinforcement bars are exposed in any direction, within 1.5 in. (38 mm) of a bearing area, or other structural concern. Excessive deterioration or removal may require further evaluation of the structure or installation of temporary shoring and cribbing support system.

Surface Preparation. Prior to placing the concrete or shotcrete, the Contractor shall prepare the repair area and exposed reinforcement by blast cleaning. The blast cleaning shall provide a surface that is free of oil, dirt, and loose material.

If a succeeding layer of shotcrete is to be applied, the initial shotcrete surface and remaining exposed reinforcement shall be free of curing compound, oil, dirt, loose material, rebound (i.e. shotcrete material leaner than the original mixture which ricochets off the receiving surface), and overspray. Preparation may be by lightly brushing or blast cleaning if the previous shotcrete surface is less than 36 hours old. If more than 36 hours old, the surface shall be prepared by blast cleaning.

The repair area and perimeter vertical face shall have a rough surface. Care shall be taken to ensure the sawcut face is roughened by blast cleaning. Just prior to concrete or shotcrete placement, saturate the repair area with water to a saturated surface-dry condition. Any standing water shall be removed.

Concrete or shotcrete placement shall be done within 3 calendar days of the surface preparation or the repair area shall be prepared again.

Reinforcement. Exposed reinforcement bars shall be cleaned of concrete and corrosion by blast cleaning. After cleaning, all exposed reinforcement shall be carefully evaluated to determine if replacement or additional reinforcement bars are required.

Reinforcing bars that have been cut or have lost 25 percent or more of their original cross sectional area shall be supplemented by new in kind reinforcement bars. New bars shall be lapped a minimum of 32 bar diameters to existing bars. A mechanical bar splicer shall be used when it is not feasible to provide the minimum bar lap. No welding of bars shall be performed.

Intersecting reinforcement bars shall be tightly secured to each other using 0.006 in. (1.6 mm) or heavier gauge tie wire, and shall be adequately supported to minimize movement during concrete placement or application of shotcrete.

For reinforcement bar locations with less than 0.75 in. (19 mm) of cover, protective coat shall be applied to the completed repair. The application of the protective coat shall be according to Article 503.19, 2nd paragraph, except blast cleaning shall be performed to remove curing compound.

The Contractor shall anchor the new concrete to the existing concrete with 3/4 in. (19 mm) diameter hook bolts for all repair areas where the depth of concrete removal is greater than 8 in. (205 mm) and there is no existing reinforcement extending into the repair area. The hook bolts shall be spaced at 15 in. (380 mm) maximum centers both vertically and horizontally, and shall be a minimum of 12 in. (305 mm) away from the perimeter of the repair. The hook bolts shall be installed according to Section 584.

Repair Methods. All repair areas shall be inspected and approved by the Engineer prior to placement of the concrete or application of the shotcrete.

(a) Formed Concrete Repair. Falsework shall be according to Article 503.05. Forms shall be according to Article 503.06. Formwork shall provide a smooth and uniform concrete finish, and shall approximately match the existing concrete structure. Formwork shall be mortar tight and closely fitted where they adjoin the existing concrete surface to prevent leakage. Air vents may be provided to reduce voids and improve surface appearance. The Contractor may use exterior mechanical vibration, as approved by the Engineer, to release air pockets that may be entrapped.

    The concrete for formed concrete repair shall be a Class SI Concrete, or a packaged R1 or R2 Concrete with coarse aggregate added, or a packaged Normal Weight Concrete at the Contractor's option. The concrete shall be placed and consolidated according to Article 503.07. The concrete shall not be placed when frost is present on the surface of the repair area, or the surface temperature of the repair area is less than 40 °F (4 °C). All repaired members shall be restored as close as practicable to their original dimensions.

    Curing shall be done according to Article 1020.13.

If temperatures below 45°F (7°C) are forecast during the curing period, protection methods shall be used. Protection Method I according to Article 1020.13(d)(1), or Protection Method II according to Article 1020.13(d)(2) shall be used during the curing period.

The surfaces of the completed repair shall be finished according to Article 503.15.

(b) Shotcrete. Shotcrete shall be tested by the Engineer for air content according to Illinois Modified AASHTO T 152. The sample shall be obtained from the discharge end of the nozzle by shooting a pile large enough to scoop a representative amount for filling the air meter measuring bowl. Shotcrete shall not be shot directly into the measuring bowl for testing.

For compressive strength of shotcrete, a 18 x 18 x 3.5 in. (457 x 457 x 89 mm) test panel shall be shot by the Contractor for testing by the Engineer. A steel form test panel shall have a minimum thickness of 3/16 in. (5 mm) for the bottom and sides. A wood form test panel shall have a minimum 3/4 in. (19 mm) thick bottom, and a minimum 1.5 in. (38 mm) thickness for the sides. The test panel shall be cured according to Article 1020.13 (a) (3) or (5) while stored at the jobsite and during delivery to the laboratory. After delivery to the laboratory for testing, curing and testing shall be according to ASTM C 1140.

The method of alignment control (i.e. ground wires, guide strips, depth gages, depth probes, and formwork) to ensure the specified shotcrete thickness and reinforcing bar cover is obtained shall be according to ACI 506R. Ground wires shall be removed after completion of cutting operations. Guide strips and formwork shall be of dimensions and a configuration that do not prevent proper application of shotcrete. Metal depth gauges shall be cut 1/4 in. (6 mm) below the finished surface. All repaired members shall be restored as close as practicable to their original dimensions.

For air temperature limits when applying shotcrete in cold weather, the first paragraph of Article 1020.14(b) shall apply. For hot weather, shotcrete shall not be applied when the air temperature is greater than 90°F (32°C). The applied shotcrete shall have a minimum temperature of 50°F (10°C) and a maximum temperature of 90°F (32°C). The shotcrete shall not be applied during periods of rain unless protective covers or enclosures are installed. The shotcrete shall not be applied when frost is present on the surface of the repair area, or the surface temperature of the repair area is less than 40°F (4°C). If necessary, lighting shall be provided to provide a clear view of the shooting area.

The shotcrete shall be applied according to ACI 506R, and shall be done in a manner that does not result in cold joints, laminations, sandy areas, voids, sags, or separations. In addition, the shotcrete shall be applied in a manner that results in maximum densification of the shotcrete. Shotcrete which is identified as being unacceptable while still plastic shall be removed and re-applied.

The nozzle shall normally be at a distance of 2 to 5 ft. (0.6 to 1.5 m) from the receiving surface, and shall be oriented at right angles to the receiving surface. Exceptions to this requirement will be permitted to fill corners, encase large diameter reinforcing bars, or as approved by the Engineer. For any exception, the nozzle shall never be oriented more than 45 degrees from the surface. Care shall be taken to keep the front face of the reinforcement bar clean during shooting operations. Shotcrete shall be built up from behind the reinforcement bar. Accumulations of rebound and overspray shall be continuously removed prior to application of new shotcrete. Rebound material shall not be incorporated in the work.

Whenever possible, shotcrete shall be applied to the full thickness in a single layer. The maximum thickness shall be according to Rules 4 and 5 under Construction Requirements, General. When two or more layers are required, the minimum number shall be used and shall be done in a manner without sagging or separation. A flash coat (i.e. a thin layer of up to 1/4 in. (6 mm) applied shotcrete) may be used as the final lift for overhead applications.

Prior to application of a succeeding layer of shotcrete, the initial layer of shotcrete shall be prepared according to the surface preparation and reinforcement bar cleaning requirements. Upon completion of the surface preparation and reinforcement bar treatment, water shall be applied according to the surface preparation requirements unless the surface is moist. The second layer of shotcrete shall then be applied within 30 minutes.

Shotcrete shall be cut back to line and grade using trowels, cutting rods, screeds or other suitable devices. The shotcrete shall be allowed to stiffen sufficiently before cutting. Cutting shall not cause cracks or delaminations in the shotcrete. For depressions, cut material may be used for small areas. Rebound material shall not be incorporated in the work. For the final finish, a wood float shall be used to approximately match the existing concrete texture. A manufacturer approved finishing aid may be used. Water shall not be used as a finishing aid. All repaired members shall be restored as close as practicable to their original dimensions.

Contractor operations for curing shall be continuous with shotcrete placement and finishing operations. Curing shall be accomplished using wetted cotton mats, membrane curing, or a combination of both. Cotton mats shall be applied according to Article 1020.13(a)(5) except the exposed layer of shotcrete shall be covered within 10 minutes after finishing, and wet curing shall begin immediately. Curing compound shall be applied according to Article 1020.13(a)(4), except the curing compound shall be applied as soon as the shotcrete has hardened sufficiently to prevent marring the surface, and each of the two separate applications shall be applied in opposite directions to ensure coverage. The curing compound shall be according to Article 1022.01. Note 5 of the Index Table in Article 1020.13 shall apply to the membrane curing method.

When a shotcrete layer is to be covered by a succeeding shotcrete layer within 36 hours, the repair area shall be protected with intermittent hand fogging, or wet curing with either

burlap or cotton mats shall begin within 10 minutes. Intermittent hand fogging may be used only for the first hour. Thereafter, wet curing with burlap or cotton mats shall be used until the succeeding shotcrete layer is applied. Intermittent hand fogging may be extended to the first hour and a half if the succeeding shotcrete layer is applied by the end of this time.

The curing period shall be for 7 days, except when there is a succeeding layer of shotcrete. In this instance, the initial shotcrete layer shall be cured until the surface preparation and reinforcement bar treatment is started.

If temperatures below 45°F (7°C) are forecast during the curing period, protection methods shall be used. Protection Method I according to Article 1020.13(d)(1), or Protection Method II according to Article 1020.13(d)(2) shall be used during the curing period

Inspection of Completed Work. The Contractor shall provide ladders or other appropriate equipment for the Engineer to inspect the repaired areas. After curing but no sooner than 28 days after placement of concrete or shooting of shotcrete, the repair shall be examined for conformance with original dimensions, cracks, voids, and delaminations. Sounding for delaminations will be done with a hammer or by other methods determined by the Engineer.

The acceptable tolerance for conformance of a repaired area shall be within 1/4 in. (6 mm) of the original dimensions. A repaired area not in dimensional conformance or with delaminations shall be removed and replaced.

A repaired area with cracks or voids shall be considered as nonconforming. Exceeding one or more of the following crack and void criteria shall be cause for removal and replacement of a repaired area.

1. The presence of a single surface crack greater than 0.01 in. (0.25 mm) in width and greater than 12 in. (300 mm) in length.

2. The presence of two or more surface cracks greater than 0.01 in. (0.25 mm) in width that total greater than 24 in. (600 mm) in length.

3. The presence of map cracking in one or more regions totaling 15 percent or more of the gross surface area of the repair.

4. The presence of two or more surface voids with least dimension 3/4 in. (19 mm) each.

A repaired area with cracks or voids that do not exceed any of the above criteria may remain in place, as determined by the Engineer.

If a nonconforming repair is allowed to remain in place, cracks greater than 0.007 in. (0.2 mm) in width shall be repaired with epoxy according to Section 590. For cracks less than or equal to

0.007 in. (0.2 mm) in width, the epoxy may be applied to the surface of the crack. Voids shall be repaired according to Article 503.15.

Publications and Personnel Requirements. The Contractor shall provide a current copy of ACI 506R to the Engineer a minimum of one week prior to start of construction.

The shotcrete personnel who perform the work shall have current American Concrete Institute (ACI) nozzlemen certification for vertical wet and overhead wet applications, except one individual may be in training. This individual shall be adequately supervised by a certified ACI nozzlemen as determined by the Engineer. A copy of the nozzlemen certificate(s) shall be given to the Engineer.

Method of Measurement. This work will be measured for payment in place and the area computed in square feet (square meters). For a repair at a corner, both sides will be measured.

Basis of Payment. This work will be paid for at the contract unit price per square foot (square meter) for STRUCTURAL REPAIR OF CONCRETE (DEPTH GREATER THAN 5 IN. (125 MM), STRUCTURAL REPAIR OF CONCRETE (DEPTH EQUAL TO OR LESS THAN 5 IN. (125 MM).

When not specified to be paid for elsewhere, the work to design, install, and remove the temporary shoring and cribbing will be paid for according to Article 109.04.

With the exception of reinforcement damaged by the Contractor during removal, the furnishing and installation of supplemental reinforcement bars, mechanical bar splicers, hook bolts, and protective coat will be paid according to Article 109.04.

STRUCTURAL ASSESSMENT REPORTS FOR CONTRACTOR'S MEANS AND METHODS
Effective: March 6, 2009
Revised October 5, 2015

Description. This item shall consist of preparing and submitting, to the Engineer for approval, Structural Assessment Reports (SARs) for proposed work on structure(s) or portions thereof. Unless noted otherwise, a SAR shall be required when the Contractor's means and methods apply loads to the structure or change its structural behavior. A SAR shall be submitted and approved prior to beginning the work covered by that SAR. Separate portions of the work may be covered by separate SARs which may be submitted at different times or as dictated by the Contractor's schedule.

Existing Conditions. An Existing Structure Information Package (ESIP) will be provided by the Department to the Contractor upon request. This package will typically include existing or "As-Built" plans, and the latest National Bridge Inspection Standards (NBIS) inspection report. The availability of structural information from the Department is solely for the convenience and information of the Contractor and shall not relieve the Contractor of the duty to make, and the risk of making, examinations and investigations as required to assess conditions affecting the work. Any data furnished in the ESIP is for information only and does not constitute a part of the Contract. The Department makes no representation or warranty, express or implied, as to the information conveyed or as to any interpretations made from the data.

Removal SARs. A SAR for removal of existing structures, or portions thereof, shall demonstrate that the Contractor's proposed means and methods to accomplish the work do not compromise the structural adequacy of the bridge, or portions thereof that are to remain in service, at any time during the work activities being performed. Each phase of the operation shall be accounted for, as well as the existing condition of the structure.

Construction SARs. A SAR for new construction or for construction utilizing existing components shall demonstrate that the Contractor's proposed means and methods to accomplish the work do not compromise the structural adequacy of the bridge or portions thereof at any time during the work activities being performed. For construction activities applying less than 10 tons (9 metric tons) of total combined weight of equipment and stockpiled materials on the structure at any one time, a SAR submittal shall not be required provided the Contractor submits written verification to the Engineer stating the applied loads do not exceed this threshold. The verification shall be submitted prior to the start of the activity. This SAR exemption shall not relieve the Contractor from responsibility for the structure. A SAR shall be submitted in all cases where the existing structure is posted for less than legal loads or the Contract plans indicate a live load restriction is in place.

Requirements

a) General. All work specified shall be performed according to the Contract plans, Special Provisions and/or Standard Specifications governing that work.

Submittals for falsework and forming for concrete construction shall be according to Articles 503.05 and 503.06 and does not require a SAR. Moving construction equipment across a structure, or portions thereof, open to traffic shall be addressed according to Article 107.16 and does not require a SAR. Operating equipment on an in-service structure and/or using a portion of an in-service structure as a work platform shall require a SAR and Article 107.16 shall not apply.

The Contractor may move vehicles across the existing bridge without a SAR after closure and prior to removal of any portion of the structure provided:

- The vehicles satisfy the requirements of Section 15-111 of the Illinois Vehicle Code (described in the IDOT document "Understanding the Illinois Size & Weight Laws") or of the Federal Highway Administration document "Bridge Formula Weights" (available at: http://www.ops.fhwa.dot.gov/freight/publications/brdg_frm_wghts/index.htm)
- The Contractor submits written verification to the Engineer stating the vehicles meet these requirements. The verification shall be submitted prior to allowing the vehicles on the structure.

This SAR exemption shall not relieve the Contractor from responsibility for the structure. This SAR exemption shall not be allowed where the existing structure is posted for less than legal loads or the Contract plans indicate a live load restriction is in place. No stockpiling of material is allowed under this exemption.

All SARs shall detail the procedures and sequencing necessary to complete the work in a safe and controlled manner. When appropriate, supporting design calculations shall be provided verifying the following:

- The effects of the applied loads do not exceed the capacity at Operating level for any portions of the structure being utilized in the demolition of the structure provided those portions are not to be reused.
- The effects of the applied loads do not exceed the capacity at Inventory level for new construction or for portions of the existing structure that are to be reused.
- The condition of the structure and/or members has been considered.

See AASHTO Manual for Bridge Evaluation for further information on determining the available capacities at the Operating and Inventory levels.

b) Confidential Documents. Due to the sensitivity of the inspection reports and bridge condition reports to bridge security, the following confidentiality statement applies to these reports:

"Reports used by the Contractor and the contents thereof are the property of the Department, and are subject to the control of the Department in accordance with State and Federal law. The distribution, dissemination, disclosure, duplication or release of these reports or the content thereof in any manner, form or format without the express permission of the keeper of this record is prohibited. The owner is the official keeper of these records, except for state owned bridges, where the official keeper of these records is the Regional Engineer."

c) Submittals. The Contractor shall be pre-approved to prepare SAR(s) or shall retain the services of a pre-qualified engineering firm to provide these services. Pre-approval of the Contractor will be determined by the Illinois Department of Transportation and will allow SAR(s) preparation by the Contractor unless otherwise noted on the plans. For engineering firms, pre-qualification shall be according to the Department in the category of "Highway Bridges-Typical" unless otherwise noted on the plans. Firms involved in any part of the project (plan development or project management) will not be eligible to provide these services. Evidence of pre-approval/pre-qualification shall be submitted with all SAR(s). The SAR(s) shall be prepared and sealed by an Illinois Licensed Structural Engineer. The Contractor shall submit SAR(s), complete with working drawings and supporting design calculations, to the Engineer for approval, at least 30 calendar days prior to start of that portion of the work.

At a minimum a Structural Assessment Report shall include the following:

1. A plan outlining the procedures and sequence for the work, including staging when applicable.
2. A demolition plan (when removal is included as an item of work in the contract) including details of the proposed methods of removal.
3. A beam erection plan (when beam erection is included as an item of work in the contract) including details of the proposed methods of erection.
4. Pertinent specifications for equipment used during the work activity.
5. The allowable positions for that equipment during the work activity.
6. The allowable positions and magnitudes of stockpiled materials and/or spoils, if planned to be located on the structure.
7. Design and details for temporary shoring and/or bracing, if required by the Contractor's means and methods.

Approval or acceptance of a Structural Assessment Report shall not relieve the Contractor of any responsibility for the successful completion of the work.

Revisions to the Contractor's means and methods resulting in no increased load effects to the structure, as determined by the Contractor's Structural Engineer, shall not require a SAR resubmittal. However, the Contractor's Structural Engineer shall submit to the Engineer written verification that there is no increased load effect. The written verification shall specify the revisions and shall be submitted prior to the start of the revised activities.

The Contractor shall be responsible for following the approved SAR related to the work involved.

Method of Measurement. Structural Assessment Reports will not be measured for payment.

Basis of payment. Structural Assessment Reports will not be paid for separately but shall be considered as included in the contract unit price(s) for the work item(s) specified.

WEEP HOLE DRAINS FOR ABUTMENTS, WINGWALLS, RETAINING WALLS AND CULVERTS
Effective: April 19, 2012
Revised: October 22, 2013

Delete the last paragraphs of Articles 205.05 and 502.10 and replace with the following.

"If a geocomposite wall drain according to Section 591 is not specified, a prefabricated geocomposite strip drain according to Section 1040.07 shall be placed at the back of each drain hole. The strip drain shall be 24 inches (600 mm) wide and 48 inches (1.220 m) tall. The strip drain shall be centered over the drain hole with the bottom located 12 inches (300 mm) below the bottom of the drain hole. All form boards or other obstructions shall be removed from the drain holes before placing any geocomposite strip drain."

Revise the last sentence of the first paragraph of Article 503.11 to read as follows.

"Drain holes shall be covered to prevent the leakage of backfill material according to Article 502.10."

Revise the title of Article 1040.07 to Geocomposite Wall Drains and Strip Drains.

BRIDGE DECK CONSTRUCTION
Effective: October 22, 2013
Revised: December 21, 2016

When Diamond Grinding of Bridge Sections is specified, hand finishing of the deck surface shall be limited to areas not finished by the finishing machine and to address surface corrections according to Article 503.16(a)(2). Hand finishing shall be limited as previously stated solely for the purpose of facilitating a more timely application of the curing protection. In addition the requirements of 503.16(a)(3)a. and 503.16(a)(4) will be waived.

Revise the Second Paragraph of Article 503.06(b) to read as follows.

"When the Contractor uses cantilever forming brackets on exterior beams or girders, additional requirements shall be as follows."

Revise Article 503.06(b)(1) to read as follows.

"(1) Bracket Placement. The spacing of brackets shall be per the manufacturer's published design specifications for the size of the overhang and the construction loads anticipated. The resulting force of the leg brace of the cantilever bracket shall bear on the web within 6 inches (150 mm) of the bottom flange of the beam or girder."

Revise Article 503.06(b)(2) to read as follows.

"(2) Beam Ties. The top flange of exterior steel beams or girders supporting the cantilever forming brackets shall be tied to the bottom flange of the next interior beam. The top flange of exterior concrete beams supporting the cantilever forming brackets shall be tied to the top flange of the next interior beam. The ties shall be spaced at 4 ft (1.2 m) centers. Permanent cross frames on steel girders may be considered a tie. Ties shall be a minimum of 1/2 inch (13 mm) diameter threaded rod with an adjusting mechanism for drawing the tie taut. The ties shall utilize hanger brackets or clips which hook onto the flange of steel beams. No welding will be permitted to the structural steel or stud shear connectors, or to reinforcement bars of concrete beams, for the installation of the tie bar system. After installation of the ties and blocking, the tie shall be drawn taut until the tie does not vary from a straight line from beam to beam. The tie system shall be approved by the Engineer."

Revise Article 503.06(b)(3) to read as follows.

"(3) Beam Blocks. Suitable beam blocks of 4 in x 4 in (100 x 100 mm) timbers or metal structural shapes of equivalent strength or better, acceptable to the Engineer, shall be wedged between the webs of the two beams tied together, within 6 inches (150 mm) of the bottom flange at each location where they are tied. When it is not feasible to have

the resulting force from the leg brace of the cantilever brackets transmitted to the web within 6 inches (150 mm) of the bottom flange, then additional blocking shall be placed at each bracket to transmit the resulting force to within 6 inches (150 mm) of the bottom flange of the next interior beam or girder."

Delete the last paragraph of Article 503.06(b).

MICROPILES
Effective: April 19, 1996
Revised: October 5, 2015

Description. This work shall consist of designing, furnishing, installing and testing the proposed micropiles according to the plans, approved shop drawings, and this Special Provision.

The Contractor shall be responsible for selecting the micropile type, installation method, bond lengths, grout pressures, and any necessary changes to the structural elements, such that the micropiles will carry both the compressive and tension design loads indicated on the plans at the maximum tolerable deflections specified. The Contractor shall demonstrate the micropile adequacy by performing pile load test(s) and micropile proof tests that satisfy the acceptance criteria of this Special Provision.

Submittals. The Contractor selected to perform this work shall satisfy the qualification requirements and shall provide shop drawings for the proposed micropile installation.

(a) Qualifications: The Contractor performing the work shall have personnel experienced in the design, construction and testing of micropiles. The Contractor shall have successfully installed a total of at least 100 micropiles on no less than five (5) different projects completed within the last five (5) years of similar project conditions and capacities to those required on this project.

The Contractor shall assign a field supervisor with experience on at least three (3) projects of similar scope to this project, completed over the past five (5) years. The on-site foreman and drill rig operator(s) must have completed three (3) projects within the last five (5) years involving micropiles of equal or greater capacity than required on this project. The Department may suspend the micropile work if the Contractor substitutes unqualified personnel and the Contractor shall be liable for additional costs resulting from the suspension.

The above experience qualifications list and personnel list shall be submitted for approval prior to or with the shop drawings submittal.

(b) Design Calculations and Shop Drawings. At least five weeks before work is to begin, the Contractor shall submit to the Engineer for review and approval, design calculations and complete shop drawings describing the micropile system, or systems, intended for use. The micropiles shall be designed and detailed to carry the tension and compression loadings indicated on the plans. The submittal shall be prepared and sealed by an Illinois Licensed Structural Engineer and include (as a minimum) the following:

(1) Design calculations including the following:

a. Geotechnical design computations that describe how the micropile bonded lengths were designed.

b. Applicable code requirements and design reference literature used in the geotechnical and structural computations.

c. Micropile design profile cross-section(s) geometry including casing plunge length(s), bonded lengths and minimum diameter, the soil/rock strata anticipated, and the piezometric levels.

d. Design criteria including soil/rock shear strengths (friction angle and cohesion), unit weights, minimum grout compressive strength, ground/grout bond values, and assumptions for each soil/rock strata.

e. Resistance factors used and the resulting factored geotechnical resistance of each portion of the micropile.

f. Structural design calculations sizing the load and proof testing frame, reaction piles and connections to both the reaction piles and micropiles. Geotechnical calculations shall be submitted to indicate that a minimum factored resistance exists for the reaction piling equal to twice the maximum test loading.

g. If proposing to modify the anchorage head assembly, connection to footing, casing, reinforcement, bearing plate or weld details shown in the plans, structural calculations supporting these changes shall also be submitted.

(2) Shop drawings including the following:

a. Plan view of the project showing:
   1. All proposed micropiles with each labeled with a unique identification number.
   2. Locations of subsurface exploration borings plotted and labeled.
   3. Proposed overall sequence of construction.
   4. Locations of micropiles to be proof tested and load tested.

b. Elevation view of project showing:
   1. The location of the existing substructures and all soil boring data plotted with all major changes in soil type or stratification identified.
   2. The proposed micropile lengths plotted at each substructure as well as the bottom of casing, top of bonded length, plunge length and minimum tip elevations indicated.
   3. All general notes for constructing the micropiles.

c. Micropile typical section showing:
   1. The proposed typical micropile configuration(s) including steel casing, reinforcement sizes, grout tubes and minimum grouted diameters (in both the cased and bonded lengths).
   2. Step by step installation procedure(s) including casing advancement, grouting elevations, re-grouting, etc.
   3. Reinforcement centralizers and spacer locations and details.

4. Casing splice details.

d. Anchorage head assembly details including reinforcement, casing, bearing plate, embedment/connection to footing and required weld sizes if proposing to deviate from those provided in the plans.

e. Any revisions to details shown on the plans necessary to accommodate the micropile system intended for use.

f. Micropile load and proof testing sheet showing:
   1. Load frame and anchor pile details for load tests.
   2. Load frame and reaction pile connection for proof testing production piles.
   3. Any additional reinforcement and grout strength required in the load test micropiles to permit testing to 1.5 times the design loadings.
   4. Jack, pressure gauge and load cell calibration curves.

g. The grout mix design and procedures for monitoring and recording the grout depth, volume and pressure during the grouting process.

Work shall not start on any micropile, nor shall materials be ordered, until the shop drawings and qualifications have been approved in writing by the Engineer.

Materials. The materials used for the construction of the micropiles shall satisfy the following requirements:

(a) Reinforcement Steel: Micropiles reinforcement shall consist of single or multiple elements of either 150 ksi (1034 MPa) or 75ksi (520 MPa) (f_u) high strength threadbars or deformed bars conforming to ASTM A722 or A706.

(b) Steel Couplers: Prestressing steel couplers shall be capable of developing 95 percent of the minimum specified ultimate tensile strength of the reinforcement steel.

(c) Grout: The grout shall consist of a neat cement or sand cement mixture of Type II, III or V portland cement conforming to Section 1024.01 of the Standard Specifications. The minimum compressive strength of the grout shall be as specified on the plans but not less than 4 ksi (27.6 MPa). Expansive admixtures may not be used except to seal the encapsulations and anchorage covers. Admixtures to control bleed, improve flowability, reduce water content, and retard set may be used if approved by the Engineer. Accelerators and admixtures containing chlorides are not permitted.

(d) Fine Aggregate: If sand-cement grout is used, sand shall conform to the requirements for fine aggregates according to Section 1003 of the Standard Specifications.

(e) Spacers: Spacers for separation of elements of a multi-element reinforcement shall permit the free flow of grout. They shall be fabricated from plastic, steel or material which is not detrimental to the reinforcement. Wood shall not be used. Spacers shall be placed along

the total length of the micropile so that the steel will bond to the grout. They shall be located at 10 ft (3 m) maximum centers with the upper one located a maximum of 5 ft (1.5 m) from the top of the micropile and the lower one located a maximum of 5 ft (1.5 m) from the bottom of the bonded length.

(f) Centralizers: Centralizers shall be fabricated from plastic, steel or material which is not detrimental to the reinforcing steel. Wood shall not be used. Centralizers shall be able to maintain the reinforcement position and alignment so that a minimum of 1.5 inches (38 mm) of grout cover is obtained at all locations below the cased micropile length. They shall be located at 10 ft (3 m) maximum centers with the lower one located one foot from the bottom of the bonded length.

(g) Anchorage head assembly: The materials properties, dimensions, and design details for the micropile anchorage head assembly components shall be as specified on the contact plans unless otherwise proposed by the Contractor and approved as part of the shop drawings submittal. Anchorage components may include bearing plates (ASTM A572 Grade 50), shear studs, reinforcement steel, nuts, casing and other approved components.

(h) Steel casing: Steel casing shall be flush joint API N-80 Pipe of the wall thickness and diameter shown on the plans. Any changes to this casing shall be submitted to the Department for review and approval as part of the shop drawing submittal.

Construction Requirements. The drilling method used may be rotary drilling, percussion drilling or an approved alternate. The method of installation used shall be that which prevents loss of ground around the drilled hole that may be detrimental to the structure. The drillhole shall be maintained open along its full length at the minimum drillhole diameter specified on the approved shop drawings prior to placing reinforcement and grout. Temporary casing or other approved method of micropile drillhole support shall be required in caving or unstable conditions.

The Contractor shall notify the Engineer if an obstruction is encountered. An obstruction is an unknown isolated object that causes the excavation to experience a significant decrease in the actual production rate and requires the Contractor to core, break up, push aside, or use other means to mitigate the obstruction. Subsurface conditions such as boulders, cobbles, or logs and buried infrastructure such as footings, piling, or abandoned utilities, when shown on the plans, shall not constitute an obstruction. When an obstruction is encountered, the Contractor shall notify the Engineer immediately and upon concurrence of the Engineer, the Contractor shall mitigate the obstruction with an approved method unless relocating the micropile would be less expensive.

Casing shall be installed in sections of appropriate lengths with threaded connections. The casing shall be capable of advancing the hole through the soil strata as indicated in the boring data. Welded Joints may be used if the welding detail is submitted and approved as part of the shop drawings.

The reinforcement shall be placed prior to grouting. The reinforcement shall be inserted to the desired depth without undue stress or difficulty (not driven or forced). When the reinforcement

cannot be completely inserted it shall be removed and the drill hole cleaned or re-drilled to permit insertion. The reinforcement shall be free of soil, grease, or oil that might reduce the grout to bar bond.

The micropiles shall be grouted within 24 hours after the load transfer bond length is drilled. Grout shall be free of any lumps and undispersed cement. The grout volumes and pressures shall be measured and recorded during the placement operation. The pump shall be equipped with a grout pressure gauge at the pump and a second gauge placed at the point of injection at the top of the casing to monitor grout pressures. The gauges shall be capable of measuring pressures of at least 150 psi (1.0 MPa) or twice the actual grout pressures used, whichever is greater. The grout shall be continuously agitated after mixing. All grout shall be place within one hour of mixing. The grouting equipment shall be sized to enable each pile to be grouted in one continuous operation. The grout shall be injected from the lowest point of the drillhole (through grout tubes, casing, drill rods, etc.) and continued until uncontaminated grout flows from the top of the micropile. Temporary casing, if used, shall be extracted in stages ensuring that, after each length of casing is removed, the grout level is brought up to ground level before the next length is removed. The casing or grout tube shall always extend below the level of the grout in the drillhole. Upon completion of grouting, the grout tube or access valve may remain in the drill hole and anchorage head assembly provided it is filled with grout. The grout take and pressure shall be controlled to prevent any heave of the ground surface or foundations.

The Contractor shall monitor the existing foundation for movement. If movement is detected, the Contractor shall immediately stop production and notify the Engineer. Work shall not resume until the Contractor's recommendations to remedy the situation are approved by the Engineer.

The following construction tolerances shall apply to all production micropiles:

(a) The center of the micropile casing shall be within 2 in. (50 mm) of plan location in any direction at the top of the pile.

(b) The deviation of the shaft batter from that specified shall not exceed 1/8 in./ft. (10 mm/m).

(c) The top of the casing shall be within ± 2 inches (50 mm) of the plan elevation.

Micropile Load Test and Micropile Proof Test. The Contractor shall install and load test non-production micropile(s) as well as proof test selected production micropiles. The load testing shall be performed by incrementally loading the micropiles according to ASTM D 1143 for the compression loading and ASTM D 3689 for the tension loading using the Quick Load Test Method except as modified herein. Testing shall not take place until the grout has acquired the specified design strength.

The jack ram travel shall be positioned at the beginning of the test so that unloading and repositioning during the test shall not be required. When both compression and tension loading is to be performed, it shall be performed on the same micropile and the compression loading shall be conducted first. Dial gauges capable of measuring displacements to 0.001 inch (0.025 mm) shall be used to measure micropile movement of the jack from an independent reference

point. If the test setup requires reaction against the ground or a single row of reaction piles, two gauges shall be used on either side of the micropile. The reaction frame and piles shall be adequately stiff to prevent excessive deformation, misalignment or racking under peak loading. The stressing equipment shall be placed over the micropile in such a manner that the jack, load cell, and load test reaction frame are axially aligned with the anchorage head assembly reinforcement. Gauges shall have adequate travel so the total micropile movements can be measured without resetting the devices.

Test loads shall be applied with a hydraulic jack and measured with a pressure gauge. The pressure gauge shall be graduated in 72 psi (500 kPa) increments or less. The jack and pressure gauge shall have a pressure range not exceeding twice the anticipated maximum test pressure. Monitor the creep test load hold during testing with both the pressure gauge and electronic load cell. The load cell shall be used to accurately maintain a constant load hold during the creep test load hold increment of the testing.

Micropile Load Test. The Contractor shall perform non-production micropile load test(s) to verify the design and the construction methods proposed prior to installing production micropiles. The number and general location of the load test(s) are indicated in the plans and shall be constructed and tested according to this specification and the approved shop drawings.

The micropile load test Design Load shall be taken as the maximum factored compression and tension strength group loadings indicated at any substructure covered by the load test as shown on the plans. Micropiles not founded in rock shall follow the test loading schedule shown below. Micropiles founded in rock may omit increments 1 through 12:

Load Test Schedule

Increment	Loading Applied	Increment	Loading Applied
1	Alignment Load	13	Alignment Load
2	0.25 Design Load	14	0.25 Design Load
3	0.50 Design Load	15	0.50 Design Load
4	Alignment Load	16	0.75 Design Load
5	0.25 Design Load	17	1.00 Design Load
6	0.50 Design Load	18	1.25 Design Load
7	0.75 Design Load	19	1.50 Design Load
8	Alignment Load	20	1.00 Design Load
9	0.25 Design Load	21	0.50 Design Load
10	0.50 Design Load	22	0.25 Design Load
11	0.75 Design Load	23	Alignment Load
12	1.00 Design Load		

The dial gauges shall be reset to zero after the initial Alignment Load increment is applied. The Alignment Load is defined as the minimum load necessary to maintain alignment of the stressing equipment and reaction frame. The load holding period shall start as soon as each load increment is fully applied and last for 1 minute for each increment with the exception of the 1.0 load increments which shall be held for 10 minutes. The jack shall be re-pumped as

necessary in order to maintain a constant load during this period. The micropile deflections shall be measured and recorded at the end of the load holding period. In addition, the 1.0 load hold increment shall be monitored for creep by recording the micropile movements at 1, 2, 3, 5, 6, and 10 minutes during the load hold. If the movement between the 1 and 10 minute increments exceeds 0.04 inches (1 mm), the load hold shall be extended and held for an additional 50 minutes. Movement shall be recorded at the 15, 20, 30, 40, 50 and 60 minute time increments.

A graph shall be constructed showing a plot of anchorage head assembly movement deflections versus test loading (both tension and compression) at the end of each load increment in the test schedule including the rebound measurements after unloading.

The acceptance criteria, demonstrating a successful load test, are as follows:

(a) The micropile shall carry at least 1.0 times the design compression and tension loadings with a deflection of the anchorage head assembly less than the theoretical elastic deflection from its anchorage head to the midpoint of the bonded length.

(b) The micropile shall have a creep rate not exceeding 0.08 inch (2 mm)/log cycle of time at the end of the 1.5 times the Design Load increment. The creep rate graphed on log scale shall be linear or decreasing throughout the creep load hold period.

(c) The nominal geotechnical resistance shall exceed 1.5 times the factored compression and tension design loads shown on the plans, as determined using Davisson Method as presented in AASHTO article 10.7.3.8.2.

In the event that a load tested micropile fails the acceptance criteria, the Contractor shall re-evaluate his/her design and construction procedures, making the necessary changes to install an additional non-production micropile and any additional anchor pile(s) to allow another load test. The above process shall be repeated until a successful micropile passes the load test acceptance criteria. Payment for the successful load test shall include all work associated with any failed micropile load test(s).

The Engineer will provide the Contractor with written confirmation of the micropile design and construction within 10 working days of the completion of the load test(s). This written confirmation shall confirm the adequacy of the bonded lengths and tip elevations shown on the Contractor's shop drawing or the revised values required due to any failed micropile.

Load tested micropiles and reaction piles located in non-production locations shall be cut 2 ft. (600 mm) below finished grade after completion.

Micropile Proof Test: The Contractor shall install a set of micropiles at each substructure unit designated to have micropiles for the purpose of conducting a proof test on a production micropile. A set of micropiles is defined as the minimum number of micropiles (production or sacrificial) required to proof test a production micropile and provide the proof test load frame reaction capacity. If the contactor chooses to install additional production micropiles prior to

proof testing, re-grouting or additional micropiles may be required at the contractor expense should the proof test not pass the acceptance criteria.

The proof test Design Load shall be taken as the maximum factored compression and maximum tension strength group loadings indicated at each substructure, shown on the plans. The loadings shall be incrementally applied according to the schedule shown below:

Proof Test Schedule

Increment	Loading Applied	Increment	Loading Applied
1	Alignment Load	7	0.90 Design Load
2	0.15 Design Load	8	1.00 Design Load
3	0.30 Design Load	9	0.75Design Load
4	0.45 Design Load	10	0.50 Design Load
5	0.60 Design Load	11	0.25 Design Load
6	0.75 Design Load	12	Alignment Load

The dial gauges shall be reset to zero after the initial Alignment Load increment is applied. The Alignment Load is defined as the minimum load necessary to maintain alignment of the stressing equipment and reaction frame. The load holding period shall start as soon as each load increment is fully applied and last for 1 minute for each increment with the exception of the 1.00 load increment which shall have a 10 minute load hold. If the top of the micropile movement between the 1 minute and 10 minute time intervals exceeds 0.04 inches (1 mm), the 1.00 load hold shall be maintained for an additional 50 minutes. The jack shall be re-pumped as necessary in order to maintain a constant load during this period. The micropile deflections shall be measured and recorded at the end of the load holding period. The 1.00 load hold increment shall be monitored by recording the micropile movements at 1, 2, 3, 5, 6, and 10 minutes and if extended shall be recorded at the 20, 30, 50, and 60 minutes during the load hold.

A graph shall be constructed showing a plot of anchorage head assembly movement deflections versus test loading (both tension and compression) at the end of each load increment in the test schedule including the rebound measurements after unloading.

The acceptance criteria, demonstrating a successful load test, are as follows:

(a) The micropile shall carry at least 1.0 times the design compression and tension loadings with a deflection of the anchorage head assembly less than the theoretical elastic deflection from its anchorage head to the midpoint of the bonded length.

(b) The micropile shall have a creep rate not exceeding 0.08 inch (2 mm)/log cycle of time at the end of the 1.0 times the Design Load increment. The creep rate graphed on log scale shall be linear or decreasing throughout the creep load hold period.

In the event that a production micropile fails the proof test acceptance criteria, the Contractor shall re-evaluate his/her design and construction procedures, make the necessary changes and install an additional non-production micropile and additional anchor pile(s), outside the proposed

footing and proof test the revised micropile. The above process shall be repeated until a micropile passes the acceptance criteria. The set of production micropiles installed as part of the failed proof test shall be cut flush with the bottom of the footing and supplemented by micropiles installed using improved design and installation methods adjacent to the failed micropiles. The failed load test(s), any supplemental or additional anchor piles, or micropiles cut flush with the bottom of the footing shall be included with the successful micropile proof test loading.

Basis of Payment. This work will be paid for at the contract unit price each for MICROPILES, and shall be compensation in full for designing, furnishing and installing the production micropiles incorporated in the final structure, according to the contract plans, approved shop drawings, and the Special Provisions. Pile load testing of non-production micropiles passing the acceptance criteria will be paid for at the contract unit price each for MICROPILE LOAD TEST and shall be compensation in full for designing, furnishing and installing the load tested micropile(s), anchor piles, reaction frame, and applying the test loads. Micropile proof testing of selected production micropiles will be paid for at the contract unit price each for MICROPILE PROOF TEST and shall be compensation in full for installing the anchor piles, reaction frame, and applying the test loads.

Obstruction mitigation will be paid for according to Article 109.04 of the Standard Specifications.

PREFORMED PAVEMENT JOINT SEAL
Effective: October 4, 2016
Revised:

Description. This work shall consist of furnishing all labor, equipment and materials necessary to prepare the joint opening and install pavement joint seal(s) at the locations specified. Unless otherwise detailed on the plans, the joint shall be sized for a rated movement of 2 inches (50 mm).

Materials: Unless otherwise specified, one of the following prefabricated joint seals will be permitted.

(a) Preformed Elastomeric Joint Seal. This material shall be according to Section 1053.01.

(b) Preformed Pre-compressed, Silicone Coated, Self-Expanding Sealant System. This Sealant system shall be comprised of three components: 1) cellular polyurethane foam impregnated with hydrophobic 100% acrylic, water-based emulsion, factory coated with highway-grade, fuel resistant silicone; 2) field-applied epoxy adhesive primer, 3) field-injected silicone sealant bands.

The preformed, pre-compressed silicone joint seal shall, as a minimum, be according to the following:

- The joint seal shall be held in place by a non-sag, high modulus silicone adhesive.
- The joint seal shall be compatible with the epoxy and header material.
- The joint seal shall withstand the effects of vertical and lateral movements, skew movements and rotational movement without adhesive or cohesive failure.
- The joint seal shall be designed so that, the material is capable of movement of +50%, -50% (100% total) of nominal material size.
- Changes in plane and direction shall be executed using factory fabricated 90 degree transition assemblies. The transitions shall be watertight at the inside and outside corners through the full movement of the product.
- The depth of the joint shall be recessed 3/4 in. (19 mm) below the riding surface throughout the normal limits of joint movement.
- The joint seal shall be resistant to ultraviolet rays.
- The joint seal shall be resistant to abrasion, oxidation, oils, gasoline, salt, and other materials that may be spilled on or applied to the surface.
- The manufacturer shall certify that the joint composition shall be free of any waxes or wax compounds; asphalts or asphalt compounds.

The joint material shall meet the following physical properties:

Property	Requirement	Test Method
Tensile Strength of Silicone Coating (min)	140 psi	ASTM D 412
UV Resistance of Joint System	No Changes--2000 Hours	ASTM G155-00A
Density of Cellular Polyurethane Foam	12.5lb/ cu ft (200kg/cu m)	ASTM D545
Heat Aging Effects (Silicone Coating)	No cracking, chalking	ASTM C 792
Resilience (Silicone Coating)	≥ 95%	ASTM D 5329
Joint System Operating temp range (min)	-40° F to 185° F	ASTM C 711

The adhesive shall be a two-component, 100% solid, modified epoxy meeting the requirements of ASTM C881, Type I, Grade 3, Class B & C. The adhesive shall also have the following properties:

Property	Requirement	Test method
Tensile Strength	2,500 psi (24 MPa) min.	ASTM D638
Compressive Strength	7000 psi (48 MPa) min.	ASTM D695
Bond Strength (Dry Cure)	2000 psi (28MPa) min	ASTM C882
Water Absorption	0.1% by weight	ASTM D570

The silicone band adhesive shall have the following properties:

Property	Requirement	Test Method
Movement Capability	+100/-50%	ASTM C 719
Elongation at Break	>1400%	ASTM D 412
Slump	≤=0.3"	ASTM D 2202
Hardness (Shore A) max.	20	ASTM C 661
Tack free time (max)	60 minutes	ASTM C 679
Heat Aging Effects	No cracking, chalking	ASTM C 792
Resilience	≥ 95%	ASTM D5329

Bond	0% Adhesive or Cohesive Failure after 5 cycles @100%extension	ASTM D 5329

(c) Performed Silicone Joint Seal. The preformed silicone joint seal used for this item shall conform to the following specifications:

Table 1
Physical Properties of Preformed Silicone Gland

Property	Requirement	Test Method
Rated Movement Capability	+2 ¼ inch total	N/A
Tensile Strength, psi.	1000 min	ASTM D 412
Elongation	400% min	ASTM D 412
Tear (die B)	100 ppi. min	ASTM D 624
Hardness Durometer (Shore A).	55 +/- 5 max	ASTM D 2240
Compression set at 212°F, 70 hrs	30% max	ASTM D 395
Heat Aged Properties	5pt max loss on Durometer	ASTM D 573
Tensile and Elongation % Loss	10 % max	
Color	Black	Visual

The color of the preformed silicone seal shall be black, made by the addition of Carbon Black fillers which increases UV resistance, tensile strength, and abrasion wear properties.

The locking adhesive shall be non-sag, high modulus silicone adhesive conforming to the following specifications:

Table 2
Physical Properties of the Silicone Locking Adhesive

Property	Requirement	Test Method
Tensile Strength, psi.	200 min	ASTM D 412
Elongation, %	450 min	ASTM D 412
Tack Free Time, minutes.	20 max.	ASTM C 679
Cure Time ¼" bead, hrs	24 max	ASTM C 679
Resistance to U.V.	No cracking, chalking,or degradation	ASTM C793
VOC (g/L)	0	ATSM D 3960

Any rips, tears, or bond failure will be cause for rejection.

The two part epoxy primer shall be supplied for application to the vertical faces of the joint opening. The supplied primer shall be equally as effective when bonded to concrete or steel. This primer shall meet the following criteria:

Table 3
Physical Properties of Preformed Silicone Joint System
Primer

Property	Requirement	Test Method
Viscosity (cps)	44	ASTM D 2196
Color	Light Amber	Visual
Solids (%)	41	ASTM D 4209
Specific Gravity	0.92	ATSM D 1217
Product Flash Point (◦F, T.C.C.)	48	ATSM D 56
Package Stability	N/A	One year in tightly sealed containers
Cleaning	N/A	Mineral Spirits
VOC (g/L)	520	ATSM D 3960

(d) Bonded Preformed Joint Seal. This joint system shall consist of preformed elastomeric seal bonded to the side walls of the joint opening using an adhesive as specified by the Manufacturer of the joint seal.

The bonded preformed joint seal shall be according to Table 1 of ASTM D2628 with the following exceptions: Compression set shall not be over 40 percent when tested according to Method B (Modified) of ASTM D 395 after 70 hours at 212 ºF (100 ºC). The Compression-Deflection requirement will not apply to the bonded preformed joint seal.

The adhesive shall be epoxy base, dual component, which resists salt, diluted acids, alkalis, solvents, greases, oils, moisture, sunlight and weathering. Temperatures up to 200 ºF (93 ºC) shall not reduce bond strength. At 68 ºF (20 ºC), the bond strength shall be a minimum of 1000 psi (6.9 MPa) within 24 hours.

Any primers or cleaning solutions used on the faces of the joint or on the profile of the sides of the bonded preformed joint seal shall be supplied by the manufacturer of the bonded preformed joint seal.

Any additional installation materials and adhesive for splicing joint sections shall be as supplied by the manufacturer of the preformed joint seal.

The Contractor shall submit the Manufacturer's material certification documentation stating that their materials meet the applicable requirements of this specification for the joint seal(s) installed.

CONSTRUCTION REQUIREMENTS

General. The Contractor shall furnish the Engineer with the manufacturer's product information and installation procedures at least two weeks prior to installation.

The minimum ambient air temperature in which the joint seal can be installed is 40° F (4.4° C) and rising, except for bonded preformed joint seals which shall not be installed when temperatures below 50 ºF (10 ºC) are predicted within a 48 hour period.

The joint surface shall be completely dry before installing the Joint Seal. For newly placed concrete, the concrete shall be fully cured and allowed to dry out a minimum of seven additional days prior to placement of the seal. Cold, wet, inclement weather will require an extended drying time.

The Joint Seal shall not be installed immediately after precipitation or if precipitation is forecasted for the day. Joint preparation and installation of Joint Seal shall be done during the same day.

Surface Preparation. Surface preparation shall be according to the joint seal manufacturer's written instructions.

After surface preparation is completed, the joint shall be cleaned of debris using compressed air with a minimum pressure of 90 psi (620 kPa). The air compressor shall be equipped with traps to prevent the inclusion of water and/or oil in the air line. The compressed air shall be according to the cleanliness requirements of ASTM D 4285.

When priming is required per the manufacturer's instruction, this operation shall immediately follow cleaning.

Joint Installation. The Joint installation shall be per the manufacturer's instructions; special attention shall be given to insure the joint seal is properly recessed below the top of the riding surface as recommended by the manufacturer.

For bonded joint seals the seal shall be inserted into the joint and held tightly against both sides of the joint until sufficient bond strength has been developed to resist the expected expansion forces.

Opening to traffic. As these joint systems are supposed to be recessed below the top of the riding surface, there should be no restriction, based on the joint seal installation, on when these joints can be reopened to traffic.

Method of Measurement. The installed prefabricated joint seal will not be measured for payment.

Basis of Payment. The prefabricated joint seal will not be paid for separately but shall be considered included in the cost of the adjacent concrete work involved.

SPECIAL PROVISIONS CHECK LIST
Generated – 1/12/18 11:28 AM

Designer:	**BB&A**	**FAP:**	**345**
Contract No.:	**E-5-038**	**Section:**	**06-E5038-00-BR**
		County:	**Cook**

√	Dir	File Name	Spec Title	Spec Dates
√	DES\	1048945R.DOC	Maintenance of Roadways	E 9/30/85 R 11/1/96
	DES\	1078948R.DOC	Tollway Permit and Bond	E 01/13/89
	DES\	1080301.doc	Restriction on Working Days After a Completion Date	E 01/21/03 R 01/01/07
	DES\	1086587r.doc	Failure to Complete the Work on Time	E 09/30/85 R 01/01/07
	DES\	1088949R.DOC	Completion Date Plus Working Days	E 09/30/85 R 01/01/07
	DES\	1088951R.DOC	Incentive Payment Plan	E 10/01/95 R 01/01/07
	DES\	2080101.doc	RAP For Non-Porous Embankment and Backfill	E 04/01/01 R 01/01/07
	DES\	4020211.doc	Aggregate Surface Course for Temporary Access	E 04/01/01 R 01/02/07
	DES\	4408955R.DOC	Pavement Removal, Special	E 01/13/89 R 01/01/07
	DES\	5028956R.DOC	Rock Excavation for Structures, Special	E 09/30/85 R 01/01/07
	DES\	5038957R.DOC	Rustication Finish For Retaining Walls	E 05/01/90 R 01/01/07
	DES\	5501234R.DOC	Storm Sewer Adjacent to or Crossing Water Main	E 02/01/96 R 01/01/07
	DES\	5508960R.DOC	Storm Sewers & Sewer Connections to City of Chicago Sewers	E 09/30/85 R 01/01/07
	DES\	6008961R.DOC	Slotted Drain	E 09/30/85 R 01/01/07
	DES\	6028962R.DOC	Cleaning Existing Drainage Structures	E 09/30/85 R 12/01/11
	DES\	6068964R.DOC	Concrete Curb, Type B (Modified)	E 09/30/85 R 01/01/07
	DES\	6068965R.doc	Stabilized Median Surface	E 09/30/85 R 03/02/17
√	DES\	6370499.doc	Aggregate For Concrete Barrier (D-1)	E 03/11/04 R 01/24/08
	DES\	7016789.DOC	Traffic Control & Protection (Arterials)	E 02/01/96 R 03/01/11
√	DES\	9018967R.DOC	Traffic Control Plan	E 09/30/85 R 01/01/07
√	DES\	Adjustments-Reconstructs.doc	Adjustments and Reconstructions	E 03/15/11
	DES\	AGG SUBGR IMPROVEMENT(D1).doc	Aggregate Subgrade Improvement (D1)	E 02/22/12 R 04/01/16
	DES\	Bit_Coated_Agg_Slopewall.doc	Bituminous Coated Aggregate Slopewall	E 01/01/07
√	DES\	CA Backfill Trench Backfill Bedding (D1).doc	Coarse Aggregate for Backfill, Trench Backfill and Bedding (D-1)	E 11/01/11 R 11/01/13
	DES\	Conc_Noise_Abate_Wall(D1).docx	Concrete Noise Abatement Walls (Absorptive & Reflective)(Dist 1)	E 09/05/08 R 01/12/11
	DES\	Construction Layout Special For Resurfacing With ADA and Stand Alone ADA (D-1).docx	Construction Layout Special for resurfacing with ada and stand alone ada (D1)	E 01/01/17 R 04/17/17
	DES\	CTA_Flag_Coordination.doc	CTA Flagging and Coordination	E 05/14/98 R 08/27/09
	DES\	Detectable Warnings (Special) in City of Chicago (D-1).docx	Detectable Warnings (Special) in City of Chicago	E 07/20/17
√	DES\	Drain_Inlet_Prot_Undr_Traff(D1).doc	Drainage And Inlet Protection Under Traffic (D-1)	E 04/01/11 R 04/02/11
	DES\	Embankment_I.doc	Embankment I	E 03/01/11 R 11/01/13
	DES\	Embankment_II.doc	Embankment II	E 03/01/11 R 11/01/13

SPECIAL PROVISIONS CHECK LIST
Generated – 1/12/18 11:28 AM

Designer:	**BB&A**	**FAP:**	**345**
Contract No.:	**E-5-038**	**Section:**	**06-E5038-00-BR**
		County:	**Cook**

	DES\	ENG FIELD OFF TY A (SP).doc	Engineer's Field Office Type A (Special)	E 12/01/11 R 05/01/13
√	DES\	Friction Agg(D-1).doc	Friction Aggregate (D-1)	E 01/01/11 R 04/26/16
	DES\	Grade_Shape_Shldr.doc	Grading and Shaping Shoulders	E 12/28/01 R 01/01/07
√	DES\	GTR Modified Binder(D-1).doc	Ground Tire Rubber (GTR) Modified Asphalt Binder (D-1)	E 06/29/06 R 04/01/16
√	DES\	HMA Mix Des Reqmts(D-1).doc	HMA MIXTURE DESIGN REQUIREMENTS (D-1)	E 01/01/13 R 01/01/18
	DES\	Hot in Place Recycle.doc	Pavement Rehabilitation by Hot In-Place Recycling	E 07/11/03 R 05/05/14
	DES\	LightwtCellularConcFill(D1).docx	Lightweight Cellular Concrete Fill (D-1)	E 11/11/01 R 02/01/16
√	DES\	Pub_Conv_Sfty(D1).doc	Public Convenience and Safety (D-1)	E 05/01/12 R 07/15/12
√	DES\	RAP-RAS(D1).doc	Reclaimed Asphalt Pavement (RAP) and Reclaimed Asphalt Shingles (RAS) (D-1)	E 11/01/12 R 01/01/18
	DES\	Slipform Paving (D-1).doc	Slipform Paving (D-1)	E 11/01/14
	DES\	Status_Utility (D-1).doc	Status Of Utilities (D-1)	E 06/01/2016
	DES\	TEMP_PVMT.doc	Temporary Pavement	E 03/01/03 R 04/10/08
	DES\	WINTERIZED TEMP ACCESS 3-5-12.doc	Winterized Temporary Access	E 01/01/12 R 03/05/12

AGGREGATE FOR CONCRETE BARRIER (DISTRICT ONE)
Effective: February 11, 2004
Revised: January 24, 2008

Add the following paragraph to Article 637.02 of the Standard Specifications:

"The coarse aggregate to be used in the concrete barrier walls shall conform to the requirement for coarse aggregate used in Class BS concrete according to Article 1004.01(b), paragraph 2."

ADJUSTMENTS AND RECONSTRUCTIONS
Effective: March 15, 2011

Revise the first paragraph of Article 602.04 to read:

"**602.04 Concrete.** Cast-in-place concrete for structures shall be constructed of Class SI concrete according to the applicable portions of Section 503. Cast-in-place concrete for pavement patching around adjustments and reconstructions shall be constructed of Class PP-1 concrete, unless otherwise noted in the plans, according to the applicable portions of Section 1020."

Revise the third, fourth and fifth sentences of the second paragraph of Article 602.11(c) to read:

"Castings shall be set to the finished pavement elevation so that no subsequent adjustment will be necessary, and the space around the casting shall be filled with Class PP-1 concrete, unless otherwise noted in the plans, to the elevation of the surface of the base course or binder course. HMA surface or binder course material shall not be allowed. The pavement may be opened to traffic according to Article 701.17(e)(3)b."

Revise Article 603.05 to read:

"**603.05 Replacement of Existing Flexible Pavement.** After the castings have been adjusted, the surrounding space shall be filled with Class PP-1 concrete, unless otherwise noted in the plans, to the elevation of the surface of the base course or binder course. HMA surface or binder course material shall not be allowed. The pavement may be opened to traffic according to Article 701.17(e)(3)b."

Revise Article 603.06 to read:

"**603.06 Replacement of Existing Rigid Pavement.** After the castings have been adjusted, the pavement and HMA that was removed, shall be replaced with Class PP-1 concrete, unless otherwise noted in the plans, not less than 9 in. (225 mm) thick. The pavement may be opened to traffic according to Article 701.17(e)(3)b.

The surface of the Class PP concrete shall be constructed flush with the adjacent surface."

Revise the first sentence of Article 603.07 to read:

"**603.07 Protection Under Traffic.** After the casting has been adjusted and the Class PP concrete has been placed, the work shall be protected by a barricade and two lights according to Article 701.17(e)(3)b."

COARSE AGGREGATE FOR BACKFILL, TRENCH BACKFILL AND BEDDING (D-1)

Effective: November 1, 2011
Revised: November 1, 2013

This work shall be according to Section 1004.05 of the Standard Specifications except for the following:

Reclaimed Asphalt Pavement (RAP) maybe blended with gravel, crushed gravel, crushed stone crushed concrete, crushed slag, chats, crushed sand stone or wet bottom boiler slag. The RAP used shall be according to the current Bureau of Materials and Physical Research Policy Memorandum, "Reclaimed Asphalt Pavement (RAP) for Aggregate Applications". The RAP shall be uniformly graded and shall pass the 1.0 in. (25 mm) screen. When RAP is blended with any of the coarse aggregate listed above, the blending shall be done mechanically with calibrated feeders. The feeders shall have an accuracy of $\pm$ 2.0 percent of the actual quantity of material delivered. The final blended product shall not contain more than 40 percent by weight RAP.

The coarse aggregate listed above shall meet CA 6 and CA 10 gradations prior to being blended with the processed and uniformly graded RAP. Gradation deleterious count shall not exceed 10% of total RAP and 5% of other by total weight.

DRAINAGE AND INLET PROTECTION UNDER TRAFFIC (DISTRICT 1)

Effective: April 1, 2011
Revised: April 2, 2011

Add the following to Article 603.02 of the Standard Specifications:

"(i) Temporary Hot-Mix Asphalt (HMA) Ramp (Note 1) ……..... 1030
(j) Temporary Rubber Ramps (Note 2)

Note 1. The HMA shall have maximum aggregate size of 3/8 in. (95 mm).

Note 2. The rubber material shall be according to the following.

Property	Test Method	Requirement
Durometer Hardness, Shore A	ASTM D 2240	75 ±15
Tensile Strength, psi (kPa)	ASTM D 412	300 (2000) min
Elongation, percent	ASTM D 412	90 min
Specific Gravity	ASTM D 792	1.0 - 1.3
Brittleness, °F (°C)	ASTM D 746	-40 (-40)"

Revise Article 603.07 of the Standard Specifications to read:

"**603.07 Protection Under Traffic.** After the casting has been adjusted and the Class PP concrete has been placed, the work shall be protected by a barricade and two lights according to Article 701.17(e)(3)b.

When castings are under traffic before the final surfacing operation has been started, properly sized temporary ramps shall be placed around the drainage and/or utility castings according to the following methods.

(a) Temporary Asphalt Ramps. Temporary hot-mix asphalt ramps shall be placed around the casting, flush with its surface and decreasing to a featheredge in a distance of 2 ft (600 mm) around the entire surface of the casting.

(b) Temporary Rubber Ramps. Temporary rubber ramps shall only be used on roadways with permanent posted speeds of 40 mph or less and when the height of the casting to be protected meets the proper sizing requirements for the rubber ramps as shown below.

Dimension	Requirement
Inside Opening	Outside dimensions of casting + 1 in. (25 mm)
Thickness at inside edge	Height of casting ± 1/4 in. (6 mm)
Thickness at outside edge	1/4 in. (6 mm) max.

Width, measured from inside opening to outside edge	8 1/2 in. (215 mm) min

Placement shall be according to the manufacturer's specifications.

Temporary ramps for castings shall remain in place until surfacing operations are undertaken within the immediate area of the structure. Prior to placing the surface course, the temporary ramp shall be removed. Excess material shall be disposed of according to Article 202.03."

FRICTION AGGREGATE (D-1)

Effective: January 1, 2011
Revised: April 29, 2016

Revise Article 1004.03(a) of the Standard Specifications to read:

"**1004.03 Coarse Aggregate for Hot-Mix Asphalt (HMA).** The aggregate shall be according to Article 1004.01 and the following.

(a) Description. The coarse aggregate for HMA shall be according to the following table.

Use	Mixture	Aggregates Allowed
Class A	Seal or Cover	Allowed Alone or in Combination [5/]: Gravel Crushed Gravel Carbonate Crushed Stone Crystalline Crushed Stone Crushed Sandstone Crushed Slag (ACBF) Crushed Steel Slag Crushed Concrete

Use	Mixture	Aggregates Allowed
HMA Low ESAL	Stabilized Subbase or Shoulders	Allowed Alone or in Combination [5/]: Gravel Crushed Gravel Carbonate Crushed Stone Crystalline Crushed Stone Crushed Sandstone Crushed Slag (ACBF) Crushed Steel Slag[1/] Crushed Concrete
HMA High ESAL Low ESAL	Binder IL-19.0 or IL-19.0L SMA Binder	Allowed Alone or in Combination [5/ 6/]: Crushed Gravel Carbonate Crushed Stone[2/] Crystalline Crushed Stone Crushed Sandstone Crushed Slag (ACBF) Crushed Concrete[3/]
HMA High ESAL Low ESAL	C Surface and Leveling Binder IL-9.5 or IL-9.5L SMA Ndesign 50 Surface	Allowed Alone or in Combination [5/]: Crushed Gravel Carbonate Crushed Stone[2/] Crystalline Crushed Stone Crushed Sandstone Crushed Slag (ACBF) Crushed Steel Slag[4/] Crushed Concrete[3/]

<table>
<tr><th>Use</th><th>Mixture</th><th colspan="2">Aggregates Allowed</th></tr>
<tr><td rowspan="5">HMA
High ESAL</td><td rowspan="5">D Surface and Leveling Binder
IL-9.5

SMA
Ndesign 50
Surface</td><td colspan="2"><u>Allowed Alone or in Combination</u> [5/]:

Crushed Gravel
Carbonate Crushed Stone (other than Limestone)[2/]
Crystalline Crushed Stone
Crushed Sandstone
Crushed Slag (ACBF)
Crushed Steel Slag[4/]
Crushed Concrete[3/]</td></tr>
<tr><td colspan="2"><u>Other Combinations Allowed:</u></td></tr>
<tr><td>Up to...</td><td>With...</td></tr>
<tr><td>25% Limestone</td><td>Dolomite</td></tr>
<tr><td>50% Limestone</td><td>Any Mixture D aggregate other than Dolomite</td></tr>
<tr><td rowspan="5">HMA
High ESAL</td><td rowspan="5">E Surface
IL-9.5

SMA
Ndesign 80
Surface</td><td colspan="2"><u>Allowed Alone or in Combination</u> [5/ 6/]:

Crystalline Crushed Stone
Crushed Sandstone
Crushed Slag (ACBF)
Crushed Steel Slag

No Limestone.</td></tr>
<tr><td colspan="2"><u>Other Combinations Allowed:</u></td></tr>
<tr><td>Up to...</td><td>With...</td></tr>
<tr><td>50% Dolomite[2/]</td><td>Any Mixture E aggregate</td></tr>
<tr><td>75% Dolomite[2/]</td><td>Crushed Sandstone, Crushed Slag (ACBF), Crushed Steel Slag, or Crystalline Crushed Stone</td></tr>
<tr><td>75% Crushed Gravel[2/] or Crushed Concrete[3/]</td><td>Crushed Sandstone, Crystalline Crushed Stone, Crushed Slag (ACBF), or Crushed Steel Slag</td></tr>
</table>

<table>
<tr><th>Use</th><th>Mixture</th><th colspan="2">Aggregates Allowed</th></tr>
<tr><td rowspan="4">HMA
High ESAL</td><td rowspan="4">F Surface
IL-9.5

SMA
Ndesign 80
Surface</td><td colspan="2"><u>Allowed Alone or in Combination</u> [5/ 6/]:

Crystalline Crushed Stone
Crushed Sandstone
Crushed Slag (ACBF)
Crushed Steel Slag
No Limestone.</td></tr>
<tr><td colspan="2"><u>Other Combinations Allowed</u>:</td></tr>
<tr><td>Up to...</td><td>With...</td></tr>
<tr><td>50% Crushed Gravel[2/], Crushed Concrete[3/], or Dolomite[2/]</td><td>Crushed Sandstone, Crushed Slag (ACBF), Crushed Steel Slag, or Crystalline Crushed Stone</td></tr>
</table>

1/ Crushed steel slag allowed in shoulder surface only.
2/ Carbonate crushed stone (limestone) and/or crushed gravel shall not be used in SMA Ndesign 80. In SMA Ndesign 50, carbonate crushed stone shall not be blended with any of the other aggregates allowed alone in Ndesign 50 SMA binder or Ndesign 50 SMA surface.
3/ Crushed concrete will not be permitted in SMA mixes.
4/ Crushed steel slag shall not be used as leveling binder.
5/ When combinations of aggregates are used, the blend percent measurements shall be by volume."
6/ Combining different types of aggregate will not be permitted in SMA Ndesign 80."

GROUND TIRE RUBBER (GTR) MODIFIED ASPHALT BINDER (D-1)
Effective: June 26, 2006
Revised: April 1, 2016

Add the following to the end of article 1032.05 of the Standard Specifications:

"(c) Ground Tire Rubber (GTR) Modified Asphalt Binder. A quantity of 10.0 to 14.0 percent GTR (Note 1) shall be blended by dry unit weight with a PG 64-28 to make a GTR 70-28 or a PG 58-28 to make a GTR 64-28. The base PG 64-28 and PG 58-28 asphalt binders shall meet the requirements of Article 1032.05(a). Compatible polymers may be added during production. The GTR modified asphalt binder shall meet the requirements of the following table.

Test	Asphalt Grade GTR 70-28	Asphalt Grade GTR 64-28
Flash Point (C.O.C.), AASHTO T 48, °F (°C), min.	450 (232)	450 (232)
Rotational Viscosity, AASHTO T 316 @ 275 °F (135 °C), Poises, Pa·s, max.	30 (3)	30 (3)
Softening Point, AASHTO T 53, °F (°C), min.	135 (57)	130 (54)
Elastic Recovery, ASTM D 6084, Procedure A (sieve waived) @ 77 °F, (25 °C), aged, ss, 100 mm elongation, 5 cm/min., cut immediately, %, min.	65	65

Note 1. GTR shall be produced from processing automobile and/or light truck tires by the ambient grinding method. GTR shall not exceed 1/16 in. (2 mm) in any dimension and shall contain no free metal particles or other materials. A mineral powder (such as talc) meeting the requirements of AASHTO M 17 may be added, up to a maximum of four percent by weight of GTR to reduce sticking and caking of the GTR particles. When tested in accordance with Illinois modified AASHTO T 27, *a* 50 g sample of the GTR shall conform to the following gradation requirements:

Sieve Size	Percent Passing
No. 16 (1.18 mm)	100
No. 30 (600 μm)	95 ± 5
No. 50 (300 μm)	> 20

Add the following to the end of Note 1. of article 1030.03 of the Standard Specifications:

"A dedicated storage tank for the Ground Tire Rubber (GTR) modified asphalt binder shall be provided. This tank must be capable of providing continuous mechanical mixing throughout by continuous agitation and recirculation of the asphalt binder to provide a uniform mixture. The tank shall be heated and capable of maintaining the temperature of the asphalt binder at 300 °F to 350 °F (149 °C to 177 °C). The asphalt binder metering systems of dryer drum plants

shall be calibrated with the actual GTR modified asphalt binder material with an accuracy of ± 0.40 percent."

Revise 1030.02(c) of the Standard Specifications to read:

"(c) RAP Materials (Note 5) ……..…..1031"

Add the following note to 1030.02 of the Standard Specifications:

Note 5. When using reclaimed asphalt pavement and/or reclaimed asphalt shingles, the maximum asphalt binder replacement percentage shall be according to the most recent special provision for recycled materials.

HMA MIXTURE DESIGN REQUIREMENTS (D-1)

Effective: January 1, 2013
Revised: April 1, 2016

1) Design Composition and Volumetric Requirements

Revise the table in Article 406.06(d) of the Standard Specifications to read:

"MINIMUM COMPACTED LIFT THICKNESS	
Mixture Composition	Thickness, in. (mm)
IL-4.75	3/4 (19)
SMA-9.5, IL-9.5, IL-9.5L	1 1/2 (38)
SMA-12.5	2 (50)
IL-19.0, IL-19.0L	2 1/4 (57)"

Revise the table in Article 1004.03(c) of the Standard Specifications to read:

"Use	Size/Application	Gradation No.
Class A-1, 2, & 3	3/8 in. (10 mm) Seal	CA 16
Class A-1	1/2 in. (13 mm) Seal	CA 15
Class A-2 & 3	Cover	CA 14
HMA High ESAL	IL-19.0 IL-9.5	CA 11 1/ CA 16, CA 13 3/
HMA Low ESAL	IL-19.0L IL-9.5L Stabilized Subbase or Shoulders	CA 11 1/ CA 16
SMA 2/	1/2 in. (12.5mm) Binder & Surface IL 9.5 Surface	CA13 3/, CA14 or CA16 CA16, CA 13 3/

1/ CA 16 or CA 13 may be blended with the gradations listed.
2/ The coarse aggregates used shall be capable of being combined with stone sand, slag sand, or steel slag sand meeting the FA/FM 20 gradation and mineral filler to meet the approved mix design and the mix requirements noted herein.
3/ CA 13 shall be 100 percent passing the 1/2 in. (12.5mm) sieve.

Revise Article 1004.03(e) of the Supplemental Specifications to read:

"(e) Absorption. For SMA the coarse aggregate shall also have water absorption ≤ 2.0 percent."

Revise the last paragraph of Article 1102.01 (a) (5) of the Standard Specifications to read:

"IL-4.75 and Stone Matrix Asphalt (SMA) mixtures which contain aggregate having absorptions greater than or equal to 2.0 percent, or which contain steal slag sand, shall have minimum surge bin storage plus haul time of 1.5 hours."

Revise the nomenclature table in Article 1030.01 of the Standard Specifications to read:

"High ESAL	IL-19.0 binder; IL-9.5 surface; IL-4.75; SMA-12.5, SMA-9.5
Low ESAL	IL-19.0L binder; IL-9.5L surface; Stabilized Subbase (HMA)[1/]; HMA Shoulders[2/]

1/ Uses 19.0L binder mix.

2/ Uses 19.0L for lower lifts and 9.5L for surface lift."

Revise Article 1030.02 of the Standard Specifications and Supplemental Specifications to read:

"**1030.02 Materials.** Materials shall be according to the following.

Item	Article/Section
(a) Coarse Aggregate	1004.03
(b) Fine Aggregate	1003.03
(c) RAP Material	1031
(d) Mineral Filler	1011
(e) Hydrated Lime	1012.01
(f) Slaked Quicklime (Note 1)	
(g) Performance Graded Asphalt Binder (Note 2)	1032
(h) Fibers (Note 3)	
(i) Warm Mix Asphalt (WMA) Technologies (Note 4)	

Note 1. Slaked quicklime shall be according to ASTM C 5.

Note 2. The asphalt binder shall be an SBS PG 76-28 when the SMA is used on a full-depth asphalt pavement and SBS PG 76-22 when used as an overlay, except where modified herein. The asphalt binder shall be an Elvaloy or SBS PG 76-22 for IL-4.75, except where modified herein. The elastic recovery shall be a minimum of 80.

Note 3. A stabilizing additive such as cellulose or mineral fiber shall be added to the SMA mixture according to Illinois Modified AASHTO M 325. The stabilizing additive shall meet the Fiber Quality Requirements listed in Illinois Modified AASHTO M 325. Prior to approval and use of fibers, the Contractor shall submit a notarized certification by the producer of these materials stating they meet these requirements. Reclaimed Asphalt Shingles (RAS) may be used in Stone Matrix Asphalt (SMA) mixtures designed with an SBA polymer modifier as a fiber additive if the mix design with RAS included meets AASHTO T305 requirements. The RAS shall be from a certified source that produces either Type I or Type 2. Material shall meet requirements noted herein and the actual dosage rate will be determined by the Engineer.

Note 4. Warm mix additives or foaming processes shall be selected from the current Bureau of Materials and Physical Research Approved List, "Warm Mix Asphalt Technologies"."

Revise Article 1030.04(a)(1) of the Standard Specifications and the Supplemental Specifications to read:

"(1) High ESAL Mixtures. The Job Mix Formula (JMF) shall fall within the following limits.

High ESAL, MIXTURE COMPOSITION (% PASSING) [1/]										
Sieve Size	IL-19.0 mm		SMA [4/] IL-12.5 mm		SMA [4/] IL-9.5 mm		IL-9.5 mm		IL-4.75 mm	
	min	max	min	max	min	max	min	max	min	max
1 1/2 in (37.5 mm)										
1 in. (25 mm)		100								
3/4 in. (19 mm)	90	100		100						
1/2 in. (12.5 mm)	75	89	80	100		100		100		100
3/8 in. (9.5 mm)				65	90	100	90	100		100
#4 (4.75 mm)	40	60	20	30	36	50	34	69	90	100
#8 (2.36 mm)	20	42	16	24 [5/]	16	32 [5/]	34 [6/]	52 [2/]	70	90
#16 (1.18 mm)	15	30					10	32	50	65
#30 (600 μm)			12	16	12	18				
#50 (300 μm)	6	15					4	15	15	30
#100 (150 μm)	4	9					3	10	10	18
#200 (75 μm)	3	6	7.0	9.0 [3/]	7.5	9.5 [3/]	4	6	7	9 [3/]
Ratio Dust/Asphalt Binder		1.0		1.5		1.5		1.0		1.0

1/ Based on percent of total aggregate weight.

2/ The mixture composition shall not exceed 44 percent passing the #8 (2.36 mm) sieve for surface courses with Ndesign = 90.

3/ Additional minus No. 200 (0.075 mm) material required by the mix design shall be mineral filler, unless otherwise approved by the Engineer.

4/ The maximum percent passing the #635 (20 μm) sieve shall be ≤ 3 percent.

5/ When establishing the Adjusted Job Mix Formula (AJMF) the percent passing the #8 (2.36 mm) sieve shall not be adjusted above the percentage stated on the table.

6/ When establishing the Adjusted Job Mix Formula (AJMF) the percent passing the #8 (2.36 mm) sieve shall not be adjusted below 34 percent.

Revise Article 1030.04(b)(1) of the Standard Specifications to read:

"(1) High ESAL Mixtures. The target value for the air voids of the HMA shall be 4.0 percent and for IL-4.75 it shall be 3.5 percent at the design number of gyrations. The VMA and VFA of the HMA design shall be based on the nominal maximum size of the aggregate in the mix, and shall conform to the following requirements.

VOLUMETRIC REQUIREMENTS High ESAL				
	Voids in the Mineral Aggregate (VMA), % minimum			Voids Filled with Asphalt Binder (VFA), %
Ndesign	IL-19.0	IL-9.5	IL-4.75[1/]	
50	13.5	15.0	18.5	65 – 78 [2/]
70				65 - 75
90				

1/ Maximum Draindown for IL-4.75 shall be 0.3 percent

2/ VFA for IL-4.75 shall be 72-85 percent"

Replace Article 1030.04(b)(3) of the Standard Specifications with the following:

"(3) SMA Mixtures.

Volumetric Requirements SMA [1/]			
Ndesign	Design Air Voids Target %	Voids in the Mineral Aggregate (VMA), % min.	Voids Filled with Asphalt (VFA), %
80 [4/]	3.5	17.0 [2/] 16.0 [3/]	75 - 83

1/ Maximum draindown shall be 0.3 percent. The draindown shall be determined at the JMF asphalt binder content at the mixing temperature plus 30 °F.

2/ Applies when specific gravity of coarse aggregate is ≥ 2.760.

3/ Applies when specific gravity of coarse aggregate is < 2.760.

4/ Blending of different types of aggregate will not be permitted.
For surface course, the coarse aggregate can be crushed steel slag, crystalline crushed stone or crushed sandstone. For binder course, coarse aggregate shall be crushed stone (dolomite), crushed gravel, crystalline crushed stone, or crushed sandstone.

Add to the end of Article 1030.05 (d) (2) a. of the Standard Specifications:

"During production, the Contractor shall test SMA mixtures for draindown according to AASHTO T305 at a frequency of 1 per day of production."

Delete last sentence of the second paragraph of Article 1102.01(a) (4) b. 2.

Add to the end of Article 1102.01 (a) (4) b. 2.:

"As an option, collected dust (baghouse) may be used in lieu of manufactured mineral filler according to the following:

(a.) Sufficient collected dust (baghouse) is available for production of the SMA mix for the entire project.

(b.) A mix design was prepared based on collected dust (baghouse).

2) Design Verification and Production

Revise Article 1030.04 (d) of the Standard Specifications to read:

"(d) Verification Testing. High ESAL, IL-4.75, and SMA mix designs submitted for verification will be tested to ensure that the resulting mix designs will pass the required criteria for the Hamburg Wheel Test (IL mod AASHTO T-324) and the Tensile Strength Test (IL mod AASHTO T-283). The Department will perform a verification test on gyratory specimens compacted by the Contractor. If the mix fails the Department's verification test, the Contractor shall make the necessary changes to the mix and resubmit compacted specimens to the Department for verification. If the mix fails again, the mix design will be rejected.

All new and renewal mix designs will be required to be tested, prior to submittal for Department verification and shall meet the following requirements:

(1) Hamburg Wheel Test criteria. The maximum allowable rut depth shall be 0.5 in. (12.5 mm). The minimum number of wheel passes at the 0.5 in. (12.5 mm) rut depth criteria shall be based on the high temperature binder grade of the mix as specified in the mix requirements table of the plans.

Illinois Modified AASHTO T 324 Requirements [1/]

Asphalt Binder Grade	# Repetitions	Max Rut Depth (mm)
PG 70 -XX (or higher)	20,000	12.5
PG 64 -XX (or lower)	10,000	12.5

1/ When produced at temperatures of 275 ± 5 °F (135 ± 3 °C) or less, loose Warm Mix Asphalt shall be oven aged at 270 ± 5 °F (132 ± 3 °C) for two hours prior to gyratory compaction of Hamburg Wheel specimens.

Note: For SMA Designs (N-80) the maximum rut depth is 6.0 mm at 20,000 repetitions. For IL 4.75mm Designs (N-50) the maximum rut depth is 9.0mm at 15,000 repetitions.

(2) Tensile Strength Criteria. The minimum allowable conditioned tensile strength shall be 60 psi (415 kPa) for non-polymer modified performance graded (PG) asphalt

binder and 80 psi (550 kPa) for polymer modified PG asphalt binder. The maximum allowable unconditioned tensile strength shall be 200 psi (1380 kPa)."

Production Testing. Revise first paragraph of Article 1030.06(a) of the Standard Specifications to read:

"(a) High ESAL, IL-4.75, WMA, and SMA Mixtures. For each contract, a 300 ton (275 metric tons) test strip, except for SMA mixtures it will be 400 ton (363 metric ton), will be required at the beginning of HMA production for each mixture with a quantity of 3000 tons (2750 metric tons) or more according to the Manual of Test Procedures for Materials "Hot Mix Asphalt Test Strip Procedures".

Add the following after the sixth paragraph in Article 1030.06 (a) of the Standard Specifications:

"The Hamburg Wheel test shall also be conducted on all HMA mixtures from a sample taken within the first 500 tons (450 metric tons) on the first day of production or during start up with a split reserved for the Department. The mix sample shall be tested according to the Illinois Modified AASHTO T 324 and shall meet the requirements specified herein. Mix production shall not exceed 1500 tons (1350 metric tons) or one day's production, whichever comes first, until the testing is completed and the mixture is found to be in conformance. The requirement to cease mix production may be waived if the plant produced mixture demonstrates conformance prior to start of mix production for a contract.
If the mixture fails to meet the Hamburg Wheel criteria, no further mixture will be accepted until the Contractor takes such action as is necessary to furnish a mixture meeting the criteria"

Method of Measurement:

Add the following after the fourth paragraph of Article 406.13 (b):

"The plan quantities of SMA mixtures shall be adjusted using the actual approved binder and surface Mix Design's G_{mb}."

Basis of Payment.

Replace the fourth paragraph of Article 406.14 of the Standard Specifications with the following:

"Stone matrix asphalt will be paid for at the contract unit price per ton (metric ton) for POLYMERIZED HOT-MIX ASPHALT SURFACE COURSE, STONE MATRIX ASPHALT, of the mixture composition and Ndesign specified; and POLYMERIZED HOT-MIX ASPHALT BINDER COURSE, STONE MATRIX ASPHALT, of the mixture composition and Ndesign specified."

RECLAIMED ASPHALT PAVEMENT AND RECLAIMED ASPHALT SHINGLES (BDE)

Effective: November 1, 2012
Revise: January 1, 2018

Revise Section 1031 of the Standard Specifications to read:

"**SECTION 1031. RECLAIMED ASPHALT PAVEMENT AND RECLAIMED ASPHALT SHINGLES**

1031.01 Description. Reclaimed asphalt pavement and reclaimed asphalt shingles shall be according to the following.

(a) Reclaimed Asphalt Pavement (RAP). RAP is the material produced by cold milling or crushing an existing hot-mix asphalt (HMA) pavement. The Contractor shall supply written documentation that the RAP originated from routes or airfields under federal, state, or local agency jurisdiction.

(b) Reclaimed Asphalt Shingles (RAS). Reclaimed asphalt shingles (RAS). RAS is from the processing and grinding of preconsumer or post-consumer shingles. RAS shall be a clean and uniform material with a maximum of 0.5 percent unacceptable material, as defined in Central Bureau of Materials Policy Memorandum, "Reclaimed Asphalt Shingle (RAS) Sources", by weight of RAS. All RAS used shall come from a Central Bureau of Materials approved processing facility where it shall be ground and processed to 100 percent passing the 3/8 in. (9.5 mm) sieve and 93 percent passing the #4 (4.75 mm) sieve based on a dry shake gradation. RAS shall be uniform in gradation and asphalt binder content and shall meet the testing requirements specified herein. In addition, RAS shall meet the following Type 1 or Type 2 requirements.

(1) Type 1. Type 1 RAS shall be processed, preconsumer asphalt shingles salvaged from the manufacture of residential asphalt roofing shingles.

(2) Type 2. Type 2 RAS shall be processed post-consumer shingles only, salvaged from residential, or four unit or less dwellings not subject to the National Emission Standards for Hazardous Air Pollutants (NESHAP).

1031.02 Stockpiles. RAP and RAS stockpiles shall be according to the following.

(a) RAP Stockpiles. The Contractor shall construct individual, sealed RAP stockpiles meeting one of the following definitions. No additional RAP shall be added to the pile after the pile has been sealed. Stockpiles shall be sufficiently separated to prevent intermingling at the base. Stockpiles shall be identified by signs indicating the type as listed below (i.e. "Homogeneous Surface").

Prior to milling, the Contractor shall request the District provide documentation on the quality of the RAP to clarify the appropriate stockpile

(1) Fractionated RAP (FRAP). FRAP shall consist of RAP from Class I, HMA (High and Low ESAL) mixtures. The coarse aggregate in FRAP shall be crushed aggregate and may represent more than one aggregate type and/or quality, but shall be at least C quality. All FRAP shall be fractionated prior to testing by screening into a minimum of two size fractions with the separation occurring on or between the #4 (4.75 mm) and 1/2 in. (12.5 mm) sieves. Agglomerations shall be minimized such that 100 percent of the RAP shall pass the sieve size specified below for the mix into which the FRAP will be incorporated.

Mixture FRAP will be used in:	Sieve Size that 100 % of FRAP Shall Pass
IL-19.0	1 1/2 in. (40 mm)
IL-9.5	3/4 in. (20 mm)
IL-4.75	1/2 in. (13 mm)

(2) Homogeneous. Homogeneous RAP stockpiles shall consist of RAP from Class I, HMA (High and Low ESAL) mixtures and represent: 1) the same aggregate quality, but shall be at least C quality; 2) the same type of crushed aggregate (either crushed natural aggregate, ACBF slag, or steel slag); 3) similar gradation; and 4) similar asphalt binder content. If approved by the Engineer, combined single pass surface/binder millings may be considered "homogeneous" with a quality rating dictated by the lowest coarse aggregate quality present in the mixture.

(3) Conglomerate. Conglomerate RAP stockpiles shall consist of RAP from Class I, HMA (High and Low ESAL) mixtures. The coarse aggregate in this RAP shall be crushed aggregate and may represent more than one aggregate type and/or quality, but shall be at least C quality. This RAP may have an inconsistent gradation and/or asphalt binder content prior to processing. All conglomerate RAP shall be processed prior to testing by crushing to where all RAP shall pass the 5/8 in. (16 mm) or smaller screen. Conglomerate RAP stockpiles shall not contain steel slag.

(4) Non-Quality. RAP stockpiles that do not meet the requirements of the stockpile categories listed above shall be classified as "Non-Quality".

RAP/FRAP containing contaminants, such as earth, brick, sand, concrete, sheet asphalt, bituminous surface treatment (i.e. chip seal), pavement fabric, joint sealants, etc., will be unacceptable unless the contaminants are removed to the satisfaction of the Engineer. Sheet asphalt shall be stockpiled separately.

(b) RAS Stockpiles. Type 1 and Type 2 RAS shall be stockpiled separately and shall not be intermingled. Each stockpile shall be signed indicating what type of RAS is present.

Unless otherwise specified by the Engineer, mechanically blending manufactured sand (FM 20 or FM 22) up to an equal weight of RAS with the processed RAS will be permitted to improve workability. The sand shall be "B Quality" or better from an

approved Aggregate Gradation Control System source. The sand shall be accounted for in the mix design and during HMA production.

Records identifying the shingle processing facility supplying the RAS, RAS type, and lot number shall be maintained by project contract number and kept for a minimum of three years.

1031.03 Testing. RAP/FRAP and RAS testing shall be according to the following.

(a) RAP/FRAP Testing. When used in HMA, the RAP/FRAP shall be sampled and tested either during or after stockpiling.

(1) During Stockpiling. For testing during stockpiling, washed extraction samples shall be run at the minimum frequency of one sample per 500 tons (450 metric tons) for the first 2000 tons (1800 metric tons) and one sample per 2000 tons (1800 metric tons) thereafter. A minimum of five tests shall be required for stockpiles less than 4000 tons (3600 metric tons).

(2) After Stockpiling. For testing after stockpiling, the Contractor shall submit a plan for approval to the District proposing a satisfactory method of sampling and testing the RAP/FRAP pile either in-situ or by restockpiling. The sampling plan shall meet the minimum frequency required above and detail the procedure used to obtain representative samples throughout the pile for testing.

Each sample shall be split to obtain two equal samples of test sample size. One of the two test samples from the final split shall be labeled and stored for Department use. The Contractor shall extract the other test sample according to Department procedure. The Engineer reserves the right to test any sample (split or Department-taken) to verify Contractor test results.

(b) RAS Testing. RAS or RAS blended with manufactured sand shall be sampled and tested during stockpiling according to Central Bureau of Materials Policy Memorandum, “Reclaimed Asphalt Shingle (RAS) Source”.

Samples shall be collected during stockpiling at the minimum frequency of one sample per 200 tons (180 metric tons) for the first 1000 tons (900 metric tons) and one sample per 250 tons (225 metric tons) thereafter. A minimum of five samples are required for stockpiles less than 1000 tons (900 metric tons). Once a ≤ 1000 ton (900 metric ton), five-sample/test stockpile has been established it shall be sealed. Additional incoming RAS or RAS blended with manufactured sand shall be stockpiled in a separate working pile as designated in the Quality Control plan and only added to the sealed stockpile when the test results of the working pile are complete and are found to meet the tolerances specified herein for the original sealed RAS stockpile.

Before testing, each sample shall be split to obtain two test samples. One of the two test samples from the final split shall be labeled and stored for Department use. The

Contractor shall perform a washed extraction and test for unacceptable materials on the other test sample according to Department procedures. The Engineer reserves the right to test any sample (split or Department-taken) to verify Contractor test results.

If the sampling and testing was performed at the shingle processing facility in accordance with the QC Plan, the Contractor shall obtain and make available all of the test results from start of the initial stockpile.

1031.04 Evaluation of Tests. Evaluation of test results shall be according to the following.

(a) Evaluation of RAP/FRAP Test Results. All of the extraction results shall be compiled and averaged for asphalt binder content and gradation, and when applicable G_{mm}. Individual extraction test results, when compared to the averages, will be accepted if within the tolerances listed below.

Parameter	FRAP/Homogeneous/ Conglomerate
1 in. (25 mm)	
1/2 in. (12.5 mm)	± 8 %
No. 4 (4.75 mm)	± 6 %
No. 8 (2.36 mm)	± 5 %
No. 16 (1.18 mm)	
No. 30 (600 µm)	± 5 %
No. 200 (75 µm)	± 2.0 %
Asphalt Binder	± 0.4 % 1/
G_{mm}	± 0.03

1/ The tolerance for FRAP shall be ± 0.3 %.

If more than 20 percent of the individual sieves and/or asphalt binder content tests are out of the above tolerances, the RAP/FRAP shall not be used in HMA unless the RAP/FRAP representing the failing tests is removed from the stockpile. All test data and acceptance ranges shall be sent to the District for evaluation.

With the approval of the Engineer, the ignition oven may be substituted for extractions according to the ITP, "Calibration of the Ignition Oven for the Purpose of Characterizing Reclaimed Asphalt Pavement (RAP)".

(b) Evaluation of RAS and RAS Blended with Manufactured Sand Test Results. All of the test results, with the exception of percent unacceptable materials, shall be compiled and averaged for asphalt binder content and gradation. Individual test results, when compared to the averages, will be accepted if within the tolerances listed below.

Parameter	RAS
No. 8 (2.36 mm)	± 5 %

No. 16 (1.18 mm)	± 5 %
No. 30 (600 µm)	± 4 %
No. 200 (75 µm)	± 2.0 %
Asphalt Binder Content	± 1.5 %

If more than 20 percent of the individual sieves and/or asphalt binder content tests are out of the above tolerances, or if the percent unacceptable material exceeds 0.5 percent by weight of material retained on the # 4 (4.75 mm) sieve, the RAS or RAS blend shall not be used in Department projects. All test data and acceptance ranges shall be sent to the District for evaluation.

1031.05 Quality Designation of Aggregate in RAP/FRAP.

(a) RAP. The aggregate quality of the RAP for homogeneous and conglomerate stockpiles shall be set by the lowest quality of coarse aggregate in the RAP stockpile and are designated as follows.

(1) RAP from Class I, Superpave/HMA (High ESAL), or (Low ESAL) IL-9.5L surface mixtures are designated as containing Class B quality coarse aggregate.

(2) RAP from Class I binder, Superpave/HMA (High ESAL) binder, or (Low ESAL) IL-19.0L binder mixtures are designated as containing Class C quality coarse aggregate.

(b) FRAP. If the Engineer has documentation of the quality of the FRAP aggregate, the Contractor shall use the assigned quality provided by the Engineer.

If the quality is not known, the quality shall be determined as follows. Coarse and fine FRAP stockpiles containing plus #4 (4.75 mm) sieve coarse aggregate shall have a maximum tonnage of 5000 tons (4500 metric tons). The Contractor shall obtain a representative sample witnessed by the Engineer. The sample shall be a minimum of 50 lb (25 kg). The sample shall be extracted according to Illinois Modified AASHTO T 164 by a consultant laboratory prequalified by the Department for the specified testing. The consultant laboratory shall submit the test results along with the recovered aggregate to the District Office. The cost for this testing shall be paid by the Contractor. The District will forward the sample to the Central Bureau of Materials Aggregate Lab for MicroDeval Testing, according to ITP 327. A maximum loss of 15.0 percent will be applied for all HMA applications.

1031.06 Use of RAP/FRAP and/or RAS in HMA. The use of RAP/FRAP and/or RAS shall be the Contractor's option when constructing HMA in all contracts.

(a) RAP/FRAP. The use of RAP/FRAP in HMA shall be as follows.

(1) Coarse Aggregate Size. The coarse aggregate in all RAP shall be equal to or less than the nominal maximum size requirement for the HMA mixture to be produced.

(2) Steel Slag Stockpiles. Homogeneous RAP stockpiles containing steel slag will be approved for use in all HMA (High ESAL and Low ESAL) Surface and Binder Mixture applications.

(3) Use in HMA Surface Mixtures (High and Low ESAL). RAP/FRAP stockpiles for use in HMA surface mixtures (High and Low ESAL) shall be FRAP or homogeneous in which the coarse aggregate is Class B quality or better. FRAP from Conglomerate stockpiles shall be considered equivalent to limestone for frictional considerations. Known frictional contributions from plus #4 (4.75 mm) homogeneous FRAP stockpiles will be accounted for in meeting frictional requirements in the specified mixture.

(4) Use in HMA Binder Mixtures (High and Low ESAL), HMA Base Course, and HMA Base Course Widening. RAP/FRAP stockpiles for use in HMA binder mixtures (High and Low ESAL), HMA base course, and HMA base course widening shall be FRAP, homogeneous, or conglomerate, in which the coarse aggregate is Class C quality or better.

(5) Use in Shoulders and Subbase. RAP/FRAP stockpiles for use in HMA shoulders and stabilized subbase (HMA) shall be FRAP, homogeneous, or conglomerate.

(6) When the Contractor chooses the RAP option, the percentage of RAP shall not exceed the amounts indicated in Article 1031.06(c)(1) below for a given Ndesign.

(b) RAS. RAS meeting Type 1 or Type 2 requirements will be permitted in all HMA applications as specified herein.

(c) RAP/FRAP and/or RAS Usage Limits. Type 1 or Type 2 RAS may be used alone or in conjunction with RAP or FRAP in HMA mixtures up to a maximum of 5.0 percent by weight of the total mix.

(1) RAP/RAS. When RAP is used alone or RAP is used in conjunction with RAS, the percentage of virgin asphalt binder replacement shall not exceed the amounts listed in the Max RAP/RAS ABR table listed below for the given Ndesign.

RAP/RAS Maximum Asphalt Binder Replacement (ABR) Percentage

HMA Mixtures 1/, 2/	RAP/RAS Maximum ABR %		
Ndesign	Binder/Leveling Binder	Surface	Polymer Modified
30	30	30	10
50	25	15	10
70	15	10	10
90	10	10	10

1/ For Low ESAL HMA shoulder and stabilized subbase, the RAP/RAS ABR shall not exceed 50 percent of the mixture.

2/ When RAP/RAS ABR exceeds 20 percent, the high and low virgin asphalt binder grades shall each be reduced by one grade (i.e. 25 percent ABR would require a virgin asphalt binder grade of PG 64-22 to be reduced to a PG 58-28). If warm mix asphalt (WMA) technology is utilized and production temperatures do not exceed 275 °F (135 °C), the high and low virgin asphalt binder grades shall each be reduced by one grade when RAP/RAS ABR exceeds 25 percent (i.e. 26 percent RAP/RAS ABR would require a virgin asphalt binder grade of PG 64-22 to be reduced to a PG 58-28).

(2) FRAP/RAS. When FRAP is used alone or FRAP is used in conjunction with RAS, the percentage of virgin asphalt binder replacement shall not exceed the amounts listed in the FRAP/RAS table listed below for the given Ndesign.

FRAP/RAS Maximum Asphalt Binder Replacement (ABR) Percentage

HMA Mixtures 1/, 2/	FRAP/RAS Maximum ABR %		
Ndesign	Binder/Leveling Binder	Surface	Polymer Modified 3/, 4/
30	50	40	10
50	40	35	10
70	40	30	10
90	40	30	10

1/ For Low ESAL HMA shoulder and stabilized subbase, the FRAP/RAS ABR shall not exceed 50 percent of the mixture.

2/ When FRAP/RAS ABR exceeds 20 percent for all mixes, the high and low virgin asphalt binder grades shall each be reduced by one grade (i.e. 25 percent ABR would require a virgin asphalt binder grade of PG 64-22 to be reduced to a PG 58-28). If warm mix asphalt (WMA) technology is utilized and production temperatures do not exceed 275 °F (135 °C), the high and low virgin asphalt binder grades shall each be reduced by one grade when FRAP/RAS ABR exceeds 25 percent (i.e. 26 percent ABR would require a virgin asphalt binder grade of PG 64-22 to be reduced to a PG 58-28).

3/ For SMA the FRAP/RAS ABR shall not exceed 20 percent.

4/ For IL-4.75 mix the FRAP/RAS ABR shall not exceed 30 percent.

1031.07 HMA Mix Designs. At the Contractor's option, HMA mixtures may be constructed utilizing RAP/FRAP and/or RAS material meeting the detailed requirements specified herein

(a) RAP/FRAP and/or RAS. RAP/FRAP and/or RAS mix designs shall be submitted for verification. If additional RAP/FRAP and/or RAS stockpiles are tested and found that no more than 20 percent of the results, as defined under "Testing" herein, are outside of the control tolerances set for the original RAP/FRAP and/or RAS stockpile and HMA mix design, and meets all of the requirements herein, the additional RAP/FRAP and/or RAS stockpiles may be used in the original mix design at the percent previously verified.

(b) RAS. Type 1 and Type 2 RAS are not interchangeable in a mix design.

The RAP, FRAP, and RAS stone bulk specific gravities (G_{sb}) shall be according to the "Determination of Aggregate Bulk (Dry) Specific Gravity (G_{sb}) of Reclaimed Asphalt Pavement (RAP) and Reclaimed Asphalt Shingles (RAS)" procedure in the Department's Manual of Test Procedures for Materials.

1031.08 HMA Production. HMA production utilizing RAP/FRAP and/or RAS shall be as follows.

(a) RAP/FRAP. The coarse aggregate in all RAP/FRAP used shall be equal to or less than the nominal maximum size requirement for the HMA mixture being produced.

To remove or reduce agglomerated material, a scalping screen, gator, crushing unit, or comparable sizing device approved by the Engineer shall be used in the RAP feed system to remove or reduce oversized material.

If the RAP/FRAP control tolerances or QC/QA test results require corrective action, the Contractor shall cease production of the mixture containing RAP/FRAP and either switch to the virgin aggregate design or submit a new RAP/FRAP design.

(b) RAS. RAS shall be incorporated into the HMA mixture either by a separate weight depletion system or by using the RAP weigh belt. Either feed system shall be interlocked with the aggregate feed or weigh system to maintain correct proportions for all rates of production and batch sizes. The portion of RAS shall be controlled accurately to within ± 0.5 percent of the amount of RAS utilized. When using the weight depletion system, flow indicators or sensing devices shall be provided and interlocked with the plant controls such that the mixture production is halted when RAS flow is interrupted.

(c) RAP/FRAP and/or RAS. HMA plants utilizing RAP/FRAP and/or RAS shall be capable of automatically recording and printing the following information.

(1) Dryer Drum Plants.

a. Date, month, year, and time to the nearest minute for each print.

b. HMA mix number assigned by the Department.

c. Accumulated weight of dry aggregate (combined or individual) in tons
(metric tons) to the nearest 0.1 ton (0.1 metric ton).

d. Accumulated dry weight of RAP/FRAP/RAS in tons (metric tons) to the nearest
0.1 ton (0.1 metric ton).

e. Accumulated mineral filler in revolutions, tons (metric tons), etc. to the nearest
0.1 unit.

f. Accumulated asphalt binder in gallons (liters), tons (metric tons), etc. to the nearest 0.1 unit.

g. Residual asphalt binder in the RAP/FRAP material as a percent of the total mix to the nearest 0.1 percent.

h. Aggregate and RAP/FRAP moisture compensators in percent as set on the control panel. (Required when accumulated or individual aggregate and RAP/FRAP are printed in wet condition.)

(2) Batch
Plants.

a. Date, month, year, and time to the nearest minute for each

print. b. HMA mix number assigned by the Department.

c. Individual virgin aggregate hot bin batch weights to the nearest pound

(kilogram). d. Mineral filler weight to the nearest pound (kilogram).

e. RAP/FRAP/RAS weight to the nearest pound (kilogram).

f. Virgin asphalt binder weight to the nearest pound (kilogram).

g. Residual asphalt binder in the RAP/FRAP/RAS material as a percent of the total mix to the nearest 0.1 percent.

The printouts shall be maintained in a file at the plant for a minimum of one year or as directed by the Engineer and shall be made available upon request. The printing system will be inspected by the Engineer prior to production and verified at the beginning of each construction season thereafter.

1031.09 RAP in Aggregate Surface Course and Aggregate Wedge Shoulders, Type B. The use of RAP in aggregate surface course (temporary access entrances only) and aggregate wedge shoulders, Type B shall be as follows.

(a) Stockpiles and Testing. RAP stockpiles may be any of those listed in Article 1031.02, except “Non-Quality” and “FRAP”. The testing requirements of Article 1031.03 shall not apply. RAP used shall be according to the current Central Bureau of Materials Policy Memorandum, “Reclaimed Asphalt Pavement (RAP) for Aggregate Applications”.

(b) Gradation. One hundred percent of the RAP material shall pass the 1 1/2 in. (37.5 mm) sieve. The RAP material shall be reasonably well graded from coarse to fine. RAP material that is gap-graded or single sized will not be accepted.”

KEEPING ARTERIAL ROADWAYS OPEN TO TRAFFIC (LANE CLOSURES ONLY)
Effective: January 22, 2003
Revised: February 20, 2015

The Contractor shall provide the necessary traffic control devices to warn the public and to delineate the work zone as required in these Special Provisions, the Standard Specifications, the State Standards, and the District Details.

Arterial lane closures shall be in accordance with the Standard Specifications, Highway Standards, District Details, and the direction of the Engineer. The Contractor shall request and gain approval from the Illinois Department of Transportation's Arterial Traffic Control Supervisor at 847-705-4470 seventy–two (72) hours in advance of all long-term (24 hrs. or longer) lane closures. This advance notification is calculated based on a Monday through Friday workweek and shall not include weekends or state holidays.

Arterial lane closures not shown in the staging plans will not be permitted during **peak traffic volume hours**.

Peak traffic volume hours are defined as weekdays (Monday through Friday) from
7:00 AM to 9:00 AM and 4:00 PM to 6:00 PM.

Private vehicles shall not be parked in the work zone. Contractor's equipment and/or vehicles shall not be parked on the shoulders or in the median during non-working hours. The parking of equipment and/or vehicles on State right-of-way will only be permitted at locations approved by the Engineer in accordance with Articles 701.08 and 701.11 of the Standard Specifications.

Should the Contractor fail to completely open and keep open all the traffic lanes to traffic in accordance with the limitations specified above, the Contractor shall be liable to the Department for the amount of:

One lane or ramp blocked = $ 1,700/15 min

Two lanes blocked = $ 3,500/15 min

Not as a penalty but as liquidated and ascertained damages for each and every 15 minute interval or a portion thereof that a lane is blocked outside the allowable time limitations. Such damages may be deducted by the Department from any monies due the Contractor. These damages shall apply during the contract time and during any extensions of the contract time.

CHICAGO DEPARTMENT OF STREETS AND SANITATION / DIVISION OF ELECTRICAL OPERATIONS DETAILED SPECIFICATIONS

Item No.	Description
1351	WIRE
1458	ELECTRICAL MANHOLE FRAMES AND COVERS
1462	RIGID STEEL CONDUIT
1464	FUSES FOR STREET LIGHTING
1465	GROUND RODS
1467	ROD: ANCHOR, STEEL, WITH HARDWARE
1489	MAST ARM
1505	LIGHT POLE: CHICAGO 2000
1506	POLE: ORNAMENTAL
1513	SPLIT PEDESTAL BASE: FOR CHICAGO 2000 LIGHT POLE
1514	CHICAGO 2000 MAST ARM: 8-FT, STEEL
1528	PRECAST CONCRETE STRUCTURES
1533	NON-METALLIC CONDUIT
1534	CABLE: SINGLE CONDUCTOR, 600 Volt
1586	LUMINAIRE: LED, ORNAMENTAL, ARTERIAL ACORN
1589	TEARDROP LUMINAIRE, CHICAGO 2000, LED
1604	LUMINAIRE: LED, VIADUCT/ELEVATED STRUCTURE RETROFIT

ELECTRICAL SPECIFICATION 1351
DIVISION OF ELECTRICAL OPERATIONS
DEPARTMENT OF TRANSPORTATION
CITY OF CHICAGO
REVISED JUNE 7, 2006

WIRE: SINGLE CONDUCTOR NO. 12 COPPER WITH CROSS LINKED POLYETHYLENE INSULATION

SUBJECT

1. This specification states the requirements for insulated wire intended for use as a conductor to connect street light luminaires to aerial distribution wires or underground distribution cables in a street lighting circuit. This wire is also known as pole wire.

GENERAL

2. (a) Specifications. The cable shall conform in detail to the requirements herein stated and to the referenced specifications of the American Society for Testing and Materials (ASTM), the National Electric Code (NEC), Underwriters Laboratories (UL), the Insulated Cable Engineers Association (ICEA), and the National Electrical Manufacturers Association (NEMA), in which the most recently published revisions will govern.

(b) Acceptance. Cable not conforming to this specification will not be accepted.

(c) Sample. If requested by the Chief Procurement Officer, a three (3) foot sample of the cable intended to be provided under this specification , shall be submitted to the Engineer of Electricity within fifteen (15) business days after receipt of the request.

(d) Warranty. The manufacturer shall warrant the cable to be first class material throughout. The manufacturer will be responsible for any cable failing during normal and proper use within one (1) year after the date of installation. The manufacturer will provide replacement of any failed cable segment, from the point of normal termination to the next point of normal termination. There will be no cost to the City.

CABLE

3. (a) Construction. The cable shall consist of a coated copper conductor concentrically encased in a moisture resistant thermosetting plastic of cross linked polyethylene. The cable shall be listed with UL as Type RHW-2 or Type USE-2, and shall meet the NEC's requirements for these types of cable up to 90º C in wet or dry locations.

(b) Sealing. Both ends of each length of cable must be thoroughly sealed to prevent the entrance of moisture and other foreign matter.

(c) Color. All cables must use a carbon black pigmented cross linked polyethylene compound. Any other color must be an approved, permanent type coating applied to the carbon black insulation.

(d) Marking. The cable must be identified by a permanently inscribed legend in white lettering. The legend must have the following information at a minimum: 1/C #12AWG, 600V, XLPE, 90º, RHW-2 orUSE-2, manufacturer's name, date of manufacture. The legend must be repeated at approximately eighteen inch (18") intervals parallel to the longitudinal axis of the cable.

CONDUCTOR

4. (a) Material. Conductor shall be Number 12 AWG consisting of seven (7) strands of coated, annealed, copper wires (.0305 inch diameter) per ASTM-8, Class B.

(b) Resistivity. Conductor shall conform to the requirements of ASTM B-33.

(c) Coating. Conductor shall be tin coated in accordance with ASTM B-33.

INSULATION

5. (a) Type. The insulation shall be a cross linked polyethylene compound meeting the physical and electrical requirements herein specified and the requirements of NEMA WC-70 (ICEA S-95-658).

(b) Thickness. The insulation must be circular in cross section and have an average thickness of 45 mils. The thickness must not vary by more than plus or minus five percent (+/-5%).

(c) Physical Properties

Initial Values:

Tensile strength, minimum psi	2000
Elongation at rupture, minimum %	250

TESTS

6. (a) General. The tests required to determine compliance with this specification must be certified by the manufacturer or an independent testing facility. Before shipment, copies of the test reports must be forwarded to the Division of Engineering for approval. The City reserves the right to reject any cable failing to meet the requirements of the tests. Tests must be made in accordance with methods in ASTM D-470.

(b) Physical Properties

After Aging:

1. After 168 hours in oxygen bomb at a pressure of 80 psi and a temperature at 127º +/-1º C :

Tensile strength, minimum % of initial value	75
Elongation at rupture, minimum % of initial value	75

2. After 168 hours in an air oven at 121º +/-1ºC :

Tensile strength, minimum % of initial value	80
Elongation at rupture, minimum % of initial value	80

(c) Modulus Test. After initial conditioning period of four (4) minutes at a temperature of 150º C and at 100% elongation, the modulus must not be less than 110 pounds per square inch.

(d) Accelerated Water Absorption Characteristics.

1. Electrical Method. After twenty-four (24) hours immersion in tap water at 75º +/- 1º C, the specific inductive capacity of the insulation must not be more than 7. After a continued fourteen (14) day immersion, the specific inductive capacity must not be more than three percent (3%) higher than the value determined at the end of the first day, nor more than two percent (2%) higher than the value determined at the end of the seventh day.

2. Gravimetric Method. The insulation must not absorb more than five (5) milligrams of water per square inch of exposed surface area after immersion in distilled water at 70º C for a period of seven (7) days.

(e) Electrical Characteristics. Each completed length of insulated conductor must withstand a test voltage of 3000 volts AC for a period of five (5) minutes after immersion in water for not less than six (6) hours and while still immersed. After withstanding this dielectric test, the cable must have an insulation resistance constant of not less than 25,000.

(f) Cold Bend Test. The cable must pass the cold bend, long-time voltage test on short specimens as outlined in ASTM D-470.

(g) Reports Required. Test reports must include the physical properties, both initial and after aging, the accelerated water absorption characteristics, and the electrical characteristics.

PACKING

7. The cable must be delivered in coils containing five hundred (500) feet each. Each coil must be packed in individual dispenser cartons. Each carton must be labeled, identifying the cable type and size, manufacturer, and date of manufacture.

ELECTRICAL SPECIFICATION 1458
DIVISION OF ELECTRICAL OPERATIONS
DEPARTMENT OF TRANSPORTATION
CITY OF CHICAGO
REVISED JULY 10, 2006

ELECTRICAL MANHOLE FRAMES AND COVERS 24 INCH AND 30 INCH DIAMETER

SCOPE

1. This specification describes the requirements for both 24 inch and 30 inch round frames and covers. These frames and covers will be used for electrical manholes and handholes and will provide access to the interior of the manholes and handholes. The 24 inch frames and covers will be used in parkway and sidewalk areas. The 30 inch frames and covers will be used in streets and in driveways and will provide sufficient strength to withstand normal traffic conditions.

GENERAL REQUIREMENTS

2. (a) Conformance. The manhole frames and covers shall conform with every detail of the requirements herein stated and to the specifications and methods of test of the American Society for Testing and Materials cited by ASTM Designation Number in which the most recently published revision will govern.

(b) Acceptance. Frames and covers not conforming to this specification will not be accepted. The Commissioner of Transportation will have the final say as to whether or not the frames and covers meet specifications.

(c) Drawings. The drawings mentioned herein are drawings of the Department of Transportation, Division of Engineering, and must be interpreted as part of these specifications.

(d) Sample. Upon request, one complete manhole frame and cover of the manufacture intended to be furnished must be submitted within fifteen (15) business days after receipt of such a request from the Chief Procurement Officer. The samples must be delivered to the Division of Electrical Operations, 4101 South Cicero Avenue, Chicago, Illinois.

(e) Warranty. The manufacturer shall warrant that the frames and covers meet the specifications and warrant the frames and covers for a period of one (1) year from the date of delivery against defects which may occur during that period from normal and customary use. Any frame or cover which fails during this period must be replaced by the manufacturer at no cost to the City.

DESIGN

3. (a) The frames and covers shall each conform in detail to the designs shown on Drawings 872, 874 and 10927.

(b) Each frame and cover shall weigh approximately as shown on the drawings.

(c) Machining. The bearing surfaces of both the cover and the frame shall be machine finished as indicated on the drawings.

(d) Workmanship. The frames and covers must be mutually interchangeable size for size, so that each lid will fit every frame neatly without jamming and with only such clearance as the drawings indicate. In addition, 24" & 30" covers must fit existing 24" & 30" frames, as shown on drawings 872, 874 and 10927. The castings shall be neat, true to pattern and free from cracks and casting flaws. No welding of defective castings will be permitted nor must the castings be painted.

(e) Material. The frames and covers must be made of Class 30 Cast Iron described in the specifications for Gray Iron Castings of ASTM A48. No plugging of defective castings will be permitted.

TESTS

4. (a) Test bars of the metal used for the castings shall be made and tested for tensile and transverse strength in accordance with ASTM A48. The metal must be tested at the works of the manufacturer. The manufacturer must furnish a certified copy of all test data sheets to the City prior to delivery of the castings. Frames and covers shall each be considered a separate casting for determining the requirement of testing.

ELECTRICAL SPECIFICATION 1462

DIVISION OF ELECTRICAL OPERATIONS
DEPARTMENT OF TRANSPORTATION
CITY OF CHICAGO
REVISED AUGUST 3, 2006

RIGID STEEL CONDUIT
(HOT DIPPED GALVANIZED)

SCOPE

1. This specification describes rigid steel conduit, zinc coated. This specification also describes rigid steel conduit that is both zinc and PVC coated. The conduit will be used underground or on structure as a raceway for electrical cables.

GENERAL REQUIREMENTS

2. (a) Rigid steel conduit must be zinc coated by the hot-dip process. Conduit must be furnished in 10 foot lengths, threaded on each end and with one coupling attached to one end and a protective cap at the other end.

(b) The conduit shall be manufactured according to Underwriters Laboratories Standard U.L. - 6 and must meet ANSI Standard C 80.1 and the requirements of NEC Article 344. In addition, conduit must be recognized as an equipment grounding conductor as per NEC Article 250.118(2). There will be no exceptions to meeting these standards.

(c) Acceptance. Conduit not conforming to this specification will be rejected. The Commissioner will be the final judge in determining if the conduit meets the specification.

(d) Sample. If requested by the Chief Procurement Officer, a sample of conduit must be submitted to the Engineer of Electricity within fifteen (15) business days of receipt of such a request.

(e) Warranty. The manufacturer shall warrant the construction and performance of the conduit to meet the requirements of this specification and shall warrant all parts and components against defects due to design, workmanship, or material developing within a period of one (1) year after the conduit has been delivered.

STEEL

3. Conduit shall be formed from steel suitable for use as an electrical raceway. It shall be structurally sound so that it will hang straight and true when supported by hangers in accordance with Chicago electrical code requirements and shall be

capable of being field bent without deformation of the walls.

Conduit shall have a circular cross section sufficiently accurate to permit the cutting of threads in accordance with Table 2 and shall provide a uniform wall thickness throughout. All surfaces shall be smooth and free of injurious defects. The dimensions and weights of rigid steel conduit must be in accordance with Table 1.

THREADING AND CHAMFERING

4. Each length of conduit, and each nipple, elbow and bend must be threaded on both ends, and each end must be chamfered to remove burrs and sharp edges.

The number of threads per inch, and the length of the threaded portion at each end of each length of conduit, nipple and elbow must be as indicated in Table 2. The perfect thread must be tapered for its entire length, and the taper must be 3/4 inch per foot.

ZINC COATING

5. After all cutting, threading, and chamfering all conduit surfaces shall be thoroughly cleaned before application of zinc. The cleaning process shall leave the interior and exterior surfaces of the conduit in such a condition that the zinc will be firmly adherent and smooth.

The conduit must be hot dipped galvanized both inside and out to provide approximately two (2) ounces of zinc per square foot. This is equivalent to 3.4 mils of zinc coating. An additional interior coating to aid in the installation of wires is required.

COUPLINGS

6. (a) The outside surface of couplings shall be protected by means of a zinc coating. The zinc content of the coating on the outside surface must be equivalent to a minimum thickness of 3.4 mils.

(b) Couplings shall be so made that all threads will be covered when the coupling is pulled tight on standard conduit threads.

(c) Both ends of the coupling must be chamfered to prevent damage to the starting threads.

(d) The outside diameter, length and weight of coupling must be as indicated in Table 3.

(e) Couplings must be straight tapped, except that the 2 1/2 inch and larger sizes may be taper-tapped.

PVC COATED (WHEN SPECIFIED)

7. (a) Only hot dipped galvanized conduit, couplings, and fittings may be polyvinylchloride (PVC) coated.

(b) All conduit, couplings, and fittings must be cleaned before being coated.

(c) All conduit, couplings, and fittings must have a PVC coating applied to the exterior by dipping in liquid plastisol. The coating thickness must be a nominal 40 mils.

(d) All coated conduit, couplings, and fittings must conform to the requirements of NEMA Standard RN1- Section 3 , "External Coatings". The latest revision will apply.

PACKING AND IDENTIFICATION

8. The pipe shall be delivered in bundles. Each length of conduit must be marked with the manufacturer's name or trademark. Securely attached to each bundle at two (2) locations on the bundle must be a weather resistant tag containing the following information:

a. conduit size
b. footage of bundle
c. gross weight of bundle

Precaution will be taken by the contractor in handling during shipment or delivery of conduit, and any conduit found to be damaged will not be accepted.

TEST AND INSPECTION

9. Galvanized rigid conduit must be capable of being bent cold into a quarter of a circle around a mandrel, the radius of which is four times the nominal size of the conduit, without developing cracks at any portion and without opening the weld.

The protective coatings used on the outside and inside surfaces of rigid steel conduit must be sufficiently elastic to prevent their cracking or flaking off when a finished sample of 2 inch conduit is tested within one year after the time of manufacture, by bending it into a half of a circle around a mandrel, the radius of which is 3 1/2 inches.

Tests on sizes other than 1/2 inch may be conducted within one year after the time of manufacture. If such tests are conducted, the conduit must be bent into a quarter of a circle around a mandrel, the radius of which is six times the nominal size of the conduit.

One of the following three test methods shall be employed for measuring the thickness or extent of the external zinc coating on conduit:

(a) Magnetic test.
(b) Dropping test.
(c) Preece test (Material which will withstand four 1-minute immersions will be considered as meeting requirements as follows; the zinc content of the coating on the outside surface must be equivalent to a minimum thickness of 3.4 mils).

All tests and inspections must be made at the place of manufacture prior to shipment unless otherwise specified, and shall be so conducted as not to interfere with normal manufacturing processes.

Each length of conduit shall be examined visually both on the outside and inside to determine if the product is free from slivers, burrs, scale or other similar injurious defects (or a combination thereof), and if coverage of the coating is complete.

If any samples of rigid steel conduit tested as prescribed in this specification should fail, two additional samples must be tested, both of which must comply with the requirements of the specification.

All pipe which may develop any defect under tests, or which may before testing or on delivery be found defective, or not in accordance with these specifications, must be removed by the Contractor at his own expense; and such pipe so removed by the Contractor must be replaced by him within ten (10) days of such rejection with other pipe which will conform to these specifications.

TABLE 1

Design Dimension and Weights of Rigid Steel Conduit

Nominal or Size of Conduit	Inside Diameter	Outside Diameter	Wall Thickness	Length Without Coupling	Minimum Weight Trade of Ten Unit Lengthw/couplings
(Inches)	(Inches)	(Inches)	(Inches)	(Feet/Inches)	(Pounds)
1/2	0.622	0.840	0.109	9-11 1/4	79.00
3/4	0.824	1.050	0.113	9-11 1/4	105.0
1	1.049	1.315	0.133	9-11	153.0
1 1/4	1.380	1.660	0.140	9-11	201.0
1 1/2	1.610	1.900	0.145	9-11	249.0
2	2.067	2.375	0.154	9-11	334.0
2 1/2	2.469	2.875	0.203	9-10 1/2	527.0
3	3.068	3.500	0.216	9-10 1/2	690.0
3 1/2	3.548	4.000	0.226	9-10 1/4	831.0
4	4.026	4.500	0.237	9-10 1/4	982.0

NOTE: The applicable tolerances are:

Length: + 1/4 inch (without coupling)

Outside diameter: + 1/64 inch or -1/32 inch for the 1 1/2 inch and smaller sizes, ± 1 % for the 2 inch and larger sizes.

Wall thickness: - 12 1/2 %

TABLE 2

Dimensions of Threads

Nominal or Trade Size of Conduit (Inches)	Threads per Inch	Pitch Diameter at end of Thread (Inches) Tapered 3/4 Inch per foot	Length of Thread (Inches)	
			Effective L2	Overall L4
1/2	14	0.7584	0.53	0.78
3/4	14	0.9677	0.55	0.79
1	11 1/2	1.2136	0.68	0.98
1 1/4	11 1/2	1.5571	0.71	1.01
1 1/2	11 1/2	1.7961	0.72	1.03
2	11 1/2	2.2690	0.76	1.06
2 1/2	8	2.7195	1.14	1.57
3	8	3.3406	1.20	1.63
3 1/2	8	3.8375	1.25	1.68
4	8	4.3344	1.30	1.73

NOTE: The applicable tolerances are:

Threaded Length (L4 Col 5): Plus or minus one thread

Pitch Diameter (Col 3): Plus or minus one turn is the maximum variation permitted from the gaging face of the working thread gages. This is equivalent to plus or minus one and one half turns from basic dimensions, since a variation of plus or minus one half turn from basic dimensions is permitted in working gages.

TABLE 3

Designed Dimensions and Weights of Couplings

Nominal or Trade Size of Conduit (INCHES)	Outside Diameter (INCHES)	Minimum Length (INCHES)	Minimum Weight (POUNDS)
1/2	1.010	1-9/16	0.115
3/4	1.250	1-5/8	0.170
1	1.525	2	0.300
1 1/4	1.869	2-1/16	0.370
1 1/2	2.155	2-1/16	0.515
2	2.650	2 1/8	0.671
2 1/2	3.250	3-1/8	1.675
3	3.870	3-1/4	2.085
3 1/2	4.500	3-3/8	2.400
4	4.875	3-1/2	2.839

ELECTRICAL SPECIFICATION 1464
DIVISION OF ELECTRICAL OPERATIONS
DEPARTMENT OF TRANSPORTATION
CITY OF CHICAGO
NOVEMBER 24, 1992

FUSES FOR STREET LIGHTING

SUBJECT

1. This specification covers the requirements for fuses to be used to protect street lighting circuits and luminaires. The fuses will installed in the fixture on fuse blocks, or in-line in in-line fuse holders.

DESIGN

2. (a) Fuses shall be rated for H.I.D. ballast and street lighting protection.

(b) Fuses shall be fast acting, high interrupting capacity and current limiting.

(c) Fuses must be rated for 10A, 600 VAC and 100,000 AMPS symmetrical interrupting.

(d) Fuse dimensions must be 13/32" x 1-1/2".

(e) Fuses must be U.L. listed.

(f) Fuses shall be Buss fuse type KTK; Littlefuse type KLK; Gould (Chase-Shawmut) type CTK; or approved equal.

ELECTRICAL SPECIFICATION 1465
DIVISION OF ELECTRICAL OPERATIONS
DEPARTMENT OF TRANSPORTATION
CITY OF CHICAGO
REVISED JULY 12, 2006

GROUND RODS

SUBJECT

1. This specification states requirements for ground rods and clamps to be used for ground electrodes in street lighting, traffic signal, and miscellaneous electrical circuits.

GENERAL

2. (a) Ground rods must be copper clad, steel rods suitable for driving into the ground without deformation of the rod or scoring, separation or other deterioration of the copper cladding.

(b) Sample. If requested by the Chief Procurement Officer, the contractor must furnish one sample of the ground rod proposed to be furnished within fifteen (15) business days from receipt of such request. The sample ground rod must be delivered to the Division of Electrical Operations, 2451 S. Ashland Avenue, Chicago, Illinois 60608.

(c) Warranty. The manufacturer shall warrant every ground rod against defects due to design, workmanship, or material developing within a period of one (1) year after the ground rod has been accepted. Any ground rod which fails during this period must be replaced by the contractor without expense to the City. The Commissioner of Transportation or his duly authorized representative will be the sole judge in determining which replacements are to be made.

(d) The Commissioner will be the sole judge in determining whether the submitted ground rods meet the requirements of this specification. Ground rods not accepted must be removed at the sole expense of the contractor.

DESIGN

3. (a) The ground rods and couplings must meet the latest requirements of (National Electrical Manufacturer's Association) NEMA Standard GR-1, for copper bonded ground rod electrodes and couplings. The ground rods must also meet the requirements of (Underwriter's Laboratories) UL 467.

(b) Ground rods shall be made of steel core suitable for driving into the earth without deformation.

(c) A uniform covering of electrolytic copper, 10 mils in thickness, shall be metallically bonded to the steel core to provide a corrosion resistant, inseparable bond between the steel core and the copper overlay.

(d) The finished rod must be of uniform cross-section; straight, and free of nicks, cuts or protuberances.

(e) The rod must be pointed at one end and chamfered at the other.

(f) All ground rods must be three-quarter inches (3/4") in diameter. The length shall be as specified in the order or in the plans. The length and diameter of the rod and the manufacturer must be clearly and permanently marked near the top of the rod (chamfered end).

(g) All ground rods must have a ground clamp capable of accommodating a No. 6 AWG Copper Wire.

PACKING

4. (a) Ground rods must be packed in bundles with reinforced tape or plastic banding that will not damage the rods. Small bundles may then be bound in larger bundles held together with steel banding.

(b) Ground clamps must be packed in a suitable carton. The carton must be labeled to indicate the contents.

SPECIFICATION 1467
DIVISION OF ELECTRICAL OPERATIONS
DEPARTMENT OF TRANSPORTATION
CITY OF CHICAGO
MAY 12, 1993

ROD: ANCHOR, STEEL, WITH HARDWARE

SUBJECT

1. This specification states the requirements for steel anchor rods with hardware for street light pole foundations.

GENERAL

2. (a) Specifications. The anchor rods shall conform in detail to the requirements herein stated, and to the specifications of the American Society for Testing and Materials cited by ASTM Designation Number, of which the most recently published revision will govern.

(b) Drawing. The drawings mentioned herein are issued by the Department of Transportation, Division of Engineering, and are an integral part of this specification.

ANCHOR ROD

3. (a) Fabrication. Each anchor rod must be fabricated in conformity with City of Chicago drawings numbered 806, 811, 830 and 844.

(b) Material. The rods must be fabricated from cold rolled carbon steel bar meeting the requirements of ASTM Specification A-36, except that the Specification must be modified to provide a minimum yield point of 55,000 psi (379 MPa).

(c) Thread. The straight end of each rod must be threaded as shown on City of Chicago drawing for that size rod, and must be American Standard, National Coarse.

HARDWARE

4. Hardware furnished with the anchor rod shall be as shown on the applicable drawing. It must include two (2) hexagonal nuts, American Standard Regular, two (2) flat washers, type B, series W, and one (1) lock washer, steel, helical spring. The nuts must have a Class 2 or 3 fit.

FINISH

5. (a) Galvanizing. The threaded end of each rod must be hot dipped galvanized for the distance shown on the applicable drawing. The thickness of the galvanized coating must not be less than 0.0021 inches. Each hexagonal nut and washer must be galvanized to the minimum thickness required by ASTM A-153, Class C, or ASTM B-454, Class 50. After galvanization, each anchor rod and nut must have a mating fit equivalent to the American Standard Class 2 or 3 fit for nuts and bolts.

(b) Rust Inhibitor. With the hardware in place on the end of the bolt, the galvanized portion of the bolt must be coated with heavy No-Ox-Id or equal rust inhibiting greasy compound.

TESTS

6. At the discretion of the Commissioner, anchor rods and hardware furnished under this specification will be subject to testing to determine compliance with the materials physical requirements.

INSPECTION

7. Final inspection must be made at point of delivery. Any anchor rods and hardware rejected must be removed by the Contractor at his sole expense.

ELECTRICAL SPECIFICATION 1489
DIVISION OF ELECTRICAL OPERATIONS
DEPARTMENT OF TRANSPORTATION
CITY OF CHICAGO
JUNE 9, 1997

MAST ARM: ORNAMENTAL, FOR LOOP STYLE POLE, FOR MOUNTING TWO ACORN LUMINAIRES, ALUMINUM

SUBJECT

1. This specification states the requirements for an ornamental aluminum twin mast arm for supporting two acorn luminaires on both the Loop pole and the Extended Loop pole.

GENERAL

2. (a) Specifications. The mast arms shall conform in detail to the requirements herein stated, and to the Specifications and Methods of Test of the American Society for Testing and Materials cited by ASTM Designation Number, of which the most recently published revision will govern.

(b) Acceptance. Mast Arms not conforming to this specification will not be accepted.

(c) Drawings. The drawings mentioned herein are drawings of the Department of Transportation, Division of Engineering, being an integral part of this specification cooperating to state the necessary requirements.

(d) Bidders Drawings. Bidders must submit with their bids detailed scale drawings of the mast arms and attachments proposed as the means for attaching these mast arms to poles. The drawings must give every dimension necessary to show how the parts will fit each other and be properly held in assembly.

(e) Sample. One complete mast arm of the manufacture intended to be furnished must be submitted within fifteen (15) business days upon request of the Chief Procurement Officer.

(f) Warranty. The manufacturer shall warrant that the mast arms meet the requirements of this specification and shall warrant the mast arms against any defects or failures that may occur within one (1) year of acceptance. Any defective mast arm must be replaced by the manufacturer at no cost to the City.

DESIGN

3. (a) Each twin mast arm must be cast aluminum conforming to ASTM B26/B26M, Grade 319.

(b) It must conform in detail with the twin mast arm shown on Drawing 911.

(c) Castings must have smooth external surfaces free from protuberances, dents, cracks or other imperfections marring their appearance. Welding or plugging of casting defects is prohibited.

(d) Mast arms must be straight and true along both the longitudinal and vertical axis so that they will provide a perfect, parallel vertical mounting for the two luminaires.

(e) Mast arms must be structurally rigid so that when mounted on a mast, fitted with the capitals and luminaires shown on Drawing 911, and carrying two 4' x 14" banners with each top securely fastened to one side of the mast arm and each bottom securely fastened to the mast, neither an 80 m.p.h. AASHTO wind load, the vibration of a passing elevated train, nor the vibration of a heavily loaded vehicle will cause any twisting, racking or bouncing of the arm assembly in either the vertical or the horizontal plane.

(f) The mast arm attachment to the mast must provide the structural integrity to hold the mast arm firmly in place during the loading and vibration described above. Where set screws are used to secure the mast arm to the mast, a minimum of 3/16" thickness of metal must be provided where the set screws are inserted to minimize the possibility of stripping the threads when the set screws are tightened into place. The set screws must be 1/4" x 20 stainless steel Allen head screws and a minimum of three set screws must be provided.

(g) An access point near the top of the mast arm must be provided to facilitate wiring from the fixture to the mast handhole. The access point cover must be in architectural consonance with the mast arm and must be securely held in place with a minimum of two 1/4" x 20 stainless steel allen head set screws in a minimum of 3/16" thickness of metal. At this access point, a “J” hook must be provided to support the luminaire wiring so that rubbing on the interior raceway will be minimized.

(h) The interior of the mast arm must provide a smooth, burr-free raceway for the luminaire wiring.

(i) The mast arm must provide two 3"O.D. x 3" long tenons for attachment of the luminaires.

WELDING

4. (a) General. It is preferred that the mast arm be cast as a single unit. Where the Contractor proposes to provide separate castings which are welded together, the Contractor must provide detailed drawings and a sample for the specific written approval of the Commissioner. Appearance will be a major factor in the approval process.

(b) Standards. Every weld must be made in conformity with the proper interpretation of the standard welding symbols of the American Welding Society as indicated on the drawings. Additionally, each bidder must submit with his proposal drawing the sizes and types of welds, must state the type of electrode, and must describe the welding methods he proposes to employ in fabricating the mast arm.

(c) Certification. All welds must be made by personnel who are certified for that type of welding. Welding by non-certified personnel will not be allowed.

(d) All welds must be inspected for penetration, soundness and appearance by means of radiography.

PAINTING

5. (a) Oil and Grease Removal. All metal surfaces must be washed with an alkaline detergent to remove oils and grease.

(b) Chemical Pretreatment. The cleaned metal surfaces must then be treated with a hot, pressurized phosphate wash and must be dried by convection heat.

(c) Exterior and Interior Coat. A thermosetting, weathering, Polyester powder coat must be applied electrostatically to all cleaned and treated surfaces to a uniform eight-mil thickness in a one coat application. This powder coat must be cured in a convection oven at a minimum temperature of 400 degrees Fahrenheit to form a high molecular weight fusion bonded finish.

(d) Alternate Methods. Alternate painting methods may be reviewed and tested on a case by case basis. However, no painting method will be accepted unless the Commissioner judges such alternate to be equal to the coating herein specified.

(e) Durability. Both the exterior and interior coats must be capable of passing 1,000 hours of salt spray exposure as per ASTM B117 in a 5% Na Cl (by weight) solution at 95° Fahrenheit and 95% relative humidity without blistering. Before test, the panel must be scribed with an "X" down to bare metal.

(f) Coating Measurement. Measurement of coating thickness must be done in accordance with SSPC-Pa 2-73T, "Measurement of Dry Paint Thickness with Magnetic Gauges," except that the lowest "single spot measurement" in an area of

two square inches must be not less than 7.0 mils.

(g) Color. Color must be gloss black. A color sample must be submitted for approval prior to fabrication. The color sample must include the manufacturer's name and the manufacturer's color name as well as any other information which will be required to purchase the same color for the mast, mast arm and luminaires.

(h) Field Touch-up. The Contractor must supply a field touch-up kit for every 20 bases or fraction thereof. The kit must consist of a highly legible instruction sheet, one gallon of the recommended touch-up paint and all other material required to touch-up 20 mast arms.

TESTING

6. (a) General. All completed mast arms shall be available for testing. Unless specifically authorized in writing, all tests must be at the manufacturer's plant. A record of every test must be made and a certified copy of the test record must be submitted to the Commissioner before the arms are shipped.

(b) Requirements. The following tests must be included in the testing procedure:

1. Bar tests as outlined in ASTM B26/B26M.

2. With the mast arm rigidly secured to a tenon equivalent to that of the pole and using the normal mast arm mounting provision, a 300-pound test load must be applied perpendicular to one end of the mast arm in the vertical plane for approximately 60 seconds. The test must then be repeated on the other end of the mast arm.

3. The 300-pound test load must then be applied to one end of the mast arm to create a twisting moment on the arm for approximately 60 seconds. The test must then be repeated on the other end of the mast arm.

4. The 300-pound test load must then be applied perpendicular to one end of the mast arm in the horizontal plane for approximately 60 seconds. The test must then be repeated on the other end of the mast arm.

5. The mast arm mounting must not be adjusted or retightened during any of the above testing procedures.

ELECTRICAL SPECIFICATION 1505
DIVISION OF ELECTRICAL OPERATIONS
DEPARTMENT OF TRANSPORTATION
CITY OF CHICAGO
REVISED JULY 17, 2006

CHICAGO 2000 LIGHT POLE: ANCHOR BASE, 32'-6", 7 GAUGE FLUTED, TAPERED STEEL FOR 15" BOLT CIRCLE

SUBJECT

1. This specification states the requirements for an Anchor Base Chicago 2000 Light Pole. The pole must support single or twin, simplex mounted mast arm(s) and teardrop luminaire(s). A split pedestal base will be provided to cover the bottom nominal 40" of the pole. A finial will be mounted at the top of the pole. This pole will be served by underground cables.

SUBMITTAL INFORMATION REQUIRED

2. (a) Manufacturer's Certification of Compliance. The submittal information must include a written certification of compliance with this Specification from the Manufacturer.

(b) Manufacturer's Shop Drawings. Scaled manufacturer's shop drawings showing actual light pole dimensions, details, and welds. Shop drawings must be original engineering drawings created by the manufacturer; photocopied or scanned copies of the Standard Drawings will not be accepted, and will be rejected as an incomplete submittal. These drawings must also be submitted in electronic format in Microstation 95, if requested; failure to provide drawings in this format will be cause for rejecting the submittal.

Dimensions must include but will not be limited to: mast height, width, taper, and fluting; base plate length, width, thickness, and bolt circle; handhole length, width, and height above base plate; component attachment plan locations and heights above baseplate including simplex brackets, finial top, banner arms, and flower basket rosettes; and all decorative bracelet heights above base plate.

Details must include scaled and dimensioned plan views, front elevations, side elevations, and section views as required for components including but not limited to: handhole; simplex brackets; finial top; banner arm attachments and finials; flower basket rosettes; and all decorative bracelets. All components must be clearly identified on the drawings.

Welds must include but will not be limited to: locations, sizes, and types of welds in accordance with the WELDING Section of this Specification.

(c) Manufacturer's catalog cut sheets showing light pole designation(s), characteristics, and catalog number(s).

(d) Manufacturer's specifications including fabricating materials and processes.

(e) Manufacturer's written installation instructions and maintenance manuals including recommendations and/or procedures for storage, assembly, orientation, installation, component access and wiring, and numeric tolerances for torquing the foundation anchor bolts to the light pole base plate.

(f) Sample. If requested by the Chief Procurement Officer, one completely assembled anchor-base pole with integral components, or one mast head and finial, or ornamental bracelets, of the manufacture intended to be furnished, must be submitted for review within fifteen (15) business days from receipt of notice.

(g) Warranty. The manufacturer must warrant the performance and construction of these light poles to meet the requirements of this specification and must warrant all parts, components, and appurtenances against defects due to design, workmanship, or material developing within a period of three years after the light poles have been delivered. This will be interpreted particularly to mean structural or mechanical failure of any component, failure of any weld, or failure of any portion of the painting system. The warranty must be furnished in writing guaranteeing replacement, including shipment, free of charge to this Contract and to the City, of any light pole assembly, or any component parts thereof, which, as determined by the Commissioner, would develop aforesaid failures. The warranty must accompany submittal information. Any light pole or part thereof not performing as required or developing defects within this period, must be replaced by the manufacturer at no cost to the City. The Commissioner will be the sole judge in determining which replacements are to be made and the Commissioner's decision will be final. Any cost for the warranty as specified will be incidental to this contract.

GENERAL

3. (a) Products. Light pole masts and component equipment must be the products of a single, established manufacturer, and must be suitable for the service required. Light pole masts or component equipment items which are proposed as similar or identical must be the products of a single manufacturer. Masts will be manufactured by Union Metal Corporation, Valmont Industries Incorporated, or an approved equal.

(b) Specifications. The pole must conform in detail to the requirements herein stated, and to the Specifications and Methods of Test of the American Society for Testing and Materials cited by ASTM Designation Number, of which the most recently published revisions will govern. The pole must be manufactured in accordance

with AASHTO's 1994 version of the "Standard Specifications for Structural Supports for Highway Signs, Luminaires and Traffic Signals." The shaft and base plate assembly must be designed to meet AASHTO's 1994 criteria for 80 MPH wind loading with a 30% gust factor, for: twin gateway mast arms; twin gateway luminaires of not less than 65 pounds each and having an effective projected area (EPA) of not less than 1.70 square feet each; twin gateway luminaire fitters of not less than 50 pounds each and having an EPA of not less than 0.73 square feet each; twin banners 6 feet high by 1.5 feet wide each; and twin flower baskets weighing 75 pounds each and having an EPA of not less than 3.0 square feet each.

(c) Drawings. The drawings mentioned herein are drawings of the Department of Transportation being an integral part of this specification cooperating to state the necessary requirements.

(d) Design. The pole must conform in design and dimensions to corresponding Standard Drawings 930, 930C, and 724.

(e) Approval. Whenever "approval" and "approved" are used in this specification they will mean a written approval by the Commissioner to be secured prior to proceeding with manufacture of these light poles.

(f) Commissioner's Review. The Commissioner will be the sole judge in determining the submitted light pole compliance with this Specification. The Commissioner's decision will be final.

MAST

4. (a) Mast Size. The mast size must be nominally 32'-6" as shown on Standard Drawing 930. The mast diameter at the bottom must be 10".

(b) Mast Design. The mast must be tapered at 0.14" per foot. The 32'-6" long mast must be of monotube construction and must be rolled on a mandrel to provide a 16-flute pattern. The flutes must be neat, true to pattern, and free from cracks and flaws. Each mast must be straight and centered on its' longitudinal axis. The mast must utilize a single longitudinal weld, 70% minimum penetration, in accordance with the WELDING Section of this Specification. There must be no lateral welds in the mast other than at the base plate and at the flower basket rosettes.

(c) Material. The mast must be 7 gauge, high strength low alloy steel in accordance with ASTM A595, Grade A.

(d) Mast Base. The mast base must be a 1¼" thick steel plate of low alloy, high strength steel conforming to ASTM A 595, Grade C, ASTM A 588 or ASTM A 606.

1. The base must be attached to the mast so that the bearing surface of the base is at right angles to the longitudinal axis of the mast. The vertical center

line of the seam must be positioned 135 degrees counter-clockwise from the vertical center line of the mast arm support plates.

2. The mast must be inserted into the base to a maximum depth which will still allow for an adequate weld to be made between the bottom of the mast and the plate. A circumferential weld must be made between the mast and the base at both the top and underside of the plate.

3. The base plate must have four (4) 1 1/2" wide slots to accommodate 1 1/4" diameter anchor bolts. The slots must be a total of three inches long measured along the circumference. The mast must provide for mounting on a 15" bolt circle using 1 1/4" anchor bolts, nuts and washers provided by others. Any special hardware required to facilitate installation must be provided under this contract.

(e) Provision for Ground. A 1/2" - 13 square nut must be welded to the inside of the mast on the handhole entry frame for a ground connection.

(f) Entry. A vertical doorframe carrying a removable door providing access to the interior of the mast must be welded into a close fitting opening centered approximately 24" above the bottom of the base. The doorframe must be formed and welded of steel with cross section not less than 1-1/2" wide by 1/4" inch thick so as to adequately reinforce the opening of the mast. The internal horizontal clearance of the doorframe must be 4"; its internal vertical height must be 8". Its upper and lower ends must be semi-circular meeting its straight sides tangentially. The frame must have two welded tabs; one at the top and one at the bottom of the door frame. The top hole must be located 13/16 of an inch from the top of the opening. The bottom hole must be located 13/16 of an inch from the bottom of the opening. These tabs must be drilled to accept a 1/4 inch screw. Stainless steel spring clips must be mounted to the tabs. These clips must be made to accept 1/4"-20 machine screws. The entry must in all respects be identical to handhole openings on poles that have already been installed and accepted by the City.

(g) Door. The removable door must be formed of sheet steel approximately 1/8" thick. It must fit the doorframe closely and be dished so that it will stay in proper position even if its locking screws become slightly loosened. The door must be drilled top and bottom to accept the 1/4" - 20 hex head stainless steel screws which will fasten the door to the doorframe. All doors must be interchangeable. Doors must fit pole handholes of like poles that have already been installed and accepted by the City. Alternate methods will be subject to approval by the Commissioner or his fully authorized representative.

(h) Tag. A stainless steel tag must be attached to each pole immediately below the handhole by mechanical means and not by adhesive. The stainless steel tag must have an embossed legend which must include the pole outside diameter at the base, the overall length, and the gauge; i.e. 10" x 32'-6" - 7 gauge.

(i) Interchangeability. Each member including the handhole doors in the pole and all component equipment must be mutually interchangeable for assembly, so that no work will be required to make any member fit properly in the place of any other similar member of any other similar pole.

(j) Simplex Brackets. Two simplex mast arm support plates must be provided opposite each other as shown on the Drawings, and in accordance with Standard Drawing No. 659. The mast arm support plates must be made of cast steel conforming to the requirements for Grade 65-35 cast steel of ASTM A27, or equivalent, subject to approval. They must neatly fit the external surfaces of the fluted mast. Each mast arm support plate must have a hollow protuberance, the hole of which must be approximately equivalent to two (2) inches in diameter, extending into the interior of the pole providing a smooth surface for the lamp cables to rest upon. Each mast arm support plate must be designed so that it will carry the mast arm and hold it in the proper position for fastening the mast arm to the mast. The design of the mast arm support plates must be a two (2) bolt type as shown on Drawing No. 659. The brackets must be factory assembled to the mast. The finished mast must give the appearance of a single, homogeneous mast and the entire assembly must be structurally sound so that with the weight of the mast arm(s) and luminaire(s), the mast will not twist, rack, vibrate or otherwise deform when subjected to the severe vibrations of wind loading, passing elevated trains or heavily loaded vehicles.

(k) Flower Basket Rosettes. The pole must be equipped with flower basket rosettes welded to the pole at the factory. Other flower basket attachments are not integral to the pole and are optional.

(l) Luminaire Mounting Height. The luminaire mounting height indicates the height necessary to provide a distance of 30.0 feet from the top of the light pole foundation to the light source center of the luminaire.

BANNER AND BASKET ATTACHMENTS (Optional)

5. (a) Optional Attachments. Banner arm attachments and flower basket attachments must be provided as an option. These items must be provided only if ordered as a separate line item. All attachments must be manufactured to properly fit the pole shaft. All castings and parts must be permanently labeled on the back. The label must clearly identify the part and the pole it is to be used for.

(b) Banner Arms. Banner arms, bracelets, couplings, and hardware necessary to attach banners must be provided. The appearance and dimensions of these items are shown on Standard Drawings 930, 930B, and 930C. Unless otherwise noted, the banner arms must be constructed of a light weight material flexible enough to withstand the loads presented by the appropriate size banners under ASSTHO wind loadings. The banner arms must have an approximate outside diameter of 1-3/4".

(c) Flower Basket Attachments. The bracelet and all necessary hardware for attaching a flower basket must be provided. The appearance and dimensions of these items are shown on the Standard Drawings.

FINIAL TOP(Optional)

6. (a) Design. The finial mast top must include different pieces assembled together to resemble a single, uniform casting. The pieces must include a top, two side pieces and a side finial ball as shown on Standard Drawings 930, 930B, and 930C. Two sets of end covers for the arms should be included to accommodate the possible use of two arms. The top must be essentially conical with a globe-shaped lower-end and have a minimum wall thickness throughout of not less than 5/32 inches. The cone portion must meet the skirted portion of the top in a smooth filet, and the skirt must enclose the top 7/8 inches of the mast. Three stainless steel, or other similar approved material, set screws not less than 5/16 inches long must be equally spaced in tapped holes around the skirt and must hold the top securely in place atop the mast. The design of the top must be as shown on the Standard Drawings. All castings and parts must be permanently labeled on the back of the part. The part label must clearly identify the part and the pole it is intended for.
All mast heads and finials must have the appearance as shown on the Standard Drawings. The dimensions on the drawings are for attachment to the Chicago 2000 Gateway pole. Mast heads and finials for combination traffic poles, 11"or 12.5"poles, must be sized accordingly.

(b) Material (Aluminum Option) The top finial must be made of aluminum alloy 356-F per ASTM B108. The top must have smooth surfaces, neat edges and corners and be free of fins, holes or other casting flaws.

(c) Material (Fiberglass Option) The top finial must be fiberglass. The mast heads and finial must be manufactured by Shakespeare Company, W.J. Whatley, or an approved equal. Each piece must be formed of a fiberglass composite consisting of a polyester resin and containing a minimum of 65% fiberglass by weight. The resin must contain no clay fibers. The composite must be UV and weather resistant. The color must be gloss black. The resin must contain color pigment throughout. A finish coat of urethane enamel must be applied to the surfaces to a minimum dry thickness of 1.5 mils. All pieces must be assembled using stainless steel screws. The fiberglass must have stainless inserts for the screws. Alternate non-metallic materials may be considered.

(c) Finish. Tops must be painted as herein specified.

HARDWARE

7. All the hardware necessary to complete the assembly of the pole must be furnished. All hardware must be stainless steel, or equal corrosion-resistant metal, subject to approval.

WELDING

8. (a) General. Where welds are required and approved, each welded joint must be thoroughly cleaned of flux and spatter, and must be made in conformity with the standards of the American Welding Society. Each bidder must submit with his proposal a drawing showing the sizes and types of welds, in conformity with the proper interpretation of the standard welding symbols of the American Welding Society. The bidder's proposal must state the type of electrode and must describe the welding methods proposed for use in fabricating the pole.

(b) Certifications. Welders must have proper certification for the welding operations required. Welding by non-certified personnel will not be allowed. Certifications for welding personnel must be included with the submittal information package for review.

(c) Testing. All welds of 5% of the poles in every lot must be inspected for penetration and soundness of the welds by the magnetic particle inspection method or by radiography. Acceptance or rejection will be governed by the same conditions as in the TESTING Section. If the magnetic inspection process is used, the dry method with direct current must be employed. All transverse welds must be magnetized by the "prod" (Circular Magnetization) method. Longitudinal welds may be magnetized by either circular or longitudinal magnetization. Proposed weld inspection method must be included with the submittal information package for review.

PAINTING

9. (a) Oil and Grease Removal. All metal surfaces must be washed with an alkaline detergent to remove oils and grease.

(b) Metal Cleaning. All exterior metal surfaces must be cleaned by blasting with a combination of shot and grit to remove all dirt, mill scale, rust, corrosion, oxides and foreign matter and provide a "near white" surface in accordance with SSPCS-SP10. Included in this process, the pretreatment process and the painting process must be the interior base section of the mast to a minimum height of 12".

(c) Chemical Pretreatment. The cleaned metal surfaces must then be treated with a hot, pressurized iron phosphate wash and must be dried by convection heat.

(d) Exterior Coat. A thermosetting, weathering, Polyester powder coat must be applied electrostatically to all cleaned and treated surfaces to a uniform 8 mil thickness in

a one coat application. This powder coat must be cured in a convection oven at a minimum temperature of 400°F to form a high molecular weight fusion bonded finish.

(e) Alternate Methods. Alternate powder coat methods may be reviewed and tested on a case by case basis. However, no coating method will be accepted unless the Commissioner judges such alternate to be equal to the coating herein specified.

(f) Interior Coat. The interior metal surfaces must be powder coated with a thermoplastic hydrocarbon resin containing corrosion inhibitors. The resin must be formulated for full application over untreated metal surfaces. The resin must be applied at a temperature of approximately 200°F to a minimum thickness of 3 mils. The interior thermoplastic coat must overlap the interior, thermosetting base coat by approximately 6". Alternate interior coatings may be used subject to prior approval of the Commissioner.

(g) Durability. Both the exterior and interior coats must be capable of passing 1,000 hours of salt spray exposure per ASTM B117 in a 5% Na Cl (by weight) solution at 95°F and 95% relative humidity without blistering. Before test, the panel must be scribed with an "X" down to bare metal.

(h) Coating Measurement. Measurement of coating thickness must be done in accordance with SSPC-Pa 2-73T, "Measurement of Dry Paint Thickness with Magnetic Gauges," except that the lowest "single spot measurement" in an area of two square inches must be not less than 7.0 mils.

(i) Color. Color must be gloss black unless noted otherwise in the order. A 4" square color chip sample must be submitted for approval prior to fabrication. The chip sample must be of the same material as the pole mast, and must include the manufacturer's name and the manufacturer's color name as well. The sample must also include any other information required to purchase the same color for the mast arm(s), flower baskets, and the cast aluminum finial and split pedestal base.

STRUCTURAL REQUIREMENTS

10. (a) Calculations: The manufacturer must provide certified pole deflection calculations showing compliance with 1994 AASHTO wind loading requirements for 80 mph winds with 30% gusts. The calculations must be performed based on a completely assembled mid-block historic gateway lighting unit including shaft, mast arm(s), finial, luminaire(s), fitter(s), banners, and flower baskets, as specified herein. The structural calculations must be signed and sealed by a registered structural engineer.

(b) Parameters. The manufacturer must demonstrate that the light poles will meet or exceed the specified structural requirements under the following set of conditions. The manufacturer must provide structural calculations using published loading data as part of the submittal package, and must perform structural testing using actual

completed light pole masts from the specific order as part of the testing. The responsible material proposal must contain verification of structural performance with results equal to or better than those listed in these Specifications. Submittal information must include computer calculations based on the controlling given conditions which demonstrate achievement of all listed performance requirements. Computer calculations must be done in accordance with both 1994 AASHTO recommendations and the City of Chicago requirements. The program(s) used to perform the calculations must be identified in the submittal. The structural testing must include maximum deflection and set as well as listings of all indicated test loads.

(c) Verification of Data. All structural data must be based on the parameters listed above. This data must be verified by an independent testing laboratory or manufacturer's laboratory as approved by the Commissioner. All testing must be performed on completed light pole masts. Where this data causes the structural integrity to fall below the values required by this specification, additional masts must be tested in a manner acceptable to the Commissioner.

TESTING

11. (a) Testing. Structural testing must be conducted on five percent of the manufacturer's production masts for each order in which the quantity of masts is 20 or more. The testing must include coupon tests, load tests, and weld tests. All testing must be certified by the manufacturer, or an independent lab.

(b) The selection of pole masts must be a random selection from the entire completed lot of pole masts required for the Contract. Selections from partial lots will not be allowed.

(c) Coupon tests as outlined in ASTM A53 and A 595, A588, or A606.

(d) Load tests for masts. With base rigidly anchored, a test load of 1500 pounds must be applied at a point approximately two feet (2' - 0") from the free end. The load must be applied at right angles to the center line of the mast and in the same vertical plane. The deflection must not be greater than 30". Within one (1) minute after the test load is released, measurement must be made of the set taken by the mast. This set must not be greater than 2.5". The deflection measurement device must be reset to zero and the test load must be reapplied. The deflection must not change from the deflection noted in the first test by more than $\pm$5%. No measurable set must be noted within one (1) minute after test load is released. The mast must then be checked to insure that it is still securely fastened, that it is plumb, and that no cracks have developed in either the mast or base plate.

(e) Load tests for masts arm supports. With gateway mast arms rigidly anchored, a test load of 300 pounds must be applied to each mast arm at a point approximately seven feet (7' - 0") from the pole mast. The load must be applied at right angles to the center line of the mast arm and in the same vertical plane. Each mast arm support

must then be checked to insure that it is still securely fastened and that no cracks have developed in either mast arm support bracket or the weld.

(f) Load tests for flower basket rosettes. With base rigidly anchored, a test load of 150 pounds must be applied to each rosette ring. The load must be applied at right angles to the center line of the mast and in the same vertical plane. Each rosette must then be checked to insure that it is still securely fastened and that no cracks have developed in either the ring, rosette, or rosette weld.

(g) Weld tests as described in the WELDING Section of this Specification.

(h) Acceptance of Alternate or Corrected Equipment. Tests must be made on 5% of all masts in the order. If any of the masts fail to meet these specifications, an additional three masts must be tested for each failed mast. Should any of these additional masts fail to meet these specifications, the entire lot will be subject to rejection. The Commissioner will then decide, based on the nature of the failure, whether the entire lot will be rejected outright or whether the manufacturer may subject each mast in the order to testing. If each mast in the order is tested, those masts which fulfill the specified requirements may be accepted at the discretion of the Commissioner.

SHIPMENT AND DELIVERY

12. (a) General. The poles must be carefully inspected at the factory prior to shipment to assure that the poles are complete and free of defects. When poles are stacked together, they must be supported with suitable spacers or must otherwise be protected from dents and other potential shipping damage. The spacing and protective materials must be suitable for and usable in the storage of the poles. All pole hardware must be packaged in a clear container and labeled. Castings and parts must be packaged in clearly labeled boxes. Parts hardware must be packaged in clear containers, properly labeled.

(b) Pole Packaging. The poles must be shipped in bundles weighing a maximum of 5,000 pounds. Each pole must be individually wrapped and protected so that it can be bundled and unbundled without damage to the pole or its finish. Each pole wrapping must be labeled using permanent ink in two inch letters identifying the pole type, height, and gauge. Specific instructions must be securely attached to each bundle indicating the proper methods of storage. In addition, each bundle must contain specific instructions on unbundling and erection of poles. Instructions must be printed on a fiber based paper with a permanent ink so that instructions will be completely legible after weathering outdoors for a minimum of 5 years.

(c) Pole Bundles. The bundles must consist of poles laid base to top to form an approximately rectangular cylinder. Materials such as lumber (2" x 4" min.) non-marring banding, and other appropriate bundling materials must be used to make a rigid, long lasting bundle capable of being handled, shipped and stored without shifting of contents or breaking. Bundling procedure will be subject to approval.

Any bundles, in which either poles or packaging is received broken, damaged or with contents shifted, will not be accepted and it will be the responsibility of the supplier to return the bundle to its original destination at no cost to the City of Chicago. The bundles should be capable of being stacked two high without breaking, or shifting of the contents. Each bundle must be capable of being lifted by a fork lift truck or crane and the bundles must be shipped on a flatbed truck to facilitate unloading.

(d) Pole Hardware. Any appurtenant devices and hardware not attached to the pole must be carefully wrapped and securely attached to each bundle. Payment will be withheld for any units provided without the appropriate appurtenant devices and hardware. Cracked, broken, chipped or damaged units will also be considered as incomplete quantities as regards payment.

(e) Castings and Parts. Castings and parts, such as the finial, banner brackets,

ELECTRICAL SPECIFICATION 1506
DIVISION OF ELECTRICAL OPERATIONS
DEPARTMENT OF TRANSPORTATION
CITY OF CHICAGO
REVISED SEPTEMBER 24, 2001

POLE: ORNAMENTAL, EXTENDED LOOP STYLE, 16 FOOT 15" BOLT CIRCLE; STEEL, 7 GAUGE

SUBJECT

1. This specification states the requirements for an ornamental street light pole. These poles will support a twin mast arm bracket which will in turn, support two tenon mounted luminaires. A split pedestal base will cover the bottom of the pole. This pole will be served by underground cables. The luminaire mounting height will be 23 feet when the pole and arm are fully assembled.

GENERAL

2. (a) Specifications. The poles must conform in detail to the requirements herein stated, and to the Specifications and Methods of Test of the American Society for Testing and Materials cited by ASTM Designation Number of which the most recently published revisions will govern.

(b) Acceptance. Poles not conforming to this specification will not be accepted.

(c) Sample. One complete anchor-base pole of the manufacture intended to be furnished must be submitted within fifteen (15) business days upon receipt of notice from the Chief Procurement Officer.

(d) Drawings. The drawings mentioned herein are drawings of the Department of Transportation being an integral part of this specification cooperating to state the necessary requirements.

(e) Bidders Drawings. Bidders must submit with their bids scale drawings for the pole intended to be furnished. The drawings must show details of the pole design including the handholes, grounding and anchoring. Although the luminaires, the twin arm bracket, and the base are each covered by separate specifications, the drawings must include every dimension necessary to show how all parts and components will fit each other, be easily installed and maintained and be properly held in assembly. The successful bidder must submit these drawings in electronic format in Microstation 95, if requested; failure to provide drawings in this format will be cause to reject the bid.

(f) Interchangeableness. Each member including the handhole doors in the pole, the luminaire twin arm assembly, and the split pedestal base must be mutually interchangeable for assembly, so that no work will be required to make any member fit properly in the place of any other similar member of any other similar pole.

(g) Design. The pole must conform in design and dimensions to Drawings 929 and 929A.

(h) Structural Requirements. The pole must be manufactured in accordance with AASHTO's 1994 "Standard Specifications for Structural Supports for Highway Signs, Luminaires and Traffic Signals". The pole must be designed to meet AASHTO's 1994 criteria for 80 MPH wind loading with a 30% gust factor with the twin arm and acorn luminaires attached.

(i) Warranty. The manufacturer must warrant the construction of the poles and related parts to meet the requirements of this Specification and must warrant all parts, components, and appurtenances against defects due to design, workmanship, or material developing within a period of three years after the parts have been delivered. This will be interpreted particularly to mean structural or mechanical failure of any component, failure of any weld, or failure of any portion of the painting system. The warranty must be furnished in writing guaranteeing replacement, including shipment, free of charge to the City, of any light pole assembly, or component parts thereof. The warranty must accompany any submittal information.

MASTS

3. (a) Mast Size. The mast size must be 16'-0"and must provide a 0.14" per foot taper. The mast must be rolled to provide a 16-flute pattern.

(b) Mast Design. The mast design must be as shown on Drawing 929 and 929A.

(c) Material. The mast must be 7 gauge high strength low alloy steel in accordance with ASTM A595, Grade A. The shaft must have a 0.14" per foot taper. The flutes must be neat, true to pattern and free from cracks and flaws. Each mast must be straight and centered on its longitudinal axis.

(d) Mast Base. The mast base must be a 1" thick steel plate of low alloy, high strength steel conforming to ASTM A 595, grade C, ASTM A 588 or ASTM A 606.

1. The base plate must have four 1 ½" wide by 3" long(measured along the circumference) slots for a 15" bolt circle using 1 1/4" anchor bolts. Anchor bolts, nuts, and washers to be provided by others. Any special hardware required must be provided by the Contractor.

2. It must provide sufficient internal clearance for two 3" conduit entries and a 3/4" ground rod.

3. The mast must be inserted into the base to a maximum depth which will still allow for an adequate weld to be made between the bottom of the mast and the plate. A circumferential weld must be made between the mast and the base at both the top and underside of the plate.

(e) Provision for Ground. A ½"-13 square nut must be welded to the inside of the mast on the handhole entry frame for a ground connection.

(f) Entry. A vertical door frame carrying a removable door providing access to the interior of the mast must be welded into a close fitting opening centered approximately 15" above the bottom of the base. The door frame must be formed and welded of steel with cross section not less than 1-1/2" wide by 1/4" thick so as to adequately reinforce the opening of the mast. The internal horizontal clearance of the door frame must be 4"; its internal vertical height must be 8". Its upper and lower ends must be semi-circular meeting its straight sides tangentially. The frame must have two welded tabs; one at the top and one at the bottom of the door frame. The top hole must be located 13/16 of an inch from the top of the opening. The bottom hole must be located 13/16 of an inch from the bottom of the opening. These tabs must be drilled to accept a 1/4 inch screw. Stainless steel spring clips must be mounted to the tabs. These clips must be made to accept 1/4"-20 machine screws. The entry must in all respects be identical to handhole openings on poles that have already been installed and accepted by the City.

(g) Door. The removable door must be formed of sheet steel approximately 1/8" thick. It must fit the door frame closely and be dished so that it will stay in proper position even if its locking screws become slightly loosened. The door must be drilled top and bottom to accept the 1/4" -20 hex head stainless steel screws which will fasten the door to the door frame. All doors must be interchangeable. Doors must fit pole handholes of like poles that have already been installed and accepted by the City. Alternate methods will be subject to approval by the Commissioner or his fully authorized representative.

(h) Tag. To each pole must be attached immediately below the handhole by mechanical means and not by adhesive, a stainless steel tag with an embossed legend which must include the pole outside diameter at the base, the overall length, and the gauge.

(i) With pole set in place and the door securely fastened, there must be no exposed wires, bolts or appurtenant hardware other than the door fasteners.

(j) Tenon. A tenon must be provided at the top of the pole for attachment of a twin mast arm bracket. The tenon must consist of one 5" I.P.S. pipe 3 inches long

and one pipe of 2.5" diameter 20" long, as shown on Standard Drawing 929. The tenon must provide positive, structurally sound mating between the mast and the attached device. The tenon must be factory assembled to the mast. The finished mast must give the appearance of a single, homogeneous mast and the entire assembly must be structurally sound so that with the weight of a twin mast arm and two luminaires, the mast will not twist, rack, vibrate or otherwise deform when subjected to the severe vibrations of passing elevated trains or heavily loaded vehicles.

(k) Flower Basket Rosettes. The pole must be equipped with flower basket rosettes welded to the pole as shown on Standard Drawings 929 and 929A. Other than the rosettes, no permanent attachments using welds, drilled and tapped holes, etcetera must be provided for the flower basket attachments.

BANNER ARMS, FLOWER BASKET BRACKETS, AND BRACELETS (Optional)

4. Under a separate item, banner arms, bracelets and attachments as shown on Standard Drawings 929 and 929A must be provided. Unless otherwise noted, the banner arms must be constructed of a lightweight material which will withstand the loading of banners under 1994 ASSTHO wind conditions. Banner arms must have an outside diameter of 1-3/4". Banner arms must be attached by means of stainless steel banding. Banner arm bracelets must be attached with set screws. Flower basket bracelets and base bracelets must be attached with set screws and must conform to Standard Drawings 929 and 929A. No permanent attachments using welds, drilled and tapped holes, etcetera should be provided for the banner arm or flower basket attachments. All castings and parts must be permanently identified on the back side.

WELDING

5. (a) General. Where welds are required and approved, each welded joint must be made in conformity with the proper interpretation of the standard welding symbols of the American Welding Society. Each bidder must submit with his proposal a drawing showing the sizes and types of welds, must state the type of electrode and must describe the welding methods he proposes to use in fabricating the pole.

(b) Certifications. Welders must have proper certification for the welding operations required. Welding by non-certified personnel will not be allowed.

(c) Testing. All welds of 5% of the poles in every lot must be inspected for penetration and soundness of the welds by the magnetic particle inspection method or by radiography. Acceptance or rejection will be governed by the same conditions as in the testing section. If the magnetic inspection process is used, the dry method with direct current must be employed. All transverse welds must be magnetized by the "prod" (Circular Magnetization) method.

PAINTING

6. (a) Oil and Grease Removal. All metal surfaces must be washed with an alkaline detergent to remove oils and grease.

(b) Metal Cleaning. All exterior metal surfaces must be cleaned by blasting with a combination of shot and grit to remove all dirt, mill scale, rust, corrosion, oxides and foreign matter and provide a "near white" surface in accordance with SSPCS-SP10. Included in this process, the pretreatment process and the painting process must be the interior base section of the mast to a minimum height of 12".

(c) Chemical Pretreatment. The cleaned metal surfaces must then be treated with a hot, pressurized iron phosphate wash and must be dried by convection heat.

(d) Exterior Coat. A thermosetting, weathering, Polyester powder coat must be applied electrostatically to all cleaned and treated surfaces to a uniform 8-mil thickness in a one coat application. This powder coat must be cured in a convection oven at a minimum temperature of 400º Fahrenheit to form a high molecular weight fusion bonded finish.

(e) Alternate Methods. Alternate powder coat methods may be reviewed and tested on a case by case basis. However, no coating method will be accepted unless the Commissioner judges such alternate to be equal to the coating herein specified.

(f) Interior coat. The interior metal surfaces must be powder coated with a thermoplastic hydrocarbon resin containing application over untreated metal surfaces. The resin must be applied at a temperature of approximately 200º Fahrenheit to a minimum thickness of 3 mils. The interior thermoplastic coat must overlap the interior, thermosetting base coat by approximately 6". Alternate interior coatings may be used subject to prior approval of the Commissioner.

(g) Durability. Both the exterior and interior coats must be capable of passing 1,000 hours of salt spray exposure per ASTM B117 in a 5% Na Cl (by weight) solution at 95º Fahrenheit and 95% relative humidity without blistering. Before test, the panel must be scribed with an "X" down to bare metal.

(h) Coating Measurement. Measurement of coating thickness must be done in accordance with SSPC-Pa 2-73T, "Measurement of Dry Paint Thickness with Magnetic Gauges," except that the lowest "single spot measurement" in an area of two square inches must be not less than 7.0 mils.

(i) Color. Color must be gloss black. A color sample must be submitted for approval prior to fabrication. This color sample must include the manufacturer's name and the manufacturer's color name as well as any other information required to purchase the same color for the mast arms, luminaire and the cast aluminum split pedestal base.

TESTING

7. (a) General. All completed masts must be available for testing. Unless specifically authorized in writing, all tests must be performed at the manufacturer's plant. A record of every test must be made and a certified copy must be submitted to the Commissioner before the poles are shipped.

(b) Requirements. The following tests must be included in the testing procedure:

1. Coupon tests as outlined in ASTM A53 and A595, A588, or A606.

2. With the mast base rigidly secured using the normal mast mountings, a 1000 pound force must be incrementally applied, perpendicular to the mast at the tenon. This force must then be applied a second time at approximately the same location. The mast must then be checked to insure that the mast is still securely fastened; that it is plumb; and that no cracks have developed in either the mast, tenon or base.

3. Perform Weld tests as described in "welding" section.

(c) Acceptance. Tests must be made on 5% of all masts. If any of the masts fail to pass these tests, an additional three masts must be tested for each failed mast. Should any of these additional masts fail to pass these test requirements, the entire lot will be subject to rejection. The Commissioner will then decide, based on the nature of the failure, whether the entire lot will be rejected outright or whether the manufacturer may subject each mast to testing, and those masts which fulfill the requirements will be accepted.

PACKAGING AND SHIPPING

8. (a) General. The poles must be shipped in bundles weighing a maximum of 5,000 pounds. Each pole must be individually wrapped and protected so that it can be bundled and unbundled, without damage to the pole or its finish. Each pole wrapping must be permanently marked using 2 inch lettering identifying the pole type. Specific instructions must be securely attached to each bundle indicating the proper methods of storage. In addition, each bundle must contain specific instructions on unbundling and erection of the poles. Instructions must be printed on a fiber based paper with a permanent ink so that instructions will be completely legible after weathering outdoors for a minimum of 5 years. All pole hardware must be packaged in labeled containers and enclosed with the appropriate bundles. Castings and parts for the banners and flower baskets must be packaged in clearly labeled boxes. Parts hardware must be packaged in clear containers, properly labeled.

(b) Pole Bundles. The bundles must consist of poles laid base to top to form an approximately rectangular cylinder. Materials such as lumber (2" x 4" min.), non-

marring banding, and other appropriate bundling materials must be used to make a rigid, long lasting bundle capable of being handled, shipped and stored without shifting of contents or breaking. Bundling procedure will be subject to approval. Any bundles, in which either poles or packaging is received broken, damaged or with contents shifted, will not be accepted and it will be the responsibility of the supplier to return the bundle to its original destination at no cost to the City of Chicago. The bundles should be capable of being stacked two high without breaking, or shifting of the contents. Each bundle must be capable of being lifted by a fork lift truck or crane and the bundles must be shipped on a flatbed truck to facilitate unloading.

(c) Pole Hardware. Any appurtenant devices and hardware not attached to the poles must be carefully wrapped and securely attached to each bundle. Payment will be withheld for any bundle delivered without the appurtenant devices and hardware. Cracked, broken, chipped or damaged parts will be considered as an incomplete delivery as regards payment.

(d) Castings and Parts. Castings and parts for the banners and flower basket attachments must be individually wrapped and packaged in boxes. Hardware must be packaged in a clear package, clearly labeled. The label must identify each piece of hardware and the quantity of each, as well as what part the hardware is for. An individual box must contain like part types and the related hardware (i.e. the upper banner bracelet halves and hardware must be boxed separately from the lower banner bracelet halves and hardware). Each box must be labeled with 3/8" lettering identifying the manufacturer, the casting or part numbers, the part name, the date of manufacture, the City contract number, and the City commodity code.

(e) Delivery. All material must be delivered to the Division of Electrical Operations storage yard at 4101 South Cicero in Chicago, or to another location in Chicago as indicated on the order.

ELECTRICAL SPECIFICATION 1513
DIVISION OF ELECTRICAL OPERATIONS
DEPARTMENT OF TRANSPORTATION
CITY OF CHICAGO
REVISED JULY 17, 2006

SPLIT PEDESTAL BASE: FOR CHICAGO 2000 LIGHT POLE

SUBJECT

1. This specification states the requirements for a split pedestal base (Clamshell) for installation on a 10" x 32'-6" fluted, tapered steel Chicago 2000 light pole. This specification will address the requirements for a split aluminum base with aluminum doors, a split fiberglass base without doors, and non-metallic doors only.

SUBMITTAL INFORMATION REQUIRED

2. (a) Manufacturer's Certification of Compliance. The submittal information must include a written certification of compliance with this Specification from the Manufacturer.

(b) Manufacturer's Shop Drawings. Scaled manufacturer's shop drawings showing actual split pedestal base and/or door dimensions, details, and welds. Shop drawings must be original engineering drawings created by the manufacturer; photocopied or scanned copies of the Standard Drawings will not be accepted, and will be rejected as an incomplete submittal. These drawings will also be submitted in electronic format in Microstation 95, if requested by the City; failure to provide drawings in this format will be cause for rejecting the submittal.

Dimensions must include but will not be limited to: base height, width, pattern, and fluting; access door opening length, width, plan location, and height above base bottom.

Details must include scaled and dimensioned plan views, front elevations, side elevations, and section views as required for components including but not limited to: base, access doors and door attachments.

Welds must include but will not be limited to: locations, sizes, and types of welds in accordance with the WELDING Section of this Specification.

(c) Manufacturer's catalog cut sheets showing split pedestal base and/or door designation(s), characteristics, and catalog number(s).

(d) Manufacturer's specifications including fabricating materials and processes.

(e) Manufacturer's written installation instructions and maintenance manuals including recommendations and/or procedures for storage, assembly, orientation, installation, and numeric tolerances for torquing the access door bolts to the split pedestal base.

(f) Sample. If requested by the Chief Procurement Officer, one completely assembled split pedestal base and/or doors with hardware and all components, of the manufacture intended to be furnished, will be submitted for review within fifteen (15) business days from the receipt of notice. The sample base must be coordinated with an existing Chicago 2000 light pole for accuracy of fit. The sample door must be coordinated with an existing base for accuracy of fit.

(g) Warranty. The manufacturer must warrant the performance and construction of these split pedestal bases and/or doors to meet the requirements of this Specification and must warrant all parts, components, and appurtenances against defects due to design, workmanship, or material developing within a period of three years after the bases and/or doors have been delivered. This will be interpreted particularly to mean structural or mechanical failure of any component, failure of any weld, or failure of any portion of the painting system. The warranty must be furnished in writing guaranteeing replacement, including shipment, free of charge to this Contract and to the City, of any split pedestal base or door assembly, or any component parts thereof, which, as determined by the Commissioner, would develop aforesaid failures. The warranty must accompany submittal information. Any split pedestal base, door, or part thereof not performing as required or developing defects within this period, must be replaced by the manufacturer at no cost to the City. The Commissioner will be the sole judge in determining which replacements are to be made and the Commissioner's decision will be final. Any cost for the warranty as specified will be incidental to this contract.

GENERAL

3. (a) Products. Split pedestal bases and/or doors and component equipment must be the products of established manufacturers, and must be suitable for the service required. Split pedestal bases or component equipment items which are proposed as similar or identical must be the products of a single manufacturer. Aluminum Bases and/or doors may be manufactured by Union Metal Corporation, Holophane Corporation, or an approved equal. Fiberglass bases or doors may be manufactured by Shakespeare Company, W.J. Whatley, Incorporated, or an approved equal.

(b) Specifications. The split pedestal bases and/or doors must conform in detail to the requirements herein stated, and to the Specifications and Methods of Test of the American Society for Testing and Materials cited by ASTM Designation Number, of which the most recently published revision will govern.

(c) Drawings. The drawings mentioned herein are drawings of the Department of Transportation being an integral part of this specification cooperating to state the necessary requirements.

(d) Design. The base and/or doors must conform in design and dimensions to corresponding Standard Drawings 930 and 930A.

(e) Approval. Whenever "approval" and "approved" are used in this specification they will mean a written approval by the Commissioner to be secured prior to proceeding with manufacture of these split pedestal bases and/or doors.

(f) Commissioner's Review. The Commissioner will be the sole judge in determining the submitted split pedestal bases and/or doors compliance with this Specification. The Commissioner's decision will be final.

OPTION 1. ALUMINUM BASE WITH DOORS

4. (a) Each split pedestal base must be cast aluminum conforming to ASTM B26/B26M, Grade 356. Each base must be certified as pure #356 alloy, free of foreign materials or cosmetic fillers.

(b) The split pedestal base must conform in detail and dimensions to Standard Drawings 930 and 930A.

(c) All castings must be done in a workmanlike manner which will result in uniform casting without warping or mold shifting. Castings must have smooth external surfaces free from protuberances, dents, cracks or other imperfections marring their appearance. Welding or plugging of casting defects is prohibited. All castings and parts must be permanently labeled for easy identification.

(d) The two halves of the split base casting must be perfectly matched to each other and to the poles such that when they are attached to the mast, the base and mast assembly must appear as a one piece unit. No tolerance greater than 0.125" will be accepted.

(e) The split pedestal base attachment to the mast must provide the structural integrity to ensure the base will not vibrate, twist or bounce during the sidewalk movement experienced when an elevated train or heavily loaded vehicle passes. Where set screws are used to secure the split pedestal base to the mast, a minimum of 3/8" thickness of metal must be provided where the set screws are inserted to minimize the possibility of stripping the threads when the set screws are tightened into place. The set screws will be 3/8"-16 steel allen head screws and a minimum of four set screws must be provided, two per base half. The set screws must be black.

(f) The split pedestal base must provide two entry doors, opposite each other, whose appearance and fit are in consonance with the mast and base design both aesthetically and structurally. The doors must be of the same material as the base.

1. The doors must be securely fastened in place with four 1/4"-20 hex head stainless steel screws which will thread into a rigid door frame. The door frame must be drilled and tapped. The door must be drilled only.

2. All doors must be interchangeable with any other base, including bases of like design which have already been installed and accepted by the City. Bases whose doors are matched to a single base will be rejected.

3. The doors must be positioned in the base such that the base can be attached to the mast with the base doors in perfect alignment with the mast handhole door.

4. The doors must provide ample room for a worker to reach into the base with hand tools, open the mast handhole door, splice wires, change connectors and read the identification tag on the mast.

(g) Interchangeability. Each member including the access doors in the base and all component equipment must be mutually interchangeable for assembly, so that no work will be required to make any member fit properly in the place of any other similar member of any other similar base.

(h) Fabrication. It is preferred that the split pedestal base is cast as a single unit and sawcut into identical halves.

(i) Standards. Each split pedestal base must be made in conformity with the proper interpretation of the applicable ASTM Standards, and as indicated on the drawings.

(j) Certification. All split pedestal bases must be made by personnel who are certified for that type of work. Work must be performed in accordance with NIST Certification.

(k) Finishing. Finishing work must be performed at the manufacturer's facility. All work must be inspected for shop finish, soundness and appearance by the Commissioner.

OPTION 2. FIBERGLASS BASE WITHOUT DOORS

5. (a) Each pedestal base must be formed of a fiberglass composite consisting of a polyester resin and containing a minimum of 65% fiberglass by weight. The resin must contain no clay fibers. The composite must be UV and weather resistant. Alternate materials may be considered. Each base half must be permanently marked on the inside identifying it as a base for a pedestrian pole.

(b) The split pedestal base must conform in detail and dimensions to Standard Drawings 930 and 930A.

(c) The two halves of the clamshell must be identical to each other. They must be perfectly matched and when installed there must be no more than a 0.125 inch gap between the inside top of the assembled base and the outside surface of the mast.

(d) Set screws must be used at the top of the base to attach the base to the mast, giving the base some rigidity and allowing the base to be positioned level. There must be four set screws (two in each half) evenly spaced at 90 degrees. The set screws will be 5/16"-18 allen head steel screws. The set screws must be black.

(e) The color of the base must be gloss black and must match the color of existing and proposed Chicago 2000 poles. The resin must contain color pigment throughout. The pigment must be even throughout the thickness of the base. A finish coat of urethane enamel must be applied to the surface of the base to a minimum dry thickness of 1.5 mils. The resin color must match the enamel color. A paint sample on fiberglass must be submitted for approval prior to production. The paint manufacturer's name and any information necessary to acquire the same color for the pole must be provided. The contractor must supply one quart of touch-up paint for every 50 bases ordered.

(f) The texture of the fiberglass base exterior must be equal to that of the aluminum cast base. Acceptance of the aesthetic appearance of the base will be by the Commissioner.

(g) The two halves of the clamshell must be affixed by means of screws as shown on Standard Drawing 930A. The screws must fit so that the halves of the base are drawn together so that the edges of the base fit snug against each other. Threaded stainless steel inserts in the base must be used to affix the screws. The screws must be flush with the surface of the base and must not detract from the appearance of the base. Other methods of attachment may be considered. Any method of attachment must be approved by the Commissioner.

OPTION 3. NON-METALLIC DOORS

6. (a) Each base door must be formed of fiberglass (as described in Section 5.) or from another non-metallic material. The material must be UV and weather resistant. Any material other than fiberglass must be approved by the Commissioner. Each door must have a permanent marking on the back describing the part as a door for a Chicago 2000 light pole base.

(b) The door must conform to the detail and dimensions of Standard drawings 930 and 930A. All doors must be interchangeable in both existing and proposed Chicago 2000 light poles bases.

(c) The color of the door must be gloss black and must match the color of existing and proposed Chicago 2000 light poles and bases. The non-metallic door must be pigmented throughout the material. The pigment must be even throughout the thickness of the door. A finish of urethane enamel must be applied to the door

surface to a minimum dry thickness of 1.5 mils. A sample of the door with paint must be submitted for approval prior to production.

(d) The door appearance must be of a texture and of a fit that it will appear to be part of the original base. Acceptance of the aesthetic appearance and fit of the door will be by the Commissioner.

(e) The doors must be securely fastened in place with four 1/4"-20 hex head stainless steel screws which will thread into the base frame. The door will be properly drilled to accept the screws. The holes must not be tapped. The screws must have a stainless steel core within a threaded nylon body. Screws must be supplied with the doors.

OPTION 4. ALUMINUM BASE WITH NON-METALLIC DOORS

7. Each aluminum base must meet the requirements of Option 1, with the exception of the doors. Each door must be non-metallic meeting the requirements of Option 3.

WELDING FOR ALUMINUM BASES

8. (a) General. Where welds are required and approved, each welded joint must be thoroughly cleaned of flux and spatter, and must be made in conformity with the standards of the American Welding Society. Each bidder must submit with his proposal a drawing showing the sizes and types of welds, in conformity with the proper interpretation of the standard welding symbols of the American Welding Society. The bidder's proposal must state the type of electrode and must describe the welding methods proposed for use in fabricating the base.

(b) Certifications. Welders must have proper certification for the welding operations required. Welding by non-certified personnel will not be allowed. Certifications for welding personnel must be included with the submittal information package for review.

(c) Testing. All welds of 5% of the bases in every lot must be inspected for penetration and soundness of the welds by the magnetic particle inspection method or by radiography. Acceptance or rejection must be governed by the same conditions as in the testing section. If the magnetic inspection process is used, the dry method with direct current must be employed. All transverse welds must be magnetized by the "prod" (Circular Magnetization) method. Proposed weld inspection method must be included with the submittal information package for review.

PAINTING OF ALUMINUM BASES

9. (a) Oil and Grease Removal. All metal surfaces must be washed with an alkaline detergent to remove oils and grease.

(b) Chemical Pretreatment. The cleaned metal surfaces must then be treated with a hot, pressurized phosphate wash and must be dried by convection heat.

(c) Exterior and Interior Coat. A thermosetting, weathering, Polyester powder coat must be applied electrostatically to all cleaned and treated surfaces to a uniform eight mil thickness in a one coat application. This powder coat must be cured in a convection oven at a minimum temperature of 400°F to form a high molecular weight fusion bonded finish.

(d) Alternate Methods. Alternate powder coat methods may be reviewed and tested on a case by case basis. However, no coating method will be accepted unless the Commissioner judges such alternate to be equal to the coating herein specified.

(e) Durability. Both the exterior and interior coats must be capable of passing 1,000 hours of salt spray exposure as per ASTM B117 in a 5% Na Cl (by weight) solution at 95°F and 95% relative humidity without blistering. Before test, the panel must be scribed with an "X" down to bare metal.

(f) Coating Measurement. Measurement of coating thickness must be done in accordance with SSPC-Pa 2-73T, "Measurement of Dry Paint Thickness with Magnetic Gauges," except that the lowest "single spot measurement" in an area of two square inches must be not less than 7.0 mils.

(g) Color. Color must be gloss black unless noted otherwise in the order. A 4" square color chip sample must be submitted for approval prior to fabrication. The chip sample must be of the same material as the split pedestal base, and must include the manufacturer's name and the manufacturer's color name as well. The sample must also include any other information required to purchase the same color for the pole, mast arm(s), and the cast aluminum finial.

(h) Field Touch-up. Any minor damage to the split pedestal base surfaces must be touched-up in a professional manner as recommended by the paint manufacturer, with protective coating solutions as provided by the split pedestal base manufacturer at no additional cost to the City. Any major damage to the split pedestal base or components surfaces must be repaired at the manufacturer's place of business, or must be replaced as directed by the Commissioner. The Commissioner will be the sole judge of the extent of any such damage and the adequacy of repair. The Contractor must supply a field touch-up kit for every 20 bases or fraction thereof. Each kit must consist of a highly legible instruction sheet, one gallon of the recommended touch-up paint and all other materials required to touch-up 20 bases.

FABRICATION REQUIREMENTS FOR ALUMINUM BASES

10. (a) Foundry Qualifications. The manufacturer must demonstrate that the foundry proposed to fabricate the split pedestal bases must meet or exceed the specified qualification requirements under the following set of conditions. The manufacturer must provide foundry qualifications using published capacity data as part of the submittal package, and must include the actual molding and core equipment proposed for use in fabricating the split pedestal bases for the specific order. The responsible material proposal must contain verification of production capacity including the number of shifts per day running in the plant. Submittal information must include the foundry's written Quality Assurance Plan which demonstrates achievement of the latest industry technology in testing requirements. Submittal information must demonstrate that the work performed by the foundry will be done in accordance with both ASTM Standards and NIST Certification. Further, the foundry must be a domestic facility, unless proven to be directly owned and operated by the manufacturer.

(b) Verification of Data. All foundry qualifications must be based on the parameters listed above. This data must be verified by an independent witness or representative as approved by the Commissioner. All verification must be performed on site at the foundry. The cost of verification must be included in this item. Should the foundry be deemed incapable of meeting this Specification after verification, the Contractor must provide an alternate foundry as approved by and at no additional costs to the Commissioner. The foundry qualifications and verification process must be repeated in its entirety.

TESTING

11. (a) Testing. Testing must be conducted on five percent of the manufacturer's production bases or doors for each order in which the quantity is 20 or more. All testing must be certified by the manufacturer, or by an independent lab.

(b) The selection of bases or doors must be a random selection from the entire completed lot ordered.

(c) Requirements for Aluminum Bases. All completed aluminum bases must be available for testing. The following tests must be included in the testing procedure:

1. Bar tests as outlined in ASTM B26.

2. Weld tests as described in the WELDING Section of this Specification.

(d) Requirements for Fiberglass Bases and Non-Metallic Doors. All completed fiberglass bases and non-metallic doors must be available for testing. The manufacturer must provide evidence that the bases and doors are structurally sound and are able to withstand the normal abuse of salt spray, freeze-thaw cycles, and

exposure to moisture. The bases and doors must be impact resistant and must be resistant to UV damage.

(e) The summary report and the test results must be certified by the independent test laboratory or the manufacturer's laboratory, as applicable, and must be sent directly to the Commissioner before the bases and/or doors are shipped.

(f) Acceptance of Equipment. Tests must be made on 5% of all bases or doors in the order. If any of the bases or doors fail to meet these specifications, an additional three bases or doors must be tested for each failed unit. Should any of these additional units fail to meet these specifications, the entire lot will be subject to rejection. The Commissioner will then decide, based on the nature of the failure, whether the entire lot will be rejected outright or whether the manufacturer may subject each base or door in the order to testing. If each base or door in the order is tested, those units which fulfill the specified requirements may be accepted at the discretion of the Commissioner.

SHIPMENT AND DELIVERY

12. (a) General. The split pedestal bases and/or doors must be carefully inspected at the factory prior to shipment to assure that the bases and/or doors are complete and free of defects. When bases or doors are stacked together, they must be supported with suitable spacers or must otherwise be protected from dents and other potential shipping damage. The spacing and protective materials must be suitable for and usable in the storage of the bases and doors. All hardware must be packaged in a clear container and labeled as to size, quantity, and part association.

(b) Packaging. The split pedestal bases must be shipped on pallets with at least six units per pallet. Each base must be individually wrapped and protected so that it can be bundled and unbundled without damage to the base or its finish. Each base wrapping must be labeled to identify the base. Specific instructions must be securely attached to each pallet indicating the proper methods of storage. In addition, each pallet must contain specific instructions on the installation of the split pedestal bases. Instructions must be printed on a fiber based paper with a permanent ink so that instructions will be completely legible after weathering outdoors for a minimum of 5 years. Doors must be individually wrapped and packaged in cartons. The cartons must be labeled in 3/8 inch high lettering indicating the type of door (i.e. FIBERGLASS DOOR FOR CHICAGO 2000 POLE BASE), the part number, the manufacturer, the date of manufacture, and the contract number.

(c) Appurtenant Devices and Hardware. Any appurtenant devices and hardware not attached to the bases must be carefully wrapped, labeled, and securely attached to each pallet. Hardware for doors must be packaged in a clear bag with a label indicating the type of hardware, the quantity of hardware, and the associated door type. Hardware for doors must be in the same carton as the doors. Payment will be withheld for any units provided without the appropriate appurtenant devices and

hardware, or for any missing or improper packaging or labeling. Cracked, broken, chipped or damaged units will also be considered as incomplete quantities as regards payment.

(d) Touch-up Paint. Touch-up paint and appurtenant materials must be packaged in units sufficient for the number of bases on each pallet. These units will be securely attached to each pallet.

(e) Delivery. Split pedestal bases and/or doors will be delivered to the Division of Electrical Operations storage yard at 4101 South Cicero in Chicago, or as indicated on the order. Split pedestal base information submitted for approval will include any recommendations of the Manufacturer for storage.

ELECTRICAL SPECIFICATION 1514
DIVISION OF ELECTRICAL OPERATIONS
DEPARTMENT OF TRANSPORTATION
CITY OF CHICAGO
REVISED JULY 23, 2001

CHICAGO 2000 MAST ARM: 8-FOOT, STEEL

SUBJECT

1. This specification covers the requirements for an 8-foot straight steel mast arm and decorative scroll for supporting a teardrop street light luminaire on a Chicago 2000 light pole or other pole fitted for a simplex attachment.

SUBMITTAL INFORMATION REQUIRED

2. (a) Manufacturer's Certification of Compliance. The submittal information must include a written certification of compliance with this specification from the Manufacturer

(b) Manufacturer's Shop Drawings. Scaled manufacturer's shop drawings showing actual mast arm and scroll dimensions, details, and welds. Shop drawings must be original engineering drawings created by the manufacturer; photocopied or scanned copies of the Standard Drawings will not be accepted, and will be rejected as an incomplete submittal. These drawings must also be submitted in electronic format in Microstation 95, if requested by the City; failure to provide drawings in this format will be cause for rejecting the submittal.

Dimensions must include but will not be limited to: mast arm length, diameter, and ornamentation; attachment plate length, width, thickness, and bolt circle; scroll length, cross section dimensions, and shape.

Details must include scaled and dimensioned plan views, front elevations, side elevations, and section views as required for components including but not limited to: attachment plates; ornamentation; and arm attachments.

Welds must include but will not be limited to: locations, sizes, and types of welds in accordance with the WELDING Section of this specification.

(c) Manufacturer's catalog cut sheets showing mast arm and scroll designation(s), characteristics, and catalog number(s).

(d) Manufacturer's specifications including fabricating materials and processes.

(e) Manufacturer's written installation instructions and maintenance manuals including recommendations and/or procedures for storage, assembly, orientation, installation, component access and wiring, and numeric tolerances for torquing the attachment plate bolts to the light pole mast arm support plate.

(f) Sample. If requested by the Chief Procurement Officer, one completely assembled gateway mast arm with scroll and integral components, of the manufacture intended to be furnished, must be submitted for review within fifteen (15) business days from receipt of notice.

(g) Warranty. The manufacturer must warrant the performance and construction of these mast arms and scrolls to meet the requirements of this specification and must warrant all parts, components, and appurtenances against defects due to design, workmanship, or material developing within a period of three years after the mast arms and scrolls have been delivered. This will be interpreted particularly to mean structural or mechanical failure of any component, failure of any weld, or failure of any portion of the painting system. The warranty must be furnished in writing guaranteeing replacement, including shipment, free of charge to this Contract and to the City, of any mast arm assembly, or any component parts thereof, which, as determined by the Commissioner, would develop aforesaid failures. The warranty must accompany submittal information. Any mast arm or part thereof not performing as required or developing defects within this period, must be replaced by the manufacturer at no cost to the City. The Commissioner will be the sole judge in determining which replacements are to be made and the Commissioner's decision will be final. Any cost for the warranty as specified will be incidental to this contract.

GENERAL

3. (a) Products. Mast arms and component equipment must be the products of established manufacturers, and must be suitable for the service required. Mast arm or component equipment items which are proposed as similar or identical must be the products of a single manufacturer. Mast arms must be manufactured by Union Metal Corporation, Valmont Industries Incorporated, or an approved equal.

(b) Specifications. The mast arm and scroll must conform in detail to the requirements herein stated, and to the Specifications and Methods of Test of the American Society for Testing and Materials cited by ASTM Designation Number, of which the most recently published revisions will govern. The arm must be manufactured in accordance with AASHTO's 1994 "Standard Specifications for Structural Supports for Highway Signs, Luminaires and Traffic Signals." The mast arm and attachment plate assembly must be designed to meet AASHTO's 1994 criteria for 80 MPH wind loading with a 30% gust factor, for gateway luminaires of not less than 65 pounds each and having an effective projected area (EPA) of not less than 1.70 square feet each; and twin gateway luminaire fitters of not less than 50 pounds each and having an EPA of not less than 3.5 square feet each.

(c) Drawings. The drawings mentioned herein are drawings of the Department of Transportation being an integral part of this specification cooperating to state the necessary requirements.

(d) Design. The mast arm and scroll must conform in design and dimensions to Standard Drawings 930 and 930C.

(e) Approval. Whenever "approval" and "approved" are used in this specification they will mean a written approval by the Commissioner to be secured prior to proceeding with manufacture of these mast arms and scrolls.

(f) Commissioner's Review. The Commissioner will be the sole judge in determining the submitted mast arms compliance with this specification. The Commissioner's decision will be final.

ARM DESIGN

4. (a) 8-Foot Mast Arm. Each 8-foot mast arm must be fabricated from a continuous, single piece, two (2) inch "extra strong" steel pipe conforming to the requirements of ASTM A53, Table X2. It must conform in detail with the mast arm shown on Standard Drawings 930 and 930C.

(b) Mast Arm Attachment. The mast arm attachment to be welded to all mast arms must conform to Standard Drawing 724. It must be a steel forging per ASTM A668, Class D, or cast steel conforming to the requirements for Grade 65-35 cast steel of ASTM A27, or it can be fabricated from corrosion resistant steel plate such as "Cor-Ten" or approved equal. It must be so designed that it may be fitted over the mast arm supports on the pole and be held by the mast arm supports in proper position without other support. Provision must be made for fastening the attachment to each mast arm support by two special screws and washers as noted in the HARDWARE Section of this Specification.

(c) Entryway for Wires. A drilled opening lined with a neoprene grommet having inserted therein a neoprene plug must be provided on the underside of the upper member of all arms approximately three inches from the point of attachment. The clear opening must not be less than 5/8 inch in diameter. Its design must be submitted for approval by the Commissioner or his authorized representative.

(d) Mast Arm Members. All mast arm members must conform with the type of steel required for the arm specified. The members must be continuous lengths of pipe and bar cut to the proper size to fabricate the mast arm lengths requested. No butt welded, swaged and welded or other pieced together configurations of pipe and bar lengths will be accepted. The outer and inner surfaces of the pipes and bars must be smooth and even without protrusions, nicks, holes or other imperfections.

(e) Interchangeability. Each member including the arm and all component equipment must be mutually interchangeable for assembly, so that no work will be required to

make any member fit properly in the place of any other similar member of any other similar mast arm.

SCROLL DESIGN

5. (a) Scroll. The scroll must be fabricated out of 3/4 inch thick by 2-1/2 inch wide bar stock meeting the requirements of ASTM A36. The scroll must be formed as shown on Standard Drawing 930.

(b) Clamps. The scroll must be attached to the mast arm and pole by clamps, as shown on Standard Drawing 930. The clamps must meet the requirements of ASTM A307 galvanized to ASTM A153. All connecting hardware must meet the Hardware requirements of the HARDWARE Section of this Specification.

(c) Identification. The scroll and clamps must be permanently labeled for identification purposes. The identification must not affect the aesthetics of the scroll.

(d) Painting. The scroll and clamps must be painted per the requirements of the PAINTING Section in this Specification.

(e) Welding. The scroll must be welded per the requirements of the WELDING Section in this Specification.

WELDING

6. (a) General. Where welds are required and approved, each welded joint must be thoroughly cleaned of flux and spatter, and must be made in conformity with the standards of the American Welding Society. Each bidder must submit with his proposal a drawing showing the sizes and types of welds, in conformity with the proper interpretation of the standard welding symbols of the American Welding Society. The bidder's proposal must state the type of electrode and must describe the welding methods proposed for use in fabricating the mast arm.

(b) Certifications. Welders must have proper certification for the welding operations required. Welding by non-certified personnel will not be allowed. Certifications for welding personnel must be included with the submittal information package for review.

(c) Testing. All welds of 5% of the mast arms and scrolls in every lot must be inspected for penetration and soundness of the welds by the magnetic particle inspection method or by radiography. Acceptance or rejection will be governed by the same conditions as in the TESTING Section. If the magnetic inspection process is used, the dry method with direct current must be employed. All transverse welds must

be magnetized by the "prod" (Circular Magnetization) method. Proposed weld inspection method must be included with the submittal information package for review.

HARDWARE

7. Two (2) special 1/2" - 13 NC x 1-1/2" long stainless steel cap screws, and two (2) stainless steel flat washers, must be provided for each mast arm attachment. All other hardware necessary to complete the assembly of the mast arm and scroll must be furnished. All hardware must be stainless steel, or equal corrosion-resistant metal, subject to approval.

PAINTING

8. (a) Oil and Grease Removal. All metal surfaces must be washed with an alkaline detergent to remove any oils or grease.

(b) Metal Cleaning. All exterior metal surfaces must be cleaned by blasting with a combination of shot and grit to remove all dirt, mill scale, rust, corrosion, oxides and foreign matter and provide a "near white" surface in accordance with SSPCS-SP10.

(c) Chemical Pretreatment. The cleaned metal surfaces must be treated with a hot, pressurized iron phosphate wash and must be dried by convection heat.

(d) Exterior Coat. A Thermosetting, polyester powder coat must be applied electrostatically to all cleaned and treated surfaces to a uniform eight (8) mil thickness in a one coat application. This powder coat must be cured in a convection oven at a minimum temperature of 400°F to form a high molecular weight fusion bonded finish.

(e) Alternate Methods. Alternate powder coat methods may be reviewed and tested on a case by case basis. However, no coating method will be accepted unless the Commissioner judges such alternate to be equal to the coating herein specified.

(f) Interior Coat. The interior metal surfaces must be powder coated with a thermoplastic hydrocarbon resin containing corrosion inhibitors. The resin must be formulated for application over untreated metal surfaces. The resin must be applied at a temperature of approximately 200°F to a minimum thickness of three (3) mils. The interior thermoplastic coat must overlap the interior, thermosetting base coat by approximately one (1) inch. Alternate interior coatings may be used subject to prior approval of the Commissioner.

(g) Durability. Both the exterior and interior coats must be capable of passing 1,000 hours of salt spray exposure as per ASTM B117 in a five percent (5%) NaC1 solution at 95°F and 95% relative humidity without blistering.

(h) Coating Measurement. Measurement of coating thickness must be done in accordance with SSPC-PA 2-73T, "Measurement of Dry Paint Thickness with Magnetic Gauges", except that the lowest "Single spot measurement" in an area of two square inches must be not less than 7.0 mils.

(i) Color. Color must be gloss black unless noted otherwise in the order. A 4" square color chip sample must be submitted for approval prior to fabrication. The chip sample must be of the same material as the mast arm, and must include the manufacturer's name and the manufacturer's color name as well. The sample must also include any other information required to purchase the same color for the pole mast and the cast aluminum finial and split pedestal base.

(j) Field Touch-up. Any minor damage to the mast arm surfaces must be touched-up in a professional manner as recommended by the paint manufacturer, with protective coating solutions as provided by the mast arm manufacturer at no additional cost to the City. Any major damage to the mast arm shaft or component surfaces must be repaired at the manufacturer's place of business, or must be replaced as directed by the Commissioner. The Commissioner will be the sole judge of the extent of any such damage and the adequacy of repair. The Contractor must supply a field touch-up kit for every 20 mast arms or fraction thereof. Each kit must consist of a highly legible instruction sheet, one gallon of the recommended touch-up paint and all other materials required to touch-up 20 mast arms and scrolls.

STRUCTURAL REQUIREMENTS

9. (a) Calculations: The manufacturer must provide certified deflection calculations showing compliance with 1994 AASHTO wind loading requirements for 100 mph winds with 30% gusts. The calculations must be performed based on a completely assembled gateway mast arm and luminaire, as specified herein. The scroll must not be considered as a structural element for the calculations. The structural calculations must be signed and sealed by a registered structural engineer.

(b) Parameters. The manufacturer must demonstrate that the mast arms will meet or exceed the specified structural requirements under the following set of conditions. The manufacturer must provide structural calculations using published loading data as part of the submittal package, and must perform structural testing using actual completed mast arms from the specific order as part of the testing. The responsible material proposal must contain verification of structural performance with results equal to or better than those listed in these Specifications. Submittal information must include computer calculations based on the controlling given conditions which demonstrate achievement of all listed performance requirements. Computer calculations must be done in accordance with both 1994 AASHTO recommendations and the City of Chicago requirements. The program(s) used to perform the calculations must be identified in the submittal. The structural testing must include maximum deflection and set as well as listings of all indicated test loads.

(c) Verification of Data. All structural data must be based on the parameters listed above. This data must be verified by an independent testing laboratory or manufacturer's laboratory as approved by the Commissioner. All testing must be performed on completed mast arms. Where this data causes the structural integrity to fall below the values required by this Specification, the masts must be redesigned in a manner acceptable to the Commissioner and retested until all requirements of this Specification are met. Should the mast arms be incapable of meeting this Specification after modification, the Contractor must provide suitable replacement mast arms as approved by and at no additional costs to the Commissioner.

TESTING

10. (a) Testing. Structural testing must be conducted on five percent of the manufacturer's production mast arms and scrolls for each order in which the quantity is 20 or more. The testing must include coupon tests, load tests, and weld tests. All testing must be certified by the manufacturer, or an independent lab.

(c) The selection of mast arms and scrolls must be a random selection from the entire completed lot required in the order.

(d) Coupon tests for the arm and the scroll as outlined in ASTM A53, A 668, A27, or A36.

(e) Load tests for mast arms. The scroll must not be considered as part of the load test. With mast arm rigidly anchored, a test load of 300 pounds must be applied at a point approximately one foot (1' - 0") from the free end. The load must be applied at right angles to the center line of the mast arm and in the same vertical plane. The deflection must not be greater than 3". Within one (1) minute after the test load is released, measurement must be made of the set taken by the mast arm. This set must not be greater than 0.5". The deflection measurement device must be reset to zero and the test load must be reapplied. The deflection must not change from the deflection noted in the first test by more than $\pm$5%. No measurable set must be noted within one (1) minute after test load is released. The mast arm must then be checked to insure that it is still securely fastened, that it is plumb, and that no cracks have developed in either the mast arm or attachment plate.

(f) Weld tests for both the arm and the scroll as described in the WELDING Section of this Specification.

(g) Acceptance of Equipment. Tests must be made on 5% of all mast arms and scrolls in the order. If any of the mast arms or scrolls fail to meet these specifications, an additional three mast arms or scrolls must be tested for each failed unit. Should any of these additional units fail to meet these specifications, the entire lot will be subject to rejection. The Commissioner will then decide, based on the nature of the failure, whether the entire lot will be rejected outright or whether the manufacturer may subject each mast arm or scroll in the order to testing. If each mast arm or

scroll in the order is tested, those mast arms or scrolls which fulfill the specified requirements may be accepted at the discretion of the Commissioner.

SHIPMENT AND DELIVERY

11. (a) General. The mast arms and scrolls must be carefully inspected at the factory prior to shipment to assure that the mast arms and scrolls are complete and free of defects. When mast arms are stacked together, they must be supported with suitable spacers or must otherwise be protected from dents and other potential shipping damage. The spacing and protective materials must be suitable for and usable in the storage of the mast arms. The same requirements apply to the scrolls. All hardware must be packaged in a clear container and labeled.

(b) Packaging. The mast arms and scrolls must be shipped in bundles weighing a maximum of 1,000 pounds. Mast arms and scrolls must be in separate bundles. Each mast arm or scroll must be individually wrapped and protected so that it can be bundled and unbundled without damage to the unit or its finish. The wrapping must be clearly marked to identify the arms and scrolls. Specific instructions must be securely attached to each bundle indicating the proper methods of storage. In addition, each bundle must contain specific instructions on unbundling and erection of the mast arms or scrolls. Instructions must be printed on a fiber based paper with a permanent ink so that instructions will be completely legible after weathering outdoors for a minimum of 5 years.

(c) Bundles. The bundles must consist of arms or scrolls laid to form an approximately rectangular cylinder. Arms and scrolls must be packaged in separate bundles. Materials such as lumber (2" x 4" min.) non-marring banding, and other appropriate bundling materials must be used to make a rigid, long lasting bundle capable of being handled, shipped and stored without shifting of contents or breaking. Bundling procedure will be subject to approval. Any bundles, in which either mast arms, scrolls or packaging is received broken, damaged or with contents shifted, will not be accepted and it will be the responsibility of the supplier to return the bundle to its original destination at no cost to the City of Chicago. The bundles should be capable of being stacked two high without breaking, or shifting of the contents. Each bundle must be capable of being lifted by a fork lift truck or crane and the bundles must be shipped on a flatbed truck to facilitate unloading.

(d) Appurtenant Devices and Hardware. Any appurtenant devices and hardware not attached to the mast arm or scroll must be carefully wrapped and securely attached to each bundle. All device and hardware containers must be clearly labeled as to the contents. Labels must identify the quantity of parts and their relationship to the arms or scrolls. Payment will be withheld for any units provided without the appropriate appurtenant devices and hardware. Cracked, broken, chipped or damaged units will be considered as incomplete quantities as regards payment. Improperly labeled units will also be considered as incomplete.

(e) Touch-up Paint. Touch-up paint and appurtenant materials must be packaged in units sufficient for twenty 20 mast arms and 20 scrolls. These units will be securely attached to a sufficient number of bundles to fulfill the touch-up paint requirements stated herein.

(f) Delivery. Mast arms and scrolls must be delivered to the Division of Electrical Operations storage yard at 4101 South Cicero in Chicago, or to a location indicated on the order. Mast arm and scroll information submitted for approval must include any recommendations of the Manufacturer for storage as required under this Contract.

ELECTRICAL SPECIFICATION 1528
DIVISION OF ELECTRICAL OPERATIONS
DEPARTMENT OF TRANSPORTATION
CITY OF CHICAGO
REVISED MAY 1, 2004

PRECAST CONCRETE STRUCTURES

SUBJECT

1. This specification covers the requirements for precast concrete structures to be used as City of Chicago electrical facilities. The structures will include manholes, handholes, and street light pole foundations.

GENERAL

2. (a) Specifications. The precast structures must conform in detail to the requirements herein stated and to the Specifications and Methods of test of the American Society for Testing and Materials cited by ASTM Designation Number of which the most recently published revision will govern.

(b) Acceptance. Precast structures not conforming to this specification will not be accepted. The Commissioner of Transportation or his representative will be the sole judge in determining if the precast structures meet this specification. The Commissioner's decision will be final.

(c) Drawings. The drawings mentioned herein are drawings of the Department of Transportation. They are integral parts of this specification cooperating to state necessary requirements.

(d) Bidders Drawings. Bidders must submit with their bids detailed scale drawings of the precast structures showing actual dimensions and details. Shop drawings must be original engineering drawings created by the manufacturer. The drawings must give every dimension necessary and show how the structure is assembled.

(e) Sample. One complete precast structure of each item must be submitted within fifteen (15) business days upon request of the Chief Procurement Officer.

(f) Warranty. The manufacturer must warrant the performance and construction of the precast structures to meet the requirements of this specification and must warrant all parts, components, and appurtenances against defects due to design, workmanship, or material developing within a period of one (1) year after the precast structures have been delivered. This will be interpreted particularly to mean structural failure of any element. The warranty must be furnished in writing

guaranteeing material replacement including shipment, free of charge to the City. The Commissioner will be the sole judge in determining which replacements are to be made. The Commissioner=s decision will be final.

DESIGN

(a) Material. Concrete must be Portland cement concrete, Class SI or PC, meeting current IDOT specifications. Pulling irons in manholes must meet or exceed the requirements of ASTM A36 steel. Pulling irons must be hot dipped galvanized. Steel reinforcing bars must meet or exceed the requirements of ASTM A615, Grade 60. Cable supports in manholes, including stanchions and racks, must be manufactured for that specific purpose. Stanchions must be non-metallic and must be capable of accommodating several different sizes of cable hooks at various elevations. A minimum of eight cable hooks, 4 inches in length, must be provided with each manhole, and should include any hardware necessary to affix the hooks to the racks. Cable hooks for handholes must be manufactured for that specific purpose. Cable hooks for handholes must be a minimum of 3 inches in length and 3 inches in depth. Anchor rods in foundations must meet the latest Electrical Material Specification 1467. Conduit elbows in foundations must meet the latest Electrical Material Specification 1462.

Foundations must include conduit elbows, anchor rods, washers, and nuts. Handholes must include cable hooks. Manholes must include cable racks, pulling irons, and cable hooks. Frames and covers, sump grates, clay tile, and ground rods are not included under this specification.

(b) Dimensions. Each manhole, handhole, and foundation must be dimensioned as shown on the appropriate standard drawing. The 30 inch diameter handhole is Standard Drawing 867. The 36 inch diameter handhole for 24 inch frame and cover is Standard Drawing 866. The 36 inch diameter for 30 inch for frame and cover is Standard Drawing 871. The 3 foot by 4 foot by 4 foot manhole for a 24 inch diameter frame and cover is Standard Drawing 730. The 3 foot by 4 foot by 4 foot manhole for 30 inch frame and cover is Standard Drawing 729. The 4 foot by 6 foot by 6 foot manhole for 24 inch frame and cover is Standard Drawing 732. The four foot by 6 foot by 6 foot manhole for 30 inch frame and cover is Standard Drawing 733. The 5 foot 4 inch by 7 foot 4 inch manhole roof is Standard Drawing 733. The precast 5 foot foundation is Standard Drawing 565.

(c) Construction. Each manhole and each handhole must have lifting anchors cast in the concrete to facilitate shipment and installation. If the manhole or handhole is in more than one piece, instructions for assembly must be provided. Also, a sufficient amount of bonding agent must be provided. The bonding agent must be approved material.

DELIVERY

4. All manholes, handholes, and foundations will be delivered to the Division of Electrical Operations storage yard at 4101 South Cicero Avenue in Chicago, or to another location within the City as indicated on the order. Any manhole, handhole, or foundation deemed to be defective by the Commissioner or his representative must be removed and replaced at no cost to the City. The Commissioner=s decision will be final.

ELECTRICAL SPECIFICATION 1533
DIVISION OF ELECTRICAL OPERATIONS
DEPARTMENT OF TRANSPORTATION
CITY OF CHICAGO
AUGUST 8, 2006

NON-METALLIC CONDUIT

SCOPE

1. This specification states the requirements for both rigid and coilable non-metallic conduit. The conduit will be used for low voltage (600 volt rated cables) electrical street lighting and traffic control systems. It may also be used for fiber-optic communications cables. This conduit will be installed underground. Rigid non-metallic conduit may be installed on structure.

GENERAL

2. (a) Standards. The following standards are referenced herein.

ASTM – American Society for Testing and Materials
NEC – National Electrical Code
NEMA – National Electrical Manufacturer's Association
UL – Underwriter's Laboratories

(b) Warranty. The manufacturer must warrant the conduit against defective workmanship and material for a period of one year from date of installation or date of delivery. Any conduit that is found to be defective must be replaced without cost to the City.

(c) Sample. If requested by the Chief Procurement Officer, a sample of the conduit intended to be furnished under this specification, must be submitted to the Engineer of Electricity within fifteen (15) business days upon receipt of such request.

MATERIAL

2. (a) Rigid non-metallic conduit will be made of polyvinyl chloride (PVC). All conduit and fittings must comply with ASTM D 1784 and with the applicable sections of NEMA TC2, UL standard 651, and NEC Article 347. Fittings must meet the standards of NEMA TC3 and TC6, as well as UL 514.

(b) Coilable non-metallic conduit will be made of high density polyethylene (HDPE). All conduit must comply with ASTM D3485 ,ASTM D 1248, and NEMA TC7.

SIZES

3. (a) PVC and HDPE will come in two wall thicknesses; schedule 40 and schedule 80.

(b) PVC will come in ten foot sections. HDPE will come on reels.

(c) Nominal inside diameters (in inches) for non-metallic conduits will include the following: ½ , ¾ , 1, 1 ¼, 1 ½ , 2, 2 ½ , 3, 3 ½, 4.

PACKING

4. Rigid conduit must be shipped in bundles. Coilable conduit must come on wooden reels. Both bundles and reels must be tagged to indicate the size and diameter of the conduit, the quantity in feet, the weight, and the manufacturer's name. The conduit itself must be marked to indicate the type and size, as well as the manufacturer.

ELECTRICAL SPECIFICATION 1534
DIVISION OF ELECTRICAL OPERATIONS
DEPARTMENT OF TRANSPORTATION
CITY OF CHICAGO
SEPTEMBER 25, 2006

CABLE: SINGLE-CONDUCTOR, COPPER 600 VOLT

SUBJECT

1. This specification states the requirements for cables intended to be used as conductors in 120/240 VAC, 60 cycle, single phase, street lighting circuits. The cables will be installed in underground ducts or conduit.

GENERAL

2. (a) Specifications. The cable must conform in detail to the requirements herein stated, and to the applicable portions of the latest revisions of the specifications and methods of test of the following agencies:

(1) ICEA Specification S-95-658
(2) IEEE Standard 383
(3) ASTM Standard E662-06
(4) ASTM Standard D470-05
(5) U.L. 44
(6) U.L. 854

(b) Acceptance. Cable not in accordance with this specification will not be accepted.

(c) Sample. If requested by the Chief Procurement Officer, a three (3) foot sample of the cable intended to be provided under this specification must be sent to the attention of the Engineer of Electricity within fifteen (15) days of receipt of such request.

(d) Warranty. The manufacturer must warrant the cable to be first class material throughout. In lieu of other claims against them, if the cables are installed within twelve (12) months of date of shipment, the manufacturer must replace any cable failing during normal and proper use within two years of date of installation. All replacements under this warranty must be made free of charge F.O.B. delivery point of the original contract.

CONSTRUCTION

3. This cable must consist of a round copper conductor with a tight fitting, free stripping, concentric layer of ethylene propylene (EPR) insulation and a concentric low lead chlorosulfonated polyethylene (CSPE) jacket extruded in tandem with, and bonded to, the insulation, or ethylene propylene (EPR) insulation only. The cable must be rated for continuous duty in wet or dry conditions at 90º C operating temperature, 130º C emergency overload temperature and 250º C short circuit temperature.

CONDUCTOR

4. (a) Material. The conductor must either be soft or annealed round copper wire.

(b) Specifications. The conductor must meet the requirements of ASTM B3, B8 or B258, as applicable.

(c) Sizes. The conductor size must be as stated in the PROPOSAL and in accordance with all requirements in Table A of this specification.

(d) Stranding. The number of strands, must be as indicted in Table A. Stranding must meet the requirements of ASTM B8, Class B.

INSULATION

5. (a) Type. The insulation must be ethylene propylene rubber compound meeting the physical and electrical requirements specified herein.

(b) Thickness. The insulation must be circular in cross-section, concentric to the conductor, and must have an average thickness not less than that set forth in Table A of this specification, and a spot thickness not less than ninety percent (90%) of the average thickness.

(c) Initial Physical Requirements:

1. Tensile strength, min., psi. 1,200

2. Elongation at rupture, min. % 250

(d) Air Oven Exposure Test. After conditioning in an air oven at 121 +/- 1ºC for 168 hours using methods of test described in ASTM-D 573:

Tensile strength, minimum percent of unaged value.....75

Elongation at rupture, minimum percent of unaged value.....75

(e) Mechanical Water Absorption:

GRAVIMETRIC METHOD: After 168 hours in water at 70+/- 1°C:
water absorption, maximum, milligrams per square inch…….5

(f) Cold Bend Test Requirements. The completed cable must pass the "Cold-Bend, Long-Time Voltage Test on Short Specimens" of ASTM D-470 except that the test temperature must be minus (-) 25°C.

(g) Electrical Requirements

1. Voltage Test. The completed cable must meet an A.C. and D.C. voltage test in accordance with ASTM D-470 and D-2655.

2. Insulation Resistance. The completed cable must have an insulation resistance constant of not less than 20,000 when tested in accordance with methods shown in ASTM D-470.

JACKET

6. (a) Type. If the cable is jacketed, the jacket must be a chlorosulfonated polyethylene (CSPE) compound meeting the physical and electrical requirements specified herein. The CSPE jacket must meet CFR Title 40, Part 261, for leachable lead.

(b) Thickness. The jacket must be circular in cross-section, concentric with the insulation, must have an average thickness not less than that set forth in Table A of this specification and a spot thickness not less than ninety percent (90%) of the average thickness.

(c) Initial Physical Requirements:

1. Tensile strength minimum PSI 1800
2. Elongation at rupture, minimum percent 300

(d) Air Oven Exposure Test. After conditioning in an air oven at 121 +/- 1°C for 168 hours:

1. Tensile strength, minimum percent of unaged value 75
2. Elongation at rupture, minimum percent of unaged value 60

(e) Mechanical Water Absorption. After 168 hours at 70 +/- 1°C:

1. Milligrams per square inch, maximum 20

TESTING

7. (a) General. Tests must be performed on insulation, jacket and completed cables in accordance with applicable standards as listed in these specifications. Where standards are at variance with each other or with other portions of this specification, the most stringent requirements, as determined by an engineer from the City, will apply. All tests must be conducted on cable produced for this order. Where cable insulation and/or jacket thickness preclude obtaining samples of sufficient size for testing, special arrangements must be made with the engineer to obtain samples of unprocessed materials directly from the extrusion feed bins which will be separately processed and prepared for tests.

(b) Number Of Tests. Insulation and jacket tests must be conducted on samples taken every 25,000 feet or fraction thereof of each conductor size. In no case must samples be taken closer than 15,000 feet apart.

(c) Flame Tests. Included in the tests will be a 70,000 BTU per hour flame test in accordance with IEEE 383. Reels to be tested will be selected at random.

(d) Test Reports. No cable may be shipped until certified copies of all factory tests have been reviewed and approved by the engineer.

(e) Acceptance. Samples must be taken from each reel and must successfully conform to all tests specified herein. Reels from which samples fail to conform, will be rejected.

PACKAGING

8. (a) Cable Marking. The cable must be identified by a permanently inscribed legend in white lettering as follows:

1/c No. (conductor size) AWG-600V-90°C-EPR or EPR/CSPE

The legend must be repeated at approximately eighteen (18) inch intervals on the outside surface of the cable parallel to the longitudinal axis of the conductor. A sequential footage marking must be located on the opposite side from the legend.

(b) All cable will be black pigmented. When three conductors (triplex) are specified, one conductor will be black, another will be red or black with a red tracer, the smaller of the conductors must have a green colored jacket and the three conductors must be triplexed with a 16"-18" lay. The insulation color must not be unduly affected by cable installation, or prolonged exposure to either direct sunlight or moisture.

(c) Reels. The completed cable must be delivered on sound substantial, non-returnable reels. Both ends of each length of cable must be properly sealed against the entrance of moisture and other foreign matter by the use of clamp-on cable caps,

such as the Reliable Electric Company neoprene cable cap No. 1405, or equal. The ends must be securely fastened so as not to become loose in transit. Before shipment, all reels must be wrapped with cardboard or other approved wrapping.

(d) Footage. Each reel must contain the length of cable as set forth in Table A of this specification. Alternate lengths may be considered.

(e) Reel Marking. A metal tag must be securely attached to each reel indicating the reel number, contract number, date of shipment, gross and tare weights, description of the cable, the total footage, and the beginning and ending sequential footage numbers. Directions for unrolling the cable must be placed on the reel with an approved permanent marking material such as oil-based paint or a securely attached metal tag.

TABLE "A"

CONDUCTOR		**INSULATION/JACKET THICKNESS**		**A-C TEST**	**REEL LENGTH**
AWG	**STRANDS**	**MILS**	**MILS**	**VOLTS**	**FEET**
14	7	30	15	5500	2000
8	7	45	15	5500	2000
6	7	45	30	5500	2000
4	7	45	30	5500	2000
2	7	45	30	5500	1000
0	19	55	45	7000	1000
00	19	55	45	7000	1000
000	19	55	45	7000	1000
0000	19	55	45	7000	1000
250 MCM	37	65	65	8000	1000

CITY OF CHICAGO
DECEMBER 5, 2016

LUMINAIRE: LED, VIADUCT/ELEVATED STRUCTURE RETROFIT

SUBJECT

1. This specification states the requirements for an LED (light emitting diode) luminaire. The luminaire will be for a one-to-one replacement of existing luminaires currently in use under viaducts and mounted under CTA elevated structures. The luminaires will have adjustable trunnion brackets for mounting. The luminaires will be capable of being integrated into a centralized lighting management system.

GENERAL

2. (a) References:

American National Standards Institute (ANSI)

- ANSI C78.377-2015, "American National Standard for Electric Lamps—Specifications for the Chromaticity of Solid State Lighting (SSL) Products"
- ANSI C82.77-10-2014, "American National Standard for Lighting Equipment—Harmonic Emission Limits—Related Power Quality Requirements"
- ANSI C136.2-2015, "American National Standard for Roadway and Area Lighting Equipment—Dielectric Withstand and Electrical Transient Immunity Requirements"
- ANSI C136.15-2015, "American National Standard for Roadway and Area Lighting Equipment—Luminaire Field Identification"
- ANSI C136.22-2004 (R2009, R2014), "American National Standard for Roadway and Area Lighting Equipment—Internal Labeling of Luminaires"
- ANSI C136.25-2013, "American National Standard for Roadway and Area Lighting Equipment—Ingress Protection (Resistance to Dust, Solid Objects and Moisture) for Luminaire Enclosures"
- ANSI C136.31-2015, "American National Standard for Roadway and Area Lighting Equipment – Luminaire Vibration"
- ANSI C136.37-2011, "American National Standard for Solid State Light Sources Used in Roadway and Area Lighting"

American Society for Testing and Materials(ASTM)

- ASTM B85/B85M-14, “Standard Specification for Aluminum- Alloy Die Castings”
- ASTM B209-14, “Standard Specification for Aluminum and Aluminum Alloy Sheet and Plate”
- ASTM B117-16, “Standard Practice for Operating Salt Spray (Fog) Apparatus”
- ASTM D523-14, “Standard Test Method for Specular Gloss”
- ASTM D1654-08, “Standard Test Method for Evaluation of Painted or Coated Specimens Subjected to Corrosive Environments”
- ASTM G154-12a, “Standard Practice for Operating Fluorescent Ultraviolet (UV) Lamp Apparatus for Exposure of Nonmetallic Materials”

Illuminating Engineering Society of North America (IES)

- ANSI/IES LM-63-02, “Standard File Format for Electronic Transfer of Photometric Data”
- IES LM-79-08, “Approved Method: Electrical and Photometric Measurements of Solid-State Lighting Products”
- ANSI/IES LM-80-15, “IES Approved Method: Measuring Luminous Flux and Color Maintenance of LED Packages, Arrays and Modules”
- ANSI/IES RP-8-14, “Roadway Lighting”
- ANSI/IES RP-22-11, "Tunnel Lighting"
- IES TM-21-11 (with Addendum B), “Projecting Long Term Lumen Maintenance of LED Light Sources”

Institute of Electrical and Electronics Engineers (IEEE)

- IEEE Standard 1789-2015, “IEEE Recommended Practices for Modulating Current in High-Brightness LEDs for Mitigating Health Risks to Viewers”

International Electrotechnical Commission (IEC)

- IEC 60529-2004, “Degrees of Protection Provided by Enclosures (IP Code)”

Underwriters Laboratories (UL)

- ANSI/UL 1598 (3rd Edition), "Luminaires”

(b) Submittal Requirements:

The bidder, if so requested, must submit the following information pertaining to the specified luminaire within fifteen (15) days of such request:

1. Completed Table A – Submittal Form

2. Product Data Sheets.

   Luminaire data sheets – including summary product description, dimensioned outline drawings, and nominal characteristics including but not limited to: initial luminous flux (lumens), input power (watts), input voltage range (volts), LED drive current (milliamps), correlated color temperature (kelvins), color rendering index, and weight (pounds).

   LED Driver data sheet – including information described in LED Driver Requirements Section 4(c).

   LED light source data sheet

   Surge protection device data sheet - if applicable

3. Photometric Performance Data

   The manufacturer must provide photometric calculations, as part of each luminaire's submittal package, that demonstrate the luminaire's photometric performance will meet or exceed the photometric requirements listed in this specification. The submitted lighting calculations must include point-by-point illuminance, luminance and veiling luminance data, as well as listings of all indicated averages and ratios. Photometric reports must include the following information and be in accordance with the standards listed below:

   IES LM-79-08 photometric report that includes measured values for initial luminous flux, input power, correlated color temperature, and color rendering index.

   ANSI/IES LM-63-02 electronic format photometric file that corresponds to the LM-79 report.

   LM-63 photometric calculations that demonstrate compliance with the illumination requirements specified herein using the LM-63 file. Calculation grids and observer locations not specified herein must be in accordance with ANSI/IES RP-8-14.

   IES TM-21-11 calculations that derive the lumen maintenance (lamp lumen depreciation or LLD) factor applied to photometric calculations specified herein.

ANSI/IES LM-80-15 and in-situ temperature measurement testing (ISTMT) reports containing data used in TM-21 calculations must also be submitted. TM-21 calculations must apply to the maximum LED case temperature from ISTMT, shall not extrapolate beyond six times the duration of available LM-80 test data, and must be submitted in the spreadsheet format of the ENERGY STAR TM-21 calculator (https://www.energystar.gov/products/spec/luminaires_specification_version_2_0_pd).

LM-79, ISTMT, and LM-80 reports must correspond directly to submitted luminaires, and must be produced by test laboratories that satisfy the Testing Laboratory Requirements of the DesignLights Consortium (www.designlights.org/content/QPL/ProductSubmit/LabTesting).

ISTMT must be conducted in accordance with the DesignLights Consortium Manufacturer's Guide (https://www.designlights.org/content/qpl/productsubmit).

ISTMT shall be conducted in an ambient temperature of 25 ± 5 °C. Ambient temperature variations above or below 25 °C shall be respectively subtracted from or added to temperatures recorded at points on the luminaire.

4. Safety Certification - file number indicating compliance with UL 1598. Applicable testing bodies are determined by the US Occupational Safety Health Administration (OSHA) as Nationally Recognized Testing Laboratories (NRTL) and include: CSA (Canadian Standards Association), ETL (Edison Testing Laboratory), and UL (Underwriters Laboratory).

5. Vibration Testing - the luminaire must be tested in accordance with ANSI C136.31 at a vibration level of 5G.

6. Product Samples - at least two samples of each luminaire that the contractor proposes to use must be submitted to the City. All samples must be representative production units and be supplied at no cost to the City.

(c) Assembly.
Each luminaire must be delivered completely assembled, wired, and ready for installation.

(d) Warranty.
The luminaire manufacturer must warrant the performance and construction of luminaires to meet the requirements of this specification, and must warrant all parts, components and appurtenances against defects due to design,

workmanship or material developing within a period of ten (10) years from the date of acceptance by the City.

- Failure of 10% or more of the LED light sources (packages or arrays/modules) in a luminaire will constitute a luminaire failure.
- The warranty must apply for application on all of the City's existing electrical systems, both grounded and ungrounded.
- During the warranty period the City may, from time to time, test a random sampling of 7-10 luminaires for verification of light output per IES LM-79 and to test dimming functionality for a given luminaire population. The percentage of luminaires not performing as required in the random sampling will be applied to the total population quantity to determine the number of new luminaire replacements that must be delivered to the City by the manufacturer, without expense to the City.

(e) Manufacturing Experience and Capacity
The manufacturer must demonstrate at least a five year history of manufacturing LED roadway and outside area luminaires by providing a list of prior projects with project description, date, location, quantities and reference contact information. The manufacturer must also demonstrate the capacity to supply the quantities required for the contract in a timely man

CONSTRUCTION

3. (a) Weight. The net weight of this luminaire must not be more than 30 pounds.

(b) Housing. The housing must be precision die-formed, seam welded aluminum. The aluminum must be marine-grade (3003 alloy or equivalent). Alternate materials will be considered. The housing must have integral heat sink characteristics, such that all enclosed components will operate within their designed operating temperatures under expected service conditions. All heat shields and heat sinks will be integral to the luminaire.

The housing will be designed to encourage water shedding. The housing must be designed to minimize dirt and bug accumulation. The housing will have the general appearance of Electrical Standard Drawing 981.

A wiring compartment capable of accepting a .75 inch threaded conduit fitting to accommodate an electrical whip must be included.

(c) Mounting brackets. Each housing must have two trunnion type brackets. One bracket must be mounted to each end panel of the housing with appropriate screws or bolts. The brackets will allow the luminaire to be positioned up to 90˚ in either direction from the horizontal. The brackets must be marked on the

outside indicating the degrees of angle. The brackets will provide for positive locking in the desired position.

(d) Door and Lens. A replaceable high impact UV resistant polycarbonate drop lens will cover the LED array. This lens will be attached to a door. The door must be of the same aluminum as the housing. The door will be hinged on one side such that when opened the door will fall open toward the roadway. The other side of the door will be attached to the housing with latches, allowing tool-less entry. The door will allow easy access to the driver and terminal strip (unless the terminal strip is in a separate accessible wiring compartment).

In order to make a dustproof assembly, a gasket of silicone rubber or other specifically approved material must be provided.

(e) Hardware. All fasteners necessary to make a firm assembly must be furnished in place. All hardware must be of stainless steel, copper silicon alloy or other non-corrosive metal, and where necessary must be suitably plated to prevent electrolytic action by contact with aluminum.

(f) Finish. The luminaire must have a polyester powder coat with a minimum 2.0 mil thickness. Surface texture and paint quality will be subject to approval. Color must be as specified in the purchase order. A paint chip must be submitted as a sample upon request. The finish must exceed a rating of six per ASTM D1654 after 1000 hours of testing per ASTM B117. The coating must exhibit no greater than 30% reduction of gloss per ASTM D523 after 500 hours of QUV testing at ASTM G154 Cycle 6.

(g) Ingress Protection. The luminaire housing must have an ingress protection rating of IP54 or better as described in ANSI C136.25-2013. The optical system must have a rating of IP66 or better.

(h) The luminaire must be listed for wet locations by a U.S. Occupational Safety Health Administration (OSHA) Nationally Recognized Laboratory (NRTL) and have a safety certification and file number indicating compliance with UL 1598.

(i) The luminaire must be rated to operate between -40° to +50° Celsius.

(j) The luminaire must meet the requirements of ANSI C136.22 for internal labeling.

(k) The luminaire must be labeled for field identification according to ANSI C136.15.

ELECTRICAL COMPONENTS

4. (a) LED Optical Array. The LED arrays must be optimized for the required roadway

photometrics. The arrays must be properly secured at the factory and must not require field adjustment for optimum photometric performance.

(b) Terminal Board. A terminal block of high grade molded plastic of the barrier or safety type must be mounted within the housing in a readily accessible location. It must provide all terminals needed to completely prewire all luminaire components.

The terminal board must have plated copper or plated brass, clamp-type pressure terminals of an approved type for "line" connections, to accommodate wire sizes from #12 to #8 A.W.G. The terminals for connection of internal components must be either the screw-clamp or quick disconnect type.

(c) Driver Requirements:

1. Voltage. The electronic driver must operate at a nominal input voltage range of between 120 and 277 volts, 60 Hertz. It must automatically sense the input voltage and adjust the output accordingly. The City uses nominal input voltages of 120, 208, and 240. When operated at any supply voltage between 80% and 110 % of its rated supply voltage, a driver must supply proper current and/or voltage regulation that equals or exceeds the values specified by the manufacturer.

2. Electrical Safety. Luminaires must operate at or below the Low- Risk Level, as defined in Figure 18 of IEEE 1789-2015.

3. Power Factor. The power factor of the driver over the design range of input voltages specified above must be in accordance to ANSI C82.77-2014. Power factor must be equal to or greater than .9.

4. Total Harmonic Distortion. The driver input current must have Total Harmonic Distortion (THD) specified in accordance to ANSI C82.77-2014. Total harmonic distortion must be less than 32%.

5. Thermal Protection. The driver must be thermally protected to shut off when operating temperatures reach unacceptable levels.

6. Electromagnetic Interference. Luminaire must comply with the FCC radiation emission limits for Class B digital devices given at 47 CFR 15.109.

(d) Electrical Transient Immunity.

1. Dielectric Withstand Testing. Luminaire must meet the performance

requirements specified in ANSI C136.2-2015 for dielectric withstand, using the DC test level and configuration.

2. Electrical Transient Immunity. Luminaire must meet the performance requirements specified in ANSI C136.2-2015 for electrical transient immunity, using the Enhanced (10kV/5kA) combination wave test level.

3. Transient Immunity Testing Requirements.

   During electrical transient immunity testing, the device under test (DUT) must be connected to the power source through a series coupler/decoupler network(CDN), using a two-wire (hot or hot/neutral) connection between both the power supply and the CDN input and the CDN output and the DUT.

   If the AC main is used to power the DUT, the input waveform must be characterized and documented both before and after electrical transient immunity testing, with the DUT operating at rated full output.

   For pre-test DUT characterization, the diagnostic measurements must, at a minimum, include real power, input current(RMS), power factor, and current distortion factor (THD) when operating at full output.

4. Manufacturer must indicate whether failure of the electrical transient immunity system can possibly result in disconnect of power to the luminaire.

(e) Wiring. All components must be completely factory wired with non- fading, color coded leads. All wires within a single circuit path must be of the same size. No wire nuts will be allowed. No unnecessary splices will be allowed. The use of wiring smaller than #16 AWG will require the written approval of the Commissioner. Quick disconnects must be provided for all components. All wires must be properly terminated.

(f) Component Mounting. All electrical components must be securely mounted in such manner that individual components can be easily maintained or replaced. Permanent straps or tie-wraps will not be permitted. The entire assembly should be easily disconnected and removed for replacement.

PHOTOMETRIC REQUIREMENTS

5. (a) Color Temperature. The correlated color temperature must be a nominal 3000 kelvin.

(b) Lumen Maintenance. LED arrays must deliver a minimum of 90% of the initial lumen output at 36,000 hours of operation.

(c) Light Loss Factor. The light loss factor must be calculated as per IES RP- 8-14 using the following three factors.

1. LED Lumen Depreciation (LLD). Calculated at 60,000 hours as per Section 2(b)3. Luminaires with less than 10,000 hours of available LM-80 test data may be submitted for consideration, but must be indicated as such.
2. Luminaire Dirt Depreciation.(LDD). Should be .86.
3. Luminaire Ambient Temperature Factor (LATF). Should be .96.

(d) Roadway Luminance:

Average Luminance	2.5 cd/m2
Uniformity Ratio avg/min	3:1
Uniformity Ratio max/min	5:1
Max veiling Luminance	0.5

(e) Roadway Conditions. The luminaires must meet the requirements for the following physical conditions:

Right-of-way	66’
Curb-to-curb	46’
Sidewalk	10’ each side
Mounting height	13’
Tilt	45°
Setback	10’
Arm length	0’
Spacing	30’
Pavement	R3

PACKAGING

7. (a) Packing. Each luminaire assembly must be securely packed in a suitable carton so as not to be damaged in shipment and handling.

(b) Marking. Each carton containing a luminaire must be clearly marked on the outside in letters not less than three-eighths (3/8) inch tall with the legend: "LUMINAIRE, LED, VIADUCT". The appropriate City Commodity Code Number, the name of the manufacturer, the date of manufacture, and the contract number under which the luminaire is furnished shall also be listed.

CITY OF CHICAGO

DEPARTMENT OF WATER MANAGEMENT

SPECIAL PROVISIONS

FOR WATER AND SEWER MAIN CONSTRUCTION

Appendix A to Book 3

***Note: All products noted within these Special Provisions must be verified to be fully in compliance with this Contract's Buy America Provisions.**

DWM Construction Requirements	
*Section 31 23 10	Excavation, Trenching and Backfilling
*Section 31 23 19	Dewatering Excavations
*Section 33 07 00	Insulation for Water Main Pipe and Appurtenances
*Section 33 11 15	Thrust Restraint for Water Main Piping
*Section 33 13 00	Hydrostatic Testing and Disinfecting Water Mains
*Section 03 20 00	Concrete Reinforcing (For Water Main applications ONLY)
*Section 03 30 00	Cast-In-Place Concrete (For Water Main applications ONLY)
*Section 33 12 16	Water Main Control Valves

PAGE IS INTENTIONALLY LEFT BLANK

The Department of Water Management - Water Section

In order to accommodate CDOT's proposed bridge replacement, the DWM will allow CDOT's contractor to relocate approximately 535 feet of 12-inch water main in W Irving Park Road. This Department will perform the final connections to the existing water mains as well as valve operations. Additionally, DWM crews must abandon approximately 760-feet of 8-inch water main, approximately 450 feet of 12-inch water main, and install one (1) fire hydrant on the southern frontage of W Irving Park Road at 800 feet west of the west property line of N Rockwell Street to accommodate the subject project. CDOT's contractor is responsible excavation/shoring and all restoration for all of the above-mentioned work.

All water main restrained joint and bridge hanger assembly calculations shall be Reviewed and approved by the DWM before construction.

CDOT's contractor installing the water main shall perform the following:

- Submit a complete list of the shop drawings (submittals) for all water main materials to be used to complete the water main installation at least 60 days prior to starting the work. Once the list is approved, the shop drawings (submittals) shall be sent to Brian McGahan at Brian.Mcgahan@ctrwater.net for review.
- Notify the Force Account Construction Manager at FACM@ctrwater.net, two (2) weeks prior to the start of the water main work, so a resident engineer can be assigned to the project.
- Obtain a "B-Permit" prior to construction from the City of Chicago, Department of Buildings, Plumbing Permit and Plan Section, City Hall, 121 North LaSaIIe Street, Room 906, Chicago, Illinois 60602.
- Submit as-built drawings within two (2) weeks of completion of the work. The as-built drawings should be submitted to the Department of Water Management, Bureau of Engineering Services, Jardine Water Purification Plant, 1000 E. Ohio Street, Room 301, Chicago, Illinois, 60611, *attention* to Brian McGahan or Brian.Mcgahan@ctrwater.net.

Failure to comply with these requirements may result in additional expenses to the project to verify that all work conforms to the DWM's Standards.

There are two (2) existing valve basin frames and lids, and three (3) water shut-off/valve boxes within the proposed improvement limits. Vertical adjustment that may be required to these facilities shall be performed by CDOT's contractor. All new curb installation adjacent to fire hydrants must be painted 'safety yellow' for 15 feet on each side of the fire hydrant except where the 15-foot dimension intersects a crosswalk, driveway or similar feature. It is also requested that the final payment to the contractor be withheld until this Department has inspected and found the adjusted facilities acceptable. Please contact Mr. Albert Wtorkowski

of the Department of Water Management at Albert. Wtorkowski@cityofchicaqo.org in order to schedule the final inspection of any adjusted water facilities.

There are various water mains and appurtenances within the limits of this project. All proposed underground facilities must be installed in such a manner to provide the following required clearances: The minimum vertical clearance (edge-to-edge) from all water mains is 18 inches. For feeder mains (water mains 16 inches and larger), the minimum horizontal clearance (edge- to-edge) is five (5) feet, and for grid mains (water mains less than 16 inches), the minimum horizontal clearance (edge-to-edge) is three (3) feet. No proposed above ground facility (tree, planter box, light pole, etc.) can be closer than five (5) feet (edge-to-edge) from a water main or closer than two to three (2-3) feet (edge-to-edge) from a water service. Should the DWM require access to its facilities, it will not be responsible for the costs to remove or support any above ground structures adjacent to its facilities.

Proposed trees must not be planted above or within 5 feet of the exterior pipe wall for all water mains 24-inch in diameter and larger. This 5-foot rule excludes mains that are separated from the tree by a hardscape feature or other root growth limiting conditions such as water mains located in the street.

This Department discourages tree planting over water mains that are less than 24-inches in diameter located in the parkway, but if necessary, will allow trees with a maximum mature height of 30 feet and a maximum mature root depth of 2 1/2 feet. Potential plantings that meet this requirement include the following:

1. Ornamental shrubs or bushes meeting the mature height and mature root depth stated above.
2. Flowers or other non-woody herbaceous plants.
3. Above ground, removable planting containers that can be moved by construction equipment in the event that water main repair is required.

Existing trees planted above water mains that do not meet these requirements do not need to be removed. However, if such existing trees are removed, all proposed trees installed in their place must meet the above mentioned requirements. Should it be necessary for the DWM to access any of its facilities, the Department shall only be responsible for typical pavement, sidewalk, and hydroseed restoration.

If construction requires the use of water from a City fire hydrant, or adjustments or repairs are required to any City sewer facilities in proximity to the project site, permits must be obtained from the Department of Water Management, Water and Sewer Sections.

All sewer installations must meet IEPA separation requirements for water and sewer pipes. All proposed/replaced sewer laterals from catch basins/inlets, sewer mains, and private drains (collectively known as “sewer facilities”) that are parallel to water mains, services or fire hydrant leads (collectively known as “water facilities") that are less than 18 inches below the water facility and have less than 10 feet of horizontal separation from the outside edge of the water facility must be made out of ductile iron/water main quality pipe for 10 feet on either side of the outside edge of the water facility. Additionally, all sewer facilities that cross perpendicularly below water facilities with less than 18 inches vertical separation must be made out of ductile iron/water main quality pipe for 10 feet on either side of the outside edge of the water facility. If any sewer facility crosses perpendicularly above a water facility, then the sewer facility shall be at least 18 inches above the water facility and the sewer facility must be made out of ductile iron/water main quality pipe for 10 feet on either side of the outside edge of the water facility. Sewer laterals that require ductile iron/water main quality pipe shall be ductile iron/water main quality pipe from the catch basin to a point 10 feet beyond the edge of the water facility.

Extreme caution is to be taken to ensure that no facility owned and maintained by this Department is damaged during construction. If damage occurs to any facilities, CDOT will be held responsible for the cost of repairing or replacing them.

NOTICE

of

Water Service Interruption

Project:

Street Location:

DEAR OWNER OR OCCUPANT

The water supply to your house, building and / or property will be temporarily interrupted due to water system improvement work in your neighborhood.

DATE: _____

BETWEEN the HOURS of_____and_._____

Please contact_____ at phone no.: _____

with any questions or concerns.

Thank you in advance for your patience. Department of Water

Management, City of Chicago

SECTION 31 23 10
EXCAVATION, TRENCHING AND BACKFILLING

PART 1 – GENERAL

1.1 DESCRIPTION OF WORK

This specification includes the requirements for excavation, bedding, backfilling and compaction, of utility trenches for water and sewer mains and associated appurtenances.

1.2 WORK OF THIS SECTION SPECIFIED ELSEWHERE

A. Section 05 10 00 - Structural and Miscellaneous Steel.
B. Section 31 23 19 - Dewatering Excavations.
C. Contract Special Provisions - Landscape Restoration and Removal and Disposal of Unsuitable Materials.

1.3 REFERENCES

A. CDOT Regulations for Openings, Construction and Repair in the Public Way (CDOT Specifications), latest edition.
B. IDOT Standard Specifications for Road and Bridge Construction (SSRBC), latest edition.
C. IDOT Supplemental Specifications and Recurring Special Provisions (SSRSP), latest edition.
D. ASTM D1557 - Laboratory Compaction Characteristics of Soil, latest edition.
E. Department of Labor, Occupational Safety and Health Administration 29 CFR Part 1926, Occupational Safety and Health Standards – Excavations; Final Rule (OSHA), latest edition.

1.4 DEFINITIONS

A. Soil types are defined as follows.

1. Trench Excavation. Excavation of soil for the purpose of installing water and sewer mains, their appurtenances, and for the restoration of surface features. The excavated material may be classified as either clay or sandy soil, a mixture of each, and may contain varying mounts of loam, silt, gravel, organic material, or rock fragments less then one (1) cu yd in volume. Trench excavation excludes all material defined as Rock Excavation and Unsuitable Soil.

2. Rock Excavation. Excavation of naturally occurring deposits of limestone, sandstone, shale or other indigenous rock occurring as bedrock, rock ledges, outcroppings, or boulders, one (1) cu yd or larger in volume necessitating removal by the use of systematic drilling, expansive jacks, or backhoe mounted pneumatic hole punchers or rock breakers.

3. Unsuitable Soil Materials. This soil material includes varying amounts of material classified as slag, cinders, trash, debris and rubble; organic or contaminated soil and material; asphalt and concrete pavements (including aggregate sub-base); sidewalks and curbs; concrete slabs concrete or masonry foundations; metal beams, bracing, and sheet piling; or similar matter.

1.5 SUBMITTALS

A. Submittal requirements and procedures for Shop Drawings, Product Data, Records and Samples must be submitted in accordance with Book I – Terms and Conditions for Construction, latest edition, issued by the City of Chicago, Department of Procurement Services.

B. Provide to the Commissioner copies of all contractual agreements, permits and / or licenses for proposed disposal sites for all material and waste removed from the job site.

C. Shop Drawings and supporting calculations for excavation support systems must be submitted to the Commissioner for review and approval.

1. Excavation Support Systems:

a. Prepare and submit a written schedule and procedure, along with detailed drawings, of the proposed excavations and excavation support systems.

b. Include installation procedures; method of concrete placement; excavation sequence; interface details; protection measures for existing structures and facilities; instrumentation and monitoring procedures to check performance, sequence, and method of removal; and contingency plans for excessive wall or foundation movements.

c. The program must take into account that excavations cannot extend beyond the right-of-way into adjacent properties above or below grade, unless otherwise indicated. Where Contractor requires the installation of part of excavation protection system on private property, the Contractor will be solely responsible for securing permission from adjacent property owners to install such temporary and permanent systems.

i. Any such permission from adjacent property owners must be in writing, and the owner's signature, granting such permission, must be witnessed and properly notarized. Certified copies of all such permissions must be submitted to the Commissioner for record purposes.

2. Shop Drawings: Submit Shop Drawings and specifications for support systems, lagging, and internal bracing. Include the following:

   a. Specific description of field quality control measures.

   b. Details of interface with permanent structures.

   c. Details of bracing struts and wales, if used, and the proposed installation procedures, including method and sequence of preloading.

   d. Details of required preloading systems, pre-stressing systems, load measuring facilities, systematic schedule of preloading and pre-stressing operations, and sequence of construction.

   e. Method and details for securing lagging in support system openings.

   f. Proposed method of providing for utility penetrations.

   g. Assembly and erection details of members and connections for the system.

3. Plating of Excavations: When requested submit design calculations stamped by a Structural Engineer Licensed in the State of Illinois as proof of the structural integrity of the plating provided.

4. Calculations: Submit appropriate design calculations to support Shop Drawings. Include maximum theoretical deflections of supporting members. Include calculations indicating the expected magnitude of vertical and lateral movement.

5. Professional Engineer's Certification: The excavation support systems program, Shop Drawings, calculations, and test reports must be prepared, sealed, and signed by a Structural Engineer Licensed in the State of Illinois.

a. Where CTA/METRA or other private railroad company approval for excavation support or shoring is required, submit calculations and related documents prepared, signed, and sealed by a Structural Engineer Licensed in the State of Illinois.

D. The Contractor, before starting work, must submit to the Commissioner for approval, a layout of his construction procedures and the equipment to be used in maintaining the trees in place without damage.

E. Provide for CLSM (Flowable Fill) backfill quality control (QC) and quality assurance (QA) in accordance with the IDOT SSRSP, Check Sheet #31 "Quality Control Quality Assurance of Concrete Mixes".

PART 2 – PRODUCTS

2.1 GENERAL

A. Pipe bedding and trench backfill material must conform to the requirements and gradation specified in Section 1003, Fine Aggregates (FA), or Section 1004, Coarse Aggregates (CA), of the SSRBC.

B. Coarse Aggregate (CA) material classified, as Chert or Novaculite Gravels, or Slag from any source, are not permitted for use as bedding or backfill material**.**

C. Fine Aggregate (FA) material classified as Silica Sand, Slag Sand from any source, or Construction Debris Sand, are not permitted for use as bedding or backfill material.

D. All material must be dry and free of organic matter, clay, garbage, paper, wood or similar material, boulders or large particles of frozen material.

2.2 PIPE BEDDING

A. Pipe Bedding for Water Main Construction

Coarse aggregate (CA) material classified as mechanically crushed gravel, mechanically crushed stone, mechanically crushed limestone, or mechanically crushed recycled concrete conforming to IDOT gradation CA-16 for water mains 16 inches in diameter or smaller, CA-11 for water mains larger then 16 inches in diameter, unless otherwise authorized by the Commissioner. Material must be washed, angular, have uniform properties, and non- corrosive. Material must have a pH range between 7.5 and 10.

B. Pipe Bedding for Sewer Main Construction

Coarse aggregate (CA) material classified, as crushed gravel, crushed stone or crushed concrete must conform to gradation CA-11, unless directed otherwise by the Commissioner. Material must have a pH range between 7.5 and 10.

2.3 BACKFILL MATERIAL

A. Backfill Material for Water Main Construction

1. Coarse aggregate (CA) material classified as mechanically crushed gravel, mechanically crushed stone, mechanically crushed limestone, or mechanically crushed concrete conforming to IDOT gradation CA- 16 unless authorized otherwise. Material must be washed, angular, have uniform properties, and non-corrosive. Material must have a pH range between 7.5 and 10.

B. Backfill for Sewer Construction

1. Fine aggregate (FA) material classified as sand, crushed concrete sand or stone sand must conform to gradation FA 6 unless directed otherwise by the Commissioner.

C. Controlled Low Strength Material, CLSM (Flowable Fill Material)

1. Materials for Flowable Fill must meet requirements of IDOT SSRBC Sections 593 and 1019 for Controlled Low Strength Material, CLSM.

a. Flowable fill material placed adjacent to water mains must be of a non-fly ash type mix design, mix # 2.

2.4 GEOTEXTILE FABRIC

A. Geotextile fabric must be Fabric for Silt Filter Fence and must conform to the requirements of Section 1080.02 in the SSRBC.

2.5 AGGREGATE FOR STABILIZATION OF TRENCH BOTTOMS

A. When required aggregate used to stabilize trench bottoms must have an aggregate such that the majority of the material passes a 1½ to 2½-inch sieve, with no more than 10% of the material passing the No. 16 sieve. The quality of the aggregate must meet requirements established for aggregate bedding.

PART 3 – EXECUTION

3.1 WORK AREA PREPARATION

A. Existing Work Area Condition

1. All information on subsurface exploration available to the Commissioner, if any, will be made available to the Contractor for examination. However, the Commissioner in no way takes responsibility for, the interpretation, accuracy, or thoroughness of the information. It will be the responsibility of the Contractor to make such subsurface explorations as deemed necessary, to supplement information provided by the Commissioner, at no additional cost to the City of Chicago.

2. Prior to excavating, thoroughly investigate the limits of the proposed trench to ascertain the existence and location of any underground structures, existing utilities or other items that might interfere with the pipe installation. Notify the Commissioner of any obstructions that will prevent the installation of the pipe or appurtenances as indicated on the Drawings.

B. Clearing Work Area

1. Before starting trench excavation, all obstructions, which must be removed or relocated, must be cleared. Pavement, curbs, walks, trees, shrubs, utility poles, and other structures, which are to be preserved, must be properly braced and protected. Unless otherwise shown or directed by the Commissioner, all trees and large shrubs must be preserved with minimal damage inflicted on the root structure. When required, small trees and shrubs may be removed and replaced with equivalent specimens if approved in advance by the Commissioner.

C. Segregation and Disposal of Soil Material

1. Topsoil suitable for final grading and landscaping, and excavated material suitable for backfilling, as described by the Contract Special Provisions may be stockpiled separately within the Work Area if approved by the Commissioner.

2. Surplus excavated material and excavated material unsuitable for backfilling, final grading, and landscaping, must be transported off of the Site and disposed of in disposal areas obtained by the Contractor and approved by the Commissioner.

3. Excavated material must not be stockpiled along the route of the work unless authorized beforehand by the Commissioner.

D. Pavement Removal

1. The Contractor must saw cut all concrete and asphalt pavements to their full depth prior to breaking and removing the pavement. On pavements consisting of an asphalt overlay on a concrete base, the Commissioner reserves the right to order the removal of up to 6 additional inches beyond the edge of the concrete base. This additional asphalt removal must be removed to a neat saw cut edge and will be considered incidental to the Work.

2. Utilizing drop weight equipment for the purpose of breaking the pavement is not permitted.

E. Protection or Removal of Existing Trees

1. Comply with Contract Specifications for protection of trees, shrubs, and other improvements.

2. The Contractor is not permitted to remove trees beyond the limits of the trench excavation except as specified in these Specifications, or as shown on the Plans, or as ordered by the Commissioner.

3. The Contractor must arrange his construction operations and use the necessary equipment required, so as not to remove or damage any existing trees due to the Work to be performed under this Contract.

4. To protect the trunks of existing trees from damage, the Contractor must place 2" x 4" boards, six (6) feet long, vertically and about 6 inches apart around all trees located in the parkways along the route of the work. The boards must be held in place by wire looped around the circumference of the tree trunk. After completion of all work, the protective boards and wires must be carefully removed.

5. Any pruning of trees and roots required to permit the operation of the Contractor's equipment must be kept to a minimum, subject to the approval of the Commissioner, and must be done symmetrically by a licensed arborist. The arborist is required to obtain a permit from the City of Chicago, Bureau of Forestry, Plans and Permits Section of the Department of Streets and Sanitation, to trim and spray or in any way affect the general health or structure of trees in the public way. Prior to this approval, the Bureau will conduct an investigation at the sites of the proposed sewer. They will work with the Commissioner and the Contractor, and request 48-hour notice prior to starting any tree work.

F. Trench Excavations Over 12-feet Deep

1. Comply with CDOT Specifications Chapter 4, "Excavation Pavement Removal" for trenches over twelve (12) feet deep.

G. Excavating Over or Adjacent to Existing Utilities

1. The Contractor must verify the location of existing utilities in the vicinity of the work before starting construction. The Contractor is responsible for protecting, and repairing utilities damaged by the work under of this contract, at no additional cost to the City. The Contractor must coordinate all work with the owner of the utility.

H. Erosion Control

1. Install geotextile fabric under each storm inlet, catch basin and sewer manhole cover to prohibit dirt, debris and backfill material from entering the sewer system, but to permit drainage. The geotextile fabric is to be maintained until restoration is completed. After restoration is completed, remove the geotextile fabric.

I. Plating of Excavations

1. Unattended excavations in public streets, alleys, driveways, and walkways necessitated by the work must be plated, if the excavation has not been backfilled, or a temporary paved surface has been provided, or specifically authorized otherwise by the Commissioner. Open excavation(s) that are considered unattended excavation(s) include, but are not limited to, the following:

    a. Open excavations not attended by Contractor personnel during Contractor's working hours.
    b. Open excavations during Contractor's non-working and overnight hours.
    c. Any other condition determined by the Commissioner as unattended excavation(s) requiring Plating in accordance with these specifications.

2. Steel Plate(s) must be large enough to safely span the excavation with sufficient overlap beyond the edge of the excavation to provide firm support as appropriate for the type of pavement and soil encountered. Plate(s) must be firmly bedded and secured to the adjacent pavement to prevent rocking or movement, and of adequate thickness to carry anticipated loads. When plating is left in place during off-work periods, or if the Commissioner feels vehicular or pedestrian safety may be compromised, a bituminous ramp is to be provided at the perimeter of the plate(s) as appropriate to provide a smooth transition

between the surface of the plate(s) and the adjacent pavement or walkway.

3. Plating subjected to vehicular traffic must be capable of carrying AASHTO H-20 traffic loading without movement or excessive deflection. The plating must be secured to the adjacent paved surface in such manner so as to prevent rocking or other movement which could expose the excavation. The name of the Contractor must be indicated on both sides of the plating.

4. When steel plates are used and left in place beyond normal working periods, a bituminous ramp must be provided at the perimeter of the plate(s), to provide a smooth transition between the surface of the plate(s) and the adjacent street pavement or walkway, unless authorized otherwise.

5. Plating of excavations is not intended as a substitution for providing traffic control, which must be provided in accordance with the Contract Specifications.

J. Protection of Existing Water Main from Contamination

Protect existing water mains from contamination by groundwater, dirt, debris, or other foreign material:

1. Prevent groundwater and surface water, dirt, debris, and other foreign material from entering the open pipe.

2. Provide water tight temporary closure of pipe before leaving work site at the end of the work day.

3. Equipment, cables, hoses, supports and all appurtenant equipment placed in the water main must be thoroughly cleaned of dirt and debris, and disinfected with chlorine solution with a chlorine concentration of at least fifty (50) parts per million.

4. Workers entering pipe must wear clean temporary disposable coveralls.

5. Install foot bath and brush and have workers entering the pipe clean footwear with chlorine solution with a chlorine concentration of at least fifty (50) parts per million.

3.2 EXCAVATION PROTECTION

A. General Requirements

1. Excavations must be protected in accordance with applicable rules, laws

and regulations of Federal, State and City ordinances applicable to underpinning, shoring of excavations, and other work affecting adjoining property and the safety of worker, but must not be less than the standards and regulations established by OSHA.

2. Structural support systems are required for all excavations exceeding five (5) feet in depth. Structural support systems are to be used in all excavations in soils that are determined to be unstable or subject to cave-ins, regardless of the depth of the excavation.

3. Protective systems for any excavation exceeding ten (10) feet in depth must be designed and approved by a Structural Engineer Licensed in the State of Illinois.

4. The Contractor must remove and replace, or provide the means to support any surface features when their location posses a hazard to workers in the excavation.

5. Whenever excavations cross the location of an existing underground utility, the Contractor must proceed with caution and use appropriate methods of excavation to avoid damaging the utility. The Contractor is responsible for coordinating all work with the owner of the utility.

6. Ramps, runways or ladders must be provided for ingress and egress by workers from excavations exceeding four (4) feet in depth in accordance with OSHA.

7. Surface or ground water entering excavations must be controlled by the use of appropriate equipment. If the trench interrupts the natural flow of surface water, diversion ditches or dikes must be used.

B. Protection of Adjacent Structures

1. When the stability of adjoining buildings, walls, sidewalks, pavements or other structures are endangered by the excavation operations, structural support systems such as shoring, bracing or underpinning must be used to ensure the stability of the structure.

2. The Contractor is responsible for posting and issuing all notices required to inform adjacent or adjoining property owners or other parties and such notice or notices must be served in sufficient time as not to delay the progress of the Work under this Contract.

3. Excavation below the foundation of an adjacent structure requires either of the following:

a. A Structural Engineer or Professional Engineer Licensed in

the State of Illinois has determined that the structure is located far enough away from the excavation so as to be unaffected, or

b. A Structural Engineer Licensed in the State of Illinois has designed and approved a structural support system to provide adequate protection to the existing structure.

C. Structural Support Systems

Structural support systems may consist of pre-engineered systems such as aluminum hydraulic shoring, trench shields, trench boxes, or systems constructed on the job site such as timber or steel shoring or steel sheet piling.

1. Pre-Engineered System

a. Pre-engineered structural support systems installed in accordance with the manufacturer's recommendations do not require certification by a Structural Engineer when trench depth is less than twenty (20) feet. However, the Commissioner, at his sole discretion, may require a manufacturer's certification indicating the support system is suitable for the intended use and site conditions.

b. Pre-engineered structural support systems will require analysis and certification by a Structural Engineer Licensed in the State of Illinois, when trench depth exceeds twenty (20) feet.

2. Site Constructed Systems

a. Construct steel sheet piling system in accordance with Section 05 10 00 – Structural and Miscellaneous Steel.

b. Structural support systems built in place and made of timber constructed in accordance with OSHA Standards, do not require certification by a Structural Engineer licensed in the State of Illinois, provided trench depths shown in the OSHA Standard, relative to the soil type at the site, are not exceeded.

c. If the OSHA Standard is not followed for timber shoring and the depths of trenches exceed those in the tabulated data; or soil conditions have been determined to be substantially

different that those given in the OSHA Standard; the design must be performed and certified by a Structural Engineer Licensed in the State of Illinois.

d. A structural support system built in place and consisting of materials other than a timber shoring systems will require design and certification by a Structural Engineer Licensed in the State of Illinois.

e. When close-sheeting is used, it must be driven so as to prevent adjacent soil from entering the trench either below or through such sheeting. Tight-sheeting must be used in that portion of the excavation in or along streets or alleys below the intersection of a 1 to 1 slope line from the nearest face of the excavation to the edge of the pavement.

f. Sheeting must not be in contact with existing pavement but must bear uniformly against the sides of the excavation.

3. Where structural support systems, such as steel or wood sheeting are used for stabilizing excavations, the width of the trench may be increased as necessary to accommodate installation of the work. When soils in the lower limits of the excavation have been determined to have adequate stability; the Contractor may end the shoring elements above the bottom of the excavation. If soil begins moving into the excavation below the shoring during construction, the Contractor is solely responsible for making corrections to the excavation and for lowering the shoring, at his own expense.

4. When structural support systems are required to be left in place, they must be cut off at the same elevation as the bottom of the water main, unless otherwise directed by the Commissioner. Bracing that is to remain in place must be driven up tight. The right of the Commissioner to request sheeting and bracing to be left in place, is not meant to construe any liability or obligation on behalf of the Commissioner to issue such orders.

5. Structural support systems that are not to be left in place may be removed only when the excavation has been backfilled to such an elevation so as to prevent the collapse of the sides of the excavation. Any voids created by the removal of the structural support system members, must be filled and compacted in an acceptable manner.

3.3 EXCAVATION

A. Trench Excavation (Open Cut)

1. The width of the trenches must provide adequate space for workers to

place and join the pipe properly, and must be kept to the minimum practical width. Unless otherwise approved by the Commissioner, the total clear width of the trench at the level of the top of the pipe and at grade must be at the Neat Lines as detailed on the Drawings.

2. The Contractor must excavate a minimum of 6-Inches below the bottom of the pipe unless otherwise shown, specified, or directed, so bedding material can be placed in the bottom of the trench and shaped to provide a continuous firm bearing for the pipe barrel. Bell holes must be provided for proper make-up of the joints.

3. The open excavated trench preceding the pipe laying operation and the unfilled trench with pipe in place must be kept to a minimum length causing the least disturbance. The maximum length of open trench must not exceed 300-feet unless otherwise directed by the Commissioner. Comply with Article 4G, CDOT Specifications, for other trench opening length requirements within the public right-of- way.

4. Excavation In Arterial Streets. Comply with Article 4C, CDOT Specifications, for protection requirements when working within arterial streets.

5. Contractor must saw cut existing pavement prior to excavating. Width of saw cut pavement must be such that any sheeting provided for excavation protection is not in contact with the pavement.

6. Where water is encountered in the excavation, the excavation must be dewatered in accordance with Section 31 23 19 – Dewatering Excavations of these specifications.

7. Wherever the nature of the ground will permit, the bottom of the excavation for monolithic and brick sewers must have the shape and dimensions of their outside invert and for pipe sewers the shape and dimensions of the outside of their lower quarter. If the bottom of the trench cannot be shaped to the required form and maintained until a section of the sewer is safely constructed, then the bottom and sides of the trench must be made to conform as nearly as possible to the external shape and dimensions of the sewer, and the space between the outer surface of the sewer and the bottom and sides of the trench must be filled with suitable material for stabilization of the trench bottom.

B. Rock Excavation (open cut)

1. Whenever rock, stone, masonry or other hard, unyielding material is encountered at or above the required trench bottom elevation, remove it to provide a clearance of no less that 6-inches below and on each side of pipes and associated fittings, valves and other appurtenances. Backfill the over excavated area with granular bedding material.

2. Removal of Rock by blasting or by use of a drop hammer is not permitted under this contract.

3. Excavate rock as near as practicable to the outside shape of the work as shown on the Plans. Solid rock, not loosened from the adjacent solid rock, may extend within the neat outside surfaces of these shapes no more than two (2) inches, provided no single projection exceeds one and one-half (1.5) square feet in area at the neat surfaces of the excavation and provided that on any ten (10) foot section of the excavation the total area of such projection at the neat outside surfaces of the section does not exceed twenty (20) percent of the area of the section.

4. The Contractor is required to remove all loose rock and other material from the excavation and in the event that the excavation is enlarged beyond the outside shape of the sewer or sewer structures as shown on the Plans, the Contractor will not be entitled to any payment for the additional Class SI concrete needed to fill the voids caused by such over-breakage.

5. Where rock is encountered, excavate to eight (8) inches below the bottom of the pipe for bedding placement.

C. Trench Excavation (Short Tunnel Construction)

1. In some instances, trees, fire hydrants, sidewalks, and other obstructions may be encountered, the proximity of which may be a hindrance to open cut excavation. In such cases, the Contractor must excavate by means of short tunnels in order to protect such obstructions against damage. Short tunnel work will be considered incidental to the construction and no additional payment will be allowed.

D. Additional Trench Excavation

1. If the soils encountered at the elevations specified are not suitable, or it is determined necessary to go to an additional width and depth, or required to fill designated areas for work done under Removal and Disposal of Unsuitable Materials, the excavation must be carried to such additional width and/or depth and must fill such

excavated areas with approved backfill material as required or directed by the Commissioner.

E. Unauthorized Excavation

1. Wherever the excavation is carried beyond or below the lines and grades shown on the Drawings all such excavated space must be refilled with select fill materials and in such manner as may be directed in order to insure the stability of all affected structures. Beneath all structures, space excavated without authority must be refilled by the Contractor with approved backfill materials and will be considered incidental to the construction and no additional payment will be allowed.

F. Trenching Across or Over Existing Excavations or Utility Trenches

1. In the event that the trench passes over or through a previous excavation, carefully compact and stabilize the bottom of the new trench or excavation to a density equal to or greater than 95% of the maximum dry density as determined by ASTM D1557. Perform this compaction carefully to avoid damaging the existing utility or structure.

G. Special Excavation

1. Remove unsuitable materials to provide two (2) feet minimum horizontal and vertical clearance around water mains or related structures as applicable, unless otherwise directed by the Commissioner.

H. Excavation in Tunnel

1. The tunnel must be excavated and trimmed to such size and shape as will allow the placing of the full section of the pipe as shown on the Plans after all lining is in place.

2. The Contractor must excavate the tunnel and support the surrounding earth so there is no movement of the earth over or adjacent to the work at any time. The Contractor must excavate the tunnel and support the surrounding earth so at no time there is more than 5 feet, measured horizontally, unsupported by bracing as approved by the Commissioner.

3. The Contractor must use extreme care in excavating and trimming to insure that a full section will be placed without materially deviating from the correct lines and grades of the finished structure.

4. In case, due to bad soil conditions, the Contractor requests that the outside outline of the sewer be changed to a minor extent to accommodate his

method of construction, such a change will be allowed provided the strength of the structure is not impaired. Any such modification will not alter the price per foot specified to be paid for the completed sewer, whether such minor modification results in a minor addition or subtraction from the theoretical quantity for the section herein specified.

5. If permission is given the Contractor to excavate the tunnel for a specified distance without immediately placing the concrete lining, the proposed method of bracing the tunnel and the extra bracing necessary must be submitted for approval.

6. No additional payment or allowance of any nature will be made for timber cants, steel plates or other forms of tunnel lining used for supporting the earth during construction. All such tunnel lining must be left in place.

3.4 PLACEMENT OF PIPE BEDDING

A. Pipe Bedding

1. Pipe laid in trenches must be bedded in accordance with the details shown on the Drawings. Bedding material must consist of compacted; well-graded crushed stone fill material as shown and as specified, or as directed by the Commissioner.

2. Existing underground structures, tunnels, conduits, and pipes crossing the excavation must be bedded with compacted sand. Bedding material must be placed under and around each existing underground structure, tunnel, conduit, or pipe as required to stabilize the excavation.

3. At each joint, enough depth and width must be provided around the pipe so that joints can be properly made up.

B. Bedding Placement – Vaults and Structures

1. Pipe bedding beneath precast bases, cast-in-place bases and other foundations must be 6-Inches in thickness and thoroughly compacted in place to not less than 95% of the maximum dry density as determined by ASTM D1557.

C. Bedding and Backfill for Short Tunnel

1. Pipes placed in short tunnels must be bedded in sand. The annular space between the pipe and undisturbed earth must be completely filled with compacted sand fill material. Pipelines in short tunnels must be supported to permit the placement of backfill.

3.5 BACKFILLING EXCAVATIONS

A. General

1. All excavations must be backfilled to the original surface of the ground or to such other grades shown on the Drawings or as directed by the Commissioner. For areas to be covered by topsoil, backfill must be left 6-inches below the finished grade or as shown on the Drawings, or directed by the Commissioner. All backfilling must be done as soon as possible after water main piping has been installed and inspected, and as soon as mortar for masonry or thrust blocks have sufficiently set, unless directed otherwise by the Commissioner.

2. Crushed stone fill material must be used for trench and structure backfill and other areas as shown, specified, or ordered by the Commissioner.

3. Unsuitable material and material rejected by the Commissioner must immediately be removed from the Site and disposed of by the Contractor according to the Contract Specifications.

4. Construction equipment used to backfill against and over cast-in-place concrete structures must not be permitted to travel over these structures until the designated concrete strength has been obtained, as verified by concrete test cylinders. In special cases where conditions warrant, as determined by the Commissioner, the above restriction may be modified if the concrete has gained sufficient strength, as determined from test cylinders, to satisfy design requirements for the removal of forms and the application of load.

B. Backfill Procedure

1. Crushed stone fill material must be used for backfill where roadways, driveways, sidewalks or other pavements are to be placed on the backfill or where the edge of the trench excavation is 5 feet or less from any county or state highway, any city or village street pavement, and in any trenches crossing pavements or sidewalks from a distance beyond the edge of the pavement or sidewalk equal to the depth of the trench. Crushed stone fill material must be used as backfill in trenches parallel to roadways, driveways or other pavements from the top of the bedding to a depth below the ground surface equal to the distance between the inner face of the trench and the closest

edge of the pavement.

2. Where pavements and appurtenances for streets are to be placed over the trenches, the backfill material must be placed in uniform layers not greater than 6-inches in thickness and compacted in place. Each layer must be compacted to or not less than 95% of the maximum dry density as determined by ASTM D1557.

3. All pipe sewers must be surrounded and covered by trench backfill above the granular embedment as soon as they are laid. The trench backfill must be properly compacted and tamped to a depth of at least one foot above the top of the pipe prior to placing the remainder of backfilling.

4. For sewer pipe construction with FA 6 backfill, water jet the backfill to the depth of approximately two-thirds of the depth of cover over the sewer. The distance between jetting holes must not exceed 10 foot along the length and width of the trench, or as directed by the Commissioner. Water jetting of the trench backfill must proceed as soon as practicably, as determined by the Commissioner. The Contractor, in this manner, must place and compact the trench backfill to the level of the sub-grade.

5. Excavated material can be re-used as backfill only if directed or approved by the Commissioner.

6. Where railroad tracks or pavements for highways are to be placed over trenches, the backfill must be placed in conformance with the standards set forth by the respective agency having jurisdiction over the railroad or highway.

7. Trench backfilling work must be done in such a way so as to prevent damage to any pipe, utility, or structure.

8. On monolithic concrete sewers and structures cast-in-place, trench backfill must not be placed until the concrete has attained a compressive strength of 2,000 psi.

C. Backfill under a Supported Water Main

1. Backfill the open trench under the water main and 10 feet beyond the water main sides with approved material up to a level of 1-foot below the invert of the supported water main. The backfill material must be placed in layers of 12-Inches with each layer mechanically compacted to 95% of the maximum dry density as determined by ASTM D1557.
2. Place pipe bedding material from 1-foot below the water main

invert to the water main centerline and compact to achieve 95% of the maximum dry density as determined by ASTM D1557.

3. Remove the water main pipe support systems, supporting beams, and pipe support straps; and cut-off and remove soldier piles to a level at least four (4) feet below finished grade.

4. The water main pipe must be inspected for leakage and joint integrity and repaired if necessary, prior to backfilling above the water main.

5. After approval by the Commissioner, continue backfilling with approved material. The open trench must be backfilled up to the required sub grade level. The backfill material must be placed in layers of 12-Inches with each layer mechanically compacted to 95% of the maximum dry density as determined by ASTM D1557.

D. Backfilling with Controlled Low Strength Material (CLSM) - Flowable Fill

1. Do not place the mix on frozen ground, in standing water, or during wet weather conditions. Mixing and placing may begin only if the air temperature is 35 °Fahrenheit minimum and rising. At time of placement, the material temperature must be 40 °Fahrenheit minimum. Mixing and placing must stop when the air temperature is 40 °Fahrenheit and falling.

2. Place the mix directly from the chute into the space to be filled. Other placement methods may be approved by the Commissioner if the mix design is appropriate.

3. When backfilling against structures, place the mix in layers to prevent damage by lateral pressures. Side slopes must be stepped or serrated to prevent wedging action of the backfill against the structure. Allow each layer to harden prior to placing the next layer.

4. When backfilling pipe trench, distribute the mix evenly on each side of the pipeline to prevent movement.

5. The mix must not be exposed to freezing temperatures or wet weather conditions during the first twenty (24) hours after placement.

6. The mix may be subjected to loading upon approval by the Commissioner, or when a penetration of 39 mm / blow or less has been obtained with the Dynamic Cone Penetrometer test.

7. Polyethylene encasement material shall be used as a bond breaker between the water main pipe and CLSM flowable fill. Polyethylene must be either 8-mil, low density or 4-mil, cross-laminated, high density polyethylene tubing in accordance with AWWA C105.

3.6 FINISH GRADING

A. Finish grading must be performed in accordance with the completed contour elevations and grades shown and must be made to conform to the existing ground surface. All finished graded surfaces must be left smooth and firm and graded to permit positive drainage.

3.7 TRAFFIC CONTROL

A. The Contractor is responsible for traffic control and the protection of vehicular and pedestrian traffic from the work. For detailed requirements see the Contract Specifications and the Traffic Control drawings.

END OF SECTION 31 23 10

SECTION 31 23 19
DEWATERING EXCAVATIONS

PART 1 - GENERAL

1.1 DESCRIPTION OF WORK

A. This section includes requirements for dewatering excavations when necessary to provide a safe working environment and protect the Work so as to provide a satisfactory installation.

1.2 WORK OF THIS SECTION SPECIFIED ELSEWHERE

Article 1.2 intentionally left blank.

1.3 SUBMITTALS

A. Refer to Book I for submittal requirements and procedures for Shop Drawings, Product Data, Records and Samples.

B. Prior to commencing excavation work at the project site, the Contractor must submit to the Commissioner for review and comment a method for removing water which has entered the excavation either from groundwater sources, surface drainage, or other source such as the dewatering of a new or existing water or sewer main. The submittal must include a description of the source of the water, equipment to be used to dewater the excavation, the arrangement of the equipment, time needed to dewater the excavation, method of disposal, and discharge rate of the equipment expressed in gallons per minute. No excavation is to be started until authorization has been given by the Commissioner to proceed with the excavation work.

C. When applicable for sewer projects, the Contractor is to submit the proposed method for by-pass pumping and fluming of sewage to the Commissioner for review and comment.

PART 2 - PRODUCTS (NOT APPLICABLE) PART 3

- EXECUTION

3.1 PREPARATION

A. Capacity of Facilities

1. Facilities for the removal and disposal of water must be of sufficient capacity to keep the excavation dry under all circumstances.

B. Standby Facilities

1. Adequate standby facilities must be provided to insure that the excavation will be kept dry in the event of power failure or mechanical breakdown.

C. Well Points

1. If well points are used, the Contractor must make provisions for removing and resetting individual well points without taking any part of the dewatering system out of service.

3.2 CONSTRUCTION

A. Dewatering

1. At all times during the excavation period and until completion of the Work and acceptance at final inspection, ample means and equipment must be provided with which to promptly remove and properly dispose of all water entering any excavation including leakage from the existing water main which is to be replaced. All excavations associated with the Work must be kept dry. Water must not be allowed to rise over, or to come in contact with, masonry and concrete until the concrete and mortar has attained a set satisfactory to the Commissioner and, in any event, no sooner than twelve (12) hours after placing the masonry or concrete.

B. Groundwater Levels

1. The Contractor must maintain the groundwater level at least 12-Inches below the bottom of the excavation until the excavation until the Work has been completed and the excavation has been backfilled.

C. Water Management

1. Water pumped or drained from the Work must be disposed of in a suitable manner without damage to adjacent property, other Work under construction, street pavement, and parks. Water must not be discharged onto streets without adequate protection at the point of discharge. No water containing settleable solids may be discharged into sewers.

2. All damages caused by dewatering the Work shall be the responsibility of the Contractor and must be promptly repaired at the Contractor's expense.

3. Limit dewatering flow rates to current operating capacity of City sewers.

D. Pumping, Bailing and Diversion

1. The Contractor must at all times during construction provide and maintain ample means and devices for the temporary diversion of flow in existing sewers and drains and the prompt removal and proper disposal of all water or sewage entering the tunnels, trenches or other parts of the work, and must keep said excavations as dry as practicable until the structures to be built therein is completed. All water pumped or drained from the work and from existing sewers must be disposed of in a suitable manner without damage to adjacent property, or to sewers, pavements, electrical conduits or other work or property. The Contractor must provide all temporary flumes or pipe lines and pumping equipment required for the proper diversion of sewage and removal of drainage from the work.

2. Whenever the Contractor removes an existing bulkhead, he must install a screen suitable for the purpose of preventing construction debris from floating into the completed portions of the sewer system. As work progresses, Contractor must clean the completed portions of the sewer by removing rails, jacks, lumber, sandbags and all other construction equipment, excess material and debris.

3. The Contractor must place and maintain all temporary dams, flumes, bulkheads or other structures necessary to prevent water from adjacent sections of the sewer system from entering the work under this Contract in such a manner as to injure it, and must completely remove all such temporary structures from the completed portion of the work as rapidly as practicable. The Contractor must not place a dam, flume or bulkhead in any sewer without first obtaining the approval of the Commissioner. The Contractor must ascertain the possibility of sewage backing up into basements and causing damage and he will be held responsible for any such damage.

4. The City does not assume responsibility for providing the Contractor with an outlet for any storm water or sewage which must be disposed of during the construction work under this

Contract. Until the acceptance of the work, the Contractor will, if so ordered by the Commissioner, keep the entire work pumped free of water and sewage and before the acceptance of any part of the work. Contractor must clean the entire length of such finished part of the work to the satisfaction of the Commissioner.

5. Water must not be allowed to flow over or stand on the pipe or structure invert in such a manner as to cause scouring of the surface.

6. Route all water pumped from trenches or other excavations to settling basins (five feet by ten feet by two feet deep with three compartments) before entering the City of Chicago sewer system. Discharge from the settling basin must be by gravity to the catch basin.

END OF SECTION 31 23 19

SECTION 33 07 00

INSULATION FOR WATER MAIN PIPE AND APPURTENANCES

PART 1 - GENERAL

1.1 DESCRIPTION OF WORK

A. This section covers the requirements for insulating water mains and their appurtenances installed with less then the recommended depth of cover as specified in SECTION 33 11 13 – Ductile Iron Water Pipe and Fittings, detailed on the Drawings, or as directed by the Commissioner.

1.2 REFERENCES

A. American Society for Testing and Materials (ASTM), latest edition:

1. ASTM C578 - Rigid, Cellular Polystyrene Insulation.
2. ASTM D1621 - Test Method for Compressive Properties.
3. ASTM C272 - Test Method for Water Absorption.

B. Illinois Department of Transportation Standard Specifications for Road and Bridge Construction, (SSRBC), latest edition.

PART 2 - PRODUCTS

A. Rigid insulation must be closed cell extruded polystyrene foam meeting the requirements of ASTM C578, Type VI.

B. Minimum width of the insulation board must be 2 feet, the minimum length must be 4 feet, and the minimum thickness must be 2-Inches.

C. The insulation must have the following properties:

1. Compressive strength of 40 pounds per square inch average, when tested in accordance with ASTM D1621.

2. Maximum water absorption of 0.1% by volume when tested in accordance with ASTM C272.

D. Furnish mastic approved by the insulation manufacturer for use with the insulation provided.

E. Silica based sand backfill around insulation board must be of gradation FA 7 or FA 6 and conform to Section 1003, Fine Aggregates, of the SSRBC, unless directed otherwise by the Commissioner.

PART 3 - EXECUTION

A. Provide insulation where water main pipe has less than 5 feet of cover only when shown on the Drawings or as directed by the Commissioner.

1. Refer to Specification Section 33 11 13, Part 3.12.A, Table D – Minimum Depth of Cover for Water Main, for minimum depth of cover required for each diameter or range of water main size.

B. Excavate the water main trench to the width required for the rigid board insulation.

C. Spread and compact sand beneath and around all sides of the insulation board. Do not damage the insulation board during compaction. Lay the insulation board flat with no breaks or cracks. Stagger joints of the insulation board not less than 1 foot joint to joint.

D. Insulation must consist of two (2) layers of insulation board. Minimum total thickness of insulation must be 4-Inches.

E. Cover all joints with minimum 2-Inch thick insulation board that is minimum 6-Inches wide. Connect all joints together with mastic. The bond strength of all joints must be proved at least equal to the material strength before any backfill is placed.

F. Spread sand over the insulation board and compact it by suitable mechanical means prior to backfilling.

G. Cut and fit insulation board around valve and service boxes.

END OF SECTION 33 07 00

SECTION 33 11 13

DUCTILE IRON WATER PIPE AND FITTINGS

PART 1 - GENERAL

1.1 DESCRIPTION OF WORK

A. This section includes requirements for the installation of ductile iron water pipe and fittings as shown on the drawings and specified here.

1.2 WORK OF THIS SECTION SPECIFIED ELSEWHERE

A. Section 31 23 19 - Dewatering Excavations.
B. Section 31 23 10 - Excavation, Trenching and Backfilling.
C. Section 33 11 15 - Thrust Restraint for Water Main Piping.
D. Section 33 13 00 - Hydrostatic Testing and Disinfecting Water Mains.

1.3 REFERENCES

A. American Society for Testing and Materials (ASTM), latest edition:

1. AWWA C104 - Cement Mortar Lining for Ductile Iron Pipe and Fittings.
2. AWWA C105 - Polyethylene Encasement for Ductile-Iron Pipe Systems.
3. AWWA C110 - Ductile-Iron and Gray-Iron Fittings.
4. AWWA C111 - Rubber-Gasket Joints for Ductile-Iron Pressure pipe and Fittings.
5. AWWA C115 - Flanged Ductile-Iron Pipe with Ductile-Iron or Gray-Iron Threaded Flanges.
6. AWWA C116 - Protective Fusion-Bonded Epoxy Coatings Int. and Ext. Surf. Ductile-Iron/Gray-Iron Fittings.
7. AWWA C150 - Thickness Design of Ductile-Iron Pipe.
8. AWWA C151 - Ductile Iron Pipe, Centrifugally Cast.
9. AWWA C153 - Ductile Iron Compact Fittings for Water Service.
10. ASME/ANSI B16.1 - Flanges and Flanged Fittings.
11. ANSI B16.21 - Metallic Gaskets for Pipe Flanges.
12. ASME B18.2.1 - Square and Hex Bolts and Screws.
13. ASME B18.2.2 - Square and Hex Nuts.
14. ASTM A123 - Zinc (Hot Dip Galvanized) Coatings on Iron and Steel Products.
15. ASTM A153 - Zinc Coating (Hot Dip) on Iron and Steel.
16. ASTM A240 - Chromium and Chromium-Nickel Stainless Steel Plate, Sheet and Strip, for Pressure Vessels and for General Applications.
17. ASTM A307 - Carbon Steel Bolts and Studs.

18. ASTM A536 - Ductile Iron Castings.
19. ASTM A767 - Zinc Coated (galvanized) Steel.
20. ASTM A775 - Epoxy Coated Steel.
21. ASTM A780-93 - Repair of Zinc Coated (Galvanized) Steel.
22. ASTM B308 – Stainless Steel Alloy Standard Structural Shapes, Rolled, or Extruded.
23. ASTM C564 - Rubber Gaskets for Cast Iron Soil Pipe and Fittings.
24. ANSI A21.5/AWWA C105 - Polyethylene Encasement.

1.4 SUBMITTALS

A. Refer to Book I for submittal requirements and procedures for Shop Drawings, Product Data, Records and Samples.

B. The Contractor must give notice in writing to the Commissioner, sufficiently in advance of his intention to purchase or place a special order for any pipe required to be installed under this contract. Fully dimensioned drawings and/or manufacturers' catalog cuts are to be submitted for review.

C. The Contractor must submit to the Commissioner certified copies of all test reports for test conducted on the pipe by the manufacturer when so requested by the Commissioner.

D. The Contractor must provide the Commissioner with a notarized statement that all tests have been made and met as specified.

1.5 QUALITY ASSURANCE

A. Each manufacturer supplying pipe for water mains under this contract must furnish all facilities, personnel, and materials to conduct tests required as applicable to the type of pipe being supplied, when requested by the Commissioner. The cost of all plant tests required as proof of the acceptability of the water main pipe will be considered incidental to the Work and no additional payment will be allowed.

B. **The Work performed on joining all pipe and fittings, must be performed by a plumber licensed in the State of Illinois or the City. This Work must include, but not be limited to, joining all pipe and fittings, installing joint gaskets, assembling all joints, installing continuity wedges, and tightening all gland nuts and bolts, as applicable for the installation.**

1.6 NOTIFICATION AND LIMITATIONS OF WATER MAIN SHUTDOWNS

Whenever an existing water main or a section thereof is to be shut down during the course of construction, every individual consumer

must be notified at least seventy-two (72) hours prior to the shut down. The Contractor must never operate, under any circumstances, an existing valve for a shut down or other purpose without first notifying and obtaining approval from the Commissioner.

A. **The time for a consumer shut down must not exceed eight (8) hours. Absolutely no shut downs will be permitted before 8:00 AM without approval from the Commissioner.**

B. In case of emergency shut downs, the Contractor must notify customers immediately. Notification may be verbal on a door-to-door basis. However, if a consumer cannot be contacted, a written notice must be placed at the property site showing all pertinent information regarding the shut down. The notice must show a telephone number the consumer may call for information or to express any problem that the consumer may have with the shut down.

C. If a consumer cannot withstand a planned shut down due to a dialysis machine being present or other medical reason, the Commissioner must be notified immediately.

D. All valves 16-Inches in diameter and larger must be operated only by personnel of the Department of Water Management. Notify the Commissioner seventy-two (72) hours prior to the need for operation of the valve.

PART 2 - PRODUCTS

2.1 DUCTILE IRON PIPE

A. Ductile iron pipe must conform to the requirements of AWWA C151 and with the additions or substitutions specified in this Section.

B. Pipe bells must be designed to provide a watertight joint without leakage and must be capable of withstanding pressures exceeding those that will rupture pipe of this class and thickness without requiring additional jointing material.

C. Electrical conductivity must be provided at each joint on all push-on and mechanical jointed pipe 16-Inches in diameter and smaller, to facilitate thawing of frozen pipe and building water services. It must also be provided on pipe 24-inches in diameter and larger when building services are directly connected to the water main. Conductivity is to be accomplished by installing serrated silicon wedges as recommended or supplied by the pipe manufacturer. **The use of lead tip gaskets will not be allowed.** Wedges are to be installed in accordance with the requirements of paragraph C in Articles 3.6 and 3.7 of this specification.

D. All pipes must be manufactured so that where a cut is made at any point along the barrel, the cut end will fit properly into a standard mechanical joint bell and be drip tight at hydrostatic test pressure. All pipes shall be "gauged full length".

E. Exterior of pipe must be coated with a petroleum asphaltic material in conformance with AWWA C110, Section 10-10. Interior of pipe must be cement-mortar lined only, in accordance with AWWA C104; an asphaltic seal coat is not allowed, and shall not be used.

F. Pipe thickness and classes must conform to standards shown in Table A.

TABLE A PIPE THICKNESS AND CLASS

Pipe Size	Nominal Wall Thickness	Thickness Class
3-inch	0.34-inch	54
4-inch	0.38-inch	55
6-inch	0.40-inch	55
8-inch	0.45-inch	56
10-inch	0.47-inch	56
12-inch	0.49-inch	56
14-inch	0.48-inch	55
16-inch	0.46-inch	54
18-inch	0.44-inch	53
20-inch	0.45-inch	53
24-inch	0.50-inch	54
30-inch	0.47-inch	52
36-inch	0.53-inch	52
42-inch	0.59-inch	52
48-inch	0.65-inch	52
54-inch	0.73-inch	52
60-inch	0.77-inch	52

2.2 JOINTS

A. **LEAD JOINTS ARE NOT TO BE USED UNDER ANY CIRCUMSTANCES.**

B. Pipe joints must be push-on type joints unless otherwise noted on the drawings, specified here, or directed by the Commissioner. Push-on type joints must conform to AWWA C111.

C. Restrained joints when specified are to meet the following requirements:

1. Mechanical joint pipe with mechanical joint restraint glands. Mechanical joints must conform to AWWA C110. Gaskets must conform to Section 2.4 of this specification.

2. Restrained joint pipe with manufactured weldment, field weldments or manufactured locking rings, locking segments and runner retainers and appurtenances conforming to AWWA C110. Acceptable products are Super-Lock Pipe manufactured by Clow Water Systems Company; FlexRing Pipe or Lok-Ring Pipe manufactured by American Ductile Iron Pipe; or TRFLEX manufactured by United States Pipe and Foundry Company.

D. Mechanical Joint Restraint Glands.

1. Provide restraint glands at all mechanical joints.

2. Restraint glands must be designed for use with the standardized mechanical joint bell pipe conforming to AWWA C110 and AWWA C153. Restraint is to be incorporated into the design of the gland. Acceptable products for this use are Mega Lugs manufactured by EBAA Iron Works; Uniflange manufactured by Ford Meter Box; or Star Grip manufactured by Star Pipe Products.

3. Restraint is to be accomplished by the use of multiple, wedge style restraints. Proper actuation of the wedges is to be ensured with torque limiting twist off nuts.

4. Glands 3-Inches through 16-Inches are to be pressure rated at 350-psi; glands 18-Inch through 48-Inch are to be rated at 250 psi.

5. The gland body and restraint components are to be made from ductile iron conforming to ASTM A536, 65-45-12. Ductile iron wedges are to be heat-treated within a range of 370 to 470 BHN.

6. The joint is to be capable of full deflection during assembly and joint deflection after assembly

7. Provide glands with minimum weights and number of wedges as shown in Table B.

8. Retainer glands are not acceptable.

TABLE B – MINIMUM WEIGHT & NUMBER OF WEDGES PER RESTRAINED JOINT

Pipe Size.	Number of Wedges	Minimum Weight
3-inch	2	6.0-lbs
4-inch	2	7.0-lbs
6-inch	3	11.0-lbs
8-inch	4	14.5-lbs
10-inch	6	23.0-lbs
12-inch	8	28.5-lbs
14-inch	10	46.0-lbs
16-inch	12	52.0-lbs
18-inch	12	63.6-lbs
20-inch	14	71.0-lbs
24-inch	16	90.0-lbs
30-inch	20	190.7-lbs
36-inch	24	226.5-lbs
42-inch	28	400.0-lbs
48-inch	32	488.0-lbs

E. Flanged joints, when shown on the Drawings, specified, or directed by the Commissioner, must conform to the following:

1. Flanged joints must conform to AWWA C115. Flanges must be the long hub type, screwed on the threaded end of the pipe in the shop. There must be no leakage through the pipe threads. The flanges must be designed to prevent corrosion of the threads from the outside.

2. Flanges must be drilled according to the requirements of ANSI/ASME B16.1, Class 125 unless special drilling is called for on the Drawings, specified, or directed by the Commissioner. Bolt holes must be equally spaced, drilled smooth and true. When stud bolts are used flanges must be drilled and tapped to accommodate the studs.

3. The face of the screwed-on flange and plain-end of the pipe must be accurately refaced together, at right angles to the pipe axis. After facing and drilling, the face of the screwed-on flange must immediately be covered with an appropriate rust-preventive coating.

4. Flanged joints must be secured with either bolts and nuts, or stud bolts with a nuts. Bolts, stud bolts, and nuts must meet the

requirements of ASTM A307, Grade B. Bolts and stud bolts must conform to ANSI/ASME B18.2.1. Nuts must conform to ANSI/ASME B18.2.2. All bolts, stud bolts, and nuts must be primed with bitumastic paint after the bolts and nuts have been installed and tightened.

5. Gaskets must conform to Section 2.4 of this specification.

2.3 FITTINGS

A. Fittings to be furnished and installed as specified or shown on the Drawings must be mechanical joint, ductile iron, and full body type in accordance with AWWA C110. Laying length of mechanical joint castings must be as shown in AWWA C110. Wall thickness and allowable variation in the thickness of mechanical joint castings must conform to AWWA C110 and have a 250-psi pressure rating.

B. Compact fittings may not be used unless otherwise approved by the Commissioner.

C. Plain ends of mechanical joint fittings must be beveled and gauged to properly seat in push-on joint bells.

D. The fittings must be smooth and free from defects of every nature that would make them unfit for the use that they were intended. Plugging of fittings is not allowed. Repairing of defects by welding will be allowed if such repairs will not adversely affect the serviceability of the fittings or their ability to meet the strength requirements of the referenced AWWA standards.

E. All castings must be coated with a petroleum asphaltic material in conformance with AWWA C110, Section 10-10. Interior of pipe must be cement-mortar lined only, in accordance with AWWA C104; an asphaltic seal coat is not allowed, and shall not be used.

F. Flanged fittings must conform to AWWA C110, and have a 150-pound per square inch pressure rating.

2.4 GASKETS

A. All gaskets for pipe, fittings and appurtenances must be vulcanized natural or vulcanized synthetic rubber, non-porous, free of foreign materials and visible defects. Recycled rubber may not be used.

B. When soil conditions do not permit the use of natural or synthetic rubber gaskets and when directed by the Commissioner, all gaskets for pipe, fittings and appurtenances must be Nitrile (acrylonitrile butadiene), nonporous, free of foreign materials and visible defects.

C. Gaskets for flanged joints must be of the ring type, 1/16-Inch thick, and meet the requirements of ANSI Standard B16.21. Acceptable manufactures for gaskets type as manufactured by the Crane Company; Garlock Packing Company; or U.S. Rubber Company.

D. Gaskets must be stored in a cool place and protected from light, heat, oil, or grease until installed. Any gasket showing signs of cracking, weathering, abrasion or other deterioration will be rejected.

2.5 POLYETHYLENE ENCASEMENT

A. Polyethylene encasement material must be either 8-mil, low density or 4-mil, cross-laminated, high-density polyethylene tubing in accordance with AWWA C105.

2.6 TRANSITION SLEEVES

A. Transition sleeves for pipe 16-inches in diameter and smaller must be of type as manufactured by Dresser, Style 253 Modular Cast Couplings; Smith Blair, Type 441 Cast Transition Couplings; Ford, Style FC2A Transition Couplings; Power Seal, Model 3501 Transition Couplings; or JCM Industries Model 212 Transition Couplings.

Transition sleeves for pipe diameter greater than 16-inches must be of type as manufactured by Ford, Style FC2A or Style FC5 Transition Couplings; Romac Industries, Style 501 Transition Couplings; Dresser Style 38, Style 62, or Style 138 Transition Couplings; or Power Seal, Model 3501 Transition Couplings; or Smith Blair, Type 441 Cast Transition Couplings.

B. Transition sleeves must be designed to join class "B" pit cast iron pipe to AWWA C111/C151 standard ductile iron pipe. They must provide for pipe misalignment and settlement deflection and make a leak proof non- soldered joint, which allows for limited line movement due to expansion and contraction. Design couplings for a minimum rated working pressure of 150-pounds per square inch.

C. Transition sleeves pipe 16-Inches in diameter and smaller must be constructed of ductile iron conforming to ASTM A536. Transition sleeves for pipe diameters greater than 16-Inches must be constructed of ductile iron conforming to ASTM A536 or carbon steel conforming to ASTM A36. Ends must have a smooth inside taper for uniform gasket seating. The follower flanges must be ductile iron conforming to ASTM A536 or carbon steel conforming to ASTM A36.

D. Transition sleeves must be shop coated inside and outside with fusion bonded epoxy coating conforming to AWWA C-213.

E. Gaskets must be of molded rubber conforming to ASTM C564 for potable water service.

F. Bolts and nuts must be 5/8-Inch in size and must be Grade 304L stainless steel, annealed. Nuts must be Teflon coated to prevent galling during storage.

G. Each transition sleeve must be supplied with four electrical continuity brackets for electrical continuity across the sleeve. The angle bracket must be made from ASTM A240-T304 stainless steel with a stainless steel set screw.

H. Contractor must field measure the existing cast iron water main for exact size of outer dimension and degree of out-of-roundness at the location to install the transition sleeve prior to ordering and installing the transition sleeve for that location.

2.7 PIPE SUPPORT SYSTEMS AND HANGERS (INTENDED FOR PERMANENT INSTALLATIONS)

A. Manufactured pipe support systems, fasteners, and miscellaneous hardware must be fabricated from high strength stainless steel conforming to ASTM B308, or hot-dipped galvanized steel conforming to ASTM 123 and ASTM 153. Pipe support systems must be designed to have a minimum load safety factor of three (3) times the anticipated loading.

B. Field fabricated pipe support systems, fasteners, and miscellaneous hardware must be cold-galvanized by painting metal surfaces with a 2-mil thick coating of ethyl silicate in-organic zinc-rich paint primer per manufacture's directions. Galvanized primer must be completely dry before backfilling the excavation. Field fabricated pipe support systems must be designed to have a minimum load safety factor of three (3) times the anticipated loading.

C. Repair damaged galvanized coated surfaces in accordance with ASTM A780-93. Apply 2-mil thick coating of ethyl silicate in-organic zinc-rich paint primer per manufacturer's directions. Zinc primer must be allowed to completely dry before backfilling the excavation.

D. Cold-galvanizing zinc primer paint must be of the inorganic, ethyl silicate type, containing at least 60% zinc dust and 40% adhesive binders, and conform to ASTM 780-93, type as manufactured by Tnemec Products, Kansas City, MO., Brite Products, Detroit, Mich., or Valspar Coatings, Minneapolis, MN.

PART 3 - EXECUTION

3.1 INSTALLATION

A. All ductile iron pipe, fittings, and appurtenances must be installed in accordance with the manufacturer's recommendations and requirements.

B. All pipe, fittings, and accessories must be delivered, unloaded, strung, and laid as specified here.

C. The water mains must be laid with depths of cover as indicated under Article 3.12 of this specification, unless otherwise shown on the drawings, or directed by the Commissioner. The pipes must be laid true to line and grade.

D. Fittings as specified must be used where shown on the drawings and where grade or alignment changes require offsets greater than those recommended by the pipe manufacturer.

3.2 TRANSPORTATION, DELIVERY AND STORAGE

A. Every precaution must be taken to prevent damage to the pipe during transportation and delivery. Pipe ends, fittings, valves and hydrants must be sealed with caps or by another suitable method upon transportation from the supplier. Caps or end seals must be sturdy, secure, and wind- resistant so as to protect the pipe at all times prior to installation. Pipe ends, fittings, valves, and hydrants discovered without proper end caps or seals, upon delivery or during construction, will not be accepted until the unprotected pipe has been cleaned, swabbed, and or pressure washed by the contractor to the satisfaction of the Commissioner. Extreme care must be taken in loading and unloading the pipe and fittings. Such work must be done slowly with skids or suitable power equipment and the pipe must be under complete control at all times. Under no conditions may the pipe be dropped, bumped, dragged, pushed, or moved in any way that will cause damage to the pipe. When handling the pipe with a crane, a suitable pipe hook or rope sling around the pipe must be used. Under no condition may the sling be allowed to pass through the pipe unless adequate measures are taken to prevent damage to the pipe ends and lining.

B. If in the process of transportation, handling, or installation, any pipe or fitting is damaged, such pipe or fitting must be replaced by the Contractor and be considered incidental to the work and no additional payment will be allowed.

C. The Contractor must store pipe in a manner that will prevent damage. Pipe must be placed on wooden timbers or another suitable support on level ground. The Contractor must prevent the pipe from rolling. The procedures used to prevent rolling must be approved by the Commissioner

3.3 PREPARATION FOR LAYING PIPE

A. Materials, coatings, and linings must be as specified herein, shown on drawings, or directed by the Commissioner. Water mains and services must be installed where shown on the drawings. Installation must be in accordance with standards as recommended by the pipe manufacturer, and as specified herein.

B. Proper and suitable tools and appliances for the safe and convenient cutting, handling, and laying of the pipe and fittings must be used.

C. Before laying, all pipe and fittings must be thoroughly examined for defects and no piece may be installed which is known to be defective. If defects are discovered after pipe or fittings have been installed, the Contractor must remove the defective pipe and/or fitting and replace it with a sound one at his expense and to the satisfaction of the Commissioner.

D. The pipe and fittings must be thoroughly cleaned before they are laid and must be kept clean until they are accepted in the finished work. Care must be exercised to avoid leaving bits of wood, dirt, rock and other foreign particles in the pipe. If any such materials are discovered before the final acceptance of the work, they must be removed and the pipe and fittings replaced, if necessary. All pipes must be kept absolutely clean during construction and must be stopped off with night plugs or caps at the end of each day's work so as to provide a watertight seal. Exposed ends of uncompleted lines and existing water mains and services cut and not abandoned must be capped or otherwise temporarily sealed watertight at all times when pipe laying is not in progress.

E. When cutting ductile iron pipe, it must be neatly cut perpendicular to the longitudinal axis of the pipe without damaging the pipes lining or coating or jointing surface area.

3.4 LAYING WATER MAIN PIPE

A. All pipelines must be laid in trench excavations on bedding or other foundations, as shown on the drawings, specified herein, or ordered by the Commissioner. The pipe must be properly secured against movement and pipe joints must be made in the excavation as required. Pipes must have solid bearing throughout their entire length.

B. At locations where pipe thrust is anticipated to occur, pipe and fittings must be anchored or restrained as shown on the drawings, specified in Section 33 11 15 – Thrust Restraint for Water Main Piping, or as directed by the Commissioner. **Polyethylene encasement is to be installed on all new water main pipe and fittings before pipe is installed and braced against movement**. Care must be taken so as not to damage the polyethylene

encasement during the installation or blocking of the pipe and fittings. If damage occurs, the Contractor must repair or replace the polyethylene encasement at his expense to the satisfaction of the Commissioner.

C. Pipe laying will be permitted only in dry trenches having a stable bottom. Groundwater or water from other sources must be removed as per Section 31 23 19 – Dewatering Excavations. If the trench bottom is unsuitable for the pipes foundation, the kind of stabilization to be utilized will be ordered in writing.

D. If, in the opinion of the Commissioner, the Contractor has failed to obtain an acceptably dry trench bottom using conventional methods of dewatering, the Commissioner may order the Contractor to excavate below the intended grade and to place sufficient sub-grade material as may be suitable over the trench bottom in accordance with Section 31 23 10 – Excavation, Trenching and Backfilling.

E. The Contractor must also take such required precautions to prevent flotation of the new pipeline.

3.5 ASSEMBLY OF FLANGED JOINTS

A. Flanged joints must be made with bolts or bolt studs with nuts as specified in Section 2.2 of this specification.

B. Tighten flange bolts as recommended by the gasket manufacturer to ensure an evenly compressed gasket and leak tight joint.

C. After the bolts and nuts have been properly installed, tightened, and cleaned, prime them with bitumastic paint.

3.6 ASSEMBLY OF MECHANICAL JOINTS

A. Thoroughly brush the surfaces with which the rubber gasket comes in contact with a wire brush just prior to assembly of the joint. Brush lubricant over the gasket and the plain end just prior to installation. In making up mechanical joints, the spigot must be centered in the bell.

B. The gasket and gland must be placed in position, the bolts inserted, and the nuts tightened finger tight. The nuts must be tightened by means of a torque wrench in such a manner that the gland must be brought up evenly into the joint.

C. Joints are to be made up to allow electrical continuity from one pipe to another by installing wedges as specified in Article 2.1, Paragraph C of this specification and are to be installed in the following manner:

1. Use two (2) wedges per joint for 3-Inch to 12-Inch diameter pipes. Wedges must be placed on opposite sides of the joint at an equal distance apart (9 and 3 o'clock positions) around the joint.

2. Use four (4) wedges per joint for 16-inch to 24-inch diameter pipes. Wedges must be installed side by side in pairs placed on opposite sides of the joint at an equal distance apart (9 and 3 o'clock positions) around the joint.

3. Use six (6) wedges per joint for pipes larger than 24-inches in diameter only if building services are directly connected to the main. Wedges must be installed side by side in pairs 120 degrees apart at the 12, 4, and 8 o'clock positions around the joint.

D. The following range of bolt torques must be applied as specified in Table C. If sealing is not obtained at the maximum torque requirements listed in Table C, the joint must be disassembled, thoroughly cleaned, and reassembled.

TABLE C – BOLT TORQUE REQUIREMENTS

Bolt Size	Torque Range
5/8-inch	45-60 ft-lbs
¾-inch	75-90 ft-lbs
1-inch	85-100 ft-lbs
1 1/4inches	105-120 ft-lbs

3.7 ASSEMBLY OF PUSH-ON RUBBER GASKET JOINTS

A. Thoroughly brush the gasket seat in the bell with a wire brush and wipe the gasket and gasket seat with a cloth. Place the gasket in the socket with the large round end entering first so that the groove fits over the bead in the seat. Apply a thin film of NSF 61 approved joint lubricant to the inside surface of the gasket that will come into contact with the entering pipe.

B. Thoroughly brush the plain end of the pipe with a wire brush and placed it in alignment with the bell of the pipe to which it is to be joined. Make up the joint by exerting sufficient force on the entering pipe so that its plain end is moved past the gasket until it makes contact with the base of the socket.

C. Joints are to be made up to provide electrical continuity from one pipe to another by installing wedges as specified in Article 2.1, Paragraph C of this specification and are to be installed in the following manner:

1. Use two (2) wedges per joint for 3-Inch to 12-Inch diameter pipes. Wedges must be placed on opposite sides of the joint at an equal distance apart (9 and 3 o'clock positions) around the joint.

2. Use four (4) wedges per joint for 16-Inch to 24-Inch diameter pipes. Wedges must be installed side by side in pairs placed on opposite sides of the joint at an equal distance apart (9 and 3 o'clock positions) around the joint.

3. Use six (6) wedges per joint for pipes larger than 24-Inches in diameter only if building services are directly connected to the main. Wedges must be installed side by side in pairs 120 degrees apart at the 12, 4, and 8 o'clock positions around the joint.

D. Assemble restrained joint pipe in accordance with manufacturer's instructions.

3.8 TEMPORARY BULKHEADS

A. At ends of constructed sections where adjoining water mains or structures have not been completed and are not ready to be connected, temporary bulkheads must be used.

3.9 SHORT TUNNEL CONSTRUCTION

A. Pipes to be placed in short tunnels must be jointed prior to being pulled into position. Pipe must be pushed or pulled into position in a manner arranged to keep joints tight and to prevent deflection.

3.10 ENCASING DUCTILE IRON PIPE IN POLYETHYLENE

A. All cast and ductile iron pipe and fittings must be encased in polyethylene tubing before being installed, blocked, or braced.

3.11 USE OF DAMAGED, DEFECTIVE, OR NON-SPECIFIED CASTINGS AND FITTINGS

A. All construction castings and pipe fittings that are determined to be damaged, defective or do not meet these specifications and are stored within the Work area must be marked for non-use and removed and replaced with fittings that conform to these Specifications.

3.12 DEPTH OF PIPE COVER

A. Unless otherwise shown on the Plans or directed by the Commissioner, all water mains and services must be installed so a minimum pipe cover is achieved as shown in Table D.

TABLE D – MINIMUM DEPTH OF COVER FOR WATER MAINS

Size of Pipe	Depth of Cover
3/4 to 3-inches	5-ft 6-inches + 3-inches
4-inch	5-ft 6-inches + 3-inches
6-inch	5-ft 6-inches + 3-inches
8-inch	5-ft 3-inches + 3-inches
12-inch	5-ft + 2-inches
16-inch	5-ft + 2-inches
24-inch	4-ft 6-inches + 2-inches
30 to 42-inches	3-ft 6-inches (min) or as detailed on drawings
48-inches & Larger	3-ft (min) or as detailed on drawings

3.13 ABANDONMENT OF EXISTING WATER MAINS

A. All openings on abandoned pipe or conduit are to be sealed with a concrete mortar plug of a minimum of one (1) foot in length within the pipe. Pipe 16-Inches in diameter and larger must be filled with fine graded aggregate or controlled low strength material (CLSM) flowable fill, as appropriate, or directed by the Commissioner. CLSM flowable material must meet standards specified in Section 31 23 10, "Excavation, Trenching and Backfilling", paragraph 2.3, C of these specifications.

3.14 DISINFECTION OF PIPE AND FITTINGS

A. Protect new and existing pipe and fittings from water, debris and foreign materials as specified in Section 31 23 10 – "Excavation, Trenching and Backfilling".

B. All new pipe, fittings, and valves must be disinfected in accordance with Section 33 13 00 – "Hydrostatic Testing and Disinfecting Water Mains", and the requirements of the Bureau of Water Quality which may be contacted at 312.744.8190.

C. Swab all pipe and fittings that will not be pressure tested or chlorinated with a chlorine solution during installation. Extra precautions must be taken to prevent debris or ground water from entering the section of water main to be swabbed. Incorporate untested section of water main into the flushing routine

when the work is necessitated, or part of, a water main replacement project. When connecting pipes to the existing city water system use normal operating pressure to visually inspect for leaks. If feasible, inspect for leaks prior to backfilling the excavation. Comply with all standards and requirements of the Bureau of Water Quality.

3.15 WATER MAIN SUPPORT SYSTEMS

A. Support and anchor all piping in proper position and alignment with due allowance for expansion and contraction.

B. The type, location, and arrangement of hangers and supports must be as shown on the drawings, or as directed by the Commissioner. Pipe supports and hardware must be appropriate to meet installation conditions, anticipated loading, and fabricated from corrosion resistant materials described in paragraph 2.7 - Pipe Support and Hangers, of this specification. All support systems whether pre-manufactured or field fabricated must have a minimum load safety factor of three (3) times the anticipated loading. Corrosion protective coatings damaged during installation of the pipe support system must be repaired per the manufacturer's requirements, or as directed by the Commissioner to maintain corrosion protection.

3.16 SEPARATION BETWEEN WATER AND SEWER MAINS

A. When a water main crosses above a sewer main and the vertical separation is between 18 and 6-Inches, as measured between the bottom of the water main and crown of sewer pipe, the sewer must be constructed of ductile iron pipe (or PVC pipe as directed by the Commissioner) with rubber gasketed joints to a distance one foot beyond the wall of the trench excavation. Flexible transition coupling must be used to join the ductile iron pipe to the sewer pipe and be encased in bentonite as shown on the drawings. This sewer separation work (between 18 and 6-Inches) shall be approved by the Commissioner prior to commencing and completing this work.

B. When a water main crosses below a sewer main, the sewer pipe must be constructed of ductile iron pipe with rubber gasket joints for a perpendicular distance of 10 feet on each side of the center line of the water main, and an 18-Inch vertical separation must be maintained. Flexible transition couplings must be used to join the ductile iron pipe to the sewer pipe.

END OF SECTION 33 11 13

Section 33 11 15

THRUST RESTRAINT FOR WATER MAIN PIPING

PART 1 - GENERAL

1.1 DESCRIPTION OF WORK

A. This section includes the requirements for providing thrust restraint for the installation of water mains and services as shown on the Drawings and specified here.

1.2 WORK OF THIS SECTION SPECIFIED ELSEWHERE

A. Section 33 11 13 – Ductile Iron Water Pipe and Fittings.

1.3 Design Requirements

A. Calculated thrust restraint must be based on the frictional force and bearing resistance between the pipe and the surrounding soil, with an allowance made for the polyethylene wrap on ductile iron pipe installations.

1.4 REFERENCES

A. ANSI B1.1 - Unified Inch Screw Threads.

B. American Society for Testing and Materials (ASTM), latest edition:

1. ASTM A193 – Steel and Stainless Steel Bolting Materials
2. ASTM A194 – Carbon and Alloy Steel Nuts for Bolts for High-Pressure or High-Temperature Service, or Both
3. ASTM A325 - Heat Treated Structural Steel Bolts.
4. ASTM A449 – Quenched and Tempered Steel Bolts and Nuts
5. ASTM A536 - Ductile Iron Castings.
6. ASTM A563 – Carbon and Alloy Steel Nuts
7. ASTM A615 – Standard Specification for Deformed and plain Billet Steel Bars for Concrete Reinforcement.

C. IDOT Standard Specifications for Road and Bridge Construction (SSRBC), latest edition.

PART 2 - PRODUCTS

2.1 DUCTILE IRON PIPE RESTRAINT

A. Mechanical joint thrust restraint glands must be used unless otherwise

directed. Where such glands cannot be used to provide sufficient thrust restraint, concrete thrust blocks must be used, unless directed by the Commissioner.

2.2 CONCRETE THRUST BLOCK RESTRAINT

A. All concrete used in the construction of thrust blocks must be Class SI of the SSRBC.

B. All reinforcing steel used in the construction of thrust blocks must conform to the requirements of ASTM A615.

2.3 TIE ROD PIPE RESTRAINT

A. Where the use of tie rods to restrain thrust is approved by the Commissioner, they must meet the following ASTM Designations:

Tie Rod Diameter	**Rods**	**Nuts**	**Washers**
Up to 1-1/2"	A449	A563 Grade D	A325
Over 1-1/2"	A193	A194 Grade 2H	A325

B. Tie rod threads must be the Unified Coarse Thread Series conforming to ANSI B1.1 for rods 1-inch in diameter and smaller and 8-inch pitch thread series for larger diameters. Nuts must be hexagonal. Harness tie rod nuts must have a standard chamfer on the back face with finished spherical bearing surface. The nuts must seat in steel plate washers having similar finished concave spherical seats. Where the use of mechanical joint retainer glands are called for on the Plans or approved by the Commissioner, they must conform to ASTM A536. All special castings must be made of good quality ductile iron of such character and so adapted in chemical composition to produce spheroidal graphite structure. The iron must be of such character to provide superior mechanical properties of strength and ductility; the iron must be soft enough to satisfactorily allow drilling and cutting.

C. The minimum physical properties will be as follows:

1. Tensile strength- 60,000 pounds per square inch.

2. Yield strength- 42,000 pounds per square inch.

3. 2-Inch Elongation.-10%.

D. In addition to the standard required tests, the following requirements must be met: Keel Block Tests as detailed in ASTM A536-Standard 0.50-Inch diameter tensile test bars must be machined from keel block coupons cast from each heat and of the same hardness range as the special castings. Minimum test requirements are as specified above.

PART 3 - EXECUTION

3.1 GENERAL

A. Install all joint anchorage in accordance with the requirements of Section 33 11 13- Ductile Iron Water Pipe and Fittings. Install all joint anchorage for concrete pipe and fittings in accordance with manufacturer's installation instructions unless directed otherwise by the Commissioner.

3.2 DUCTILE IRON PIPE

A. All fittings and conditions, which result in tangential forces on the piping, must be provided with thrust restraints, unless otherwise specified or approved by the Commissioner.

3.3 CONCRETE PIPE

A. Whenever the harnessing of pipe joints by itself does not provide sufficient thrust restraint, the Contractor must provide additional thrust restraint as required. The Contractor must provide anchorage against thrust for water mains and appurtenances wherever the deflection of the pipeline exceeds six

(6) degrees. The anchorage must be accomplished by placing concrete thrust blocks adjacent to the fittings to be anchored. All anchorage must be designed to withstand working pressure plus surge pressure. The Contractor must submit to the Commissioner complete design calculations and plans for all thrust restraints bearing the seal of a Structural Engineer licensed in the State of Illinois.

END OF SECTION 33 11 15

SECTION 33 12 16

WATER MAIN CONTROL VALVES

PART 1 - GENERAL

1.1 DESCRIPTION OF WORK

A. This section includes requirements for the installation of gate valves, resilient wedge valves, and butterfly valves.

1.2 WORK OF THIS SECTION SPECIFIED ELSEWHERE

A. Section 33 13 00 – Hydrostatic Testing and Disinfecting Water Mains.

1.3 REFERENCES

A. American Society for Testing and Materials (ASTM), latest edition:

1. ASTM A48 - Gray Iron Castings.
2 ASTM A126 - Gray Iron Castings for Valves, Flanges.
3. ASTM A436 - Austenitic Gray Iron Castings.
4. ASTM A439 - Austenitic Ductile Iron Castings.
5. ASTM B584 - Copper Alloy Sand Castings for General Application.

B. AWWA C110 - Ductile Iron and Gray Iron Fittings, latest edition.

C. AWWA C111 - Rubber Gasket Joints for Ductile Iron, latest edition.

D. AWWA C500 - Metal-seated Gate Valves for Water Supply Service, latest edition.

E. AWWA C504 - Rubber Seated Butterfly Valves, latest edition.

F. AWWA C509 - Resilient Seated Gate Valves, latest edition.

G. AWWA C550 - Standard for Protective Epoxy Interior Coatings for Valves and Hydrants, latest edition.

H. Federal Specification FF-B-575C - Bolts; Hex and Square, latest edition.

I. Federal Specification FF-N-836E - Nut; Square, Hex, Cap, latest edition.

1.4 SUBMITTALS

A. Contractor must provide an affidavit stating that all Butterfly Valves, valve operators, and torque overload protectors comply with all applicable provisions shown on the drawings and as specified in this specification.

B. Provide manufacturer's catalog cuts and/or certified drawings of all valves, valve operators, and torque overload protectors to be furnished. The manufacturer's catalog cuts and/or certified drawings shall indicate and provide all necessary information regarding dimensions, materials used, internal and external coatings specified herein, and other pertinent or unique item(s) or valve operation (clockwise to open) in conformance to requirements stated in these specifications.

C. All submittals must be reviewed and approved by the Commissioner prior to installation.

1.5 QUALITY ASSURANCE

A. Each valve must be hydrostatically tested at the manufacturer's shops and proven hydraulically tight at all pressures up to 200-pounds per square inch.

B. For gate valves, the following tests are required:

1. The first test consists of applying a 200-pound per square inch hydrostatic pressure between the discs through an opening in the bonnet casting.

2. The second test consists of applying a 200-pound per square inch hydrostatic pressure against the outside of each disc in the manner prescribed below:

a. The valves must be plugged or capped on both ends. The caps or plugs must be drilled and tapped to accept the pressure test piping.

b. With the pressure test piping in place, open the gates of the valve, the test-piping valve, and remove the plug in the bonnet. Fill the valve with water. When a discharge occurs at the outlet side, close the water supply line and insert the bonnet plug.

c. Close the gates of the valves, open test-piping valve, and apply a 200-pound per square inch hydrostatic pressure on the inlet side.

d. Hold test pressure for one (1) minute. During this time no water should discharge from the outlet end of the test piping. If no leak occurs, release pressure, reverse the test piping, and repeat the test procedures for the other gate. If a leak occurs, repair and / or replace the valve as directed by the Commissioner. Repeat the test procedures.

3. An affidavit must be furnished from the manufacturer to attest to the fact that each of the valves furnished under this Contract were proven hydrostatically tight in accordance with the specified test procedures.

C. Valves that do not meet the requirements of this Section will be rejected and removed by the Contractor, and replaced with valves that conform to this Section, within the time period allowed by the Commissioner. Gate valve removal and replacement will be considered incidental to the installation of the valves and no additional payment will be allowed.

D. **The Work performed for installing valves must be performed by a plumber licensed in the State of Illinois or the City. The Work may include, but not be limited to, setting the valve; cutting and joining all pipe; installing test taps, fittings, adapters, joint gaskets, and continuity wedges; and tightening all gland nuts and bolts, as applicable for the installation.**

PART 2 - PRODUCTS

2.1 GATE VALVES

A. All gate valves are to be Chicago Standard Gate Valves of the size shown on the drawings that are designed, manufactured, tested, and inspected in accordance with AWWA C500, and in accordance with the exceptions noted here. All valves are to be delivered fully assembled.

B. The following characters must be cast in ½-inch letters on the bonnet of each valve:
- Chicago
- Year of Manufacture
- Manufacturer's Name

C. Gate valves must be of mechanical joint type double disk and in the following sizes: 4-Inch, 6-Inch, 8-Inch, 12-Inch, and 16-Inch. Larger size valves must be of a butterfly style.

D. Material used must meet the requirements as to physical and chemical properties, as specified in this Section.

E. Valves found to contain defects such as blowholes, shrinkage or slag holes, cold shuts, or cracks will be rejected.

F. The thickness of metal in castings, whose standard thickness is less than 0.8-Inch, must not be more than 0.08-inch less than the standard thickness. The deficiency in thickness of castings, whose standard thickness is 0.8- inch or more, must not exceed 10% of the standard thickness. The above allowable deficiencies in thickness, however, must not extend over more than one-half of the area of the casting.

G. After being cleaned and tested, every assembled valve and all metallic parts must be coated inside and outside with a fusion bonded two-part epoxy coating in compliance with AWWA C550 standards. The outside must have a topcoat of two-part polyurethane similar in color to "Black" or approved equal.

H. The brass castings must comply with ASTM B584, Copper Alloy UNS No. C83600.

I. The bronze in the valve stem and in the stem nut must be manganese bronze, complying with ASTM B584, Copper Alloy UNS No. C86700. Stem seals are to be double o-rings complying with ASTM D2000 and ASTM 568A

J. The gaskets used between the flanges must be fully faced, 1/32-inch thick and made of heavy-duty, asbestos-free, fiber composition, suitable for water service.

K. Bolts and nuts must be made of cast iron or steel. Heads of seal plate bolts must conform to the dimensions shown on the Drawings (an alternate of hex or square head bolt is acceptable) while all other requirements of seal plate bolts must conform to Federal Specification FF-B-575C and nuts must conform to FF-N-836E. Heads of bolts must be unfinished and nuts must be semi-finished. Both bolts and nuts must be hot dipped galvanized as specified in the applicable Federal Specification.

L. The valves herein specified must be furnished complete with mechanical joint accessories. The mechanical joint accessories must consist of mechanical joint thrust restraint glands, rubber gaskets, and tee head bolts and hex nuts, all conforming to AWWA C110. Dimensions and tolerances for mechanical joints must conform to table 1of AWWA C110.

M. It will be the manufacturer's responsibility to provide the patterns and gauges necessary to perform the work to be done hereunder. The Department will not furnish these items.

N. The Department reserves the right to make at any time such tests as it may deem proper to determine that the materials used are proper for the Work and that the valves are of good mechanical construction. The manufacturer must give the authorized inspectors of the Department free access to all places

where valves are being made. At the Department's request, the manufacturer must furnish properly prepared standard test
specimens of the materials used and must provide facilities for testing them.

O. All valves must open by turning the operating stem clockwise.

P. Operating nuts must be 2 ½-Inches square at the base of the nut.

2.2 RESILIENT SEATED WEDGE GATE VALVES

A. The Contractor must furnish and install resilient-seated gate valves that are designed, manufactured, tested, and inspected in accordance with AWWA C509, with following exceptions, deletions, or additions:

1. Exceptions for Section 4.4.7. Valves are to be supplied with 2 ½-inch square operating stem wrench nuts.

2. Exception for Section 4.4.7.2. All valves must open by turning the operating stem clockwise as viewed from top of the valve.

B. Resilient seated wedge gate valves must be of the mechanical joint type supplied complete with joint thrust restraint glands, vulcanized natural or synthetic rubber gaskets, and tee head bolts and hex nuts, all conforming to AWWA C110. Dimensions and tolerances for mechanical joints must conform to Table 1of AWWA C110.

C. All valves must provide an unobstructed waterway of full size when open. Gates or stems must not extend into the waterway. Valves are to be supplied in sizes between 4 and 12-Inches as noted on the drawings.

1. The bronze in the valve stem and in the stem nut must be manganese bronze, complying with ASTM B584, Copper Alloy UNS No. C86700. Stem seals are to be double o-rings complying with ASTM D2000 and ASTM 568A.

2. After being cleaned and tested, every assembled valve and all metallic parts must be coated inside and outside with a fusion bonded two-part epoxy coating in compliance with AWWA C550 standards. The outside must have a topcoat of two-part polyurethane in manufacturer’s standard “Red” color or approved equal.

2.3 BUTTERFLY VALVES

A. Butterfly valves, as specified here, must be designed, manufactured, tested, and inspected in accordance with AWWA C504, Class 150B and with the requirements of this Section as listed hereafter:

1. Body Type: Short bodied mechanical joint, as specified.

2. Maximum Non-shock Shut-off Pressure: 100psi.

3. All valves must have flow through discs.

4. Each valve furnished must be subjected to the performance, leakage and hydrostatic tests described in Section 5.1 of AWWA C504. Both sides of the valve must be tested.

5. A minimum of two (2) weeks prior to the test dates, the manufacturer must notify the Commissioner in writing when the shop testing of the valve will occur.

6. The manufacturer must submit to the Commissioner records of all tests performed to verify valve components are in conformance with ASTM Standards and records of reports describing the procedures and results of the tests for each model of actuator, including the torque rating of each model of actuator. The manufacturer must submit to the Commissioner all records associated with tests conducted under Section 5.1 of AWWA C504.

7. Shaft seals must be either split V type packing or "O" ring seals. Shaft seals consisting of a stuffing box with pull down packing are not acceptable.

8. The shaft seal area must not be exposed to the environment. Should the valve design utilize an open packing bonnet area, that area must be enclosed with a 304 series type 18-8 stainless steel, minimum 1/4-Inch thick removable shroud. The shroud must be fully sealed and rated for buried service. An access cover must be provided on the shroud with a minimum opening of 6-Inches x 8-Inches.

9. The valve shaft must be 304 or 316 stainless steel.

10. The valve body must be made of cast iron conforming to ASTM A126, Class B or ASTM A48, Class 40 alloy cast iron ASTM A436, Type 1 and 2 or ASTM A439, type D2 with maximum of 0.003% lead. The valve disc must be ductile iron conforming to ASTM A536, and it must have a seating edge of 304 or 316 stainless steel. The seating edge may be installed in the valve body if the rubber seat is applied to

the valve disc. The valve seats for 24-inch and larger butterfly valves must be capable of adjustment or replacement at the installation site without having to excavate the valve.

11. Valve discs must be secured to shafts by means of solid, smooth-sided stainless steel or monel taper pins or dowel pins having a circular cross section. Each taper pin or dowel pin must be extended through the shaft and mechanically secured in place. The use of bolts, setscrews, knurled or fluted dowel pins, flat sided taper pins, expansion pins, roll pins, tension pins, spring pins, or other devices in lieu of the pins specified herein will not be acceptable.
12. The valves and valve operators must be rated for buried service, except electric actuators.

13. Valve operators must conform to AWWA C504 for Class 150B. Manual operators must be Limitorque worm gear, self-locking type designed to hold the valve in any intermediate position without creeping or fluttering. Operators must be equipped with torque overload protection to prevent over travel of the disc in the open and closed position. Spur gear must be furnished with an operator to increase the number of turns and reduce operating torque. A separate limit stop device must also be installed in accordance with "Torque Overload Protection", described below. Operators must provide position indication on the housing of the operator. Valves must open with a clockwise rotation of the nut. The valve and valve operator must be rated for bi-directional flow.

14. Valve operators must be equipped with a Chicago standard style hub nut. The hub nut must be attached to the input shaft of the operator by means of a shear pin. The shear pin must be sized such that it fails when 250 foot-pounds of input torque is applied to the hub nut. Three (3) additional shear pins must be furnished as replacement part for each valve ordered.

15. Corrosion resistant nameplates, as described in Section 6.1 of AWWA C504, must be permanently attached to both the valve and valve operator. There must be two (2) valve nameplates. One must be affixed to the valve body and the other must be affixed to the valve operator in a prominent location. In addition to the normal valve data, the plate must also include the number of turns required to operate the valve and the direction to open (clockwise to open). There must be one (1) operator nameplate affixed to the valve operator. The minimum number of turns to close the valve must be no less than 2 turns per inch (5 turns per centimeter) of valve size in order to minimize water hammer.

16. The manufacturer must provide all nuts, bolts, gaskets, and glands required to make connections.

17. Corrosion Protection and Lubrication: The entire housing must be coated inside and outside with fusion bonded two-part epoxy coating in compliance with AWWA C550 standards. The outside must have a topcoat of two-part polyurethane in manufacturer's standard "Red" color or approved equal.

18. The operating mechanism must be permanently lubricated and sealed to withstand 50-feet of water head.

19. There must be no water-retaining external cavities.

B. Torque Overload Protection

1. Contractor must furnish torque overload protection devices. The device must be installed on top of the Chicago standard hub nut on butterfly valve operators and in conformance to the following requirements.

2. Purpose: The over torque protector must prevent butterfly valve and operator from damage due to excessive operating torque.

3. Operation: The device must transmit applied torque in either direction only up to a preset amount and automatically disengage if greater torque is applied. It must automatically reset if the applied torque is below the preset amount.

4. Description: The device must be of overall rugged and of durable construction suitable for long-term reliable operation and suitable for buried service.

5. The upper end must have an integral 2 ½-Inch square operating nut and the lower end must have a matching socket. The socket must have one (1) 2-Inch square head set screw in each of two (2) adjacent faces.

6. The operating mechanism must employ spring-loaded tapered rollers engaged in matching tapered detents. A ball bearing type design will not be accepted.

7. The manufacturer's identification must be cast in 3/8-inch or larger letters on an upper surface.

8. Service Life: The device must have a minimum life of one-thousand

(1000) trips from rated capacity.

9. Trip Torque Set Point: The device must be factory set to trip at 200 foot-pounds of applied torque.

10. Trip Torque Adjustment: Trip torque must be adjustable from 10% to 100% of rated capacity without dissembling the unit. The adjustment means must be sealed and concealed to prevent tampering.

11. The device must be coated with fusion bonded two-part epoxy coating in compliance with AWWA C550 standards.

2.4 QUARTER TURN AWWA ELECTRIC VALVE ACTUATORS (OPEN-CLOSE SERVICE)

A. When shown on the Plans, specified, or as directed by the Commissioner, the Contractor must furnish electric valve actuators in conformance with the following requirements.

1. The electric valve actuator must include the motor, actuator unit gearing, position limit switches, torque switches, declutch lever, and hand wheel, as self-contained unit. The actuator must meet the latest revision of the applicable AWWA specification. The actuator must be of sufficient capacity to operate the attached butterfly valve in a modulating action against 100-pounds per square inch pressure.

2. The motor must be rated for continuous duty, specifically designed for valve actuator service, and must be of high starting torque, totally enclosed, non-ventilated construction. Motor insulation must be a minimum NEMA Class F, with a maximum continuous temperature rating of 311º Fahrenheit (rise plus ambient) for the duty cycle specified. Provide optional insulation classes where specified or where service conditions warrant.

3. The motor must be of sufficient size to open or close the valve at the maximum torque. The motor must be capable of operating at plus or minus 10% of specified voltage. The motor duty rating must be sufficient for one (1) complete cycle (open-close-open, or reverse) without exceeding its temperature rating. Motor bearings must be of the anti-friction type, and permanently lubricated.

4. The motor must be an independent sub-assembly such that the power gearing must not be an integral part of the motor assembly, to allow for motor or gear changes dictated by system operation changes. The motor must be equipped with internal thermal contact, to protect

against motor overload, and 120-volt heaters. The motor must be designed to operate on 230/460 VAC.

5. The actuator must be a multiple reduction unit with power gearing consisting of spur or helical and worm gearing. There must be a self-locking worm gear set in the drive train to maintain valve position. The spur or helical gearing and worm gear must be of hardened alloy steel, and the worm gear must be alloy bronze. All power gearing must be accurately cut; non-metallic, aluminum, or cast gearing must not be allowed. Anti-friction bearings with caged balls or rollers must be used throughout.

6. All rotating power train components must be immersed in grease with provisions for inspection and re-lubrication without disassembly. Lubricants must be suitable for ambient conditions between 20º F and 150º F. Adequate seals must be provided on all shafting.

7. The actuator must have a built-in device, which allows the motor to reach full speed before engaging the valve load when required by unseating applications.

8. A metallic hand wheel must be provided for manual operation, with an arrow to indicate "open" rotation. The hand wheel must not rotate during motor operation. A fused motor must not prevent manual operation. When in manual operating mode, the actuator must remain in this mode until the motor is energized, at which time the actuator will automatically return to electric operation. Changing from motor operation to manual operation must be accomplished by a positive, padlockable declutching lever, which mechanically disengages the motor and related gearing. It must be impossible for simultaneous manual and motor operation to occur. Friction type declutching mechanisms are not acceptable.

9. Position limit switches and associated gearing must be an integral part of the valve actuator. Limit switch gearing must be of the intermittent type, made of bronze or stainless steel, lubricated, and totally enclosed to prevent dirt and foreign matter from entering the gear train. Limit switch contacts must be heavy duty and silver-plated with wiping action. Where specified, the actuator must have sixteen (16) contacts, four (4) contact/four (4) rotor types, all of the same basic design. As an alternative, a limit switch assembly may be directly coupled to the valve stem, eliminating the need for intermittent gearing, and eight (8) single pole, double throw (SPDT) or eight (8) double pole, double throw, (DPDT) contacts. Contacts must be convertible from normally open, to normally closed, or reverse.

10. Switches must be adjustable, allowing for trip points from fully open to fully closed positions of valve travel. They must not be subject to breakage or slippage due to over-travel.

11. Switch design must permit visible verification of switch position without disassembly.

12. Each valve actuator must be equipped with a switch that will interrupt the control circuit in both the opening and closing directions when valve torque overload occurs. Contacts must be silver-plated. The torque switch must have graduated dials for both open and close directions of travel, and each must be independently adjustable. The torque switch must include a positive means to limit adjustability so as not to exceed the actuator output torque capability. The activating spring back must be of the Belleville spring design.

13. The position limit switch and torque switch contact must be rated 600 volts per NEMA standard ICS 2-125, heavy duty.

14. The control compartment must be provided with a 120-volt space heater.

15. The valve and operator must be aligned in such a manner that when installed, the manual hand wheel is in a horizontal plane.

16. The operating time must be two (2) minutes for 90 º- valve travels.

PART 3 - EXECUTION

3.1 FIELD TESTING

A. All valves will be tested as specified in Section 33 13 00 - Hydrostatic Testing and Disinfecting Water Mains.

3.2 SETTING OF VALVES

A. Valves must be carefully installed in their proper positions, free from all distortion and strain, with mechanical or flanged joints, and must be packed and left in satisfactory operating condition.

3.3 SETTING OF VALVE BOXES

A. Valve boxes must be installed where shown on the drawings, or where ordered by the Commissioner, and must be set vertical and concentric with the valve box. Any valve box which has been moved from its original position by direct or indirect actions of the Contractor, so as to prevent the operation of the valve key extension, must be reset and/or replaced as applicable, by the

Contractor. This work will be considered incidental to the construction and not considered for additional payment. Any valve key extension or stem, which has been damaged so that it is inoperable, must also be replaced, and will also be considered incidental to the construction and no additional payment will be allowed.

3.4 INSPECTION MANHOLES

A. Butterfly valves must be installed so that the side that allows adjustments and replacement of the rubber seat is accessible through the inspection manhole. For valves with seat rings on the disc, the valve must be installed so that when the valve is closed, the seat rings are on the same side as the inspection manhole.

END OF SECTION 33 12 16

SECTION 33 12 19
FIRE HYDRANTS

PART 1 - GENERAL

1.1 DESCRIPTION OF WORK

A. This section includes requirements for supplying materials for and the installation of fire hydrants, as shown on the drawings and specified here.

1.2 REFERENCES

A. American Society for Testing and Materials (ASTM), latest edition:
   1. ASTM A108 - Standard Quality Carbon Steel Bars.
   2. ASTM A126 - Gray Iron Castings for Valves, Flanges, and Pipe Fittings.
   3. ASTM A153 - Hot Dip Zinc Coating for Iron and Steel Hardware.
   4. ASTM A307 - Carbon Steel Bolts and Studs.
   5. ASTM A536 - Ductile Iron Castings.
   6. ASTM B62 - Composition Bronze or Ounce Metal Castings.
   7. ASTM B584 - Copper Alloy Sand Castings.
   8. ASTM B633 - Electrodeposited Zinc Coatings on Iron and Steel.
   9. ASTM C700 - Vitrified Clay Pipe, Extra Strength, Standard Strength, and Perforated.
   10. ASTM D395 - Test Methods for Rubber Property Compression Set.
   11. ASTM D412 - Test Methods for Rubber and Elastomers.
   12. ASTM D2000 - Classification of Rubber Products in Automotive Applications.
   13. ASTM D2240 - Durometer Test for Rubber Hardness.

B. AWWA C502 - Dry Barrel Fire Hydrants, latest edition.

C. Federal Specification FF-B-575C - Bolts; Hexagon and Square, latest edition.

D. Federal Specification RR-C 271D - Chains and Attachments, latest edition.

1.3 SUBMITTALS

A. Provide an affidavit from the manufacturer to attest to the fact that all hydrants furnished under this Contract were tested and proven hydrostatically tight and mechanically sound in accordance with the specified test procedures.

1.4 QUALITY ASSURANCE

A. After each hydrant is completely assembled, it must be mechanically and hydrostatically tested in conformance with AWWA C502, Sec 5.1.

B. **The Work performed for the hydrant installation must be performed by a plumber licensed in the State of Illinois or the City. The Work may include, but not be limited to, setting hydrants; joining all pipe, fittings, and valves; installation of joint gaskets and continuity wedges; and tightening of all gland nuts and bolts, as applicable for the installation.**

PART 2 - PRODUCTS

2.1 GENERAL

A. The hydrants must be of the City of Chicago standard design with mechanical joint bottom. The completed hydrants must be delivered finished, painted, and fully assembled.

2.2 FIRE HYDRANTS

A. The standpipe must include the manufacturer's name, year of manufacturing, and the letters "C.W.W." in letters 1-Inch high. This lettering must be positioned approximately 1 foot below the top flange.

B. Materials from which the various parts of the hydrants are constructed must be of the kind designated on the details. Each kind of material used must meet the requirements as to physical and chemical properties hereafter specified. Test bars required to established quality grade or strength under the ASTM standards must be made and machined by the manufacturer as part of the work.

C. 3/4-Inch x 2-3/4-Inch unfinished hex head machine bolts and 3/4-Inch American Standard regular hot press hex nuts must conform to Federal Specification FF-B-575C, Class B Steel, Class 1 fit or, hex head bolts and hex nuts must conform to ASTM A307 Grade A. All nuts and bolts to be hot dipped galvanized conforming to ASTM A153 or must be coated by the rust proof electrozinc process ASTM B633, Type G.S., or SS Type 18-8SS, ANSI Type 302, 303, or 304.

D. Iron castings must conform to ASTM A126 Class B. The thickness of metal castings, whose standard thickness is less than 0.8-Inch, must not be more than 0.08-Inch less than the standard thickness. The deficiency in thickness of castings, whose standard thickness is 0.8-Inch or more, must not exceed 10% of the standard thickness. The above allowable deficiencies in thickness must not extend over more than one-half of the area of any casting. The diameter of the castings must not vary from the standard dimensions by more than 0.08-Inch.

E. All bronze castings, with the exception of the stem nut, stem screw, and valve

seats must conform to ASTM B62 for Leaded Red Brass Copper Alloy UNS No. C83600. The valve seat must conform to ASTM B584 for Leaded Manganese Bronze, Copper Alloy UNS No. C86700. The stem nut and stem screw must conform to ASTM B584 for Silicon Brass, Copper Alloy UNS No. C87600 with the following mechanical properties:

1. Minimum Tensile Strength - 45,000-psi

2. Minimum Yield Strength - 25,000 psi

3. Minimum Elongation - 16% of length

4. Brinell Hardness - 110

F. The stem nut and stem screw must be stamped SI for identification purposes.

G. Wrench nuts made of ductile iron must be marked "D.I." on the flange portion opposite the arrow indicating the direction of turn to open.

H. Ductile iron castings must comply with compositions and physical properties in accordance with ASTM A536 Grade 65-45-12.

I. The City will furnish neoprene-seating valves if requested by the Contractor. The Contractor's charges for transporting the neoprene seating valves must be considered incidental to the construction and no additional payment will be allowed.

J. Full face gasket of suitable material, 1/16-inch thick, 8 ½-inches X 13 ½-inches, with eight (8) 7/8-inch diameter holes on an 11 3/4-inch bolt circle must be provided for the hydrant flange gaskets.

K. Steel hydrant chain must comply with Federal Specification RR-C-271D (1), Type II, Class 2, with an approximate weight of 25-pounds per 100 feet, and have a hot galvanized coating. This chain, approximately 26-Inches long, must be connected to hydrant cap hooks and fastened at its center to the hydrant by means of the ½-Inch X 1-Inch cap screw with chain angle and "S" hook of ½-Inch mild steel stock "S" hook and cap hooks which engage the chain, must be securely welded in the closed position or fastened in a suitable manner to hold the hooks securely in a closed position.

L. Where the Plans call for finish and drilling, all such work must accurately comply with the dimensions shown, so that all parts are interchangeable from one hydrant to another. It will be the manufacturer's responsibility to provide the patterns and gauges necessary to perform the work specified.

M. Where machining tolerances are not indicated on the drawings, the following must be used where applicable:

1. If dimension is in decimals, tolerance is ± 0.005-Inch.

2. If dimension is in inches, tolerance is ± 1/64-Inch.

N. Appropriate lubricant must be applied to threads on hydrant bottom, ½-Inch X 1-Inch cap screw and valve seat before assembly.

O. Operating stem must be of cold rolled steel, ASTM A108 Grade 1018. Stem must be coated, excluding bottom 3-7/8-Inch of the section below shoulder including threads, with a bituminous coating.

P. Rubber Gaskets must comply with ASTM D2000; Type SC-715B, as follows:

1. Shore A Durometer Hardness - 70 ± 5 ASTM D2240.

2. Tensile Strength - 1500-psi minimum ASTM D412.

3. Compression Set - 35% maximum ASTM D395.

Q. The City reserves the right to make at any time such tests as it may deem proper to determine that the materials used are proper for the work and that the hydrants are of good mechanical construction. The Contractor must give the authorized inspectors of the City free access to all places where hydrants are being made. At the City's request the manufacturer must furnish properly prepared standard test specimens of the materials used and must provide facilities for testing them.

R. Fire Hydrants that do not meet the requirements of this Specification will be rejected and, when so ordered by the City, the Contractor must remove all inferior hydrants not meeting the Specification and replace rejected items within the time limits as specified. The removal and replacement of the hydrants will be considered incidental to the construction and no additional payment will be allowed.

2.3 PAINT

A. All ferrous metal parts of the hydrant, inside and outside, must be thoroughly cleaned before coating. Coatings used on interior surfaces of the hydrant that are in contact with potable water must be suitable for contact with drinking water. Prepare hydrant surfaces and apply paint in accordance with paint manufacturer’s recommendations. Do not paint exposed hydrant nozzle threads or other useable threads.

B. Primer must be red oxide primer; a product must match color of W. C. Richards Metal primer #WRFA-13-127; or Benjamin Moore Universal Metal Primer # M07.

C. Top coat must be alkyd high-gloss enamel; a product must match color of Benjamin Moore Impervo #C13320 (Brilliant Red), or Sherwin Williams Industrial Enamel Safety Red #617-4064.

D. Paint for color coding flange must be as follows:

1. White colored pigment; a product must match color of Seymour Stripe #16- 652 Spray (White), Rustoleum High Performance Acrylic 5200 System (#5292 Gloss White), or Sherwin Williams PM 200 AES Pure White #5178-99993.

2. Yellow colored pigment; a product must match color of Benjamin Moore Impervo #C133 Alkyd High-Gloss Metal and Wood Enamel (Safety Yellow), or Sherwin Williams Industrial Enamel Safety Yellow #617- 4072, #617-8000, or #617-50320.

3. Blue colored pigment: a product must match color of Seymour Stripe #16-653 Spray (Precaution Blue), or Rustoleum High Performance Acrylic 5200 System (#5225 Safety Blue).

E. Shop Coating of Fire Hydrants.

1. Exterior ferrous surfaces of the hydrant must be painted with a coat of primer to two feet below the top flange.

2. Exterior ferrous surfaces of the hydrant must be given a topcoat of alkyd high-gloss enamel to two feet below the top flange.

3. All exterior ferrous surfaces below the ground line not coated with primer and topcoat must be shop coated with two (2) coats of asphaltic coating, each a minimum of 1 mil thick. The first coat must be allowed to dry thoroughly before applying the second coat.

2.4 HYDRANT DRAIN

A. Hydrant drains must be constructed of 6-Inch diameter, extra strength, perforated clay pipe, conforming to ASTM C700, with mortared bell and spigot type joints.

PART 3 - EXECUTION

3.1 GENERAL

A. Install fire hydrants and hydrant drain with drainage bedding, and connect to hydrant drain outlet as detailed on the drawings.

B. Securely connect fire hydrant to the water main using mechanical joint thrust restraint glands or other restrained joint fittings as shown on the drawings.

C. Pressure test the fire hydrant installation with full line pressure to the fire hydrant without blocking behind the fire hydrant.

D. Hydrant leads must be 8-Inches in diameter, or as otherwise specified or shown on the Plans.

E. Spool pieces are not allowed for the vertical adjustment of hydrants. If a vertical adjustment is required due to the depth of the water main, an offset must be utilized prior to installing the hydrant.

3.2 COLOR CODING HYDRANT FLANGES

A. Contractor must color code the vertical edge of the hydrants top flange, (located approximately 6-Inches from the centerline of the nozzle cap), on all installed hydrants in accordance with the Department's "Color Code for Fire Hydrants".

END OF SECTION 33 12 19

SECTION 33 12 20

WATER MAIN VALVE BASINS & METER VAULTS

PART 1 – GENERAL

1.1 DESCRIPTION OF WORK

A. This Section includes requirements for construction and/or adjustment of water main valve basins and meter vaults using precast concrete or masonry structures.

1.2 WORK OF THIS SECTION SPECIFIED ELSEWHERE

A. Section 31 23 10 – Excavation, Trenching and Backfilling.
B. Section 03 20 00 – Concrete Reinforcing.
C. Section 03 30 00 – Cast-In-Place Concrete.

1.3 REFERENCES

A. American Society for Testing and Materials (ASTM), latest edition:

1. ASTM A48 - Standard Specification for Gray Iron Castings.
2. ASTM A185 - Standard Specification for Steel Welded Wire Reinforcement, Plain, for Concrete Reinforcement.
3. ASTM A197 - Standard Specification for Cupola Malleable Iron.
4. ASTM A536 - Standard Specification for Ductile Iron Castings.
5. ASTM A615 - Standard Specification for Deformed and Plain Billet-Steel Bars for Concrete Reinforcement.
6. ASTM C32 - Standard Specification for Sewer and Manhole Brick.
7. ASTM C55 - Standard Specification for Concrete Building Brick.
8. ASTM C139 - Standard Specification for Concrete Masonry Units for Construction of Catch Basins and Manholes
9. ASTM C443 - Standard Specification for Joints for Concrete Pipe and Manholes Using Rubber Gaskets
10. ASTM C478 - Standard Specification for Precast Reinforced Concrete Manhole Sections
11. ASTM C857 - Standard Practice for Minimum Structural Design Loading for Underground Precast Concrete Utility Structures
12. ASTM C858 - Standard Specification for Underground Precast Concrete Utility Structures.
13. ASTM C990 - Standard Specification for Joints for Concrete Pipe, Manholes and Precast Box Sections Using Preformed Flexible Joint Sealants.

B. IDOT Standard Specification for Road and Bridge Construction (SSRBC), latest edition.

C. American Association of State Highway Transportation Officials, Standard Specifications for Highway (AASHTO), latest edition.

1.4 SUBMITTALS

A. Refer to Book I for submittal requirements and procedures for Shop Drawings, Product Data, Records and Samples.

B. Shop Drawings: When not indicated on the Contract Drawings in sufficient detail or definition, submit detailed drawings of cast-in-place and precast concrete utility structures and related metal work.

C. Product Data: Submit manufacturers' product data for standard manufactured precast concrete sections and structures, for metal gratings and covers, and for other, related miscellaneous metal items.

D. Certification: Submit certification or other acceptable evidence that covers and grates to be provided for roadways and parking areas meet proof-testing requirements for AASHTO H-20 traffic loading.

PART 2 - PRODUCTS

2.1 PRECAST CONCRETE STRUCTURES

A. Fabrication standards - Circular precast concrete base and riser sections furnished for manholes, valve basins and other structures must conform to ASTM C478. Non-circular precast concrete monolithic and sectional structures for meter vaults, riser manholes and other structures must conform to ASTM C858.

B. Furnish riser sections in various heights, including an offset tapered section, as detailed on the Drawings, or as directed by the Commissioner.

C. Precast reinforced concrete flat slab tops for manholes must conform to ASTM C857, and be designed to accommodate a minimum AASHTO loading of H-20, unless directed otherwise by the Commissioner.

2.2 JOINT SEALANTS

A. Rubber gaskets must conform to ASTM C443.

B. Preformed butyl rubber flexible rope type gaskets must conform to ASTM C990.

2.3 ADJUSTING RINGS

A. Adjusting rings are to be precast concrete in conformance with ASTM C478.

B. Mating Faces:

1. Smooth

2. Parallel

3. Free from cracks, chips, spalls or casting irregularities interfering with watertight mating to structure top or casting.

4. Provide grooves in faces to contain extrudible preformed gasket material when possible.

2.4 CASTINGS

A. Iron castings are to be ductile iron castings conforming to ASTM A536, Grade 60-40-18, or gray iron conforming to ASTM A48, free from blowholes, shrinkage, cracks and other defects.

B. Allowance for shrinkage must be made in the patterns to meet the specified thickness. Frames and lids are to seat at all points.

C. Malleable castings are to conform to ASTM A197.

D. All castings are to be made accurately to dimensions shown on the plans, and planed, filed, or ground where otherwise necessary to secure flat and true surfaces.

2.5 STEPS

A. Steps are to be polypropylene plastic encased Grade 60 steel reinforcement conforming to ASTM C478.

2.6 CAST-IN-PLACE CONCRETE

A. Concrete in accordance with Section 03 30 00 – Cast-In-Place Concrete.

B. Concrete reinforcing in accordance with Section 03 20 00 – Concrete Reinforcing.

2.7 CONCRETE AND MASONRY BLOCKS AND BRICKS

A. Precast concrete brick must conform to ASTM C55 quality designated Grade N-1.

B. Clay brick must be best quality sewer brick conforming to the qualifications of ASTM C32, except where modified here.

1. Brick must be uniform, sound, hard burned, of compact texture, free from lime and cracks with a clear ringing sound when struck, whole and with edges full and square, and of standard dimensions.

2. Brick, when thoroughly dried and immersed in water for twenty-four (24) hours, must not absorb more than 15% by weight of water.

3. If in any load of brick more than 10% are inferior, the whole load is rejected.

4. If in any load of brick less than 10% are inferior, the brick is accepted provided the Contractor pulls out all inferior bricks, and immediately removes them from the Site of the Work.

2.8 MORTAR

A. Mortar for brickwork is to be composed of one (1) part Portland cement and two (2) parts screened sand.

1. Portland cement must conform to the requirements of Section 1001 of the SSRBC.

2. Sand must be class A quality and gradation FA-9 as specified in Article 1003.02 of the SSRBC.

B. The cement and sand must be proportioned by volume and thoroughly mixed in a tight box.

C. After the initial mixing, water is to be added gradually and the ingredients mixed until the mortar is of proper consistency. The amount of water must be no more than necessary to produce a workable, plastic mortar.

D. Prepare only a sufficient amount of mortar for immediate use and any mortar that has begun to set must not be retempered or used in any way in the Work

2.9 REINFORCING STEEL

A. Reinforcing steel in accordance with Section 03 30 00 – Cast-In-Place Concrete.

PART 3 - EXECUTION

3.1 GENERAL

A. Excavate, backfill and compact in accordance with Section 31 23 10 - Excavation, Trenching and Backfilling.

B. All brick must be thoroughly wetted immediately before being laid.

C. Old brickwork must be thoroughly cleaned and wetted before new work is jointed thereto.

D. No masonry work is to be done when the temperature is below 33º Fahrenheit unless otherwise approved, and then only under conditions for protecting it from frost.

3.2 PRE-CAST STRUCTURE INSTALLATION

A. Carefully place precast sections for all structures on prepared bedding so as to fully and uniformly support the structure and allow pipes to be laid to proper grade.

B. All lift holes on precast sections must be completely filled with mortar, smoothed on both inside and outside surfaces.

C. Seal joints between riser sections with approved mastic sealant or rubber gaskets, or as directed by the Commissioner.

D. Place one adjusting ring (only) on manhole top. Select thickness of adjusting ring to bring completed structure to required elevation.

E. Seal joints between adjusting rings and frames with approved mastic sealant before backfilling structures.

F. Install manhole frame and cover.

3.3 MASONRY STRUCTURE INSTALLATION

A. Install precast concrete or cast in place concrete base as shown on the Drawings.

B. Lay brick courses to the line, straight and parallel, breaking joints with those in adjacent courses.

C. Lay brick radially as headers in a full bed of mortar with joints not exceeding 3/8-Inch in thickness.

D. Fill joints with mortar. Interior joints must be trowel-struck.

E. Fresh masonry must be plastered inside and outside and must be protected from damage of all kinds.

F. New work, unless immediately covered with earth or brick backing, or an approved form of curing compound, must be kept moist until the mortar has hardened.

G. Install manhole frame and cover.

3.4 FINAL ADJUSTMENT OF STRUCTURES

A. After the base course and binder course have been placed, and prior to placing the surface course, the structures must be adjusted to match the final pavement elevation.

B. Remove the binder and base course adjacent to and for a distance not exceeding 12-Inches outside the base of the castings.

C. Adjust the castings to final pavement elevation with adjusting rings set in mortar.

D. Fill the space around the casting with Class SI concrete to the elevation of the surface of the binder course.

3.5 ABANDONMENT OF VALVE BASINS AND OTHER STRUCTURES.

A. Valve basins and other structures being abandoned, the Contractor must remove the existing frame and lid and return it the City as requested by the Commissioner. The remaining parts of the structure are to be removed to a depth of 36-Inches below grade and filled with fine graded aggregate or controlled low strength material (CLSM) flowable fill, as appropriate, or directed by the Commissioner. CLSM flowable material must meet standards specified in Section 31 23 10, “Excavation, Trenching and Backfilling”, paragraph 2.3, C of these specifications.

END OF SECTION 33 12 20

SECTION 33 13 00

HYDROSTATIC TESTING AND DISINFECTING WATER MAINS

PART 1 - GENERAL

1.1 DESCRIPTION OF WORK

A. This section includes requirements for hydrostatic testing and disinfecting water mains as shown on the drawings and specified here.

1.2 WORK OF THIS SECTION SPECIFIED ELSEWHERE

A. Section 33 11 13 – Ductile Iron Water Pipe and Fittings.
B. Section 33 12 16 – Water Main Control Valves.

1.3 REFERENCES

A. AWWA C600 - Installation of Ductile-Iron Water Mains and Their Appurtenances, latest edition.
B. AWWA C651 - Disinfecting Water Mains, latest edition.
C. AWWA C509 - Resilient Seated Gate Valves for Water Supply Service, latest edition.

1.4 SUBMITTALS

A. Prior to starting work, furnish the Commissioner a detailed outline of the proposed sequence of operation. Include the manner of filling and flushing the water main, the method of disposing of the water flushed from the main, the hydrostatic testing procedure, the disinfecting procedure, relevant safety procedures and other relevant procedures to be used. Include the name of the Contractor that will be disinfecting the water main.

B. All submittals will be subject to review by the Water Quality Surveillance Section (WQSS) of the Department.

1.5 QUALITY ASSURANCE

A. Hydrostatic testing of water mains must be performed in accordance with AWWA C600 and the requirements specified herein. The disinfection of water mains must be performed in accordance with IEPA Regulations, AWWA C651, and the requirements specified herein.

PART 2 - PRODUCTS (Not Used)

PART 3 - EXECUTION

3.1 PRESSURE TESTING AND FLUSHING WATER MAINS

A. All flushing and pressure testing of water mains must meet the requirements of AWWA Specification C600.

3.2 TEST SECTIONS

A. New water pipe must be tested in sections isolated from the existing city water system. All existing valves must be tested to determine if they are water tight when in the closed position. If valves are not found to be water tight, they must be repaired or replaced before proceeding with the testing and chlorination procedure.

3.3 INITIAL FILLING

A. Each valved section of pipeline must be slowly filled with water. The test sections may be filled through the isolation valves via the test taps if they are available. Before applying the specified test pressure, all air must be expelled completely from the pipeline section to be tested. When venting air from the pipeline, it is important to limit the pipeline fill rate to avoid excessive surge pressures when the water reaches the air venting opening(s). When the pipeline has been filled, do not permit water to backflow into existing water mains.

3.4 PRELIMINARY FLUSHING

A. All new water mains, extensions, connections, and hydrant branches must be flushed prior to the hydrostatic testing so that water flows clear from all hydrants and test taps. The flushing operation must continue uninterrupted until the water flows clear. Flushing operations may be extended longer when directed by the Commissioner.

3.5 HYDROSTATIC TESTING

A. Setup

Water-pressure testing is the only method allowed for performing hydrostatic tests. Compressed-air testing methods are not permitted. Ensure that all air has been expelled after the preliminary flushing. Use a suitable pump connected to the existing water main system to apply the test pressure. Allow the pipeline to stabilize at the test pressure before conducting the hydrostatic test.

B. Testing

The test must subject the water main to a minimum hydrostatic pressure of 100 psi for a minimum period of two (2) hours. The minimum hydrostatic pressure is to be maintained at the highest point of the pipe in the test section. The test pressure may not vary by more than ±5 psi for the duration of the test. Test pressure is to be maintained within this tolerance by adding makeup water into the pipeline through the pressure test pump. The amount of makeup water added must be accurately measured in gallons (accurate to two decimal places) by suitable methods.

C. Allowable Makeup Water

The amount of makeup water added during the test must not exceed the amount calculated using the following equations:

$$L = \frac{S \cdot D \cdot T \cdot \sqrt{P}}{148000} \qquad \text{Equation 1}$$

L = allowable makeup water, gallons
S = length of pipe tested, feet
D = nominal diameter of pipe tested, inches
T = duration of the test, hours
P = average test pressure, pounds per square inch (gauge)

When testing against closed metal-seated valves, additional makeup water is allowed per valve, as follows:

$$L_V = D \cdot T \cdot .0078 \qquad \text{Equation 2}$$

L_V = allowable makeup water per metal-seated valve, gallons
D = nominal diameter of valve, inches
T = duration of the test, hours

For a 1,000' section of pipe tested for 2 hours at 100 psi against one closed metal-seated valve, the allowable makeup water is equal to:

Table 1
Allowable Makeup Water per 1,000 feet of Pipe, gallons
Tested at 100 psi for 2 hours

Nominal Pipe Diameter									
8"	12"	16"	24"	30"	36"	42"	48"	54"	60"
1.21	1.81	2.41	3.62	4.52	5.43	6.33	7.24	8.14	9.04

D. Visual Examination

Any and all exposed pipe, fittings, valves, hydrants, and joints must be examined carefully during the pressure test. Any damaged or defective pipe, fittings, valves, hydrants, or joints that are discovered during or following the pressure test must be repaired or replaced with reliable material. All visible leaks are to be repaired regardless of the allowance used for testing.

E. Acceptance

Hydrostatic testing is to be repeated until all visible leaks are repaired and the amount of makeup water used is below the allowable amount. After all visible leaks have been repaired, acceptance will be determined on the basis of allowable makeup water only. If any test of a new pipeline discloses a small amount of makeup water greater than that specified above, repairs or replacements are to be accomplished in accordance with the contract documents or directed by the Commissioner.

3.6 SECONDARY FLUSHING

A. After each test section has satisfactorily passed the hydrostatic pressure test, a secondary flushing must be performed. The secondary flushing must be performed before the pipeline is disinfected. The Contractor must give a minimum forty-eight (48) hour notice to the Commissioner before performing the secondary flushing procedure.

B. For water mains the test section must be flushed at a minimum velocity of 2.5 feet per second until the water flows clear. Flushing operations may be extended longer when directed by the Commissioner.

3.7 DISINFECTING WATER MAINS

A. After the secondary flushing has been completed and the water flows clear from the pipeline being tested, the water main must be disinfected. The disinfection procedure must be performed by a Contractor qualified to conduct such work. The Water Quality Surveillance Section (WQSS) of the Department of Water Management will observe the disinfection procedure.

3.8 FINAL FLUSHING

After completion of the chlorination process, the chlorination water must be thoroughly flushed from all pipelines. The water main must be flushed until the water flows clear and has representative distribution system chlorine residual as determined by the WQSS of the Department of Water Management.

3.9 SAMPLING

When the WQSS of the Department of Water Management has determined that the pipeline is ready to be sampled, the samples are to be collected under the direction of the WQSS. The samples are tested for bacterial content before the pipeline can be approved for service.

3.10 APPROVAL

Final approval of the water main rests with the WQSS.

3.11 DISPOSAL OF FLUSHING WATER

For all types of flushing, limit flow rates to existing City sewers requirements.

3.12 SAFETY

The Contractor must have sufficient equipment to properly carry out the hydrostatic testing and disinfecting operations and have the necessary safety equipment on hand; including a Chlorine Institute Emergency Kit "A" and self contained breathing apparatus. Failure to provide such equipment will be cause for not allowing the disinfection operation to be performed.

3.13 CONTRACTOR RESPONSIBILITY

The Contractor must have overall responsibility for hydrostatic testing, disinfecting, and sampling. The Contractor must provide all the necessary personnel to: assist in the disinfection operation; perform the final flushing operation; and assist the WQSS in the water sampling. The Contractor must be responsible for guaranteeing that sufficient and necessary sanitary precautions are taken during construction to ensure approval of the main for service.

3.14 DISINFECTION PROCEDURES WHEN CUTTING INTO OR REPAIRING EXISTING MAINS

Swab pipe and fittings that will not be pressure tested or chlorinated with chlorine solution during installation and use extra precaution to prevent soil and debris from entering the pipe. Incorporate untested pipe into the flushing routine when possible. When connecting new pipe to the existing water system, use operating pressure to visually inspect for leaks. When feasible, perform inspection prior to backfilling. Comply with all standards and requirements of the WQSS.

END OF SECTION 33 13 00

SECTION 05 10 00

STRUCTURAL AND MISCELLANEOUS STEEL

PART 1 - GENERAL

1.1 DESCRIPTION OF WORK

A. This Section includes requirements for structural and miscellaneous steel, including all ferrous metals, whether wrought, rolled, fabricated or assembled, except construction castings (frames, grates, solid lids, & steps), pipe (ductile or steel) and steel plates. The classification includes steel angles and bracing, steel sheet piling, inserts, pins, bolts, nuts, washers, and similar items used for constructing temporary or permanent supports for excavations or work specified in other sections of this specification. This Special Provision is not applicable for other elements within the Project Limits, other than what is shown on the Water Main Drawings, or as required for the installation of the Water Main pipe and/or appurtenances.

1.2 REFERENCES

A. American Society for Testing and Materials (ASTM) and American Institute of Steel Construction, Inc. (AISC), latest edition:

1. AISC Steel Construction Manual.
2. ASTM A36 – Carbon Structural Steel.
3. ASTM A195 – Alloy-Steel and Stainless Steel Bolting Materials.
4. ASTM A194 – Carbon and Alloy Steel Nuts for Bolts
5. ASTM A276 – Stainless Steel Bars and Shapes.
6. ASTM A307 – Carbon Steel Bolts and Studs.
7. ASTM A325 – Structural Bolts
8. ASTM A328 – Steel Sheet Piling.
9. ASTM A500 – Cold Formed Welded and Seamless Carbon Steel Structural Tubing in Rounds and Shapes.
10. ASTM A529 – High-Strength Carbon-Manganese Steel of Structural Quality
11. ASTM A572 – High Strength Low Alloy Columbium-Vanadium Structural Steel.
12. ASTM A992 – Structural Steel Shapes

1.3 SUBMITTALS

A. Refer to Book I for submittal requirements and procedures for Shop Drawings, Product Data, Records and Samples.

B. Complete data on date of manufacture, date(s) of initial installation and extraction, and service for used sheet piling, must be furnished to the Commissioner for all sheet piling used in the Work.

PART 2 - PRODUCTS

2.1 STRUCTURAL AND MISCELLANEOUS STEEL

A. Structural and miscellaneous steel must meet the requirements of the following standards, except as specified otherwise:

1. Structural Steel Shapes and Plate - ASTM A36

2. Bolting material for flanges and fittings – ASTM A193

3. Nuts – ASTM A194

4. Stainless Steel Anchor - ASTM A193 Bolts Type 304, ASTM A194 Nuts, ASTM A276 Bars and Shapes

5. Standard Bolts - ASTM A307

6. High Strength Bolts – ASTM A325

7. Steel Sheet Piling - ASTM A328, A572 Grades 45, 50 and 55

8. Structural Tubing and Shapes – ASTM A500, Rectangular Grade B

9. W Shapes – ASTM A992

2.2 BOLTS AND NUTS

A. Bolts and nuts must be of the best quality mild steel, except where bronze, aluminum, stainless steel, or other materials are shown or required.

B. Bolts must have hexagonal nuts.

C. Threads must be clean cut of American Standard size.

2.3 SHEET STEEL PILING

A. All piling must be new or good quality used material approved by the Commissioner.

B. All sheet piling must be true and straight with undamaged interlocks or ends.

C. Used sheet piling must have been driven only one (1) time before being offered for use on this project.

D. Used sheet piling must be made available for inspection by the Commissioner before it is shipped to the job Site.

2.4 ANCHORS

A. Anchors must be designed for rigid fastening to the structures, whether directly or through brackets.

B. The design of all anchors is subject to the approval of the Commissioner.

C. Anchors for piping must be of the cast iron chair type with steel straps, except where anchors form an integral part of pipe fitting, or where an anchor of special design is required.

2.5 INSERTS

A. Inserts must be designed to permit the rods to be adjusted horizontally in one (1) plane and to lock the rod nut or head automatically.

B. Inserts must be recessed near the upper flange to receive reinforcing rods.

C. Inserts must be so designed that they may be held in position during concrete pouring operations.

D. Inserts must be designed to carry safely the maximum load that can be imposed by the rods, which they engage.

E. Inserts for concrete must be galvanized.

PART 3 - EXECUTION

3.1 FIELD QUALITY CONTROL

A. The design, workmanship, and erection must conform to the requirements of the AISC Specifications for Design, Fabrication, and Erection of Structural Steel for Buildings, unless otherwise shown, specified, or required.

B. The Contractor is responsible for the correctness of all shop and field fabrication and fit. Members must be straight, must fit closely together, and the finished work must be free from burrs, twists, bends, and open joints.

C. Where shop assembly of field connections is shown, specified or required, the unmatched holes must be reamed and the pieces match marked before disassembly. No drifting will be allowed.

D. In case the eccentricity is too great for good work or the strength of the joint is liable to be weakened by reaming, the piece will be rejected and a new satisfactory one must be provided at the Contractor. This process is considered incidental to the construction and no additional payment will be allowed.

3.2 FIELD CONNECTIONS

A. Weld or bolt all field connections as hereinafter specified unless riveted connections are approved by the Commissioner.

3.3 WELDING

A. Welding must be performed by qualified welders in accordance with the requirements of the AISC Specifications.

B. In assembling and during welding, the component parts of built-up members must be supported and held by sufficient clamps and other adequate means to hold the parts in proper relations for welding.

3.4 STEEL SHEET PILING

A. Drive steel sheet piling to depth as shown, or as approved by the Commissioner.

B. Drive all sheet piling plumb and tight to the lines and grades shown and as directed.

C. The driven sheet piling must be stiffened horizontally, as necessary to meet the requirements of Section 31 23 10 – Excavation, Trenching and Backfilling.

3.5 NUTS, BOLTS**,** AND ANCHORS

A. Anchors must be furnished and installed when specified, shown, or required for holding the pipelines and equipment in position or alignment.

B. Set anchor bolts accurately set to maintain elevation and location, and if placed after concrete is cast, all necessary drilling and grouting must be considered incidental to the construction process and no additional payment will be allowed.

C. Coat anchor bolt threads heavily with grease while concreting.

D. Self-Drilling bolt anchors must be of the sizes indicated or approved.

E. All anchor bolts and nuts submerged or subject to periodic wetting must be of stainless steel unless shown or specified otherwise.

3.6 INSERTS

A. Install inserts in the concrete structures where required for fastening supporting devices.

END OF SECTION 05 10 00

SECTION 03 20 00

CONCRETE REINFORCING

PART 1 - GENERAL

1.1 DESCRIPTION

A. This section includes requirements for material and installation of reinforcing steel for cast-in-place concrete utility structures. This Special Provision is not applicable for other elements within the Project Limits, other than what is shown on the Water Main Drawings.

1.2 REFERENCES

A. American Concrete Institute (ACI), latest edition:

1. ACI 315 - Details and Detailing of Concrete Reinforcement.
2. ACI 318 - Building Code Requirements for Structural Concrete.

B. American Society for Testing and Materials (ASTM), latest edition:

1. ASTM A370 - Test Methods and Definitions for Mechanical Testing of Steel Products.
2. ASTM A615 - Specification for Deformed and Plain Billet Steel Bars for Concrete Reinforcement.
3. ASTM A706 - Specification for Low Alloy Steel Deformed Bars for Concrete Reinforcement.
4. ASTM A775 - Specification for Epoxy-Coated Reinforcing Steel Bars.
5. ASTM A884 - Specification for Epoxy Coated Steel Wire and Welded Wire Fabric for Reinforcement.
6. ASTM D3963 - Specification for Epoxy Coated Reinforcing Steel.

C. Illinois Department of Transportation – Standard Specifications for Road and Bridge Construction (SSRBC), latest edition.

D. IDOT Supplemental Specifications and Recurring Special Provisions (SSRSP), latest edition.

E. Concrete Reinforcing Steel Institute – CRSI Manual, latest edition.

1.3 WORK OF THIS SECTION SPECIFIED ELSEWHERE

A. Section 03 30 00 – Cast-In-Place Concrete.

1.4 SUBMITTALS

A. Refer to Book I – Terms and Conditions for Construction for submittal requirements and procedures for Shop Drawings, Product Data, Records and Samples.

B. Reinforcing Steel.

Submit shop drawings detailing reinforcing steel in accordance with the requirements of ACI 315 and indicating and including the following details and requirements:

1. Bar lists including weights.

2. Bending diagrams and schedules.

3. Placement plans and details.

C. Certificates: Provide mill affidavits or test reports indicating certification or compliance certifying the grades and physical and chemical properties of the reinforcing steel. Certify compliance with applicable ASTM Specifications including ASTM A370, ASTM A775 and ASTM D3963.

1.5 QUALITY ASSURANCE

A. Tolerances:

1. Reinforcing Steel Tolerances: Comply with the requirements of ACI 301, ACI 318 and the CRSI Manual of Standard Practice for fabrication and placement tolerance for reinforcing steel.

PART 2 - PRODUCTS

2.1 MATERIALS

A. Reinforcing Steel:

1. Shall be According to Section 508 of the Illinois Department of Transportation Standard Specifications for Road and Bridge Construction, and applicable Contract Special Provisions.

2.2 Sizes and Weights

A. The minimum cross-sectional areas and the weights per lineal foot of the steel reinforcing bars used in the work will be as shown in Table A based on nominal sizes and shapes:

TABLE A
CROSS-SECTIONAL AREA & WEIGHT/FOOT OF REBARS

BAR DESIGNATION NUMBER	UNIT WEIGHT IN POUNDS PER FOOT	NOMINAL DIAMETER IN INCHES	CROSS SECTIONAL AREA IN SQUARE INCHES
2	0.167	0.250	0.05
3	0.376	0.375	0.11
4	0.668	0.500	0.20
5	1.043	0.625	0.31
6	1.502	0.750	0.44
7	2.044	0.875	0.60
8	2.670	1.000	0.79
9	3.400	1.128	1.00
10	4.303	1.270	1.27
11	5.313	1.410	1.56

2.3 STEEL DOWEL BARS AND PAVEMENT REINFORCING

A. Steel pavement fabric, steel reinforcing bars, epoxy coated steel tie bars, and epoxy coated steel dowel bars for pavement construction, must conform to the requirements of Section 1006.10 of the SSRBC specifications.

PART 3 - EXECUTION

3.1 EXAMINATION

A. The Contractor shall notify the Commissioner giving sufficient time in advance of excavating, erecting formwork and placing reinforcement and concrete to permit a thorough inspection.

3.2 PLACEMENT OF REINFORCING STEEL

A. Place reinforcement as shown on the Contract Drawings, or on approved Shop Drawings, and in accordance with the applicable requirements of ACI 301, ACI 318 and the CRSI Manual. Install reinforcement accurately and secure against movement.

B. All reinforcement must be supported on metal chairs, spacers and hangers, accurately placed and securely fastened to steel reinforcement in place. Hoops and stirrups must be accurately spaced and wired to the reinforcement.

C. Reinforcing steel must be installed in place, spaced and securely tied with steel tie wires at all splices and at all intersections, except where the center to center dimension is less than one foot (1 ft) in each direction, in which case alternate intersections must be tied. The placement must comply with the requirements of CRSI Manual 'Placing Reinforcing Bars'. Bending of bars on the jobsite to fit differing conditions is not permitted. Point end of wire ties away from adjacent form surfaces.

D. Center-to-center distance between parallel bars must be in accordance with ACI 318 unless indicated otherwise on the Contract Drawings.

E. Splices: Laps of splices must be securely tied together to maintain the alignment of the bars, to provide the required minimum clearances and to transfer stress by bond. Lapped splices and development lengths not shown must be detailed to develop Class B lapping length and develop lengths in tension, respectively, in accordance with ACI 318.

F. Prior to the placement of concrete, all mortar and any foreign material must be removed from the reinforcement. Placement of concrete must not commence until the Commissioner has verified that all reinforcement has been placed in the areas designated on the plans, but does not relieve the Contractor of his responsibility for properly placing, supporting and securing the reinforcement.

END OF SECTION 03 20 00

SECTION 03 30 00

CAST-IN-PLACE CONCRETE

PART 1 - GENERAL

1.2 DESCRIPTION

A. This section includes requirements for the construction of cast-in-place concrete for utility structures where shown on the Water Main Drawings or specified here. This Special Provision is not applicable for other elements within the Project Limits, other than what is shown on the Water Main Drawings.

1.3 REFERENCES

A. American Concrete Institute (ACI), latest edition:

1. ACI 117 - Standard Specification for Tolerances for Concrete Construction and Materials.
2. ACI 301 - Standard Specifications for Structural Concrete.
3. ACI 302.1R - Guide for Concrete Floor and Slab Construction.
4. ACI 304R - Guide for Measuring, Mixing, Transporting, and Placing Concrete.
5. ACI 305R - Hot Weather Concreting.
6. ACI 306.1 - Standard Specification for Cold Weather Concreting.
7. ACI 308 - Standard Practice for Curing Concrete.
8. ACI 309R - Guide for Consolidation of Concrete.
9. ACI 315 - Details and Detailing of Concrete Reinforcement.
10. ACI 318 - Building Code Requirements for Structural Concrete.
11. ACI 503.2 - Standard Specification for Bonding Plastic Concrete to Hardened Concrete with a Multi-Component Epoxy Adhesive.

B. American Society for Testing and Materials (ASTM), latest edition:

1. ASTM C31 - Standard Practice of Making and Curing Concrete Test Specimens in the Field.
2. ASTM C94 - Specification for Ready-Mixed Concrete.

C. Illinois Department of Transportation – Standard Specifications for Road and Bridge Construction (SSRBC), latest edition.

D. Illinois Department of Transportation – Supplemental Specifications and Recurring Special Provisions (SSRSP), latest edition.

1.4 WORK OF THIS SECTION SPECIFIED ELSEWHERE

A. Section 31 23 10 - Excavation, Trenching and Backfilling.
B. Section 03 20 00 - Concrete Reinforcing.

1.5 SUBMITTALS

A. Refer to Book I for submittal requirements and procedures for Shop Drawings, Product Data, Records and Samples.

B. Structural Concrete Shop Drawings:

1. Submit drawings that indicate the locations of all joints in concrete, including construction joints, expansion joints, isolation joints, and contraction joints.

2. Submit drawings that indicate concrete placement schedule, method, sequence, location, and boundaries. Include each type and class of concrete, and quantity in cubic yards.

C. Concrete Forming:

Submit shop drawings for concrete forming indicating and including the following details and requirements:

1. Forming system and method of erection with associated details.

2. Shoring accompanied by design calculations.
3. Locations of construction joints.

4. Location and sizes of conduits, openings, recesses, pipes, ducts and other attached or embedded products.

5. Chamfer strips for corner treatment.

6. Method and schedule for removing forms and shoring.

7. Method for detecting formwork movement during concrete placement.

D. Product Data: Submit manufacturer's product data for epoxy adhesive.

E. Records and Reports: Report the location in the finished work of each mix design, and the start and completion times of placement of each batch of concrete placed for each date concrete is placed.

1.6 QUALITY CONTROL

A. Concrete Tolerances must comply with the requirements of ACI 117 as applicable.

B. Cold Joints: Cold joints in concrete will not be permitted unless planned and treated properly as construction joints.

C. Monitoring of Formwork: Provide monitoring of forms and embedded items to detect movement, or forms and embedded items out-of-alignment, from pressure of concrete placement.

D. Provide 100% quality control (QC) independent of said Contractor for all field testing in accordance with CDOT and IDOT Standards. The Contractor is responsible for notifying CDOT and the DWM Commissioner no later than 2pm on the day prior to the concrete

placement. All provisions required for tests, samples and inspections are considered incidental to the Work and no additional payment is allowed.

1.7 ENVIRONMENTAL REQUIREMENTS

A. It is the contractor's responsibility (at no additional cost to the City) to deliver and place concrete in hot weather. This work must conform to the applicable requirements of ACI 305R and ACI 306.1.

B. Delivering and placing of concrete in cold weather must conform to the applicable requirements of ACI 305R and ACI 306.1 On-site additional winter protection will be paid under a separate bid item (WINTER PROTECTION).

C. Do not place concrete when the rate of evaporation of surface moisture from concrete exceeds 0.2 pounds per square foot per hour as indicated in Figure 2.1.5 of ACI 305R.

PART 2 - PRODUCTS

2.1 MATERIALS

A. Formwork

1. Wood forms must be built of clean, sound lumber, reasonably free from knots and dressed on all sides.

2. The forms, either of steel or wood, must be watertight, with smooth surfaces, and of ample strength and rigidity. Bracing for forms must be adequate to prevent deviation from the correct lines. The forms must be coated with oil or other suitable substance that is satisfactory to obtain a smooth concrete surface. The coating must be carefully applied so none is deposited on the reinforcement steel.

3. Forms must be neatly and accurately made with all similar parts in each longitudinal section interchangeable. Bent plates required to fit must be rolled and fabricated to correct curves before being assembled.

4. All forms must be thoroughly cleaned after each use with any broken, warped or defective parts removed. Minor repairs of forms will be permitted, but any form that requires more than minor repairs in order to obtain first-class work must not be re used. The Commissioner, at his sole discretion, reserves the right to condemn any form that may compromise the structural integrity or appearance of the work, and the Contractor must at once correct the defective form or remove it from the site of the work, whichever the Commissioner may order.

B. Portland Cement Concrete for Cast-In-Place Utility Structures and Pipe Class SI Concrete conforming to Section 1020 of the SSRBC except for sewer structures and pipe, or as otherwise specified here.

1. Compressive Strength: The concrete for utility structures must have a compressive strength of not less than 3,500 pounds per square inch at the age of fourteen (14) days and not less than 4,000 pounds per square inch at the age of 28 days when tested by standard methods.

2. Admixture: The use of admixtures in the concrete for any purpose other than for air entrainment will not be permitted.

3. Air Entrainment: The amount of entrained air must not be less than 5% nor more than 8% of the volume of the concrete. The air entrainment must be produced by the use of “Darex” or other approved air-entraining agent.

4. All cement used in concrete for sewers and sewer structures must be a blend of Type I Portland cement and Fly Ash. Type I cement

and Fly Ash must not be less than 5 bags of Type I cement and 100 pounds of Fly Ash per cubic yard of concrete. Type I Portland cement must conform to the requirements of "Standard Specifications for Portland Cement," ASTM Designation C 150.

5. Fly Ash will conform to the requirements of "Tentative Specifications for Fly Ash for Use As an Admixture in Portland Cement Concrete," ASTM Designation C 618, except that the Free Carbon will not exceed 3.0 percent. **Fly Ash is not to be used in concrete mixtures to be in contact with water main pipe and / or other exposed metals for thrust restraint systems and appurtenances.**

6. The fine aggregate for concrete must conform to grade FA2 of the SSRBC.

C. Portland Cement Concrete for Pavements, Base Course, Sidewalks, Curbs and Gutters, Driveways and Alley Aprons.

1. The materials, proportioning, mixing, transporting, curing and protection of Portland cement concrete must be in conformance with Section 1020 of the SSRBC, except that air entrainment in the concrete must be produced by an approved air-entraining agent.

2. Classes of Portland Cement Concrete.
   a. Class SI for Normal Strength– general use, utility structures, sidewalks, curbs, sign footings, and miscellaneous uses. Minimum Compressive Strength 3500 PSI at 14 Days.
   b. Class PP-1 for High Early Strength – use for patching pavements. Minimum Compressive Strength 3200 PSI at forty eight (48) hours.
   c. Class PV, High Early Strength (HES) Concrete – use for all concrete pavements. An IDOT/CDOT approved patching mixture shall be used with a minimum cement factor of

6.50cwt and a maximum cement factor of 7.05cwt. Type III cement shall not be permitted. Minimum Compressive Strength 3500 PSI at three (3) Days.

3. Concrete Slump for ADA Ramps must be between 2" and 4" inclusive

4. Rapid Hardening Cement, IDOT Class PP-5 [From IDOT BDE Specification Revised November 1, 2007]:

   a. Maximum and Minimum Cement factor: 6.75 cwt/cy (400 kg/cm).

   b. Cement shall be calcium aluminate meeting the standard physical requirements for Type I cement according to ASTM C 150, except the time of setting shall not apply. The chemical requirements shall be determined according to ASTM C114 and shall be as follows: minimum 38 percent aluminum oxide (Al_2O_3), maximum 42 percent calcium oxide (CaO), maximum 1 percent magnesium oxide (MgO), maximum 0.4 percent sulfur trioxide (SO_3), maximum 1 percent loss on ignition, and maximum 3.5 percent insoluble residue.

   c. Maximum final set time of 25 minutes according to Illinois modified ASTM C 191.

   d. The cement shall have a Minimum compressive strength of 2,000 psi at 3.0 hours and 4,000 psi at 24.0 hours according to Illinois modified ASTM C 109.

   e. The cement shall have a Maximum drying shrinkage of 0.050 percent at seven days, according to Illinois modified ASTM C596.

f. The cement shall have a Maximum expansion of 0.020 percent at 14 days according to Illinois modified ASTM C 1038.

g. The cement shall have a Minimum 80% relative dynamic modulus of elasticity; and shall not have a weight (mass) gain in excess of 0.15% or a weight (mass) loss in excess of 1.0 percent, after 100 cycles, according to Illinois modified AASHTO T 161, Procedure B. At 100 cycles, the specimens are measured and weighed at 73 degrees Fahrenheit (23 degrees Celsius).

D. Joint Filler

1. Bituminous preformed joint filler must conform to the requirements of Section 1051 of the SSRBC.

E. Protective Coat for Exposed Concrete Surfaces

1. The protective coat is to consist of a mixture of linseed oil and petroleum spirits and conform to the requirements of Section 1023 of the SSRBC.

PART 3 - EXECUTION

3.1 EXAMINATION

A. The Contractor shall notify the Commissioner, giving sufficient time in advance of removal of surface features, excavating, erecting formwork and placing concrete, to permit thorough inspection.

3.2 PREPARATION

.

A. Provide excavation, bedding and backfill as specified in Section 31 23 10 - Excavation, Trenching and Backfilling.

B. Locate and stake out all forms and establish all lines, levels and elevations. Construct formwork in accordance with the approved Shop Drawings and in a manner that will produce finished concrete surfaces conforming to the indicated design and within specified tolerances. The forms must be coated with oil or other suitable substance to obtain a smooth concrete surface. Maintain all surfaces upon which concrete is to be placed free of debris and mud.

C. Place concrete under the observation of the Commissioner and with the Contractor's Quality Control Representative present to document requirements and results of the placement.

D. Whenever possible, place concrete during normal working hours. When concrete- placement schedules require concrete placement at times other than normal working hours, ensure that the Commissioner is notified and is present at the time of placement.

E. Do not place concrete until conditions and facilities for the storage, handling, and transportation of concrete test specimens are in compliance with the requirements of ASTM C31 and are approved by the Commissioner.

F. Prior to placement of concrete, the subgrade must be in a firm, well- drained condition, and of adequate and uniform load-bearing nature to support construction personnel, construction materials, construction equipment, and steel reinforcing mats without tracking, rutting, heaving, or settlement. As directed by the Commissioner, all weak, soft, saturated, or otherwise unsuitable material must be removed and replaced with structural backfill or lean concrete.

3.3 TRANSPORTING

A. Transport concrete to the jobsite in a manner that will assure efficient delivery of concrete to the point of placement without adversely altering

specified properties with regard to water-cement ratio, slump, air entrainment, and homogeneity.

3.4 REINFORCING STEEL

A. Furnish and place reinforcement in accordance with Section 03 20 00 - Concrete Reinforcing.

3.5 CONVEYING AND PLACING

A. Placement Standards: Conveying and placing of concrete must conform with applicable requirements of ACI 301, ACI 302.1R, ACI 304R, and ACI 318.

B. Handling and Depositing:

1. Concrete placing equipment must have sufficient capacity to provide a placement rate that will preclude cold joints and that must deposit the concrete without segregation or loss of ingredients.

2. Concrete placement, once started, must be carried on as a continuous operation until the section of approved size and shape is completed.

3. Concrete must be handled as rapidly as practicable from the mixer to the place of final deposit by methods that prevent the separation or loss of ingredients. Concrete must be deposited, as nearly as practicable, in its final horizontal position to avoid redistribution or flowing.

4. Prevent segregation of materials while depositing concrete. During chuting, provide for a continuous flow without increasing the water over that specified. The discharge end of the chute must be provided with a baffle plate to prevent segregation. Slopes of chutes are not to be flatter than 1 to 3 or steeper than 1 to 2.

Concrete must not be dropped into place a distance greater than 3 feet. A tremie is to be used for placement to reach places that are otherwise inaccessible. Concrete must be deposited to maintain a plastic surface approximately horizontal.

5. Concrete that has partially hardened must not be deposited in the work. The discharge of concrete must be started not later than 60 minutes after the introduction of mixing water. Placing of concrete must be completed within 90 minutes after the first introduction of water into the mix.

6. Once started, the placing of concrete in any unit must be a continuous operation. If any unavoidable break in the operation occurs before the completion of a unit, a construction joint must be formed at the proper location, either by bulk heading, or in case of a vertical pour, by leveling off. The joint must be properly keyed, as specified in Section 03 30 00 (Paragraph 3.8), and if required, additional reinforcement bars must be placed as directed by the Commissioner, without additional cost to the City.

3.6 COLD WEATHER OPERATIONS

A. The Contractor must not place concrete when the temperature is, or is forecast by the U.S. Weather Bureau to be less than 20 degrees Fahrenheit.

B. Whenever temperatures are forecast by the U.S. Weather Bureau to be between 20 degrees Fahrenheit and 40 degrees Fahrenheit, it is the contractor's responsibility to implement the following provisions for protection of the concrete against freezing:

1. Mixing water must be heated but must not exceed a temperature of 175 degrees Fahrenheit.

2. Aggregates must be heated, either by steam jet, steam coils or other approved means prior to being placed in the mixer.

Aggregate containing frozen lumps, snow or ice must not be allowed to enter the mixer.

3. Concrete must be mixed as dry as practicable for the class or work and must reach the forms at a temperature not lower than 50 degrees Fahrenheit, nor higher than 90 degrees Fahrenheit. Freshly placed concrete and the surrounding air must be maintained at a temperature of not less than 50 degrees Fahrenheit, for a period of five (5) days after placement in the work. If necessary, the contractor must house the section being concreted, by placing canvas or other suitable covering, so that the specified temperature will be maintained.

4. When placing a concrete arch or roof slab, as soon as hardening of concrete will permit, the upper surface of the concrete must be covered with loose, dry straw or hay to a depth of at least 12 inches. Such covering must remain in place until it is replaced by at least one foot of unfrozen backfill material. The Contractor must provide continuous and sufficient circulating artificial heat inside the structure whenever it is necessary to maintain the required curing temperature. Heating appliances must not be placed in such a manner as to endanger formwork or centering or expose any area of concrete to drying out or other injury due to temperatures in excess of those specified above.

5. Before placing concrete in any form or on any surface, heat must be applied in such a manner that all ice or snow is completely removed. Concrete must not be placed on or against forms, other concrete, earth or rock containing frost.

B. All concrete or mortar damaged by freezing must be removed and replaced with new concrete or mortar as directed by the Commissioner.

C. All additional cost to the Contractor for the protection of concrete during cold weather or the removal and replacement of frozen concrete or mortar must be included in the unit or lump sum prices to be paid for the work

necessary under the appropriate items, and no additional payment therefore will be made to the contractor.

3.7 CONSOLIDATION

A. Concrete must be thoroughly consolidated and compacted by mechanical vibration during placement in accordance with the requirements of ACI 309R.

B. All concrete must be thoroughly worked into place and consolidated around reinforcement, ladder rungs, pipes or other shapes by internal or external vibrators, or both, of types acceptable to the Commissioner. Such vibration must be continuous with the placing of the concrete and must continue until no further settlement of the concrete mass is observed.

C. Conduct vibration in a systematic manner by competent, skilled, and experienced workers, with regularly maintained vibrators, and with sufficient back-up units at the jobsite.

D. Conduct vibration so as to produce concrete that is of uniform texture and appearance, free of honeycombing, air and rock pockets, streaking, cold joints, and visible lift lines.

3.8 CONSTRUCTION JOINTS

A. Construction joints are permitted only where indicated or approved by the Commissioner. Locate joints that are not indicated so that the strength of the structure is not impaired. Joint types and their locations are subject to prior approval of the Commissioner.

B. Provide and prepare construction joints in accordance with the applicable requirements of ACI 301 and ACI 304R.

C. Make construction joints straight and as inconspicuous as possible, and in exact vertical and horizontal alignment with the structure, as the case may be.

D. The top and end surfaces of the concrete first placed must be grooved or stepped. Use approved key, at least 1-1/2-Inches in depth, at joints unless otherwise indicated or approved by the Commissioner.

E. Thoroughly clean the surface of the concrete at construction joints and remove laitance, loose or defective concrete, coatings, sand, sealing compound and other foreign material. Prepare surfaces of joints to remove laitance and expose aggregate uniformly.

F. Immediately before new concrete is placed, wet the joint surfaces and remove standing water. To allow for shrinkage, do not place new concrete against the hardened concrete side of a construction joint for a minimum of 72 hours.

G. Ensure that reinforcement is continuous across construction joints.

H. Where bonding of the joint is required, provide epoxy adhesive in accordance with ACI 503.2.

I. Retighten forms and dampen concrete surfaces before concrete placing is continued.

J. At vertical surfaces, the freshly placed concrete must be worked sufficiently to obtain an excess of mortar against the joint. Horizontal or near horizontal surfaces, after being cleaned, must be completely coated with not less than a ½ Inch of mortar, composed of equal parts of Portland cement and sand.

K. Allow at least 72 hours to elapse before continuing concrete placement at a construction joint. Approval for accelerating the minimum time elapsing between adjacent placements will be based on tests and methods that confirm that a minimum moisture loss at a relatively constant temperature will be maintained for the period as necessary to control the heat of hydration and hardening of concrete, and to prevent shrinkage and thermal cracking.

3.9 PARTS SET IN CONCRETE

A. Before concreting, the Contractor must carefully place all pipe, castings, ladder rungs and other miscellaneous parts in the work as shown on the Plans or as directed by the Commissioner.

3.10 CURING AND PROTECTION

A. Curing of concrete must conform to the applicable requirements of ACI 301 and ACI 308. A curing compound must be administered to all concrete surfaces constructed and opened to traffic in accordance with SSRBC. Curing with earth, sand, sawdust, straw, and hay will not be permitted.

B. Keep concrete in a moist condition from the time it is placed until it has cured for at least ten (10) days. Keep forms damp and cool until removal of forms.

C. Immediately upon removal of forms, exposed concrete surfaces must be kept moist by applying an approved curing compound.

D. Concrete must not be permitted to dry during the curing period because of finishing operations.

E. Protect fresh concrete from hot sun, drying winds, rain, damage, or soiling. Fog spray freshly placed slabs after bleed water dissipates and after finishing operations commence. Allow no slabs to become dry at any time until finishing operations are complete.

F. Protect concrete from injurious action of the elements and defacement of any kind. Protect exposed concrete corners from traffic or use that will damage them in any way.

G. Protect concrete during the curing period from mechanical and physical stresses that may be caused by heavy equipment movement, subjecting the concrete to load stress, load shock, or excessive vibration.

3.11 FINISHING

A. Finish all interior surfaces to a smooth form finish per ACI.

B. Finish monolithic concrete sewer inverts to a smooth troweled finish per ACI.

3.12 REPAIR OF SURFACE DEFECTS

A. Repair surface defects in conformance with the applicable requirements of ACI.

3.13 FIELD QUALITY CONTROL

A. Testing and Inspecting: Contractor must provide an IDOT qualified PCC testing agency independent of said contractor to perform tests and inspections and to submit reports for all Work. The cost of this testing is incidental to all concrete work.

B. Concrete Tests: Testing of composite samples of fresh concrete obtained according to ASTM C 172 shall be performed according to the following requirements:

1. Testing Frequency: Obtain at least one composite sample for each 50 cu. yd. or fraction thereof of each concrete mixture placed each day.

2. Slump: ASTM C 143/C 143M; one test at point of placement for each composite sample, but not less than one test for each day's pour of each concrete mixture. Perform additional tests when concrete consistency appears to change.

3. Air Content: ASTM C 231, pressure method, for normal-weight concrete; one test for each composite sample, but not less than one test for each day's pour of each concrete mixture.

4. Concrete Temperature: ASTM C 1064/C 1064M; one test hourly when air temperature is 40 degree Fahrenheit and below and when 80 degree Fahrenheit and above, and one test for each composite sample.

5. Compression Test Specimens: ASTM C 31/C 31M; cast and field cure **two** (2) sets of two standard cylinder specimens for each composite sample.

6. Compressive-Strength Tests: ASTM C 39/C 39M; test one set of two laboratory-cured specimens at forty-eight (48) hours for PP-1, three (3) days for SI and PV and one set of two specimens at fourteen (14) days for all mixes.

7. Test results shall be reported in writing to the Commissioner within forty-eight (48) hours of testing. Reports of compressive-strength tests shall contain Contract Number, project number, project location, and date of concrete placement, name of concrete testing and inspecting agency, location of concrete batch in Work, design compressive strength at twenty-eight (28) days, concrete mixture proportions and materials, compressive breaking strength, and type of break for all tests.

8. The Contractor must replace all deficient Work to the satisfaction of the Commissioner.

END OF SECTION 03 30 00

STANDARD SYMBOLS

LEGEND

- EXISTING MANHOLE
- EXISTING CATCH BASIN
- EXISTING FIRE HYDRANT
- EXISTING TREE
- EXISTING LIGHT POLE
- EXISTING SIGN
- EXISTING CONTROLLER
- EXISTING POWER POLE
- EXISTING INLET
- EXISTING SIGNAL
- EXISTING HANDHOLE

A A	AERIAL LINE
E E E	COMMONWEALTH EDISON
W W	WATER DISTRIBUTION
T T T	AMERITECH TELEPHONE
G G	PEOPLES GAS
	COMBINED SEWER
	CHICAGO TARP TUNNEL
	STORM SEWER
	RIGHT OF WAY LINE

TRAFFIC DATA

IRVING PARK RD:
ADT (2016): 34,500
DESIGN SPEED: 35 MPH
POSTED SPEED: 30 MPH

PLAN SCALES

0 20 40 60
SCALE IN FEET

0 50 100 150
SCALE IN FEET

CITY OF CHICAGO

RAHM EMANUEL, MAYOR

DEPARTMENT OF TRANSPORTATION

REBEKAH SCHEINFELD, COMMISSIONER

DIVISION OF ENGINEERING

DANIEL BURKE, P.E., S.E., DEPUTY COMISSIONER

CONTRACT PLANS

FOR

IRVING PARK ROAD BRIDGE OVER NORTH BRANCH CHICAGO RIVER

SECTION NO. 05-E5038-00-BR
FED PROJECT NO. PHGK(424)
STATE PROJECT NO. C-88-046-06
CDOT PROJECT NO. E-5-038
SPECIFICATION NO. 425139

CITY OF CHICAGO
DEPARTMENT OF TRANSPORTATION

DATE: 11/28/2017

APPROVED: _____ PROJECT MANAGER

APPROVED: _____ CHIEF BRIDGES ENGINEER

APPROVED: _____ DEPUTY COMMISSIONER DIVISION OF ENGINEERING

APPROVED: _____ COMMISSIONER

STATE OF ILLINOIS
DEPARTMENT OF TRANSPORTATION

PASSED: 3-5 2018

_____ DISTRICT ENGINEER OF LOCAL ROADS & STREETS

RELEASING FOR BID BASED ON LIMITED REVIEW: 3-6 2018

_____ REGION 1 ENGINEER

CHICAGO PARK DISTRICT

DATE: November 30, 2017

APPROVED: _____ PLANNING AND CONSTRUCTION

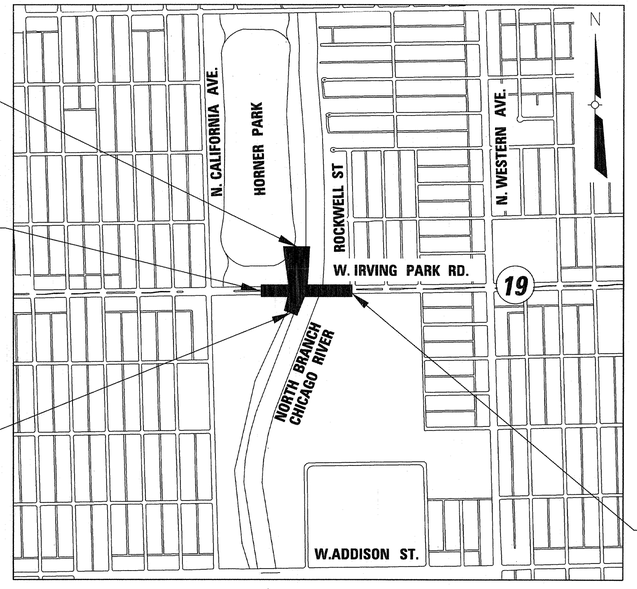

TRAIL END STA. 208+50

PROJECT BEGINS STA 93+58

TRAIL BEGINS STA. 200+06

PROJECT END STA 102+30

LOCATION MAP

NOT TO SCALE

GROSS LENGTH = 870 FT.

THIS CERTIFIES THAT THESE DRAWING HAVE BEEN REVIEWED TO THE BEST OF MY KNOWLEDGE AND THAT I BELIEVE THEY ARE IN ACCORDANCE WITH THE AMERICANS WITH DISABILITIES ACT (ADA) AND ALL CODES AND BUILDING ORDINANCES OF THE CITY OF CHICAGO, STATE OF ILLINOIS

_____ NAME HERE

DEPARTMENT OF PROCUREMENT SERVICES
JAMIE L. RHEE, CHIEF PROCUREMENT OFFICERS

DANIEL S. FILICE 062-057500 REGISTERED PROFESSIONAL ENGINEER STATE OF ILLINOIS

DANIEL S. FILICE, P.E.
IL REGISTRATION NO. 062-057500
EXPIRATION DATE 11/30/19
SHT NO. 5-12, 46-51A

ROBERT P. ISRAEL 62-44817 REGISTERED PROFESSIONAL ENGINEER STATE OF ILLINOIS

ROBERT ISRAEL, P.E.
IL REGISTRATION NO. 062-044817
EXPIRATION DATE 11/30/19
SHT NO. 1-4, 13-33, 40-45, 52-82

MOHAMMED K. RASHED 062-053645 LICENSED PROFESSIONAL ENGINEER OF ILLINOIS

MOHAMMED RASHED, P.E.
IL REGISTRATION NO. 062-053645
EXPIRATION DATE 11/30/19
SHT NO. 83-100

DANIEL S. FILICE 081-007107 LICENSED STRUCTURAL ENGINEER STATE OF ILLINOIS

DANIEL S. FILICE, S.E.
IL REGISTRATION NO. 081-007107
EXPIRATION DATE 11/30/18
SHT NO. 101-115, 118-180

MARK M. STROMBERG 001-017758 LICENSED ARCHITECT STATE OF ILLINOIS

MARK STROMBERG, AIA, LEED AP
IL REGISTRATION NO. 001017758
EXPIRATION DATE 11/30/18
SHT NO. 116-117, 181-184

STATE OF ILLINOIS WILLIAM J. FERGUSON No. 157.000126 Exp. 08-31-2019 REGISTERED LANDSCAPE ARCHITECT

WILLIAM FERGUSON, ASLA
IL REGISTRATION NO. 157-000126
EXPIRATION DATE 8/31/19
SHT NO. 34-39

BOWMAN, BARRETT & ASSOCIATES INC.
CONSULTING ENGINEERS
Chicago, Illinois
312.228.0100
www.bbandainc.com

EJM ENGINEERING, INC.
411 South Wells Street Suite 1000
Chicago, Illinois 60607

DANIEL WEINBACH & PARTNERS, LTD.
Landscape Architects
53 W. Jackson Blvd. Suite 250 Chicago, IL 60604
p 312 427-2888 f 312 427-7848 www.dwpltd.com

MULLER+MULLER

TOTAL SHEETS	SHEET NO.
184	2

INDEX OF DRAWINGS

DRAWING NO.			SHEET NO.			SHEET TITLE
1						COVER SHEET
2			GEN-1			INDEX OF DRAWINGS AND LIST OF HIGHWAY STANDARDS
3	TO	4	GEN-2	TO	GEN-3	GENERAL NOTES
5	TO	12	SOQ-1	TO	SOQ-8	SUMMARY OF QUANTITIES
13			ALI-1			ALIGNMENT AND TIES
14	TO	17	TYP-1	TO	TYP-4	TYPICAL SECTIONS
18	TO	23	MOT-1	TO	MOT-6	MAINTENANCE OF TRAFFIC
24			REM-1			REMOVAL PLAN
25	TO	28	RDP-1	TO	RDP-4	PLAN AND PROFILE
29			RDP-5			IRVING PARK ROAD - ELEVATION DETAILS
30			RDP-5			PATH PAVEMENT ELEVATION DETAILS
31	TO	33	PMK-1	TO	PMK-3	SIGNING AND PAVEMENT MARKING
34	TO	35	L-01	TO	L-02	TREE PRESERVATION PLAN
36	TO	38	L-03	TO	L-05	LANDSCAPE PLAN
39			L-06			LANDSCAPING DETAILS
40			EC-1			EROSION AND SEDIMENT CONTROL GENERAL NOTES AND SCHEDULE
41	TO	42	EC-2	TO	EC-3	EROSION AND SEDIMENT CONTROL PLAN
43	TO	45	DR-1	TO	DR-3	DRAINAGE & UTILITY PLAN
46			DR-4			CONCRETE END SECTIONS FOR PIPE CULVERTS
47			DR-5			PAVED DITCH FOR PIPE CULVERT
48			DR-6			CONCRETE COLLAR DETAILS
49			WM-1			WATERMAIN RELOCATION PLAN
50	TO	51A	WM-2	TO	WM-4	WATERMAIN DETAILS
52	TO	53	GRD-1	TO	GRD-2	GRADING PLAN
54			EW-1			EARTHWORK SCHEDULE
55	TO	73	XSC-1	TO	XSC-19	PATH CROSS SECTIONS
74	TO	82	SD-1	TO	SD-9	STANDARD DETAILS
83			E-1			STREET LIGHTING GENERAL NOTES
84			E-2			STANDARD CODE FOR TRAFFIC SIGNALS/STREET LIGHTING
85			E-3			STREET LIGHTING FOUNDATION AND CONDUIT PLAN
86			E-4			STREET LIGHTING AND CABLE PLAN
87			E-5			STREET LIGHTING REMOVAL PLAN
88	TO	96	E-6	TO	E-14	STREET LIGHTING DETAILS
97	TO	98	E-15	TO	E-16	LIGHTING PLAN SHARED-USE PATH
99			E-17			UNDERPASS LIGHTING DETAILS
100			E-18			LIGHTING DETAILS SHARED-USE PATH
101	TO	161	S-1	TO	S-61	SN 016-6090 STRUCTURE PLANS
162	TO	163	DET-1	TO	DET-2	FOR INFORMATION ONLY
164	TO	168	RW-1	TO	RW-5	RETAINING WALL 1
169	TO	179	RW-6	TO	RW-16	RETAINING WALL 2
180			RW-17			RETAINING WALL 3
181			A-01			ARCHITECTURAL SITE PLAN
182	TO	183	A-02	TO	A-03	ORNAMENTAL FENCE ARCHITECTURAL PLAN AND ELEVATIONS
184			A-04			ARCHITECTURAL DETAILS

LIST OF CDOT HIGHWAY STANDARDS

STANDARD NO.	STANDARD NAME
A-6-1	AREA IN TRAFFIC CONTROL ZONE
A-6-6A	URBAN LANE CLOSURE, 1W, 2W WITH NON-TRAVERSABLE MEDIAN
A-6-8A	URBAN LANE CLOSURE, MULTILANE, 2W WITH MOUNTABLE MEDIAN
A-6-8B	URBAN LANE CLOSURE, MULTILANE, 2W WITH MOUNTABLE MEDIAN
A-6-10A	TRAFFIC CONTROL DEVICES
A-6-10B	TRAFFIC CONTROL DEVICES
A-6-10C	TRAFFIC CONTROL DEVICES
A-6-11	CROSSWALK AND SIDEWALK CLOSURE

LIST OF IDOT HIGHWAY STANDARDS

STANDARD NO.	STANDARD NAME
000001-06	STANDARD SYMBOLS, ABBREVIATIONS AND PATTERNS
280001-07	TEMPORARY EROSION CONTROL SYSTEMS
420401-12	PAVEMENT CONNECTOR (PCC) FOR BRIDGE APPROACH SLAB
542301-03	PRECAST REINFORCED CONCRETE FLARED END SECTION
602001-02	CATCH BASIN TYPE A
602011-02	CATCH BASIN TYPE C
602301-04	INLET - TYPE A
602401-03	MANHOLE TYPE A
604001- 04	FRAMES AND LIDS TYPE 1
604041-03	FRAME AND GRATE TYPE 9
604046-03	FRAME AND GRATE TYPE 10
606001-06	CONCRETE CURB TYPE B AND COMBINATION CURB AND GUTTER
606101-05	TYPE A GUTTER
606201-03	TYPE B GUTTER
606206-03	OUTLET TYPE 1 FOR TYPE B GUTTER
664001-02	CHAIN LINK FENCE
701427-05	LANE CLOSURE, MULTILANE, INTERMITTENT OR MOVING OPER., FOR SPEEDS <= 40MPH
701601-09	URBAN LANE CLOSURE, MULTILANE, 1W OR 2W WITH NON TRAVERSABLE MEDIAN
701602-08	URBAN LANE CLOSURE, MULTILANE, 2W WITH BIDIRECTIONAL LEFT TURN LANE
701701-10	URBAN LANE CLOSURE, MULTILANE INTERSECTION
701801-06	SIDEWALK, CORNER OR CROSSWALK CLOSURE
701901-06	TRAFFIC CONTROL DEVICES
704001-08	TEMPORARY CONCRETE BARRIER
720001-01	SIGN PANEL MOUNTING DETAILS
720006-04	SIGN PANEL ERECTION DETAILS
780001-05	TYPICAL PAVEMENT MARKINGS
782006	GUARDRAIL AND BARRIER WALL REFLECTOR MOUNTING DETAILS

LIST OF IDOT DISTRICT 1 STANDARDS

STANDARD NO.	STANDARD NAME
TC-10	TRAFFIC CONTROL AND PROTECTION FOR SIDE ROADS, INTESECTIONS AND DRIVEWAYS
TC-14	TRAFFIC CONTROL AND PROTECTION AT TURN BAYS (TO REMAIN OPEN TO TRAFFIC)
TC-16	SHORT TERM PAVEMENT MARKING LETTERS AND SYMBOLS
TC-22	ARTERIAL ROAD INFORMATION SIGN
TC-24	CITY OF CHICAGO TYPICAL PAVEMENT MARKINGS

...\Cadd Sheets\E5038-sht-Index
11/29/2017 1:35:50 PM

DESIGN:	BJD				
DRAWN:	BJD				
CHECKED:	SA				
APPROVED:					
DATE:	11/29/2017				
SCALE:	NTS				
FILE:		NO.	BY	DATE	DESCRIPTION
		REVISIONS			

KEY PLAN:

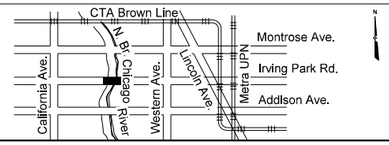

CDOT
CHICAGO DEPARTMENT OF TRANSPORTATION

EJM ENGINEERING, INC.
411 South Wells Street Suite 1000
Chicago, Illinois 60607

W. IRVING PARK ROAD AT NORTH BRANCH CHICAGO RIVER

INDEX OF DRAWINGS AND LIST OF HIGHWAY STANDARDS

PROJECT NO. E-5-038

DRAWING NO. GEN–1

CONTRACT NO. XXXXX

TOTAL SHEETS	SHEET NO.
184	3

1. ALL ELEVATIONS SHOWN ON THE PLANS REFER TO CHICAGO CITY DATUM, WHICH IS 579.88 FEET ABOVE SEA LEVEL, NEW YORK 1935 ADJUSTMENT.

2. ALL DIMENSIONS SHOWN ON THE PLANS ARE TO THE FACE OF CURB UNLESS OTHERWISE NOTED.

3. THE CONTRACTOR SHALL IMMEDIATELY NOTIFY THE DEPARTMENT OF TRANSPORTATION OF ANY DAMAGE TO CITY OWNED AND MAINTAINED TRAFFIC SIGNS, SIGNALS, GUARDRAILS, FENCES, ETC.

4. THE CITY DOES NOT GUARANTEE THE COMPLETENESS OR ACCURACY OF THE INFORMATION SHOWN ON THE DRAWINGS, INCLUDING UTILITIES. THE CONTRACTOR MUST VERIFY EXACT LOCATION OF ALL UTILITES THAT MAY INTERFERE WITH CONSTRUCTION OPERATIONS AND MUST REPORT TO THE COMMISSIONER ANY OMISSIONS AND DIFFERENCES FROM THE LOCATIONS SHOWN ON THE DRAWINGS.

5. ACCESS TO EXISTING CROSS ROADS, ALLEYS AND DRIVES MUST BE MAINTAINED AT ALL TIMES DURING CONSTRUCTION. ANY CLOSURES MUST BE APPROVED AND PERMITTED BY THE COMMISSIONER IN WRITING IN ADVANCE.

6. ALL PARTIES INVOLVED IN CONSTRUCTION OPERATIONS WITHIN THE LIMITS OF THE PROJECT SHALL BE RESPONSIBLE FOR CONTACTING CHICAGO UTILITY ALERT NETWORK, (312)-744-7000, FOR EXISTING UTILITIES SO THAT THE UTILITIES AND THEIR APPURTENANCES MAY BE LOCATED, AND ADJUSTED OR MOVED, IF NECESSARY, PRIOR TO THE START OF CONSTRUCTION OPERATIONS. ALL PARTIES SHALL COOPERATE WITH ALL THE PROPERTY OWNERS AS PROVIDED FOR IN THE STANDARD SPECIFICATIONS.

7. ANY UTILITY THAT IS DAMAGED DURING CONSTRUCTION SHALL BE REPAIRED OR REPLACED BY THE CONTRACTOR AT HIS/HER OWN EXPENSE.

8. PRIVATE UTILITY COMPANIES OR THEIR CONTRACTORS WILL PERFORM THE REQUIRED ADJUSTMENTS, RELOCATION OR SUPPORTS TO THEIR UTILITIES. THE CONTRACTOR SHALL NOTIFY THE AFFECTED UTILITY OWNERS IN ADVANCE, ALLOWING SUFFICIENT TIME TO COMPLETE THE WORK IN ACCORDANCE WITH THE CONTRACTORS SCHEDULE. COORDINATION EFFORTS WILL BE INCLUDED IN THE COST OF "MOBILIZATION".

9. ANY PAVEMENT REMOVAL AND REPLACEMENT OPERATION TO BE PERFORMED DIRECTLY ABOVE A COMED LINE SHALL BE CLOSELY COORDINATED WITH THAT UTILITY. CDOT AND COMED REPRESENTATIVES SHALL BE PRESENT DURING THE PERFORMANCE OF THIS WORK.

10. USE EXTREME CAUTION AND HAND DIG WHEN NECESSARY IN CLOSE PROXIMITY TO PEOPLES ENERGY FACILITIES.

11. WHEN EXISTING DRAINAGE FACILITIES ARE DISTURBED, THE CONTRACTOR SHALL PROVIDE AND MAINTAIN TEMPORARY CONNECTIONS AND OUTLETS FOR ALL DRAINS, SEWERS AND CATCH BASINS. THE CONTRACTOR SHALL PROVIDE FACILITIES TO TAKE IN ALL STORM WATER RECEIVED BY THESE DRAINS AND SEWERS AND DISCHARGE THE SAME. THE CONTRACTOR SHALL PROVIDE AND MAINTAIN AN EFFICIENT PUMP SYSTEM, IF NECESSARY, AND TEMPORARY OUTLET. PUMPING SHALL ENTER A SETTLING BASIN SYSTEM, APPROVED BY THE COMMISSIONER, BEFORE PASSING INTO THE EXISTING DRAINAGE SYSTEM. THE WORK IS INCLUDED IN THE COST OF CAST-IN-PLACE REINFORCED CONCRETE END SECTIONS 72".

12. THE CONTRACTOR SHALL MAINTAIN THE SURFACE DRAINAGE OF THE ROAD DURING CONSTRUCTION UNTIL THE CITY ACCEPTS MAINTENANCE OF THE PROJECT.

13. NOT ALL DRAINAGE CONNECTIONS TO EXISTING AND PROPOSED SEWERS ARE SHOWN. CONTRACTOR MUST VERIFY AND RECONNECT ALL LIVE DRAINS THAT ARE DISTURBED. MINIMUM PIPE SLOPES ARE 1.0% UNLESS OTHERWISE NOTED. EXISTING LATERALS TO BE REUSED MUST BE RODDED AND FLUSHED IN THE PRESENCE OF THE SEWER INSPECTOR. A NEW CONNECTION TO THE MAIN SEWER IS REQUIRED IF THE EXISTING LATERAL IS NOT APPROVED BY THE INSPECTOR. THE COST OF THE CONNECTION SHALL BE INCLUDED IN THE COST OF THE LATERAL SEWERS.

14. THE CONTRACTOR MUST MOVE CATCH BASIN FRAMES AND LIDS DESIGNATED FOR REUSE BY THE COMMISSIONER TO THE LOCATIONS OF THE CATCH BASIN ON WHICH THEY ARE TO BE PLACED. THE COST OF MOVING AND HANDLING OF THE OLD CASTINGS AND THE SETTING OF ANY REUSABLE FRAMES AND LIDS SHALL BE INCLUDED IN THE CONTRACT UNIT PRICE FOR THE CONSTRUCTION OR ADJUSTMENT OF SUCH MANHOLES, CATCH BASIN OR INLETS. THE CONTRACTOR MUST DELIVER UNUSABLE FRAMES AND LIDS TO THE CITY AT A FACILITY DESIGNATED BY THE COMMISSIONER. A RECEIPT FOR THE DELIVERY OF THE FRAMES AND LIDS MUST BE GIVEN TO THE COMMISSIONER.

15. WHERE SECTION OR SUBSECTION MONUMENT OR BENCH MARKS ARE ENCOUNTERED, THE COMMISSIONER MUST BE NOTIFIED BEFORE SUCH MONUMENTS OR BENCH MARKS ARE REMOVED. THE CONTRACTOR MUST PROTECT AND CAREFULLY PRESERVE PROPERTY MARKERS AND MONUMENTS UNTIL THE COMMISSIONER HAS WITNESSED OR OTHERWISE REFERENCED THEIR LOCATION. MONUMENTS THAT MUST BE DISTURBED TO PERFORM THE WORK SHOWN IN THE PLANS SHALL BE REPLACED BY THE CONTRACTOR, AND NEW HORIZONTAL AND VERTICAL COORDINATES TURNED OVER TO THE COMMISSIONER. ALL COSTS INCLUDED WITHIN THE ITEMS OF WORK REQUIRING MONUMENT REPLACEMENT.

16. TRENCH BACKFILL AND BEDDING MATERIAL SHALL BE FURNISHED IN ACCORDANCE WITH SECTION 208 OF THE STANDARD SPECIFICATIONS. EACH LIFT SHALL BE PLACED AND COMPACTED IN ACCORDANCE WITH METHOD 3 OR ARTICLE 550.07 OF THE STANDARD SPECIFICATIONS, UNLESS OTHERWISE APPROVED BY THE COMMISSIONER.

17. MANHOLES, CATCH BASINS, AND INLETS MUST BE PROTECTED FROM THE ENTRY OR ASPHALT/DEBRIS INTO THE SEWER SYSTEM DURING CONSTRUCTION. THE CONTRACTOR SHALL MARK LOCATIONS OF ALL SEWER STRUCTURES ON THE SIDEWALK BEFORE STARTING PAVEMENT REMOVAL/REPLACEMENT. ADJUSTMENT OF FRAMES AND LIDS OF SEWER STRUCTURES MUST BE COMPLETED PRIOR TO STREET RECONSTRUCTION/ RESURFACING. THIS WORK IS CONSIDERED INCIDENTAL TO THE CONTRACT UNIT PRICE FOR CATCH BASINS TO BE ADJUSTED OR MANHOLES TO BE ADJUSTED.

18. IN CASE OF ANY DAMAGE TO THE CITY'S SEWER SYSTEM, PRIVATE AND PUBLIC DRAIN CONNECTIONS, THE CONTRACTOR SHALL CONTACT THE DEPARTMENT OF WATER MANAGEMENT IMMEDIATELY AT (312)747-8117 OR (312) 747-7893. THE CONTRACTOR SHALL AT HIS/HER OWN EXPENSE, REPLACE THE AFFECTED SEWERS, DRAIN CONNECTIONS, AND SEWER STRUCTURES AS NECESSARY. THE SEWER FLOW MUST BE MAINTAINED AT ALL TIMES.

19. THE CONTRACTOR SHALL SAWCUT A MINIMUM DEPTH OF ONE AND A HALF INCHES (1-1/2") WITH A CONCRETE SAWING MACHINE, TO PREVENT THE SURFACE FROM SPALLING WHEN THE SURFACE COURSE AND THE BASE COURSE ARE BROKEN. THE WORK SHALL BE DONE IN SUCH A MANNER THAT A STRAIGHT JOINT IS SECURED. THE CONTRACTOR SHALL SAWCUT THE PAVEMENT FULL DEPTH FOR PATCHES, AROUND STRUCTURES, AND FOR FULL DEPTH REMOVALS. AT CONCRETE CURB AND GUTTER, CONTRACTOR SHALL SAWCUT TO THE BASE OF THE CURB AND GUTTER. ALL SAWCUTTING REQUIRED WHETHER OR NOT SPECIFIED ON THE PLANS SHALL BE CONSIDERED INCIDENTAL TO THE ADJACENT REMOVAL ITEMS. THE CONTRACTOR MUST EXERCISE CAUTION WHEN SAWCUTTING OR REMOVING PAVEMENT AS TO NOT DAMAGE EXISTING WATERPROOFING, STRUCTURAL SLABS, OR ACTIVE TRAFFIC DETECTOR LOOPS. ANY DAMAGE TO THESE ITEMS CAUSED BY THE CONTRACTOR MUST BE REPAIRED TO THE COMMISSIONER'S SATISFACTION AT THE CONTRACTOR'S EXPENSE.

20. THE CONTRACTOR SHALL PERFORM VERTICAL ADJUSTMENT OF FRAMES AND LIDS OF WATER VALVE BASINS TO MATCH PAVEMENT ELEVATIONS WITHIN THE PROPOSED IMPROVEMENT LIMITS. FINAL PAYMENT OF THIS WORK SHALL NOT BE MADE UNTIL CHICAGO DEPARTMENT OF WATER MANAGEMENT HAS INSPECTED AND FOUND ITS FACILITY ACCEPTABLE.

21. JOINTS IN P.C.C. BASE COURSE MUST BE PROLONGATIONS OF JOINTS IN THE ADJACENT EXISTING CONCRETE CURB, CURB AND GUTTER, AND BASE COURSE. CONSTRUCT BOX OUTS IN P.C.C. BASE COURSE, IF REQUIRED, IN ACCORDANCE WITH THE CITY OF CHICAGO STANDARD BOX OUT DETAIL. NO ADDITIONAL COMPENSATION WILL BE MADE FOR BASE COURSE BOX OUTS. ALL HIGH-EARLY STRENGTH PORTLAND CEMENT CONCRETE MUST ACHIEVE A MINIMUM COMPRESSIVE STRENGTH OF 3500 PSI WITHIN 3 DAYS OF PLACEMENT.

22. WHEN THE PAVEMENT CONSTRUCTED IS PORTLAND CEMENT CONCRETE BASE COURSE OR PORTLAND CEMENT CONCRETE PAVEMENT, IT SHALL NOT BE OPENED TO TRAFFIC, INCLUDING CONSTRUCTION TRAFFIC, UNTIL AFTER THE SPECIFIED CURING PERIOD AS DEFINED IN ARTICLE 701.17(c) OF THE STANDARD SPECIFICATIONS AND UNTIL THE JOINTS HAVE BEEN SEALED.

23. THE CONTRACTOR SHALL CHECK THE ELEVATION AT THE PROPERTY LINE BEFORE SETTING THE TOP OF CURB ELEVATION AND, IF NECESSARY, SHALL ALTER THE CURB EXPOSURE AND/OR GUTTER ELEVATION TO MEET THE ADJACENT PROPERTY LINE ELEVATION TO THE SATISFACTION OF THE COMMISSIONER.

24. ALL WORK MUST CONFORM TO THE MOST CURRENT CITY OF CHICAGO STANDARDS FOR CONSTRUCTION IN COMPLIANCE WITH THE AMERICANS WITH DISABILITIES ACT, (ADA) AVAILABLE ON THE CITY OF CHICAGO WEBSITE.

25. THE ENTIRE AREA WHICH IS TO RECEIVE 'BITUMINOUS MATERIALS (TACK COAT)' SHALL BE SWEPT CLEAN BEFORE THE MATERIAL APPLICATION. SWEEPINGS SHALL NOT BE DEPOSITED IN THE GUTTER OR ON THE CURB, PARKWAY, OR SIDEWALK, BUT SHALL BE PICKED UP AND DISPOSED OF PROPERLY BEYOND THE LIMITS OF THE PROJECT ON THE SAME DAY THAT SWEEPING IS DONE. THIS WORK SHALL BE CONSIDERED INCIDENTAL TO BITUMINOUS MATERIALS (TACK COAT).

26. THE CONTRACTOR SHALL SUBMIT DETAILED PLANS, PROCEDURES, AND SEQUENCES OF PROPOSED RECONSTRUCTION WORK TO COMMISSIONER FOR APPROVAL PRIOR TO STARTING ANY OF THIS WORK. THE CONTRACTOR SHALL BE RESPONSIBLE FOR ALL METHODS AND PROCEDURES NECESSARY TO ACHIEVE THE PLAN DETAILS. ALL COSTS SHALL BE INCIDENTAL TO RELATED CONTRACT WORK.

27. THE CONTRACTOR SHALL OBTAIN ALL NECESSARY PERMITS FROM THE CITY OF CHICAGO, THE STATE OF ILLINOIS, US COAST GUARD AND OTHER JURISDICTIONAL AGENCIES PRIOR TO COMMENCING CONSTRUCTION. THE COST SHALL BE CONSIDERED INCIDENTAL TO THE CONTRACT.

28. LEVELING BINDER WILL BE USED WITH HOT-MIX ASPHALT BINDER AND SURFACE COURSES TO MEET FINISH ELEVATIONS, CONSTRUCT TEMPORARY RAMPS AROUND UTILITY STRUCTURES AFTER ADJUSTMENT AND FOR ALL OTHER MISCELLANEOUS HMA WORK DIRECTED BY THE COMMISSIONER. TEMPORARY HMA RAMPS MUST BE CONSTRUCTED AROUND ALL UTILITY STRUCTURES REGARDLESS OF SHAPE WHEN THE ROAD IS OPEN TO TRAFFIC PRIOR TO PLACEMENT OF BINDER AND/OR SURFACE COURSE. THE RAMPS MUST BE CONSTRUCTED IN ACCORDANCE WITH THE TEMPORARY HMA RAMP DETAILS AND REMOVED PRIOR TO PLACEMENT OF BINDER AND/OR SURFACE COURSE.

29. ALL AREAS WHERE LEVELING BINDER (HAND METHOD), N70 IS TO BE PLACED MUST BE CLEANED AND PRIMED WITH ONE COAT OF RC70 PRIMER OR OTHER PRIMER AS APPROVED BY THE COMMISSIONER. SEPARATE PAYMENT WILL NOT BE MADE FOR CLEANING, PRIMING AND REMOVAL OF THIS MATERIAL. THE COST OF THIS WORK MUST BE INCLUDED WITH THE BID PRICE OF LEVELING BINDER (HAND METHOD), N70.

30. UPON COMPLETION OF THE PROJECT, THE CONTRACTOR WILL PROVIDE ALL RECORD DOCUMENTS (AS DEFINED IN BOOK 1) WITH THE EXCEPTION OF CERTIFIED PAYROLL FOR ALL WORK. AS-BUILT PLANS MAY CONSIST OF MARK-UPS OF NOTES AND UPDATES TO THE ORIGINAL BID PLANS AND MUST BE STAMPED/SIGNED BY THE CONTRACTOR. ALL RECORD DOCUMENTS MUST BE PROVIDED TO THE CITY ELECTRONICALLY ON 3 CD/DVDs AND 3 FLASH DRIVES/USB DRIVES. THE FOLLOWING QUALITY CRITERIA SHOULD BE MET: 300 DPI MINIMUM, ALL TEXT MUST BE LEGIBLE, FULL SCANS ONLY AND CORRECTLY ORIENTED, PDF OR TIF FORMAT. EFFORT TO PREPARE RECORD DOCUMENTS WILL BE CONSIDERED INCLUDED IN THE COST OF EACH UTILIZED LINE ITEM.

31. ALL REFERENCES TO REINFORCEMENT, DOWEL BARS, AND TIE BARS IN PAVEMENT, CURB, GUTTER COMBINATION CURB AND CUTTER, MEDIANS, AND BARRIER WALL SHALL BE EPOXY COATED UNLESS OTHERWISE NOTED ON THE PLAN.

32. ANY RESURFACING WORK ADJACENT TO EXISTING ADA RAMPS MUST MAINTAIN ADA COMPLIANCE PER CDOT STANDARDS ACROSS THE LIP OF THE RAMP TO THE NEW PAVEMENT SURFACE OR BE REPAIRED BY THE CONTRACTOR AT NO COST TO THE CITY.

33. NEW PERMEABLE PAVER SHALL MATCH THE PERMEABLE PAVER INSTALLED IN THE ADJACENT AREA. SAMPLES MUST BE APPROVED BY THE COMISSIONER BEFORE THE WORK CAN TAKE PLACE.

34. THE CONTRACTOR WILL BE REQUIRED TO FURNISH AND INSTALL OR RELOCATE EXISTING SIGNAGE TO MARK SPECIALTY PARKING AND/OR LOADING ZONES. NEW SIGNAGE REQUIRED ON PROJECT CORRIDORS IS DETAILED ON THE PMK SHEETS, WITH THE FINAL CONFIGURATION OF RELOCATED PARKING, SPECIALTY PARKING, AND LOADING ZONES TO BE DETERMINED BY THE COMMISSIONER. THE PMK SHEETS IDENTIFY LOCATIONS OFF THE PROJECT CORRIDORS WHERE NEW SIGNAGE IS ANTICIPATED TO BE INSTALLED BY THE CONTRACTOR, WITH THE FINAL CONFIGURATION TO BE DETERMINED BY THE COMMISSIONER.

35. ALL CURB AND SIDEWALK DAMAGED BY CONTRACTOR SHALL BE REPLACED AT CONTRACTOR'S EXPENSE UNLESS OTHERWISE NOTED IN PLANS.

36. ALL AFFECTED PAVEMENT MARKINGS ON SIDE STREETS DURING CONSTRUCTION AND STAGING SHALL BE REPLACED AND CONSIDERED INCIDENTAL TO "TRAFFIC CONTROL AND PROTECTION (SPECIAL)."

37. A PERMIT FROM THE CITY DEPARTMENT OF WATER MANAGEMENT SHALL BE OBTAINED IN ADVANCE FOR ANY UNDERGROUND SEWER WORK INCLUDING ADJUSTMENT OF THE STRUCTURES, REMOVAL AND REPLACEMENT OF FRAMES AND LIDS, LINING AND INSPECTIONS BY LICENCED SEWER CONTRACTOR AT 333 S. STATE ST., SUITE 410, CHICAGO, IL 60604. ALL NECESSARY ADJUSTMEMT TO SEWER FACILITES, INCLUDING VERTICAL ADJUSTMENTS OF FRAMES AND LIDS SHALL BE PERFORMED PRIOR TO STREET RESURFACING.

38. CONTRACTOR SHALL COORDINATE WITH US COAST GUARD AT LEAST 30 DAYS PRIOR TO THE START OF WORK THAT TEMPORARILY ALTERS THE NAVIGATIONAL CLEARANCES OR PLACES EQUIPMENTS IN ANY OR OVER THE WATERWAY. CONTACT MR. SCOT STRIFFLER, COMMANDER, NINTH COAST GUARD DISTRICT, NINTH COAST GUARD DISTRICT, 1240 EAST NINTH STREET, CLEVELAND, OH 44199-2060, TELEPHONE 216-902-6087. OFFICE HOURS M-F 0630 TO 1500 EASTERN TIME (EXCEPT HOLIDAYS)

39. THE CONTRACTOR IS ADVISED THAT CERTAIN CONSTRUCTION OPERATIONS MAY REQUIRE COORDINATION WITH THE CITY OF CHICAGO AGENCIES PERFORMING WORK WITHIN THE LIMITS OF THE PROJECT. THE CONTRACTOR SHALL COORDINATE TO THE FULLEST EXTENT WITH THESE AGENCIES IN COMPLIANCE WITH APPLICABLE PORTION OF ARTICLE 105.07 OF THE SSRBC.

...\E5038-sht-gen_notes
3:11:36 PM
4/27/2018

DESIGN: SA				
DRAWN: SA				
CHECKED: RI				
APPROVED:				
DATE: 11/29/2017				
SCALE: NTS				
FILE:	NO.	BY	DATE	DESCRIPTION
	REVISIONS			

KEY PLAN:

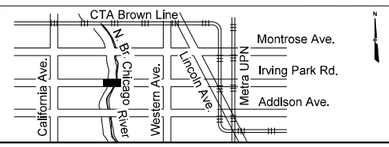

CDOT
CHICAGO DEPARTMENT OF TRANSPORTATION

EJM ENGINEERING, INC.
411 South Wells Street Suite 1000
Chicago, Illinois 60607

W. IRVING PARK ROAD AT NORTH BRANCH CHICAGO RIVER

GENERAL NOTES

PROJECT NO. E-5-038

DRAWING NO. GEN–2

CONTRACT NO. XXXXX

TOTAL SHEETS	SHEET NO.
184	4

40. CONTRACTOR MAY ONLY ACCESS THE TEMPORARY EASEMENT AREA AT THE NORTHEAST CORNER OF THE BRIDGE FROM IRVING PARK ROAD. ANY OTHER ACCESS TO THE AREA MUST BE COORDINATED BETWEEN THE CONTRACTOR AND THE PROPERTY OWNER.

41. EXISTING RAILING WITHIN THE TEMPORARY EASEMENT AREA MUST BE REMOVED, SECURELY STORED AND REINSTALLED IN THE SAME LOCATION UPON COMPLETION OF THE WORK. PAYMENT FOR THIS WORK WILL BE CONSIDERED INCIDENTAL TO THE MOBILIZATION LINE ITEM. ANY DAMAGE TO THE EXISTING FENCE WILL BE THE CONTRACTOR'S RESPONSIBILITY TO REPAIR TO THE OWNER'S SATISFACTION, AT NO ADDITIONAL EXPENSE TO THE PROJECT.

42. ANY DAMAGE TO THE EXISTING LANDSCAPING WITHIN THE TEMPORARY EASEMENT AREA BY THE CONTRACTOR MUST BE RESTORED IN-KIND UPON COMPLETION OF USE OF THE AREA TO THE OWNER'S SATISFACTION, AT NO ADDITIONAL COST TO THE PROJECT.

43. THE LANDSCAPED MEDIAN IRRIGATION CONTROLLER AND RPZ ARE TO BE SALVAGED AND TRANSFERRED TO A CDOT REPRESENTATIVE. NOTIFY THE RESIDENT ENGINEER AT LEAST SEVEN DAYS IN ADVANCE OF THE MEDIAN WORK TO COORDINATE THE TRANSFER OF EQUIPMENT. THIS WORK AND COORDINATION WILL BE CONSIDERED INCIDENTAL TO THE MEDIAN REMOVAL.

44. CONTRACTOR MUST PROVIDE A MINIMUM OF 14 DAYS NOTICE OF BEGINNING THE MEDIAN WORK AND ALLOW CDOT ACCESS TO SALVAGE ANY DESIRED PLANT MATERIAL.

45. CONTRACTOR TO COORDINATE WITH THE CHICAGO DEPARTMENT OF WATER MANAGEMENT FOR THE WATER SERVICE SHUTDOWN BEFORE BEGINNING DEMOLITION OF THE MEDIAN PLANTER AND IRRIGATION SYSTEM.

46. THE GENERAL CONTRACTOR IS REQUIRED TO HIRE AN ENVIRONMENTAL FIRM WITH AT LEAST FIVE(5) DOCUMENTED LEAKING UNDERGROUND STORAGE TANK CLEANUPS OR THAT IS PRE-QUALIFIED IN HAZARDOUS WASTE BY THE ILLINOIS DEPARTMENT OF TRANSPORTATION TO REMEDIATE THE SOIL CONTAMINATION AND MONITOR FOR WORKER PROTECTION.

47. CONTRACTOR SHALL REMOVE NATURE TRAIL ALONG THE RIVER AT HORNER PARK WITHIN THE LIMITS DETERMINED BY THE ENGINEER. THIS WORK SHALL BE INCIDENTAL TO TRAFFIC CONTROL AND PROTECTION, (SPECIAL).

48. THE PROJECT LOCATION IS IN CLOSE PROXIMITY TO WRIGLEY FIELD. CONTRACTOR SHALL COORDINATE TRAFFIC STAGE CHANGES AND INDIVIDUAL LANE CLOSURE IN ADVANCE TO ENSURE THAT TRAFFIC IS NOT DISRUPTED DURING EVENTS AT WRIGLEY FIELD. THIS WORK SHALL BE CONSIDERED INCLUDED IN THE COST OF TRAFFIC CONTROL AND PROTECTION, (SPECIAL).

49. COMED WILL BE RELOCATING THEIR FACILITIES DURING THE TERM OF THIS CONTRACT. CONTRACTOR SHALL COORDINATE CONSTRUCTION ACTIVITIES WITH THE COMED CONSTRUCTION ACTIVITIES. CONTRACTOR SHALL CONTACT MICHELLE HO (MICHELLE.HO@COMED.COM) - TEL 773-509-3284 FOR COORDINATION. DESIGN PLANS FOR COMED WORK WILL BE PROVIDED DURING PRECONSTRUCTION MEETING.

50. **TO AVOID IMPACTS TO THE BANDED KILLIFISH AND DISTURBANCE DURING THE SPAWNING SEASON, NO INSTREAM WORK SHALL OCCUR FROM MAY 5th THROUGH JULY 15th OF ANY CALENDAR YEAR.**

51. STRICT ADHERENCE TO BEST MANAGEMENT PRACTICES FOR EROSION AND SEDIMENTATION CONTROL SHOULD BE USED TO MINIMIZE THE POSSIBILITY OF ANY ADVERSE IMPACTS TO THE CHICAGO RIVER.

52. COFFERDAMS SHALL BE DESIGNED AND SEALED BY AN ILLINOIS LICENSED STRUCTURAL ENGINEER. COFFERDAM DESIGNS MUST BE SUBMITTED TO AND APPROVED BY THE CITY BEFORE INSTALLATION CAN BEGIN.

53. PERMITS

THE CONTRACTOR SHALL BE RESPONSIBLE FOR OBTAINING ALL CONSTRUCTION PERMITS THAT MAY BE NECESSARY FOR ACCESS TO THE JOB SITE, FOR STORAGE OF MATERIALS AND EQUIPMENT AND FOR CONSTRUCTION OPERATION. THE COST OF COMPLYING WITH THE REQUIREMENTS OF THIS SECTION SHALL BE CONSIDERED INCLUDED IN THE COST OF MOBILIZATION.

IN ACCORDANCE WITH SECTION IX OF BOOK 1 AND ARTICLE 107.04 - PERMITS AND LICENSES, OF THE STANDARD SPECIFICATIONS FOR ROAD AND BRIDGE CONSTRUCTION DATED APRIL 1, 2016, THE CONTRACTOR SHALL PROCURE ALL PERMITS AND LICENSES, PAY ALL CHARGES AND FEES, AND GIVE ALL NOTICES NECESSARY AND INCIDENTAL TO THE DUE AND LAWFUL PROSECUTION OF THE WORK. THESE PERMITS MAY INCLUDE BUT ARE NOT LIMITED TO THE CHICAGO DEPARTMENT OF TRANSPORTATION'S PUBLIC RIGHT OF WAY PERMITS, OFFICE OF UNDERGROUND COORDINATION (OUC), THE CHICAGO PARK DISTRICT CONSTRUCTION ACCESS PERMIT, U.S. COAST GUARD AND OTHERS.

FOR THIS PROJECT, ALL WORK ON THE WEST SIDE OF THE CHICAGO RIVER, NORTH AND SOUTH OF IRVING PARK ROAD IS THE JURISDICTION OF THE CHICAGO PARK DISTRICT. ALL WORK WITHIN THESE AREAS REQUIRES AN ACCESS PERMIT FROM THE CHICAGO PARK DISTRICT DEPARTMENT OF PLANNING AND CONSTRUCTION. THE PERMIT APPLICATION, TERMS AND CONDITIONS AND INSURANCE REQUIREMENTS CAN BE OBTAINED AT THE PARK DISTRICT'S WEBSITE: HTTP://WWW.CHICAGOPARKDISTRICT.COM/PERMITS-AND-RENTALS/CONSTRUCTION-ACCESS-PERMIT/.

CDOT'S PUBLIC RIGHT OF WAY PERMIT OFFICE IS RESPONSIBLE FOR ISSUING PERMITS FOR THE USE OR WORK IN THE PUBLIC WAY.

THE CDOT OFFICE OF UNDERGROUND COORDINATION (OUC) IS RESPONSIBLE FOR ALL REQUESTS REGARDING EXISTING UTILITY INFORMATION AND THE REVIEW/APPROVAL OF CONSTRUCTION WORK IN OR ADJACENT TO THE PUBLIC WAY. THIS ALSO INCLUDES LARGE PROJECTS WITH DEEP EXCAVATIONS AND PENETRATIONS, SUCH AS FOUNDATIONS (PILES, CAISSON, ETC.), EARTH RETENTION SYSTEMS OR MAJOR PIPING INSTALLATIONS. THE WORK IN THIS CONTRACT SHALL FOLLOW THE OFFICE OF UNDERGROUND COORDINATION (OUC) SUBMITTAL GUIDELINES AND PROCEDURES OUTLINED IN SECTION 3.3 OF THE CHICAGO DEPARTMENT OF TRANSPORTATION (CDOT) "RULES AND REGULATION FOR CONSTRUCTION IN THE PUBLIC WAY" MANUAL IN EFFECT ON THE DATE OF INVITATION OF BIDS.

THE NORTH COOK COUNTY SOIL AND WATER CONSERVATION DISTRICT (SWCD) IS RESPONSIBLE FOR REVIEWING THE SOIL EROSION AND SEDIMENT CONTROL (SESC) PLAN. THE CONTRACTOR SHALL SUBMIT FOR REVIEW AND APPROVAL AN SESC PLAN TO THE SWCD. STRICT ADHERENCE TO BEST MANAGEMENT PRACTICES FOR SOIL EROSION AND SEDIMENT CONTROL SHALL BE USED BY THE CONTRACTOR TO MINIMIZE THE POSSIBILITY OF ANY ADVERSE IMPACT TO THE CHICAGO RIVER, LAKE MICHIGAN AND THE VICINITY LISTED SPECIES, WHICH INCLUDE BUT IS NOT LIMITED TO THE MUDPUPPY. THE CONTRACTOR IS RESPONSIBLE FOR DETERMINING WHICH BEST MANAGEMENT PRACTICES WILL BE UTILIZED DURING CONSTRUCTION FOR SOIL EROSION AND SEDIMENT CONTROL. BEST MANAGEMENT PRACTICES SHALL BE LISTED IN THE SESC PLAN. ADDITIONAL INFORMATION ON BEST MANAGEMENT PRACTICES CAN BE FOUND ON THE CHAPTER 41 OF THE IDOT BUREAU OF DESIGN AND ENVIRONMENT MANUAL AND THE ILLINOIS URBAN MANUAL. WORK MAY NOT START UNTIL THE SESC PLAN IS APPROVED. ADDITIONAL INFORMATION AND GUIDANCE ON SUBMITTING THE SESC PLAN CAN BE OBTAINED AT THE SWCD WEBSITE: HTTP://WWW.NORTHCOOKSWCD.ORG/SESC.HTM.

THE CONTRACTOR MAY NOT START WORK ON ANY ELEMENT OF WORK REQUIRING A CITY OF CHICAGO, CHICAGO PARK DISTRICT OR ANY OTHER PERMIT UNTIL SUCH PERMIT HAS BEEN RECEIVED. MUST ALSO BE SUBMITTED TO THE NINTH COAST GUARD DISTRICT OFFICE AT THE CONCLUSION OF THE PROJECT.

ALL COSTS RELATED TO THE PERMIT REQUIREMENTS WILL BE INCLUDED IN THE COST OF MOBILIZATION AND NO REQUEST FOR ADDITIONAL TIME WILL BE CONSIDERED FOR FAILURE TO ALLOW ADEQUATE TIME TO RECEIVE THE REQUIRED PERMITS.

...\E5038-sht-gen_notes-1.dgn
4/30/2018 9:12:43 AM

DESIGN: SA				
DRAWN: SA				
CHECKED: RI				
APPROVED:				
DATE: 11/29/2017				
SCALE: NTS				
FILE:	NO.	BY	DATE	DESCRIPTION
	REVISIONS			

KEY PLAN:

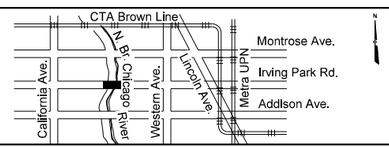

CDOT
CHICAGO DEPARTMENT OF TRANSPORTATION

EJM ENGINEERING, INC.
411 South Wells Street Suite 1000
Chicago, Illinois 60607

W. IRVING PARK ROAD AT NORTH BRANCH CHICAGO RIVER

GENERAL NOTES

PROJECT NO. E-5-038
DRAWING NO. GEN–3
CONTRACT NO. XXXXX

TOTAL SHEETS	SHEET NO.
184	5

ITEM NO.	CODE NO.	ITEM	UNIT	TOTAL QUANTITY
1	CDOT2010020	TREE PROTECTION	FOOT	1,300
2	20100210	TREE REMOVAL (OVER 15 UNITS DIAMETER)	UNIT	131
3	20100110	TREE REMOVAL (6 TO 15 UNITS DIAMETER)	UNIT	762
4	20200100	EARTH EXCAVATION	CU YD	2,813
5	20201200	REMOVAL AND DISPOSAL OF UNSUITABLE MATERIAL	CU YD	2,100
6	20400800	FURNISHED EXCAVATION	CU YD	701
7	21001000	GEOTECHNICAL FABRIC FOR GROUND STABILIZATION	SQ YD	1,264
8	CDOT2110010	PULVERIZED TOPSOIL MIX	CU YD	11
9	X2110100	TOPSOIL FURNISH AND PLACE, SPECIAL	CU YD	50
10	X2111100	TOPSOIL EXCAVATION AND PLACEMENT , SPECIAL	CU YD	510
11	20101400	NITROGEN FERTILIZER NUTRIENT	POUND	5
12	20101600	POTASSIUM FERTILIZER NUTRIENT	POUND	5
13	20101700	SUPPLEMENTAL WATERING	UNIT	1
14	25200110	SODDING, SALT TOLERANT	SQ YD	69

ITEM NO.	CODE NO.	ITEM	UNIT	TOTAL QUANTITY
15	CDOT2530020	PARKWAY AND TREEPIT TREES	EACH	3
16	28000200	EARTH EXCAVATION FOR EROSION CONTROL	CU YD	225
17	28000250	TEMPORARY EROSION CONTROL SEEDING	POUND	79
18	28000305	TEMPORARY DITCH CHECKS	FOOT	33
19	28000400	PERIMETER EROSION BARRIER	FOOT	1,851
20	28000510	INLET FILTERS	EACH	30
21	28001000	AGGREGATE (EROSION CONTROL)	TON	3
22	28001100	TEMPORARY EROSION CONTROL BLANKET	SQ YD	4,550
23	28100109	STONE RIPRAP, CLASS A5	SQ YD	600
24	28200200	FILTER FABRIC	SQ YD	683
25	28500400	ARTICULATED BLOCK REVETMENT MAT	SQ YD	119
26	30300112	AGGREGATE SUBGRADE IMPROVEMENT 12''	SQ YD	1,130
27	CDOT3110020	STRUCTURAL SOIL	CU YD	12
28	CDOT3110010	SAND CUSHION, VARIABLE DEPTH	CU YD	74

...\E5038-sht-soq01.dgn
11/29/2017 1:35:57 PM

DESIGN:				
DRAWN:				
CHECKED:				
APPROVED: DF				
DATE: 11/29/2017				
SCALE:				
FILE:	NO.	BY	DATE	DESCRIPTION
	REVISIONS			

KEY PLAN:

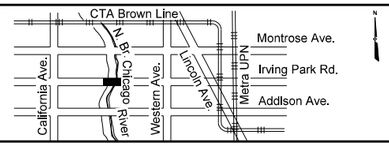

CDOT
CHICAGO DEPARTMENT OF TRANSPORTATION

BOWMAN, BARRETT & ASSOCIATES INC.
CONSULTING ENGINEERS
Chicago, Illinois
312.228.0100
www.bbandainc.com

W. IRVING PARK ROAD AT NORTH BRANCH CHICAGO RIVER

SUMMARY OF QUANTITES

PROJECT NO. E-5-038
DRAWING NO. SOQ-1
CONTRACT NO. XXXXX

TOTAL SHEETS	SHEET NO.
184	6

ITEM NO.	CODE NO.	ITEM	UNIT	TOTAL QUANTITY
29	35101800	AGGREGATE BASE COURSE, TYPE B 6''	SQ YD	1,264
30	CDOT3530100	TEMPORARY PAVEMENT	SQ YD	475
31	35300600	PORTLAND CEMENT CONCRETE BASE COURSE 11''	SQ YD	890
32	40600290	BITUMINOUS MATERIALS (TACK COAT)	POUND	2,479
33	40600535	LEVELING BINDER (HAND METHOD), N70	TON	35
34	40600827	POLYMERIZED LEVELING BINDER (MACHINE METHOD), IL-4.75, N50	TON	306
35	40600982	HOT-MIX ASPHALT SURFACE REMOVAL - BUTT JOINT	SQ YD	167
36	40600990	TEMPORARY RAMP	SQ YD	667
37	40603153	POLYMERIZED HOT-MIX ASPHALT SURFACE COURSE, STONE MATRIX ASPHALT, N80	TON	680
38	CDOT 4060105	HOT-MIX ASPHALT SURFACE COURSE, IL-9.5L, MIX ''C'', N30 (CDOT)	TON	432
39	42000080	PAVEMENT CONNECTOR (PCC) FOR BRIDGE APPROACH SLAB	SQ YD	222
40	CDOT4240010	PORTLAND CEMENT CONCRETE SIDEWALK, 5''	SQ FT	5,960
41	CDOT4240040	PORTLAND CEMENT CONCRETE ADA RAMP 8 INCH	SQ FT	25
42	44000100	PAVEMENT REMOVAL	SQ YD	179

ITEM NO.	CODE NO.	ITEM	UNIT	TOTAL QUANTITY
43	44000300	CURB REMOVAL	FOOT	749
44	44000500	COMBINATION CURB AND GUTTER REMOVAL	FOOT	901
45	44000600	SIDEWALK REMOVAL	SQ FT	6,585
46	44003100	MEDIAN REMOVAL	SQ FT	2,002
47	CDOT4400010	HOT-MIX ASPHALT SURFACE REMOVAL, VARIABLE DEPTH	SQ YD	5,837
48	44201298	DOWEL BARS 1 1/4''	EACH	62
49	44213200	SAW CUTS	FOOT	626
50	44213208	TIE BARS 1 1/4''	EACH	472
51	CDOT5010010	REMOVAL OF EXISTING STRUCTURES	L.SUM	1
52	CDOT5010030	CONCRETE REMOVAL	CU YD	30
53	50157300	PROTECTIVE SHIELD	SQ YD	1,225
54	50200100	STRUCTURE EXCAVATION	CU YD	95
55	50200300	COFFERDAM EXCAVATION	CU YD	493
56	50201101	COFFERDAM (TYPE 1) (LOCATION - 1)	EACH	1

...\E5038-sht-soq02.dgn
11/29/2017 1:35:59 PM

DESIGN:				
DRAWN:				
CHECKED:				
APPROVED: DF				
DATE: 11/29/2017				
SCALE:				
FILE:	NO.	BY	DATE	DESCRIPTION
	REVISIONS			

KEY PLAN:

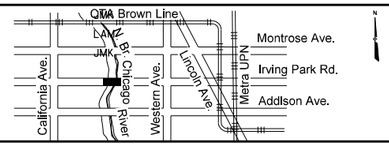

CDOT
CHICAGO DEPARTMENT OF TRANSPORTATION

BOWMAN, BARRETT & ASSOCIATES INC.
CONSULTING ENGINEERS
Chicago, Illinois
312.228.0100
www.bbandainc.com

W. IRVING PARK ROAD AT NORTH BRANCH CHICAGO RIVER

SUMMARY OF QUANTITES

PROJECT NO. E-5-038
DRAWING NO. SOQ-2
CONTRACT NO. XXXXX

TOTAL SHEETS	SHEET NO.
184	7

ITEM NO.	CODE NO.	ITEM	UNIT	TOTAL QUANTITY
57	50201102	COFFERDAM (TYPE 1) (LOCATION - 2)	EACH	1
58	50300260	BRIDGE DECK GROOVING	SQ YD	1,986
59	50300285	FORM LINER TEXTURED SURFACE	SQ FT	1,253
60	CDOT5030010	DRAINAGE SCUPPERS, DS-12	EACH	4
61	CDOT5030020	HIGH PERFORMANCE CONCRETE STRUCTURES	CU YD	1,626.1
62	CDOT5030030	HIGH PERFORMANCE CONCRETE SUPERSTRUCTURES	CU YD	951.4
63	CDOT5030070	LATEX CONCRETE OVERLAY FOR NEW BRIDGE DECK, 2-1/4 INCH	SQ YD	2,001
64	50500505	STUD SHEAR CONNECTORS	EACH	13,252
65	CDOT5050010	FURNISHING AND ERECTING STRUCTURAL STEEL	L.SUM	1
66	50800205	REINFORCEMENT BARS, EPOXY COATED	POUND	329,700
67	50800515	BAR SPLICERS	EACH	2,940
68	51500100	NAME PLATES	EACH	1
69	52000110	PREFORMED JOINT STRIP SEAL	FOOT	202
70	52100020	ELASTOMERIC BEARING ASSEMBLY, TYPE II	EACH	42

ITEM NO.	CODE NO.	ITEM	UNIT	TOTAL QUANTITY
71	52100505	ANCHOR BOLTS, 5/8''	EACH	28
72	52100530	ANCHOR BOLTS, 1 1/4''	EACH	84
73	52200015	PERMANENT SHEET PILING	SQ FT	11,680
74	52200100	FURNISHING SOLDIER PILES (HP SECTION)	FOOT	1,036
75	52200150	DRIVING SOLDIER PILES	FOOT	1,036
76	52200250	UNTREATED TIMBER LAGGING	SQ FT	928
77	52200800	SEGMENTAL CONCRETE BLOCK WALL	SQ FT	250
78	52200900	CONCRETE STRUCTURES (RETAINING WALL)	CU YD	27
79	54213657	PRECAST REINFORCED CONCRETE FLARED END SECTIONS 12''	EACH	1
80	54215472	CAST-IN-PLACE REINFORCED CONCRETE END SECTIONS 72''	EACH	1
81	54248510	CONCRETE COLLAR	CU YD	10
82	550A0050	STORM SEWERS, CLASS A, TYPE 1 12''	FOOT	97
83	56103300	DUCTILE IRON WATER MAIN 12''	FOOT	535
84	56400500	FIRE HYDRANTS TO BE REMOVED	EACH	3

...\E5038-sht-soq03.dgn
11/29/2017 1:36:02 PM

DESIGN:				
DRAWN:				
CHECKED:				
APPROVED: DF				
DATE: 11/29/2017				
SCALE:				
FILE:	NO.	BY	DATE	DESCRIPTION
	REVISIONS			

KEY PLAN:

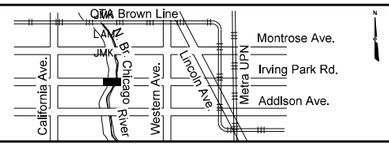

CDOT
CHICAGO DEPARTMENT OF TRANSPORTATION

BOWMAN, BARRETT & ASSOCIATES INC.
CONSULTING ENGINEERS
Chicago, Illinois
312.228.0100
www.bbandainc.com

W. IRVING PARK ROAD AT NORTH BRANCH CHICAGO RIVER

SUMMARY OF QUANTITES

PROJECT NO.	E-5-038
DRAWING NO.	SOQ-3
CONTRACT NO.	XXXXX

TOTAL SHEETS	SHEET NO.
184	8

ITEM NO.	CODE NO.	ITEM	UNIT	TOTAL QUANTITY
85	56400600	FIRE HYDRANTS	EACH	2
86	58700300	CONCRETE SEALER	SQ FT	14,825
87	CDOT5870010	PROTECTIVE CONCRETE SEALER	SQ YD	2,946
88	59100100	GEOCOMPOSITE WALL DRAIN	SQ YD	797
89	59300100	CONTROLLED LOW-STRENGTH MATERIAL	CU YD	34
90	60200905	CATCH BASINS, TYPE A, 4'-DIAMETER, TYPE 9 FRAME AND GRATE	EACH	1
91	60201005	CATCH BASINS, TYPE A, 4'-DIAMETER, TYPE 10 FRAME AND GRATE	EACH	1
92	60218400	MANHOLE TYPE A, 4' DIAMETER, TYPE 1 FRAME, CLOSED LID	EACH	1
93	60236700	INLETS, TYPE A, TYPE 10 FRAME AND GRATE	EACH	1
94	60250200	CATCHBASINS TO BE ADJUSTED	EACH	4
95	60255500	MANHOLES TO BE ADJUSTED	EACH	10
96	60265700	VALVE VAULTS TO BE ADJUSTED	EACH	5
97	60600605	CONCRETE CURB, TYPE B	FOOT	202
98	60602800	CONCRETE GUTTER, TYPE B	FOOT	451

ITEM NO.	CODE NO.	ITEM	UNIT	TOTAL QUANTITY
99	CDOT6060020	COMBINATION CONCRETE CURB AND GUTTER, TYPE B-V.12	FOOT	579
100	CDOT6640010	TEMPORARY CHAIN LINK FENCE WITH SCREENING, 6'	FOOT	1,192
101	CDOT6640030	RELOCATE TEMPORARY CHAIN LINK FENCE WITH SCREENING	FOOT	1,192
102	CDOT6700010	ENGINEER'S FIELD OFFICE	CAL MO	22
103	67100100	MOBILIZATION	LSUM	1
104	66900200	NON SPECIAL WASTE DISPOSAL	CU YD	1,500
105	66900205	SPECIAL WASTE DISPOSAL	CU YD	50
106	66900450	SPECIAL WASTE PLANS AND REPORTS	LSUM	1
107	66900530	SOIL DISPOSAL ANALYSIS	EACH	12
108	66900665	TCL SOIL ANALYSIS	EACH	12
109	70106800	CHANGEABLE MESSAGE SIGN	CAL MO	44
110	70300100	SHORT TERM PAVEMENT MARKING	FOOT	925
111	70300150	SHORT TERM PAVEMENT MARKING REMOVAL	SQ FT	305
112	70300220	TEMPORARY PAVEMENT MARKING - LINE 4"	FOOT	13,066

...\E5038-sht-soq04.dgn
11/29/2017 1:36:05 PM

DESIGN:				
DRAWN:				
CHECKED:				
APPROVED: DF				
DATE: 11/29/2017				
SCALE:				
FILE:	NO.	BY	DATE	DESCRIPTION
	REVISIONS			

KEY PLAN:

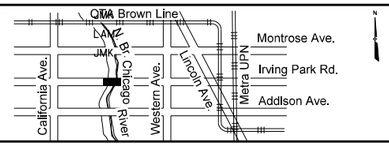

CDOT
CHICAGO DEPARTMENT OF TRANSPORTATION

BOWMAN, BARRETT & ASSOCIATES INC.
CONSULTING ENGINEERS
Chicago, Illinois
312.228.0100
www.bbandainc.com

W. IRVING PARK ROAD AT NORTH BRANCH CHICAGO RIVER

SUMMARY OF QUANTITES

PROJECT NO. E-5-038
DRAWING NO. SOQ-4
CONTRACT NO. XXXXX

TOTAL SHEETS	SHEET NO.
184	9

ITEM NO.	CODE NO.	ITEM	UNIT	TOTAL QUANTITY
113	70300260	TEMPORARY PAVEMENT MARKING - LINE 12''	FOOT	440
114	70400100	TEMPORARY CONCRETE BARRIER	FOOT	1,863
115	70400200	RELOCATE TEMPORARY CONCRETE BARRIER	FOOT	2,150
116	70600255	IMPACT ATTENUATORS, TEMPORARY (FULLY REDIRECTIVE, NARROW), TEST LEVEL 2	EACH	5
117	70600322	IMPACT ATTENUATORS, RELOCATE (FULLY REDIRECTIVE, NARROW), TEST LEVEL 2	EACH	6
118	73000100	WOOD SIGN SUPPORT	FOOT	27
119	78000600	THERMOPLASTIC PAVEMENT MARKING - LINE 12''	FOOT	579
120	78000200	THERMOPLASTIC PAVEMENT MARKING - LINE 4''	FOOT	5,299
121	78000400	THERMOPLASTIC PAVEMENT MARKING - LINE 6''	FOOT	270
122	78000650	THERMOPLASTIC PAVEMENT MARKING - LINE 24''	FOOT	43
123	78000100	THERMOPLASTIC PAVEMENT MARKING - LETTERS AND SYMBOLS	SQ FT	30
124	78008210	POLYUREA PAVEMENT MARKING TYPE I - LINE 4''	FOOT	1,089
125	78008230	POLYUREA PAVEMENT MARKING TYPE I - LINE 6''	FOOT	843
126	78008250	POLYUREA PAVEMENT MARKING TYPE I - LINE 12''	FOOT	153

ITEM NO.	CODE NO.	ITEM	UNIT	TOTAL QUANTITY
127	78200010	BARRIER WALL REFLECTOR, TYPE B	EACH	38
128	78300100	PAVEMENT MARKING REMOVAL	SQ FT	6,138
129	81028350	UNDERGROUND CONDUIT, PVC, 2'' DIA.	FOOT	225
130	81100200	CONDUIT ATTACHED TO STRUCTURE, 3/4'' DIA., GALVANIZED STEEL	FOOT	182
131	81300220	JUNCTION BOX, STAINLESS STEEL, ATTACHED TO STRUCTURE, 6'' X 6'' X 4''	EACH	6
132	81300550	JUNCTION BOX, STAINLESS STEEL, ATTACHED TO STRUCTURE, 12'' X 12'' X 6''	EACH	1
133	X0321809	PERMANENT GROUND ANCHOR	EACH	27
134	X0321963	MICRO-PILES	EACH	154
135	X0323360	WOODEN POLE REMOVAL	EACH	1
136	X0323432	MICROPILE LOAD TEST	EACH	4
137	X0323433	MICROPILE PROOF LOAD TEST	EACH	12
138	X0324044	EROSION CONTROL, TEMPORARY PIPE SLOPE DRAIN	EACH	2
139	X0327213	REMOVE TEMPORARY PIPE SLOPE DRAIN	EACH	2
140	X0327552	TREE GRATE REMOVAL	EACH	7

...\E5038-sht-soq05.dgn
11/29/2017 1:36:07 PM

DESIGN:				
DRAWN:				
CHECKED:				
APPROVED: DF				
DATE: 11/29/2017				
SCALE:				
FILE:	NO.	BY	DATE	DESCRIPTION
	REVISIONS			

KEY PLAN:

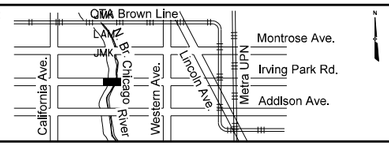

CDOT
CHICAGO DEPARTMENT OF TRANSPORTATION

BOWMAN, BARRETT & ASSOCIATES INC.
CONSULTING ENGINEERS
Chicago, Illinois
312.228.0100
www.bbandainc.com

W. IRVING PARK ROAD AT NORTH BRANCH CHICAGO RIVER

SUMMARY OF QUANTITES

PROJECT NO. E-5-038
DRAWING NO. SOQ-5
CONTRACT NO. XXXXX

TOTAL SHEETS	SHEET NO.
184	10

ITEM NO.	CODE NO.	ITEM	UNIT	TOTAL QUANTITY
141	X0327691	GRATING FOR CONCRETE HEADWALL NO 1	EACH	1
142	X2020502	BRACED EXCAVATION	CU YD	2,075
143	X2200018	ORNAMENTAL FENCE	FOOT	630
144	X5090850	ORNAMENTAL RAILING	FOOT	653
145	X5860110	GRANULAR BACKFILL FOR STRUCTURES	CU YD	1,640
146	X6061460	PAVED DITCH (SPECIAL)	FOOT	22
147	X6640555	CHAIN LINK FENCE, 5' (SPECIAL)	FOOT	197
148	X7010216	TRAFFIC CONTROL AND PROTECTION, (SPECIAL)	LSUM	1
149	X8140105	HANDHOLE (SPECIAL)	EACH	1
150	Z0007124	STEEL RAILING (SPECIAL)	FOOT	795
151	Z0007126	HANDRAIL REMOVAL	FOOT	133
152	Z0007430	TEMPORARY SIDEWALK	SQ FT	963
153	Z0012754	STRUCTURAL REPAIR OF CONCRETE (DEPTH EQUAL TO OR LESS THAN 5 INCHES)	SQ FT	27
154	Z0013797	STABILIZED CONSTRUCTION ENTRANCE	SQ YD	224
155	Z0013798	CONSTRUCTION LAYOUT	LSUM	1
156	Z0030850	TEMPORARY INFORMATION SIGNING	SQ FT	52
157	Z0046304	PIPE UNDERDRAINS FOR STRUCTURES 4''	FOOT	670
158	••••••••	SUBBASE GRANULAR MATERIAL, NON-LIMESTONE	CU YD	5
159	••••••••	PERMEABLE PAVERS	SQ FT	264
160	••••••••	PERMEABLE PAVER REMOVAL	SQ FT	923
161	••••••••	GRADING AND SHAPING SHARED USE PATH	UNIT	8
162	••••••••	MAINTENANCE OF ACCESS TO ABUTTING PROPERTIES	LSUM	1
163	••••••••	CAST IRON TREE GRATES, GRATE FRAMES, AND THICKENED SLAB, 5' BY 10'	EACH	3
164	••••••••	REMOVAL OF EXISTING WOODCHIP TRAIL	SQ FT	2,250
165	••••••••	MULCH TRAIL	FOOT	510
166	••••••••	REMOVE EXISTING SIGN PANEL AND SALVAGE	EACH	12
167	••••••••	REMOVE EXISTING SIGN PANEL AND POLE ASSEMBLY, FROM SIDEWALK, AND SALVAGE	EACH	2
168	••••••••	FURNISH SIGN PANEL, TYPE 1, REFLECTIVE, TYPE A, SINGLE-SIDED	SQ FT	56

...\E5038-sht-soq06.dgn
11/29/2017 1:36:10 PM

DESIGN:				
DRAWN:				
CHECKED:				
APPROVED: DF				
DATE: 11/29/2017				
SCALE:				
FILE:	NO.	BY	DATE	DESCRIPTION
	REVISIONS			

KEY PLAN:

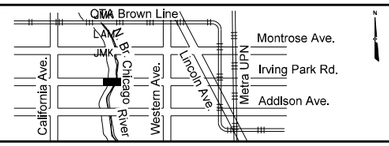

CDOT
CHICAGO DEPARTMENT OF TRANSPORTATION

BOWMAN, BARRETT & ASSOCIATES INC.
CONSULTING ENGINEERS
Chicago, Illinois
312.228.0100
www.bbandainc.com

W. IRVING PARK ROAD AT NORTH BRANCH CHICAGO RIVER

SUMMARY OF QUANTITES

PROJECT NO.	E-5-038
DRAWING NO.	SOQ-6
CONTRACT NO.	XXXXX

ITEM NO.	CODE NO.	ITEM	UNIT	TOTAL QUANTITY
169	••••••••	FURNISH SIGN PANEL, TYPE 1, REFLECTIVE, TYPE A, DOUBLE-SIDED	SQ FT	14
170	••••••••	FURNISH AND INSTALL PROJECT SIGN, TYPE A	EACH	2
171	••••••••	FURNISH AND INSTALL PROJECT SIGN, TYPE B	EACH	2
172	••••••••	FURNISH AND INSTALL PROJECT SIGN, BANNER	EACH	1
173	••••••••	FURNISH AND INSTALL POLE, DRILL METHOD	EACH	9
174	••••••••	INSTALL SIGN PANEL TY. 1, CENTER MOUNT ON SIGN POLE	EACH	13
175	••••••••	INSTALL SIGN PANEL TY. 1, FLAG MOUNT ON SIGN POLE	EACH	6
176	••••••••	TRENCH AND BACKFILL WITH SCREENINGS	FOOT	888
177	••••••••	ELECTRICAL HANDHOLE, 30", 24" FRAME AND LID	EACH	2
178	••••••••	DRILL EXISTING MANHOLE OR HANDHOLE	EACH	20
179	••••••••	GALVANIZED STEEL CONDUIT ATTACHED TO STRUCTURE 2"	FOOT	874
180	••••••••	PVC CONDUIT IN TRENCH 2"	FOOT	1,279
181	••••••••	GALVANIZED STEEL CONDUIT IN TRENCH 2"	FOOT	15
182	••••••••	GALVANIZED STEEL CONDUIT IN TRENCH 3"	FOOT	15

ITEM NO.	CODE NO.	ITEM	UNIT	TOTAL QUANTITY
183	••••••••	GALVANIZED STEEL CONDUIT ATTACHED TO STRUCTURE 4"	FOOT	580
184	••••••••	CONCRETE FOUNDATION, 28" DIAMETER, 1 1/4" ANCHOR RODS, 15" BOLT CIRCLE, 7 FEET	EACH	6
185	••••••••	CONCRETE FOUNDATION, 30" DIAMETER, 1" ANCHOR RODS, 15" BOLT CIRCLE, 7 FEET	EACH	2
186	••••••••	ELBOW, CONDUIT, STEEL, 2" ADJACENT TO EMBEDDED POLE/STRUCTURE	EACH	3
187	••••••••	CONDUIT RISER UP POLE 2"	EACH	3
188	••••••••	ELECTRIC CABLE IN CONDUIT, 1/C NO. 6	FOOT	1,154
189	••••••••	ELECTRIC CABLE IN CONDUIT, TRIPLEX, 2 1/C NO. 6, 1 1/C NO. 8	FOOT	1,340
190	••••••••	CHICAGO 2000 STREET LIGHT UNIT	EACH	8
191	••••••••	EXTENDED LOOP LIGHT UNIT	EACH	2
192	••••••••	LUMINAIRE, CHICAGO 2000 PENDANT, LED, TYPE III	EACH	11
193	••••••••	LUMINAIRE, ORNAMENTAL, ACORN, LED, TYPE III	EACH	4
194	••••••••	MAINTAIN EXISTING LIGHTING SYSTEM	LSUM	1
195	••••••••	MAINTENANCE OF EXISTING FIRE ALARM CABLE, AND DISCONNECTION AND RECONNECTION OF OF INTERCONNECT CABLE	LSUM	1
196	••••••••	REMOVE EXISTING STREET LIGHTING EQUIPMENT	LSUM	1

...\E5038-sht-soq07.dgn
11/29/2017 2:11:06 PM

DESIGN:				
DRAWN:				
CHECKED:				
APPROVED: DF				
DATE: 11/29/2017				
SCALE:				
FILE:	NO.	BY	DATE	DESCRIPTION
	REVISIONS			

KEY PLAN:

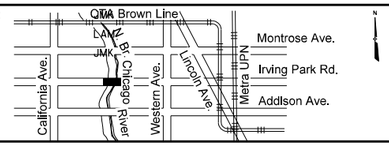

CDOT
CHICAGO DEPARTMENT OF TRANSPORTATION

BOWMAN, BARRETT & ASSOCIATES INC.
CONSULTING ENGINEERS
Chicago, Illinois
312.228.0100
www.bbandainc.com

W. IRVING PARK ROAD AT NORTH BRANCH CHICAGO RIVER

SUMMARY OF QUANTITES

PROJECT NO.	E-5-038
DRAWING NO.	SOQ-7
CONTRACT NO.	XXXXX

ITEM NO.	CODE NO.	ITEM	UNIT	TOTAL QUANTITY
197	••••••••	BREAKDOWN EXISTING HANDHOLE	EACH	1
198	••••••••	BREAKDOWN MANHOLE IN PARKWAY	EACH	1
199	••••••••	BREAKDOWN STREET LIGHT FOUNDATION	EACH	4
200	••••••••	TRENCH AND BACKFILL FOR ELECTRICAL WORK	FOOT	156
201	••••••••	ELECTRIC CABLE IN TRENCH, 600V (XLP-TYPE USE) 1/C NO. 6	FOOT	2,442
202	••••••••	ELECTRIC CABLE IN TRENCH, 600V (XLP-TYPE USE) 1/C NO. 8	FOOT	841
203	••••••••	ELECTRIC CABLE IN CONDUIT, 600V (XLP-TYPE USE) 1/C NO. 10	FOOT	817
204	••••••••	PATH LIGHT FIXTURE	EACH	5
205	••••••••	PATH UNDERPASS LUMINAIRE	EACH	6
206	••••••••	PATH LIGHT POLE	EACH	5
207	••••••••	CONTROLLER, UNDERPASS LIGHTING, WALL MOUNTED, 1 PHASE, 60 AMP	EACH	1
208	••••••••	SERVICE CONNECTION TO CECO LINE	EACH	1
209	••••••••	SERVICE INSTALLATION, 100 AMP	EACH	1
210	••••••••	SERVICE CABLE, 3/C NO. 2	FOOT	616

ITEM NO.	CODE NO.	ITEM	UNIT	TOTAL QUANTITY
211	••••••••	MONITORING OF EXISTING FACILITIES	LSUM	1
212	Z0076600	TRAINEES	HOUR	3,000

...\E5038-sht-soq08.dgn
11/29/2017 1:36:15 PM

DESIGN:				
DRAWN:				
CHECKED:				
APPROVED: DF				
DATE: 11/29/2017				
SCALE:				
FILE:	NO.	BY	DATE	DESCRIPTION
	REVISIONS			

KEY PLAN:

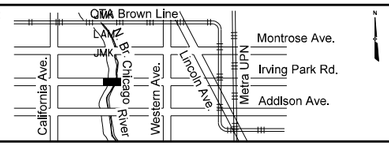

CDOT
CHICAGO DEPARTMENT OF TRANSPORTATION

BOWMAN, BARRETT & ASSOCIATES INC.
CONSULTING ENGINEERS
Chicago, Illinois
312.228.0100
www.bbandainc.com

W. IRVING PARK ROAD AT NORTH BRANCH CHICAGO RIVER

SUMMARY OF QUANTITES

PROJECT NO. E-5-038

DRAWING NO. SOQ–8

CONTRACT NO. XXXXX

TOTAL SHEETS	SHEET NO.
184	13

PROP. CURVE PR_PATH-1
PI STA. = 200+47.66
Δ = 17° 37′ 17″ (RT)
D = 76° 23′ 40″
R = 75.00′
T = 11.62′
L = 23.07′
E = 0.90′
P.C. STA. = 200+36.04
P.T. STA. = 200+59.10

PROP. CURVE PR_PATH-2
PI STA. = 203+13.95
Δ = 44° 11′ 41″ (LT)
D = 57° 17′ 45″
R = 100.00′
T = 40.60′
L = 77.13′
E = 7.93′
P.C. STA. = 202+73.35
P.T. STA. = 203+50.48

PROP. CURVE PR_PATH-3
PI STA. = 206+70.86
Δ = 35° 55′ 29″ (LT)
D = 76° 23′ 40″
R = 75.00′
T = 24.31′
L = 47.03′
E = 3.84′
P.C. STA. = 206+46.55
P.T. STA. = 206+93.57

DESIGN SPEED ON PATH CURVES = 18 MPH

MASTER STATIONING				
NAME	STATION TYPE	STATION	NORTHING	EASTING
IRVINGPARK	POT	92+00	4951.468	8818.159
	POT	106+00	4949.694	10218.157
PATH	POT	200+00.00	4606.276	9319.143
PR_PATH-1	PC	200+36.04	4638.487	9335.304
	PI	200+47.66	4648.877	9340.518
	PT	200+59.10	4657.202	9348.632
PR_PATH-2	PC	202+73.35	4810.621	9498.177
	PI	203+13.95	4839.694	9526.516
	PT	203+50.48	4880.295	9526.568
PR_PATH-3	PC	206+46.55	5176.357	9526.943
	PI	206+70.86	5200.671	9526.974
	PT	206+93.57	5220.379	9512.733
PATH	POT	208+50.00	5347.168	9421.113

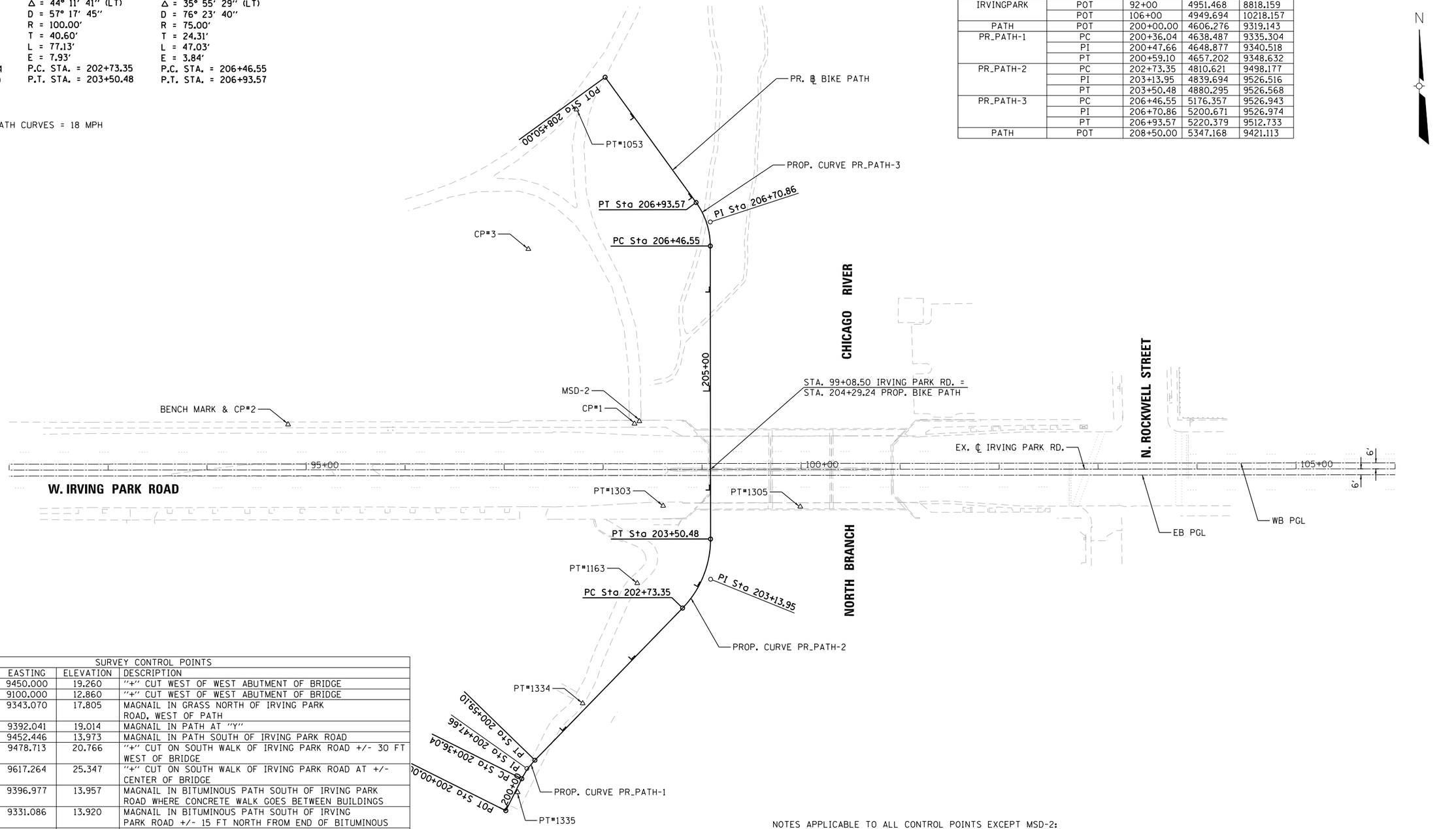

SURVEY CONTROL POINTS				
NAME	NORTHING	EASTING	ELEVATION	DESCRIPTION
CP#1	4997.000	9450.000	19.260	"+" CUT WEST OF WEST ABUTMENT OF BRIDGE
CP#2	4997.000	9100.000	12.860	"+" CUT WEST OF WEST ABUTMENT OF BRIDGE
CP#3	5173.517	9343.070	17.805	MAGNAIL IN GRASS NORTH OF IRVING PARK ROAD, WEST OF PATH
PT#1053	5314.566	9392.041	19.014	MAGNAIL IN PATH AT "Y"
PT#1163	4835.818	9452.446	13.973	MAGNAIL IN PATH SOUTH OF IRVING PARK ROAD
PT#1303	4913.917	9478.713	20.766	"+" CUT ON SOUTH WALK OF IRVING PARK ROAD +/- 30 FT WEST OF BRIDGE
PT#1305	4912.875	9617.264	25.347	"+" CUT ON SOUTH WALK OF IRVING PARK ROAD AT +/- CENTER OF BRIDGE
PT#1334	4714.525	9396.977	13.957	MAGNAIL IN BITUMINOUS PATH SOUTH OF IRVING PARK ROAD WHERE CONCRETE WALK GOES BETWEEN BUILDINGS
PT#1335	4624.901	9331.086	13.920	MAGNAIL IN BITUMINOUS PATH SOUTH OF IRVING PARK ROAD +/- 15 FT NORTH FROM END OF BITUMINOUS
MSD-2	4999.496	9454.913	19.618	INFORMATION PROVIDED BY USACE: METROPOLITAN SANITARY DISTRICT OF GREATER CHICAGO DISK SET IN CONCRETE SIDEWALK ON NORTH SIDE OF WEST IRVING PARK ROAD AT SOUTH END OF CONCRETE TRAIL OF HORNER PARK. COORDINATE ZONE: 1201, NORTHING: 1926519.64, EASTING: 1157854.75, DATUM: NAVD88, ELEVATION: 598.555

NOTES APPLICABLE TO ALL CONTROL POINTS EXCEPT MSD-2:
1: COORDINATE SYSTEM WAS ESTABLISHED BY OTHERS AND IS A LOCAL SYSTEM
2: THE TWO CONTROL POINTS ON NORTH SIDE OF IRVING PARK ROAD, EAST OF THE RIVER, HAVE BEEN DESTROYED BY CONSTRUCTION OF NEW SIDEWALKS
3: ELEVATIONS FOR THIS PROJECT IN CHICAGO CITY DATUM.

0 50 100 150
SCALE IN FEET

...\Cadd Sheets\E5038-sht-ali
11/29/2017 1:36:18 PM

DESIGN: BJD				
DRAWN: BJD				
CHECKED: SA				
APPROVED:				
DATE: 11/29/2017				
SCALE: 1" = 50'				
FILE:	NO.	BY	DATE	DESCRIPTION
	REVISIONS			

KEY PLAN:
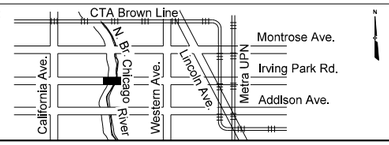

CDOT
CHICAGO DEPARTMENT OF TRANSPORTATION

EJM ENGINEERING, INC.
411 South Wells Street Suite 1000
Chicago, Illinois 60607

W. IRVING PARK ROAD AT NORTH BRANCH CHICAGO RIVER

ALIGNMENT AND TIES

PROJECT NO. E-5-038
DRAWING NO. ALI-1
CONTRACT NO. XXXXX

TOTAL SHEETS	SHEET NO.
184	14

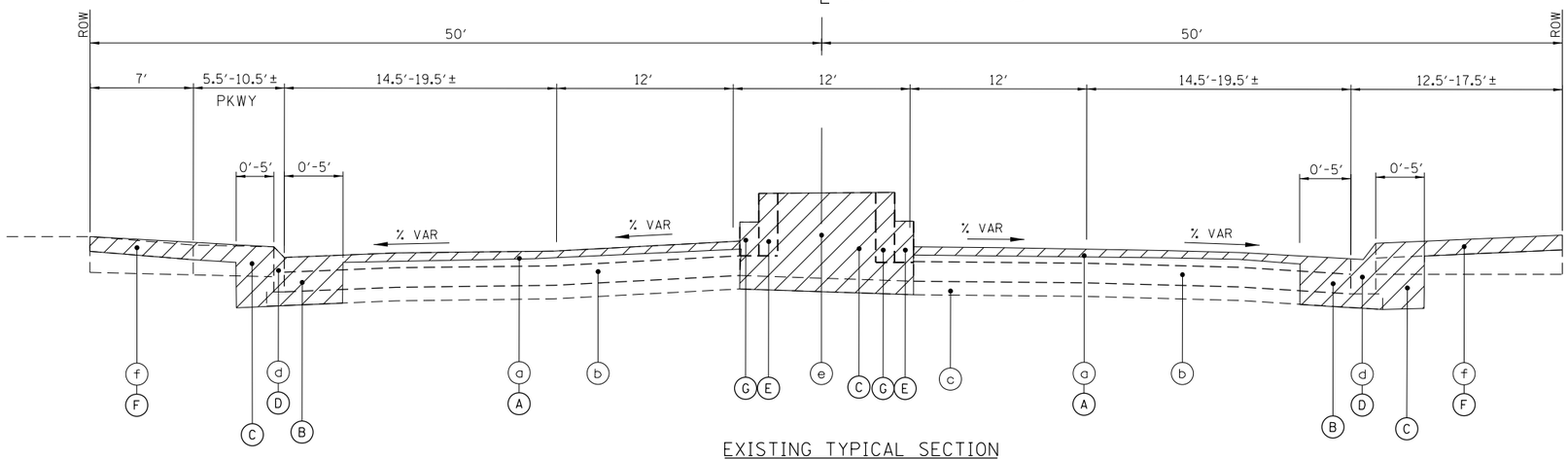

EXISTING TYPICAL SECTION

STA. 93+58 TO STA. 98+69.25
SEE ROADWAY PLAN FOR SIDEWALK, PAVEMENT AND CURB & GUTTER RECONSTRUCTION LIMITS

MIXTURE REQUIREMENTS

ITEM	AIR VOIDS	UNIT WEIGHT	THICKNESS
POLYMERIZED HOT-MIX ASPHALT SURFACE COURSE, STONE MATRIX ASPHALT, N80, IL 9.5MM THICKNESS	4% @ 80 GYR	112 LB/SY/IN	2″
POLYMERIZED LEVELING BINDER (MACHINE METHOD), IL-4.75, N50	4% @ 50 GYR	112 LB/SY/IN	1″ OR 3″
HOT-MIX ASPHALT SURFACE COURSE, IL-9.5L, MIX ″C″, N30 (CDOT)	4% @ 30 GYR	112 LB/SY/IN	5″
LEVELING BINDER (HAND METHOD), N70	4% @ 70 GYR	112 LB/SY/IN	N/A
TEMPORARY RAMP	4% @ 50 GYR	112 LB/SY/IN	N/A
TEMPORARY PAVEMENT	4% @ 50 GYR	112 LB/SY/IN	6″

EXISTING LEGEND

- (a) 6″ HMA
- (b) 8″ PCC PAVEMENT
- (c) 5.5″ GRANULAR BASE
- (d) COMBINATION CURB AND GUTTER
- (e) MEDIAN/PLANTER
- (f) SIDEWALK
- (g) PERMEABLE PAVER

REMOVAL LEGEND

- (A) HOT MIX ASPHALT SURFACE REMOVAL (VARIABLE DEPTH) (CDOT4400010)
- (B) PAVEMENT REMOVAL (44000100)
- (C) EARTH EXCAVATION (2200100)
- (D) COMBINATION CURB AND GUTTER REMOVAL (44000500)
- (E) MEDIAN REMOVAL (44003100)
- (F) SIDEWALK REMOVAL (44000600)
- (G) CURB REMOVAL (44000300)
- (H) PERMEABLE PAVER REMOVAL

NOTE: THE ″AC TYPE″ FOR POLYMERIZED HMA MIXES SHALL BE ″SBS/SBR PG 78-22″ AND FOR NON-POLYMERIZED HMA THE ″AC TYPE″ SHALL BE ″PG 64-22″ UNLESS MODIFIED AT THE DISTRICT ONE SPECIAL PROVISIONS FOR USE OF RECYCLED MATERIALS SEE SPECIAL PROVISIONS.

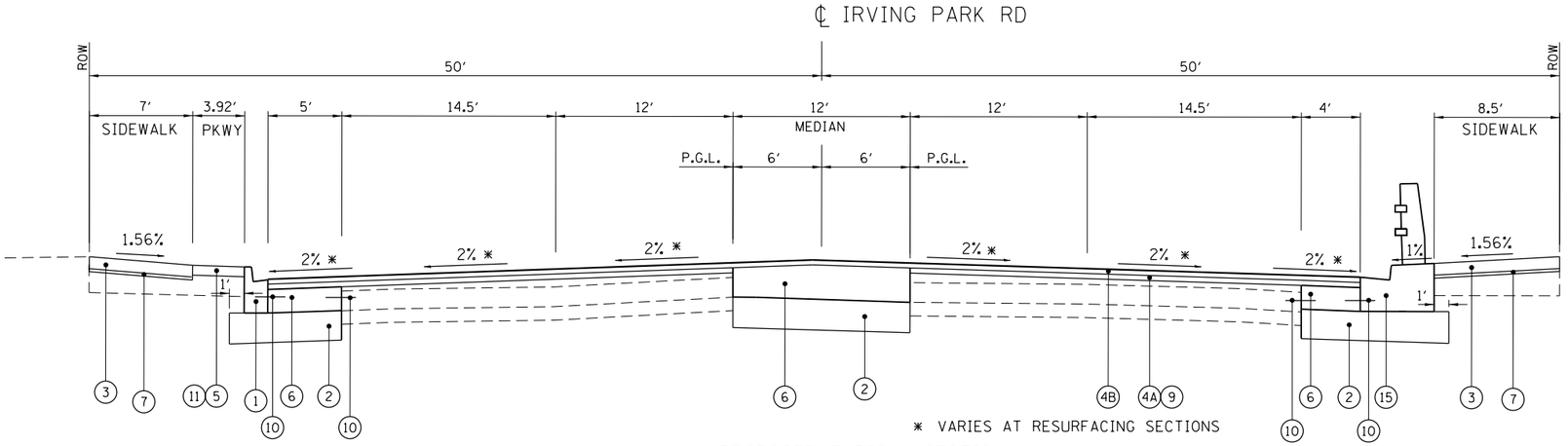

* VARIES AT RESURFACING SECTIONS

PROPOSED TYPICAL SECTION

RESURFACING STA. 93+58 TO STA. 98+69.25

SEE ROADWAY PLAN FOR SIDEWALK, PAVEMENT AND CURB & GUTTER RECONSTRUCTION LIMITS

BRIDGE OMISSION SEE STRUCTURAL PLANS

PROPOSED LEGEND

- (1) COMBINATION CONCRETE CURB AND GUTTER, TYPE B-V.12 (CDOT6060020)
- (2) AGGREGATE SUBGRADE IMPROVEMENT 12″ (30300112)
- (3) PORTLAND CEMENT CONCRETE SIDEWALK, 5″ (CDOT4240010)
- (4A) POLYMERIZED LEVELING BINDER (MACHINE METHOD), IL-4.75, N50 (1″) (40600827)
- (4B) POLYMERIZED HOT-MIX ASPHALT SURFACE COURSE, STONE MATRIX ASPHALT, N80 (2″) (40603153)
- (5) TOPSOIL FURNISH AND PLACE, VARIABLE DEPTH (21101600)
- (6) PORTLAND CEMENT CONCRETE BASE COUSE 11″ (35401600)
- (7) SAND CUSHION VARIABLE DEPTH (CDOT3110010)
- (8) PERMEABLE PAVERS
- (9) BITUMINOUS MATERIAL (TACK COAT) (40600290)
- (10) TIE BARS 1 1/4″ (44213208)
- (11) SEEDING, CLASS 1 (25000100)
- (12) 1½″ BEDDING MATERIAL (IDOT CA-16) (INCLUDED IN THE COST OF PERMEABLE PAVER)
- (13) 14″ SUBBASE GRANULAR MATERIAL, NON-LIMESTONE
- (14) FILTER FABRIC (28200200)
- (15) SPECIAL CURB AND WYOMING RAIL (REFER TO SHT. S-8 AND SHT. S-17 FOR SPECIAL CURB AND WYOMING RAIL DETAILS)

...\Cadd Sheets\E5038-sht-Irv_typ1
11/29/2017 1:36:21 PM

DESIGN:	SA			
DRAWN:	SA			
CHECKED:	RI			
APPROVED:				
DATE:	11/29/2017			
SCALE:	NTS			
FILE:	NO.	BY	DATE	DESCRIPTION
	REVISIONS			

KEY PLAN:

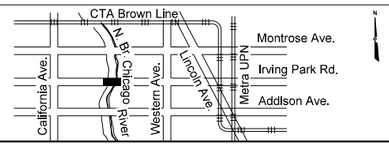

CDOT CHICAGO DEPARTMENT OF TRANSPORTATION

EJM ENGINEERING, INC.
411 South Wells Street Suite 1000
Chicago, Illinois 60607

W. IRVING PARK ROAD AT NORTH BRANCH CHICAGO RIVER

TYPICAL SECTIONS IRVING PARK ROAD

PROJECT NO. E-5-038

DRAWING NO. TYP–1

CONTRACT NO. XXXXX

TOTAL SHEETS	SHEET NO.
184	15

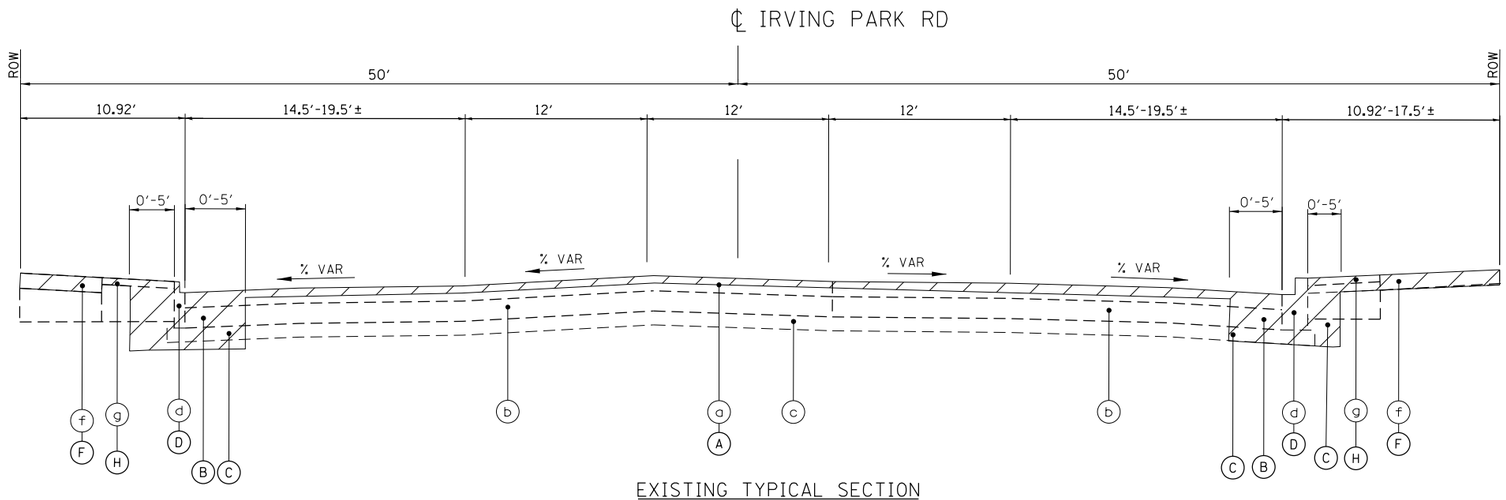

EXISTING TYPICAL SECTION
STA. 101+30.75 TO STA. 102+50
SEE ROADWAY PLAN FOR SIDEWAL, PAVEMENTAND
CURB & GUTTER RECONSTRUCTION LIMITS

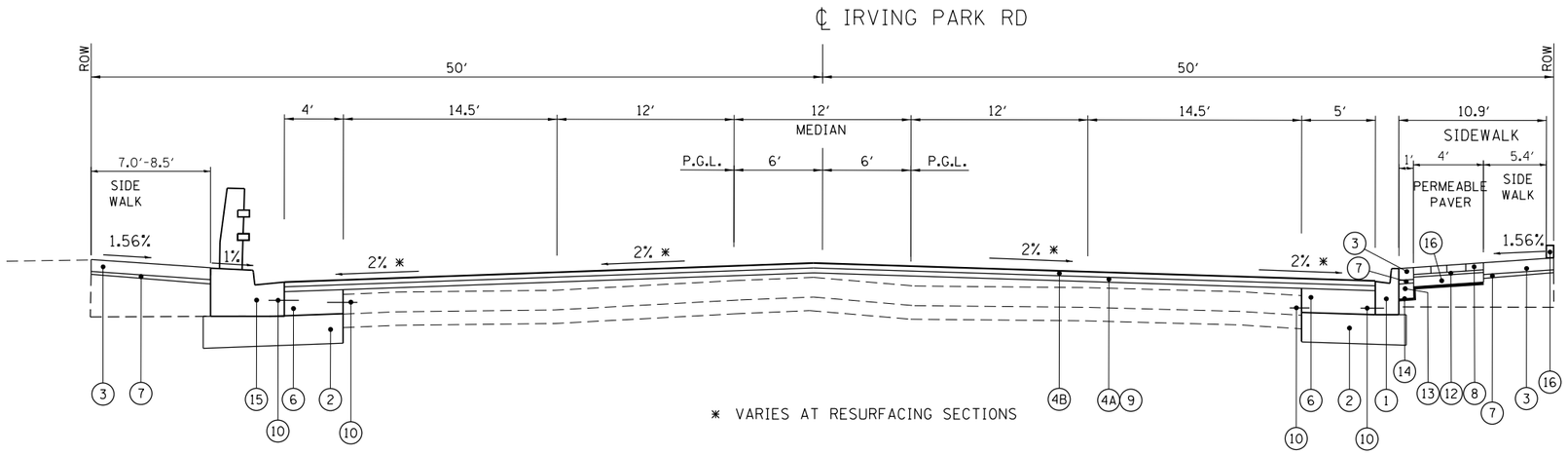

* VARIES AT RESURFACING SECTIONS

PROPOSED TYPICAL SECTION
RESURFACING STA. 101+30.75 TO STA. 102+50
SEE ROADWAY PLAN FOR SIDEWALK, PAVEMENT AND
CURB & GUTTER RECONSTRUCTION LIMITS

EXISTING LEGEND

- (a) 6″ HMA
- (b) 8″ PCC PAVEMENT
- (c) 5.5″ GRANULAR BASE
- (d) COMBINATION CURB AND GUTTER
- (e) MEDIAN/PLANTER
- (f) SIDEWALK
- (g) PERMEABLE PAVER

REMOVAL LEGEND

- (A) HOT MIX ASPHALT SURFACE REMOVAL (VARIABLE DEPTH) (CDOT4400010)
- (B) PAVEMENT REMOVAL (44000100)
- (C) EARTH EXCAVATION (2200100)
- (D) COMBINATION CURB AND GUTTER REMOVAL (44000500)
- (E) MEDIAN REMOVAL (44003100)
- (F) SIDEWALK REMOVAL (44000600)
- (G) CURB REMOVAL (44000300)
- (H) PERMEABLE PAVER REMOVAL

PROPOSED LEGEND

- (1) COMBINATION CONCRETE CURB AND GUTTER, TYPE B-V.12 (CDOT6060020)
- (2) AGGREGATE SUBGRADE IMPROVEMENT 12″ (30300112)
- (3) PORTLAND CEMENT CONCRETE SIDEWALK, 5″ (CDOT4240010)
- (4A) POLYMERIZED LEVELING BINDER (MACHINE METHOD), IL-4.75, N50 (1″) (40600827)
- (4B) POLYMERIZED HOT-MIX ASPHALT SURFACE COURSE, STONE MATRIX ASPHALT, N80 (2″) (40603153)
- (5) TOPSOIL FURNISH AND PLACE, VARIABLE DEPTH (21101600)
- (6) PORTLAND CEMENT CONCRETE BASE COURSE 11″ (35401600)
- (7) SAND CUSHION VARIABLE DEPTH (CDOT3110010)
- (8) PERMEABLE PAVERS
- (9) BITUMINOUS MATERIAL (TACK COAT) (40600290)
- (10) TIE BARS 1 1/4″ (44213208)
- (11) SEEDING, CLASS 1 (25000100)
- (12) 1½″ BEDDING MATERIAL (IDOT CA-16) (INCLUDED IN THE COST OF PERMEABLE PAVER)
- (13) 14″ SUBBASE GRANULAR MATERIAL, NON-LIMESTONE
- (14) FILTER FABRIC (28200200)
- (15) SPECIAL CURB AND WYOMING RAIL (REFER TO SHT. S-8 AND SHT. S-17 FOR SPECIAL CURB AND WYOMING RAIL DETAILS)
- (16) STRUCTURAL SOIL (CDOT3110020)

...\Cadd Sheets\E5038-sht-Irv_typ2
11/29/2017 1:36:24 PM

DESIGN: SA				
DRAWN: SA				
CHECKED: RI				
APPROVED:				
DATE: 11/29/2017				
SCALE: NTS				
FILE:	NO.	BY	DATE	DESCRIPTION
	REVISIONS			

KEY PLAN:

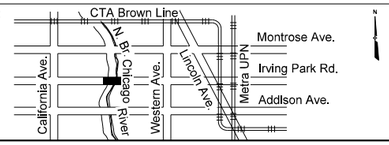

CDOT
CHICAGO DEPARTMENT OF TRANSPORTATION

EJM ENGINEERING, INC.
411 South Wells Street Suite 1000
Chicago, Illinois 60607

W. IRVING PARK ROAD AT NORTH BRANCH CHICAGO RIVER

TYPICAL SECTIONS
IRVING PARK ROAD

PROJECT NO. E-5-038
DRAWING NO. TYP-2
CONTRACT NO. XXXXX

TOTAL SHEETS	SHEET NO.
184	16

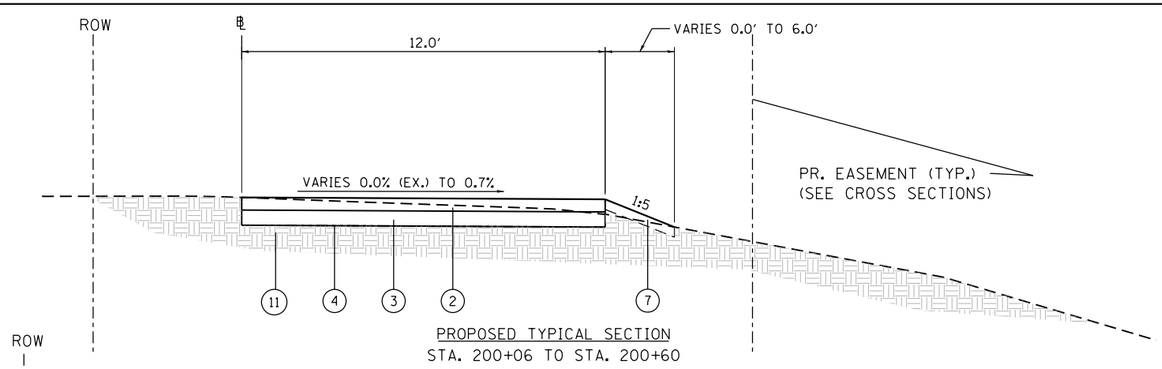

PROPOSED TYPICAL SECTION
STA. 200+06 TO STA. 200+60

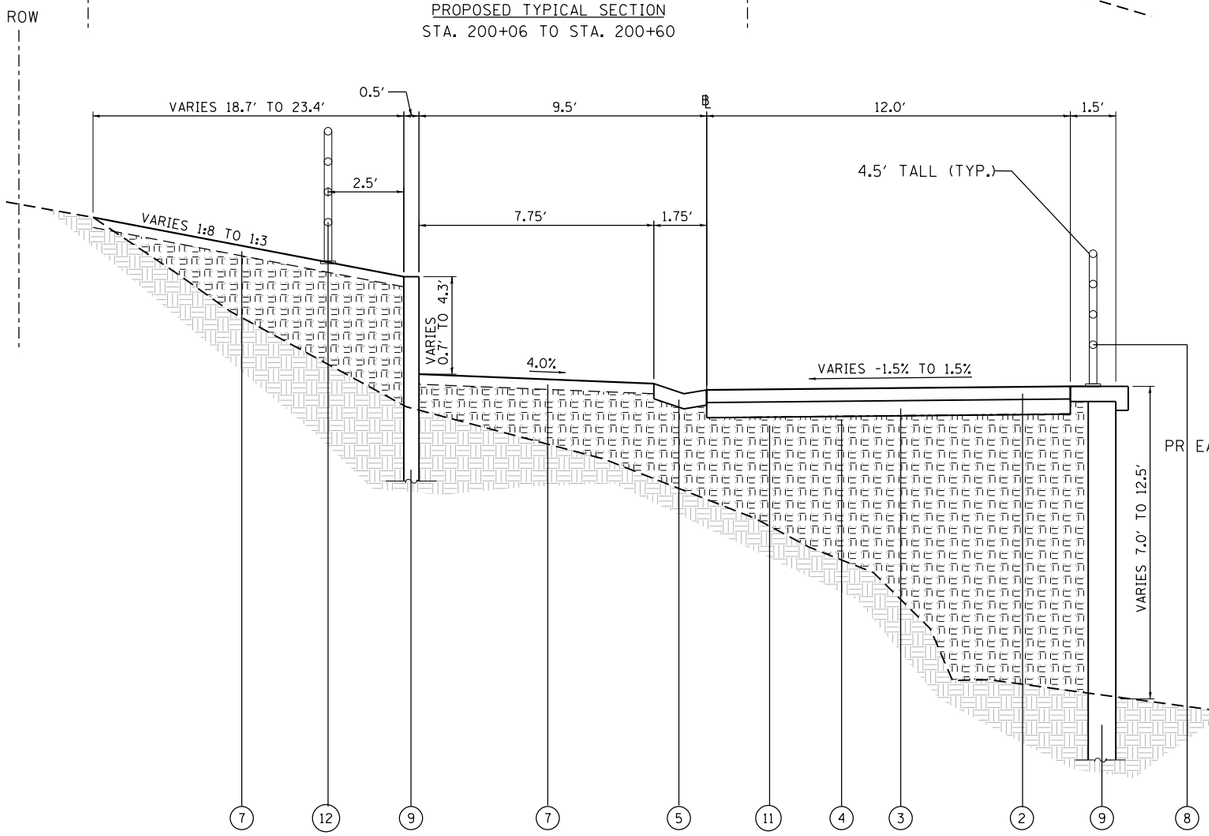

PROPOSED TYPICAL SECTION
STA. 203+15 TO STA. 203+61

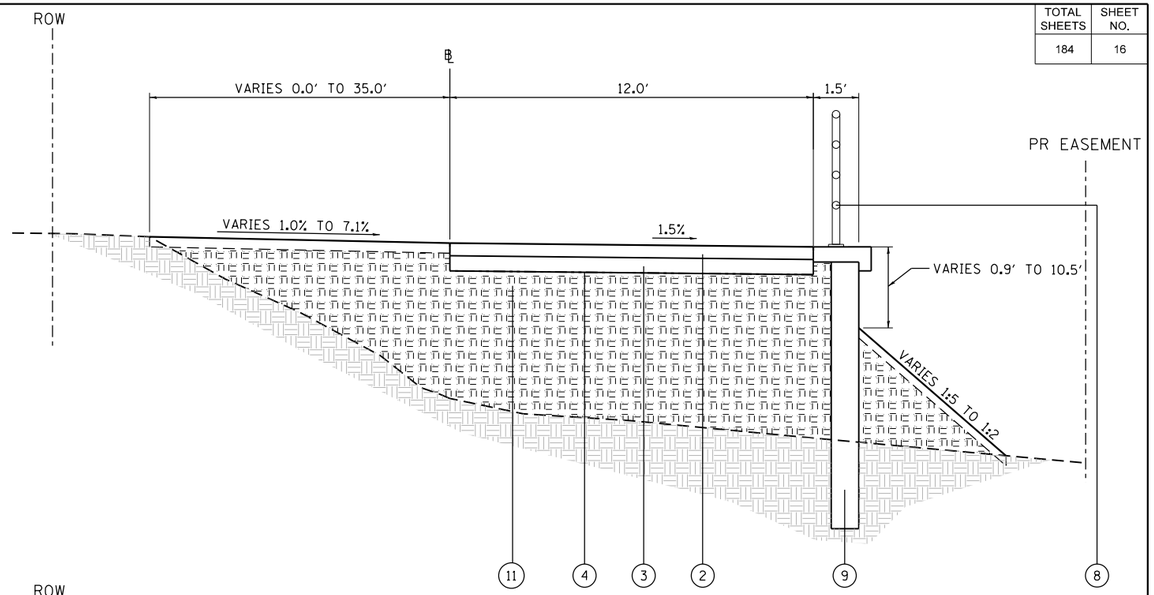

PROPOSED TYPICAL SECTION
STA. 200+60 TO STA. 202+05

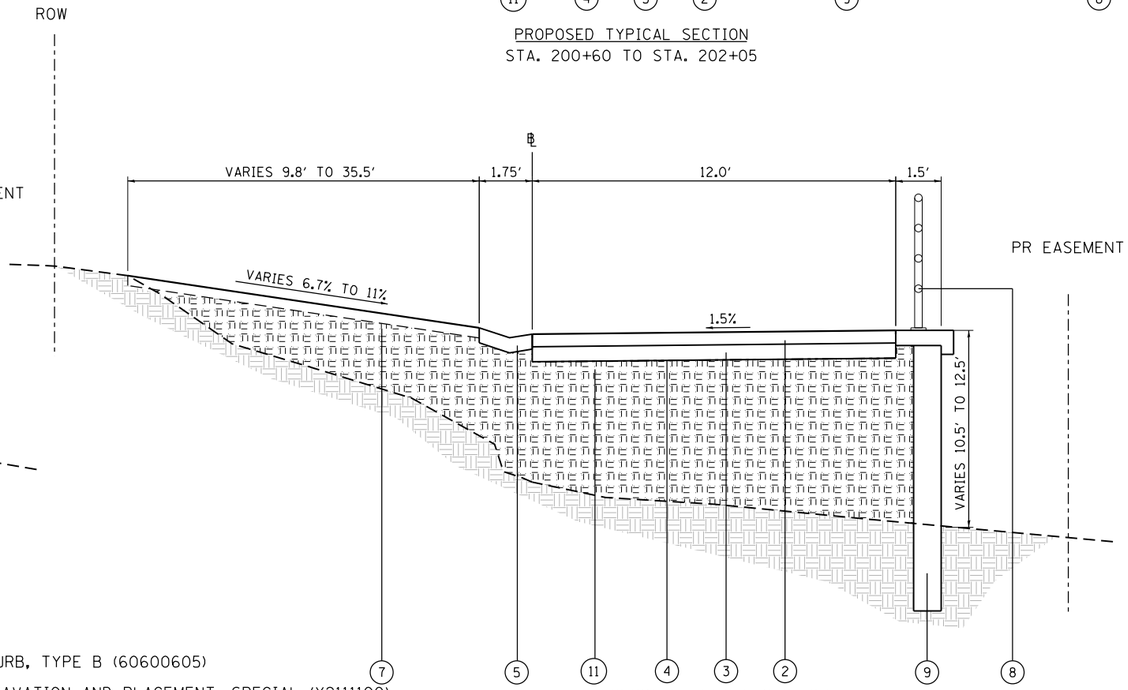

PROPOSED TYPICAL SECTION
STA. 202+05 TO STA. 203+15

(1) NOT USED
(2) HOT-MIX ASPHALT SURFACE COURSE, IL-9.5L, MIX "C", N30 (CDOT), 5"
(3) AGGREGATE BASE COURSE, TYPE B, 6" (35101800)
(4) GEOTECHNICAL FABRIC FOR GROUND STABILIZATION (21001000)
(5) CONCRETE GUTTER, TYPE B (60602800)
(6) CONCRETE CURB, TYPE B (60600605)
(7) TOPSOIL EXCAVATION AND PLACEMENT, SPECIAL (X2111100)
(8) ORNAMENTAL FENCE, 4.5′ (X2200018) (SEE A-04 FOR RUB RAIL DETAIL)
(9) PROPOSED RETAINING WALL
(10) PORTLAND CEMENT CONCRETE SLAB (SEE STRUCTURAL PLANS)
(11) FURNISHED EXCAVATION
(12) CHAIN LINK FENCE (SPECIAL)

EXISTING GROUND

FILL SECTION

NOTES:
1. RETAINING WALL IS SHOWN FOR GRAPHICAL PURPOSE. SEE STRUCTURAL PLANS FOR WALL SECTION AND FOUNDATION.
2. RIGHT OF WAY AND EASEMENT LOCATIONS VARY. SEE ROADWAY PLANS FOR LOCATIONS.

DESIGN:	BJD			
DRAWN:	BJD			
CHECKED:	SA			
APPROVED:				
DATE:	11/29/2017			
SCALE:	NTS			
FILE:		NO.	BY	DATE
		REVISIONS		

KEY PLAN:

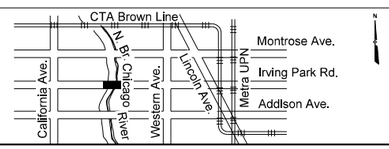

CDOT
CHICAGO DEPARTMENT OF TRANSPORTATION

EJM ENGINEERING, INC.
411 South Wells Street Suite 1000
Chicago, Illinois 60607

W. IRVING PARK ROAD
AT NORTH BRANCH
CHICAGO RIVER

TYPICAL SECTIONS
SHARED-USE PATH

PROJECT NO.
E-5-038

DRAWING NO.
TYP-3

CONTRACT NO. XXXXX

...\E5038-sht-path_typ1
11/29/2017 1:36:27 PM

TOTAL SHEETS	SHEET NO.
184	17

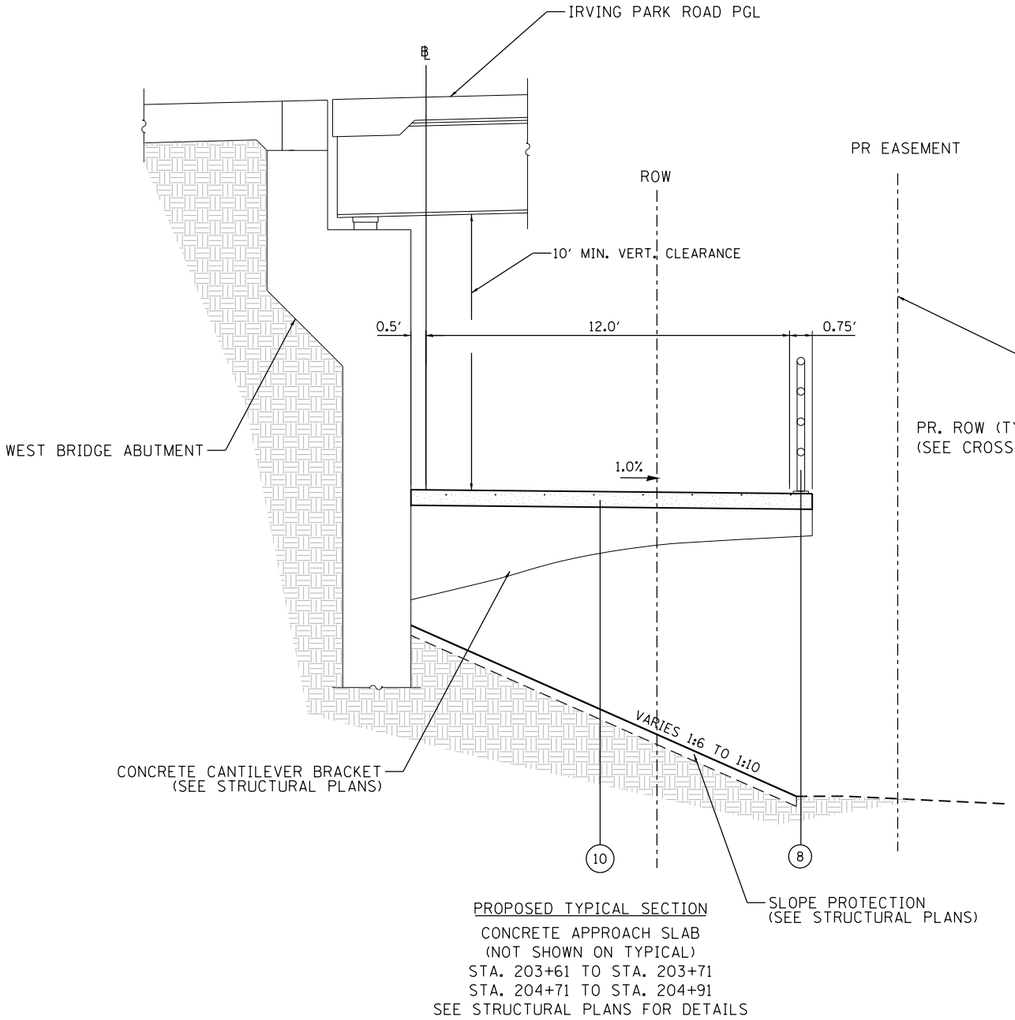

PROPOSED TYPICAL SECTION

CONCRETE APPROACH SLAB
(NOT SHOWN ON TYPICAL)
STA. 203+61 TO STA. 203+71
STA. 204+71 TO STA. 204+91
SEE STRUCTURAL PLANS FOR DETAILS

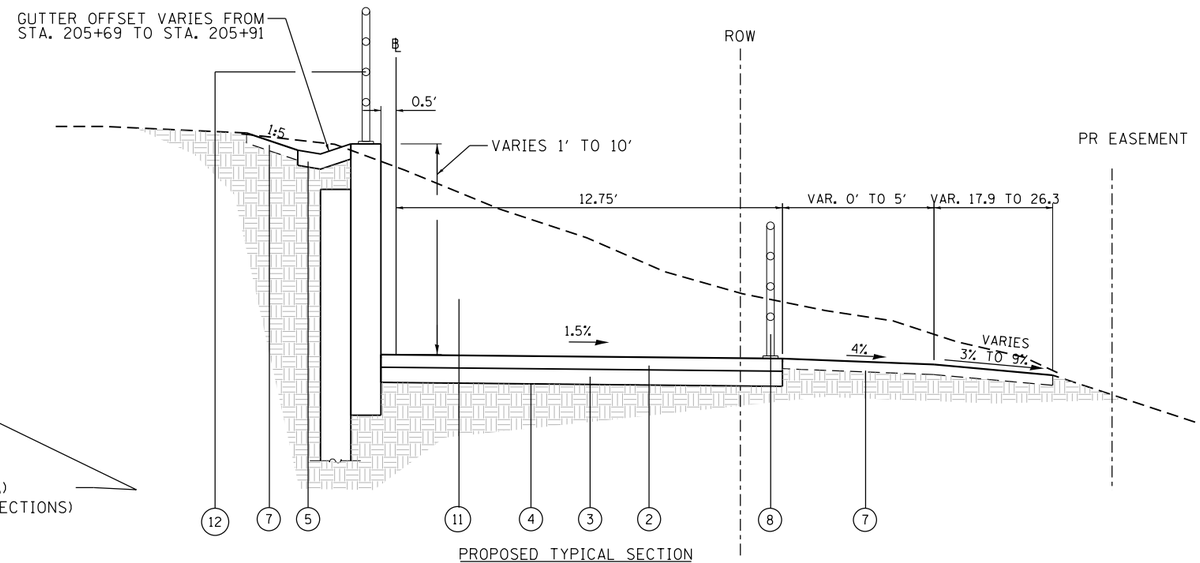

PROPOSED TYPICAL SECTION
STA. 204+91 TO STA. 206+16

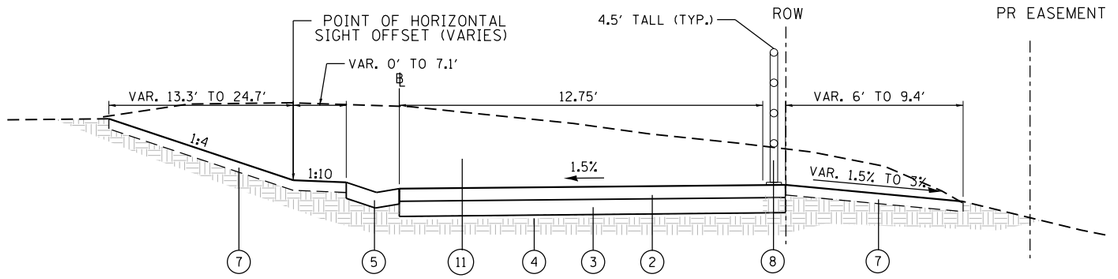

PROPOSED TYPICAL SECTION
STA. 206+24 TO STA. 206+85

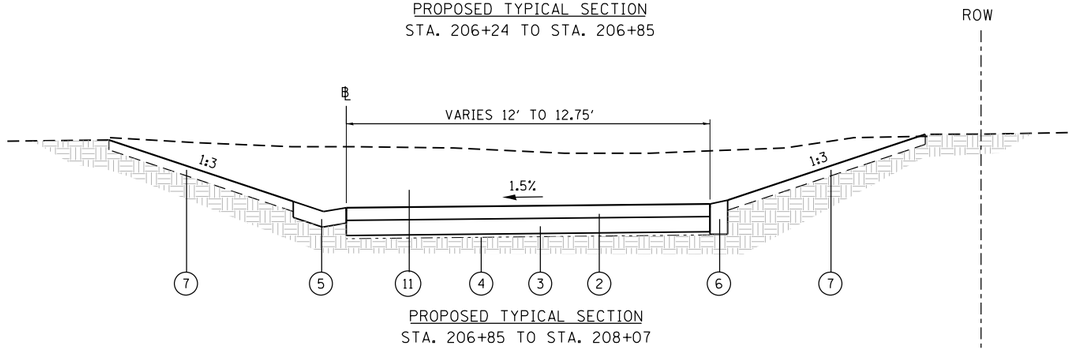

PROPOSED TYPICAL SECTION
STA. 206+85 TO STA. 208+07

1. NOT USED
2. HOT-MIX ASPHALT SURFACE COURSE, IL-9.5L, MIX "C", N30 (CDOT), 5"
3. AGGREGATE BASE COURSE, TYPE B, 6" (35101600)
4. GEOTECHNICAL FABRIC FOR GROUND STABILIZATION (21001000)
5. CONCRETE GUTTER, TYPE B (60602800)
6. CONCRETE CURB, TYPE B, DEPRESSED ADJACENT TO FLEXIBLE PAVEMENT (60600605)
7. TOPSOIL EXCAVATION AND PLACEMENT, SPECIAL (X2111100)
8. ORNAMENTAL FENCE, 4.5' (X2200018) (SEE A-04 FOR RUB RAIL DETAIL)
9. PROPOSED RETAINING WALL
10. PORTLAND CEMENT CONCRETE SLAB (SEE STRUCTURAL PLANS)
11. EARTH EXCAVATION
12. CHAIN LINK FENCE (SPECIAL)

EXISTING GROUND

FILL SECTION

NOTES:
1. RETAINING WALL IS SHOWN FOR GRAPHICAL PURPOSE. SEE STRUCTURAL PLANS FOR WALL SECTION AND FOUNDATION.
2. RIGHT OF WAY AND EASEMENT LOCATIONS VARY. SEE ROADWAY PLANS FOR LOCATIONS.

...\E5038-sht-path_typ2
11/29/2017 1:36:30 PM

DESIGN: BJD				
DRAWN: BJD				
CHECKED: SA				
APPROVED:				
DATE: 11/29/2017				
SCALE: NTS				
FILE:	NO.	BY	DATE	DESCRIPTION
	REVISIONS			

KEY PLAN:

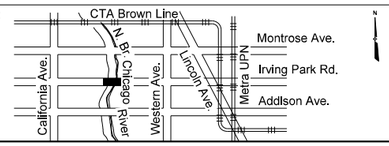

CDOT
CHICAGO DEPARTMENT OF TRANSPORTATION

EJM ENGINEERING, INC.
411 South Wells Street Suite 1000
Chicago, Illinois 60607

W. IRVING PARK ROAD
AT NORTH BRANCH
CHICAGO RIVER

TYPICAL SECTIONS SHARED-USE PATH

PROJECT NO. E-5-038

DRAWING NO. TYP-4

CONTRACT NO. XXXXX

TOTAL SHEETS	SHEET NO.
184	18

MAINTENANCE OF TRAFFIC GENERAL NOTES

1. THE CONTRACTOR'S ATTENTION IS DIRECTED TO THE FACT THAT WHEN WORK COMMENCES, THE CONTRACTOR SHALL ASSUME THE MAINTENANCE OF ANY PAVEMENT, DRAINAGE FACILITIES, TRAFFIC CONTROL SIGNS, TRAFFIC SIGNALS, LIGHTING, PAVEMENT MARKINGS, AND OTHER APPURTENANCES OF ROADWAYS WITHIN THE LIMITS OF THE CONTRACT WHICH ARE USED BY THE PUBLIC DURING CONSTRUCTION.

2. THE CONTRACTOR SHALL RETAIN THIS MAINTENANCE RESPONSIBILITY UNTIL THE CITY ASSUMES THE MAINTENANCE. THE NEED FOR SNOW AND ICE CONTROL DURING THE CONSTRUCTION PERIOD WILL BE ACCOMMODATED FOR BY OTHERS.

3. TEMPORARY TRAFFIC CONTROL SIGNS SHALL BE INSTALLED AT THE DIRECTION AND UNDER THE SUPERVISION OF THE ENGINEER. SEVEN (7) DAYS NOTICE SHALL BE GIVEN TO THE ENGINEER FOR DIRECTION OF SIGNING.

4. THE CONTRACTOR SHALL COORDINATE THE MAINTENANCE OF TRAFFIC WITH LANE CLOSURES OF CONCURRENT PROJECTS.

5. CHANGABLE MESSAGE SIGN ONE EACH SHALL BE PLACED AT EASTBOUND, WESTBOUND IRVING PARK RD, AS DIRECTED BY THE ENGINEER. ALL CHANGABLE MESSAGE SIGNS SHALL BE INSTALLED TWO WEEKS PRIOR TO ANY CONSTRUCTION ACTIVITY.

6. ADDITIONAL TRAFFIC CONTROL SIGNS MAY BE REQUIRED AS DIRECTED BY THE COMMISSIONER. THE COST SHALL BE CONSIDERED INCLUDED IN THE COST OF TRAFFIC CONTROL AND PROTECTION, (SPECIAL).

7. ALL SIGNS SHALL MEET CITY AND THE MANUAL ON UNIFORM TRAFFIC CONTROL DEVICES STANDARDS AND SHALL MEET WITH APPROVAL OF THE COMMISSIONER, REGARDING LOCATION, TYPE, SIZE, NUMBER, AND DURATION, OR AS DIRECTED BY THE ENGINEER.

8. TRAFFIC CONTROL SIGNS SHALL BE PLACED AS SHOWN ON THE PLANS OR AS OTHERWISE DIRECTED BY COMMISSIONER. ALL WORK DESCRIBED IN GENERAL NOTES SHALL BE INCIDENTAL TO TRAFFIC CONTROL AND PROTECTION, (SPECIAL) UNLESS STATED OTHERWISE.

9. THE CONTRACTOR SHALL BE REQUIRED TO PROVIDE AND MAINTAIN ACCESS TO ALL PRIVATE AND COMMERCIAL PROPERTY WITHIN THE WORK AREAS DURING THE CONSTRUCTION PERIOD, WHICH MAY INCLUDE THE PROVISION OF TEMPORARY AGGREGATE IN THE WORK ZONE. THIS WORK WILL BE PAID FOR AT THE CONTRACT UNIT PRICE PER TON FOR MAINTENANCE OF ACCESS TO ABUTTING PROPERTY. A NOMINAL QUANTITY IS PROVIDED FOR THIS PURPOSE.

10. DURING CONSTRUCTION OPERATIONS, THE CONTRACTOR SHALL TAKE ALL NECESSARY PRECAUTIONS TO PROTECT ADJACENT TRAFFIC LANES OPEN TO TRAFFIC FROM DEBRIS BEING BLOWN OR OTHERWISE REMOVED FROM THE CONSTRUCTION AREAS. THE CONTRACTOR SHALL ALSO BE RESPONSIBLE FOR KEEPING DEBRIS OFF THE ADJACENT TRAVELED LANE SURFACE.

11. THE CONTRACTOR'S VEHICLES SHALL ALWAYS MOVE WITH AND NOT AGAINST OR ACROSS THE FLOW OF TRAFFIC. THESE VEHICLES SHALL ENTER AND LEAVE WORK AREAS IN A MANNER THAT WILL NOT BE HAZARDOUS TO OR INTERFERE WITH NORMAL TRAFFIC AND SHALL NOT STOP OR PARK EXCEPT WITHIN DESIGNATED WORK AREAS. PERSONAL VEHICLES SHALL NOT BE PERMITTED TO PARK WITHIN THE RIGHT-OF-WAY EXCEPT IN SPECIFIC AREAS DESIGNATED BY THE COMMISSIONER.

12. THE CONTRACTOR SHALL WALK THROUGH THE JOB BEFORE CONSTRUCTION ALONG WITH AUTHORIZED REPRESENTATIVE OF THE CITY OF CHICAGO TO CONFIRM THE COUNT OF STREET SIGNS AND PARKING METERS. CONTRACTOR SHALL NOTIFY THE CITY OF CHICAGO AT LEAST 48 HOURS PRIOR TO SCHEDULE THE WALK THROUGH.

13. THE CONTRACTOR SHALL REMOVE ALL EXISTING PAVEMENT MARKINGS THAT CONFLICT WITH THE TRAFFIC CONTROL PLAN. THIS WORK SHALL BE PAID FOR AS PAVEMENT MARKING REMOVAL. THE CONTRACTOR SHALL RESTORE ALL PAVEMENT MARKINGS DAMAGED DURING CONSTRUCTION.

14. ALL CONSTRUCTION SIGNS, BARRICADES, LIGHTS, FLAGGER, FLEXIBLE DELINEATORS, AND IMPACT ATTENUATORS, SHALL BE PROVIDED BY THE CONTRACTOR.

15. ALL SIDEWALK CLOSURES SHALL FOLLOW CDOT STANDARD CROSSWALK AND SIDEWALK CLOSURE SHEET A-6-11. THE SIDEWALK SHALL BE OPEN ON AT LEAST ONE SIDE OF THE STREET AT ALL TIMES. THE CONTRACTOR SHALL INSTALL TEMPORARY ADA RAMPS WHEN EXISTING RAMPS CANNOT BE USED. THIS SHALL NOT BE PAID FOR SEPARATELY AND SHALL BE INCLUDED IN THE COST OF TRAFFIC CONTROL AND PROTECTION, (SPECIAL).

16. HMA SURFACE COURSE, MIX "D", N50 SHALL BE USED TO CONSTRUCT ALL TEMPORARY RAMPS BETWEEN EXISTING AND PROPOSED PAVEMENT SURFACES. REMOVAL OF THIS MATERIAL SHALL BE CONSIDERED INCLUDED IN THE COST OF HMA SURFACE MIX D, N50.

17. CONTRACTOR SHALL PROVIDE ACCESS TO CTA BUS STOPS AT ALL TIMES. CONTRACTOR SHALL COORDINATE A MINIMUM OF ONE WEEK IN ADVANCE WITH CTA REGARDING RELOCATION OF BUS STOPS. CONTACT JOE OSOWSKI AT CTA (312-631-4151)

18. ALL LIGHTS SHALL MEET THE REQUIREMENTS FOR TYPE A LOW INTENSITY FLASHING LIGHTS IN ARTICLE 1106.02(a) OF THE STANDARD SPECIFICATIONS. ALL LIGHTS SHALL OPERATE DURING THE HOURS OF DARKNESS. ONLY LIGHTS THAT HAVE BEEN APPROVED BY THE COMMISSIONER SHALL BE USED.

19. CONSTRUCTION ACTIVITY ON HORNER PARK SHALL BE COORDINATED WITH CHICAGO PARK DISTRICT.

20. THE CONTRACTOR SHALL CONTACT THE IDOT DISTRICT 1 TRAFFIC CONTROL SUPERVISOR AT (847) 705-4470 A MINIMUM OF 72 HOURS PRIOR TO BEGINNING WORK.

21. ALL WORK OUTLINED IN THE MAINTENANCE OF TRAFFIC, GENERAL NOTES SHALL BE INCIDENTAL TO ITEM TRAFFIC CONTROL AND PROTECTION, SPECIAL UNLESS STATED OTHERWISE.

SUGGESTED TRAFFIC CONTROL AND STAGING

NOTE: THIS SEQUENCE IS SUGGESTED; HOWEVER, IT IS THE CONTRACTOR'S RESPONSIBILITY TO COORDINATE WITH AND RECEIVE ALL NECESSARY PERMITS FROM CDOT'S PERMIT OFFICE.

PRESTAGE

CLOSE INSIDE LANE DURING OFF PEAK HOURS.
REMOVE MEDIAN SECTION TO THE EAST. INSTALL BASE COURSE BETWEEN 95+67 TO 98+67.
INSTALL POLYMERIZED LEVELLING BINDER (MACHINE METHOD), N50 - 3"

REMOVE MEDIAN SECTION ON THE BRIDGE.
INSTALL LEVELLING BINDER (HAND METHOD) N70 - 3".

STAGE 1

MOVE TRAFFIC LANES TO NORTH PORTION OF THE BRIDGE ACROSS THE IRVING PARK ROAD BRIDGE. CONSTRUCT SOUTH SECTION OF THE BRIDGE. START BIKE PATH CONSTRUCTION. INSTALL TEMPORARY PAVEMENT.

STAGE 2

MOVE TRAFFIC LANES TO SOUTH SIDE ACROSS THE IRVING PARK ROAD ON NEW BRIDGE SECTION. CONSTRUCT NORTH SECTION OF THE BRIDGE. INSTALL TEMPORARY PAVEMENT. CONTINUE WORK ON BIKE PATH CONSTRUCTION.

STAGE 3

MOVE TRAFFIC LANES TO NORTH AND SOUTH SIDE THE IRVING PARK ROAD ON NEW BRIDGE SECTION. CONSTRUCT CENTER SECTION OF THE BRIDGE. COMPLETE WORK ON BIKE PATH CONSTRUCTION. REMOVE REMAINING MEDIAN TO THE WEST. INSTALL SUBBASE.

STAGE 4

MOVE TRAFFIC LANES TO CENTER OF THE IRVING PARK ROAD ON NEW BRIDGE SECTION. REMOVE TEMPORARY PAVEMENT. CONSTRUCT BRIDGE PARAPET AND SIDEWALK ON THE BRIDGE. CONSTRUCT SIDEWALK, CURB AND GUTTER ON PAVEMENTADJACENT TO IRVING PARK RD BRIDGE. COMPLETE GRADING WORK ON BIKE PATH.

POST STAGE

REMOVE HMA ON IRVING PARK ROAD. INSTALL BINDER AND SURFACE COURSE.
INSTALL PAVEMENT MARKING AND SIGNS. FINISH PUNCH LIST ITEMS.

...\E5038-sht-MOT_notes
4/27/2018 3:11:41 PM

DESIGN:	SA				
DRAWN:	SA				
CHECKED:	RI				
APPROVED:					
DATE:	11/29/2017				
SCALE:	NTS				
FILE:		NO.	BY	DATE	DESCRIPTION
		REVISIONS			

KEY PLAN:

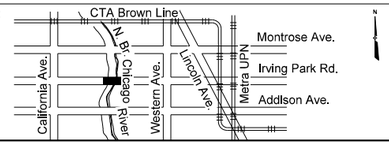

CDOT
CHICAGO DEPARTMENT OF TRANSPORTATION

EJM ENGINEERING, INC.
411 South Wells Street Suite 1000
Chicago, Illinois 60607

W. IRVING PARK ROAD AT NORTH BRANCH CHICAGO RIVER

MAINTENANCE OF TRAFFIC GENERAL NOTES AND STAGING

PROJECT NO. E-5-038
DRAWING NO. MOT–1
CONTRACT NO. XXXXX

TOTAL SHEETS	SHEET NO.
184	19

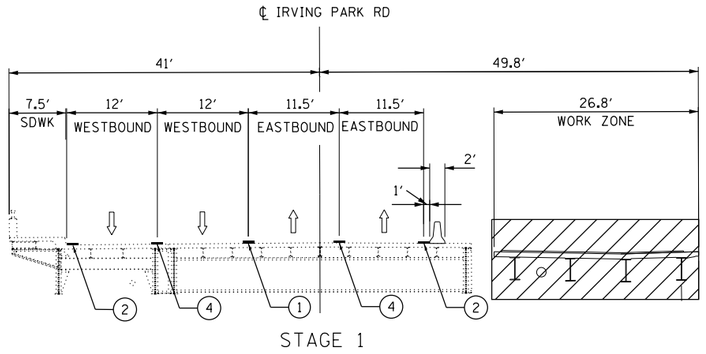

STAGE 1

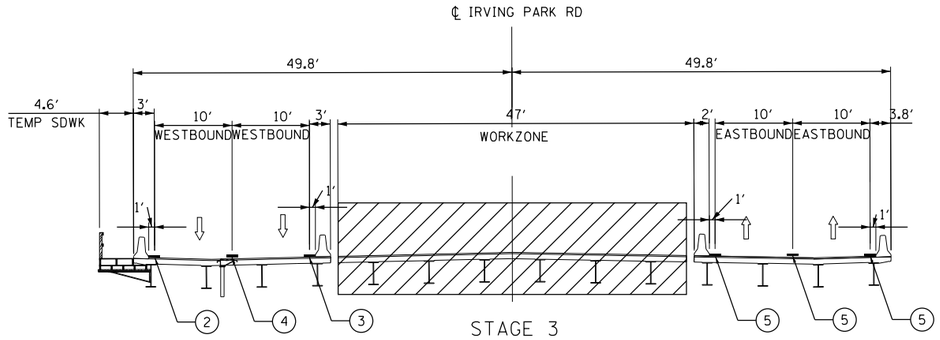

STAGE 3

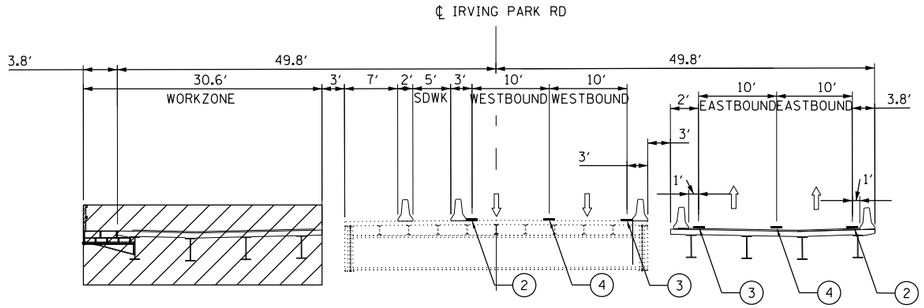

STAGE 2

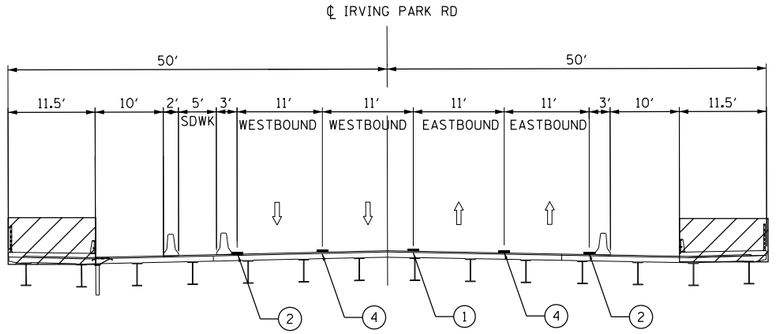

STAGE 4

LEGEND

- TRAFFIC DIRECTION
- WORKZONE
- TEMPORARY CONCRETE BARRIER
- (1) TEMPORARY PAVEMENT MARKING - LINE 4", DOUBLE YELLOW (70300220)
- (2) TEMPORARY PAVEMENT MARKING - LINE 4", WHITE (70300220)
- (3) TEMPORARY PAVEMENT MARKING - LINE 4", YELLOW (70300220)
- (4) TEMPORARY PAVEMENT MARKING - LINE 4", 10′ SKIP 30′ DASH (70300220)
- (5) PAVEMENT MARKING INSTALLED IN PREVIOUS STAGE

...\Cadd Sheets\E5038-sht-MOT_typ
11/29/2017 1:36:35 PM

DESIGN:	SA			
DRAWN:	SA			
CHECKED:	RI			
APPROVED:				
DATE:	11/29/2017			
SCALE:	NTS			
FILE:	NO.	BY	DATE	DESCRIPTION
	REVISIONS			

KEY PLAN:

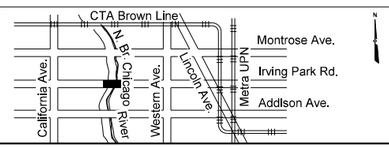

CDOT
CHICAGO DEPARTMENT OF TRANSPORTATION

EJM ENGINEERING, INC.
411 South Wells Street Suite 1000
Chicago, Illinois 60607

W. IRVING PARK ROAD AT NORTH BRANCH CHICAGO RIVER

MAINTENANCE OF TRAFFIC TYPICAL SECTIONS

PROJECT NO. E-5-038

DRAWING NO. MOT–2

CONTRACT NO. XXXXX

TOTAL SHEETS	SHEET NO.
184	20

ADVANCE CONSTRUCTION SIGN

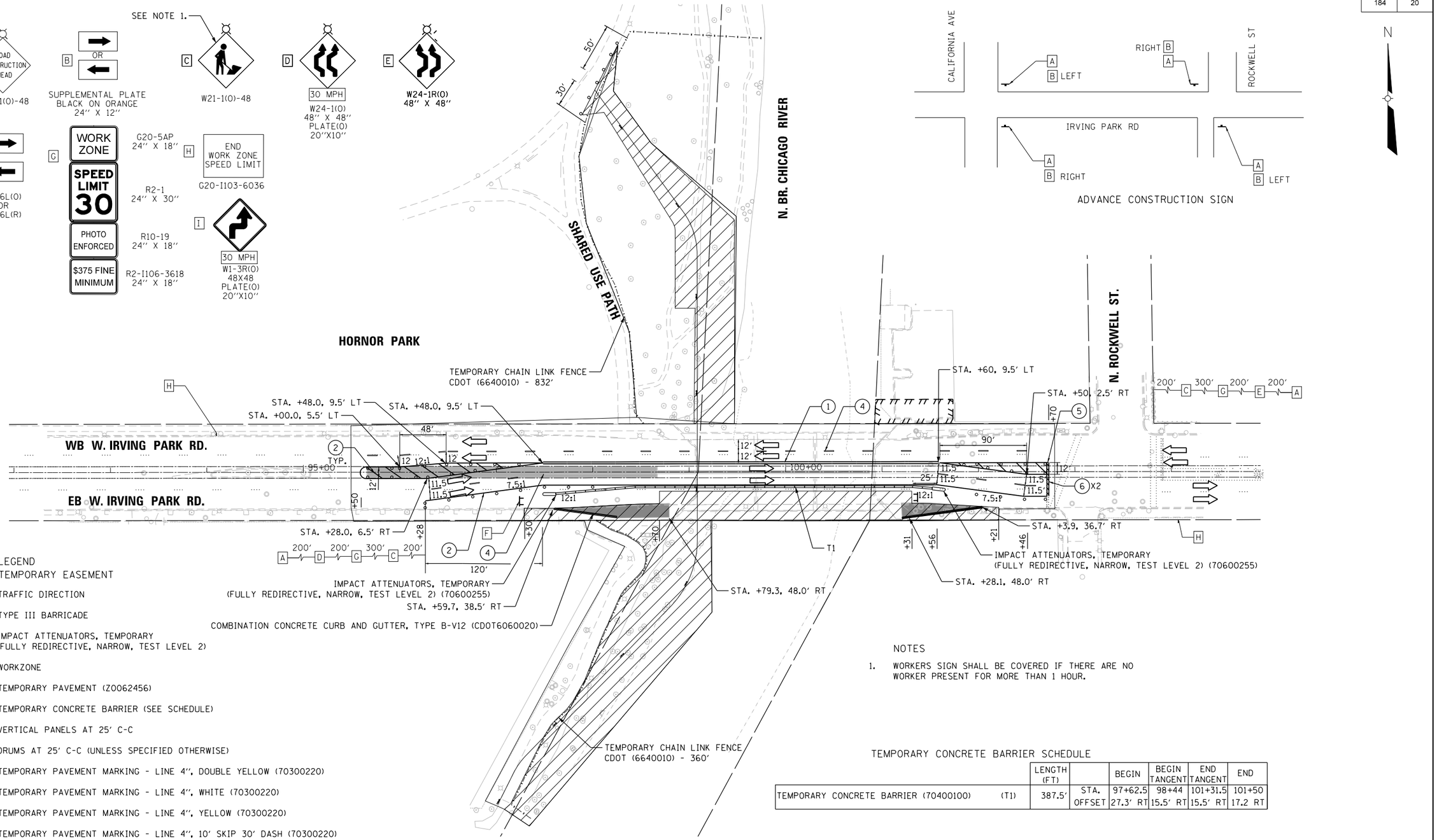

LEGEND

TEMPORARY EASEMENT

TRAFFIC DIRECTION

TYPE III BARRICADE

IMPACT ATTENUATORS, TEMPORARY (FULLY REDIRECTIVE, NARROW, TEST LEVEL 2)

WORKZONE

TEMPORARY PAVEMENT (Z0062456)

TEMPORARY CONCRETE BARRIER (SEE SCHEDULE)

VERTICAL PANELS AT 25' C-C

DRUMS AT 25' C-C (UNLESS SPECIFIED OTHERWISE)

1. TEMPORARY PAVEMENT MARKING - LINE 4", DOUBLE YELLOW (70300220)
2. TEMPORARY PAVEMENT MARKING - LINE 4", WHITE (70300220)
3. TEMPORARY PAVEMENT MARKING - LINE 4", YELLOW (70300220)
4. TEMPORARY PAVEMENT MARKING - LINE 4", 10' SKIP 30' DASH (70300220)
5. TEMPORARY PAVEMENT MARKING - LINE 4", 2' SKIP 6' DASH (70300220)
6. TEMPORARY PAVEMENT MARKING - LINE 12", WHITE (70300260)
7. PAVEMENT MARKING INSTALLED IN PREVIOUS STAGE

NOTES

1. WORKERS SIGN SHALL BE COVERED IF THERE ARE NO WORKER PRESENT FOR MORE THAN 1 HOUR.

TEMPORARY CONCRETE BARRIER SCHEDULE

		LENGTH (FT)		BEGIN	BEGIN TANGENT	END TANGENT	END
TEMPORARY CONCRETE BARRIER (70400100)	(T1)	387.5'	STA.	97+62.5	98+44	101+31.5	101+50
			OFFSET	27.3' RT	15.5' RT	15.5' RT	17.2 RT

0 50 100 150
SCALE IN FEET

DESIGN: SA				
DRAWN: SA				
CHECKED: RI				
APPROVED:				
DATE: 11/29/2017				
SCALE: 1" = 50'				
FILE:	NO.	BY	DATE	DESCRIPTION
	REVISIONS			

KEY PLAN:

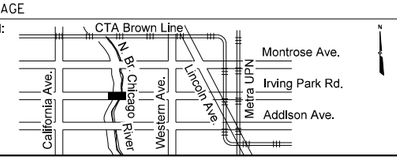

CDOT
CHICAGO DEPARTMENT OF TRANSPORTATION

EJM ENGINEERING, INC.
411 South Wells Street Suite 1000
Chicago, Illinois 60607

W. IRVING PARK ROAD AT NORTH BRANCH CHICAGO RIVER

MAINTENANCE OF TRAFFIC STAGE 1

PROJECT NO. E-5-038

DRAWING NO. MOT-3

CONTRACT NO. XXXXX

...\Cadd Sheets\E5038-sht-MOT1

11/29/2017 1:36:39 PM

TOTAL SHEETS	SHEET NO.
184	21

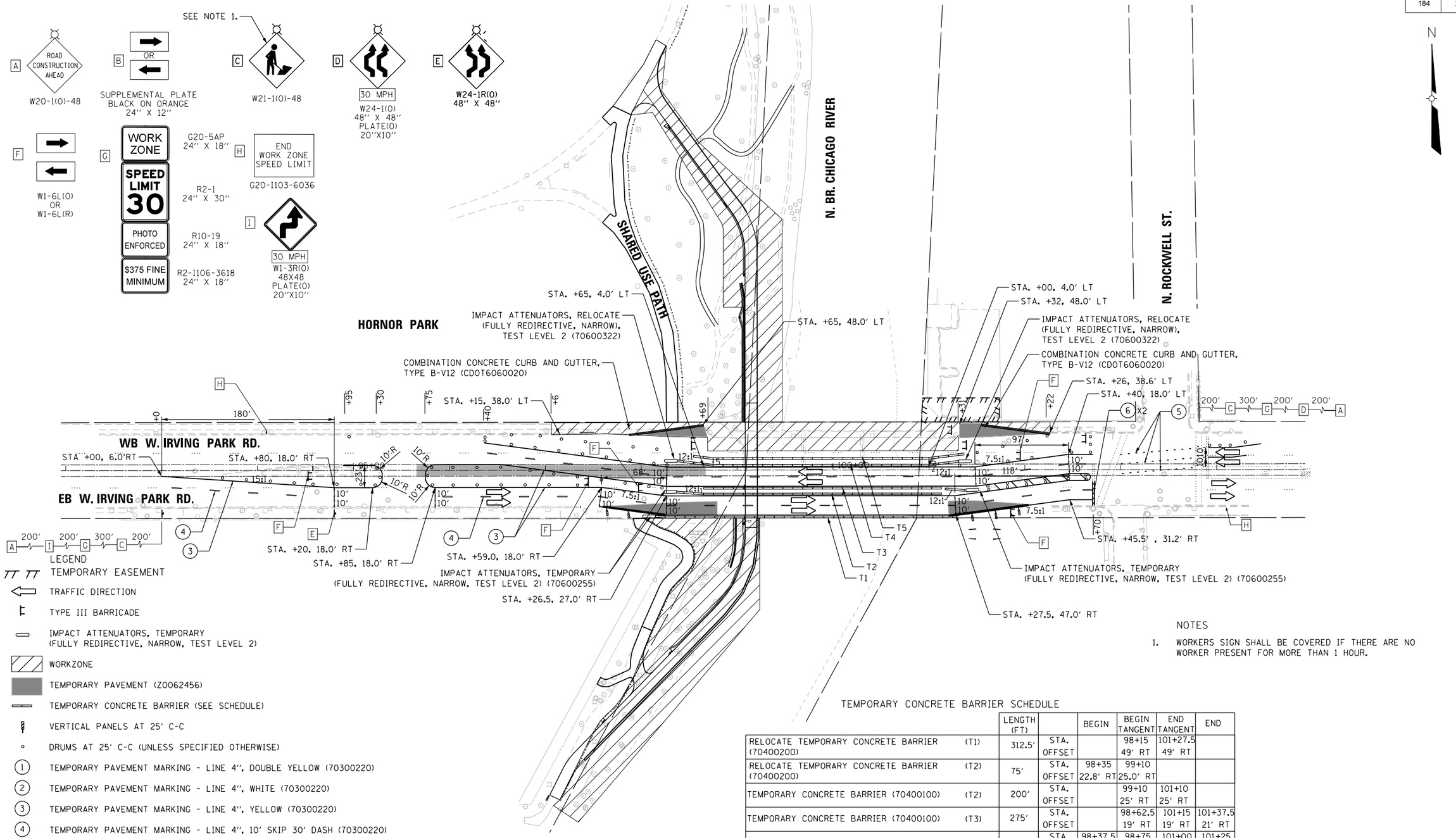

LEGEND

- TEMPORARY EASEMENT
- TRAFFIC DIRECTION
- TYPE III BARRICADE
- IMPACT ATTENUATORS, TEMPORARY (FULLY REDIRECTIVE, NARROW, TEST LEVEL 2)
- WORKZONE
- TEMPORARY PAVEMENT (Z0062456)
- TEMPORARY CONCRETE BARRIER (SEE SCHEDULE)
- VERTICAL PANELS AT 25' C-C
- DRUMS AT 25' C-C (UNLESS SPECIFIED OTHERWISE)
- (1) TEMPORARY PAVEMENT MARKING - LINE 4'', DOUBLE YELLOW (70300220)
- (2) TEMPORARY PAVEMENT MARKING - LINE 4'', WHITE (70300220)
- (3) TEMPORARY PAVEMENT MARKING - LINE 4'', YELLOW (70300220)
- (4) TEMPORARY PAVEMENT MARKING - LINE 4'', 10' SKIP 30' DASH (70300220)
- (5) TEMPORARY PAVEMENT MARKING - LINE 4'', 2' SKIP 6' DASH (70300220)
- (6) TEMPORARY PAVEMENT MARKING - LINE 12'', WHITE (70300260)
- (7) PAVEMENT MARKING INSTALLED IN PREVIOUS STAGE

NOTES

1. WORKERS SIGN SHALL BE COVERED IF THERE ARE NO WORKER PRESENT FOR MORE THAN 1 HOUR.

TEMPORARY CONCRETE BARRIER SCHEDULE

		LENGTH (FT)		BEGIN	BEGIN TANGENT	END TANGENT	END
RELOCATE TEMPORARY CONCRETE BARRIER (70400200)	(T1)	312.5'	STA.		98+15	101+27.5	
			OFFSET		49' RT	49' RT	
RELOCATE TEMPORARY CONCRETE BARRIER (70400200)	(T2)	75'	STA.	98+35	99+10		
			OFFSET	22.8' RT	25.0' RT		
TEMPORARY CONCRETE BARRIER (70400100)	(T2)	200'	STA.		99+10	101+10	
			OFFSET		25' RT	25' RT	
TEMPORARY CONCRETE BARRIER (70400100)	(T3)	275'	STA.		98+62.5	101+15	101+37.5
			OFFSET		19' RT	19' RT	21' RT
TEMPORARY CONCRETE BARRIER (70400100)	(T4)	287.5	STA.	98+37.5	98+75	101+00	101+25
			OFFSET	8.1' LT	5' LT	5' LT	2' LT
TEMPORARY CONCRETE BARRIER (70400100)	(T5)	287.5'	STA.	98+50	98+75	101+00	101+37.5
			OFFSET	14.1' LT	12' LT	12' LT	15.1' LT

0 50 100 150
SCALE IN FEET

DESIGN: SA				
DRAWN: SA				
CHECKED: RI				
APPROVED:				
DATE: 11/29/2017				
SCALE: 1" = 50'				
FILE:	NO.	BY	DATE	DESCRIPTION
	REVISIONS			

KEY PLAN:

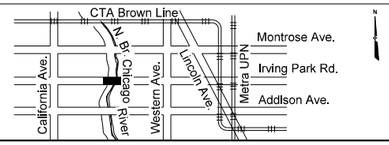

CHICAGO DEPARTMENT OF TRANSPORTATION

EJM ENGINEERING, INC.
411 South Wells Street Suite 1000
Chicago, Illinois 60607

W. IRVING PARK ROAD AT NORTH BRANCH CHICAGO RIVER

MAINTENANCE OF TRAFFIC STAGE 2

PROJECT NO. E-5-038

DRAWING NO. MOT-4

CONTRACT NO. XXXXX

...\Cadd Sheets\E5038-sht-MOT2
4/27/2018 3:11:44 PM

TOTAL SHEETS	SHEET NO.
184	22

N

A — ROAD CONSTRUCTION AHEAD — W20-1(O)-48

B — OR — SUPPLEMENTAL PLATE BLACK ON ORANGE 24" X 12"

SEE NOTE 1.

C — W21-1(O)-48

D — 30 MPH — W24-1(O) 48" X 48" PLATE(O) 20"X10"

E — W24-1R(O) 48" X 48"

F — W1-6L(O) OR W1-6L(R)

G — WORK ZONE / SPEED LIMIT 30 / PHOTO ENFORCED / $375 FINE MINIMUM — G20-5AP 24" X 18" / R2-1 24" X 30" / R10-19 24" X 18" / R2-1106-3618 24" X 18"

H — END WORK ZONE SPEED LIMIT — G20-I103-6036

I — 30 MPH — W1-3R(O) 48X48 PLATE(O) 20"X10"

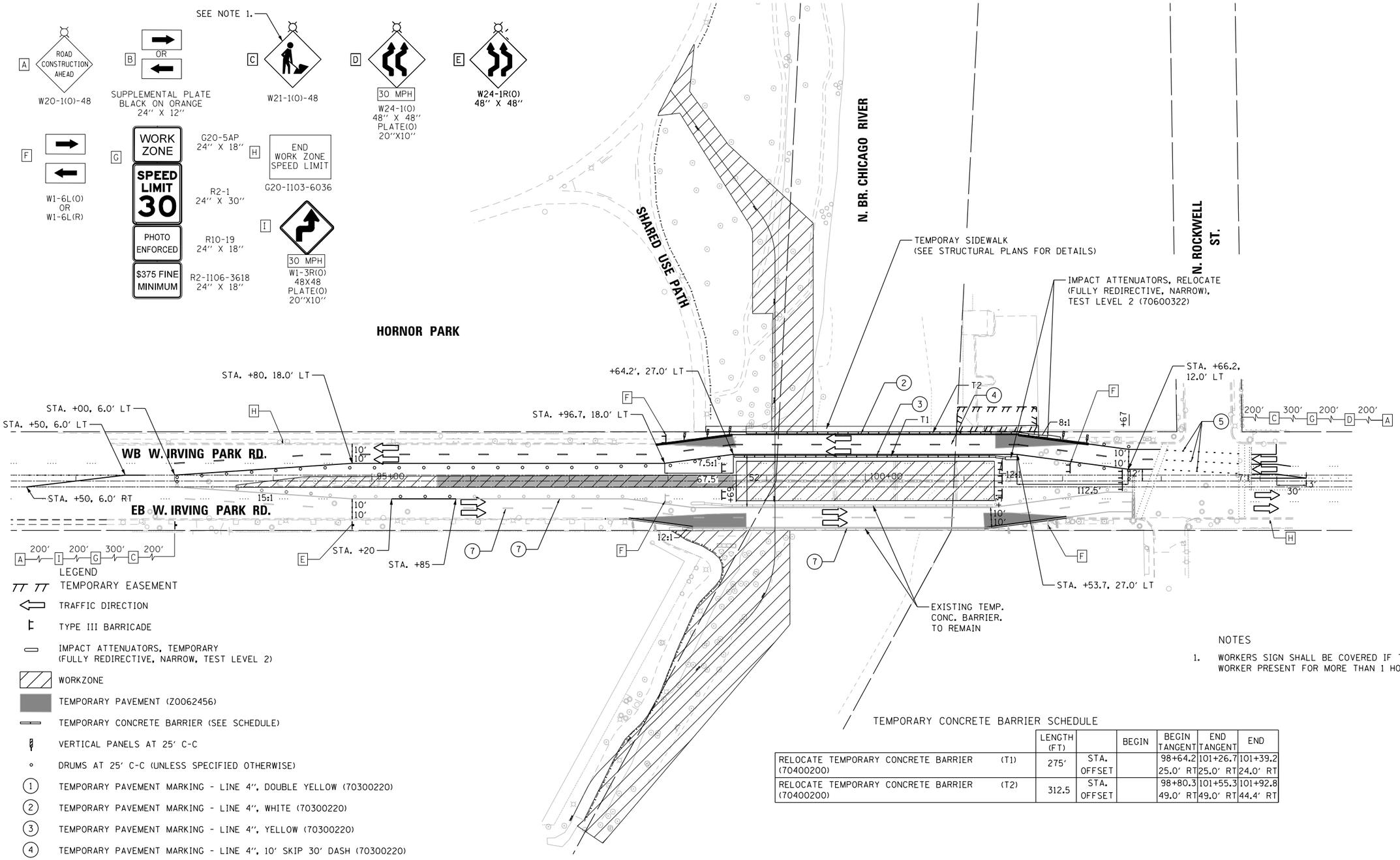

LEGEND

- TEMPORARY EASEMENT
- TRAFFIC DIRECTION
- TYPE III BARRICADE
- IMPACT ATTENUATORS, TEMPORARY (FULLY REDIRECTIVE, NARROW, TEST LEVEL 2)
- WORKZONE
- TEMPORARY PAVEMENT (Z0062456)
- TEMPORARY CONCRETE BARRIER (SEE SCHEDULE)
- VERTICAL PANELS AT 25' C-C
- DRUMS AT 25' C-C (UNLESS SPECIFIED OTHERWISE)
- (1) TEMPORARY PAVEMENT MARKING - LINE 4", DOUBLE YELLOW (70300220)
- (2) TEMPORARY PAVEMENT MARKING - LINE 4", WHITE (70300220)
- (3) TEMPORARY PAVEMENT MARKING - LINE 4", YELLOW (70300220)
- (4) TEMPORARY PAVEMENT MARKING - LINE 4", 10' SKIP 30' DASH (70300220)
- (5) TEMPORARY PAVEMENT MARKING - LINE 4", 2' SKIP 6' DASH (70300220)
- (6) TEMPORARY PAVEMENT MARKING - LINE 12", WHITE (70300260)
- (7) PAVEMENT MARKING INSTALLED IN PREVIOUS STAGE

NOTES

1. WORKERS SIGN SHALL BE COVERED IF THERE ARE NO WORKER PRESENT FOR MORE THAN 1 HOUR.

TEMPORARY CONCRETE BARRIER SCHEDULE

	LENGTH (FT)		BEGIN	BEGIN TANGENT	END TANGENT	END
RELOCATE TEMPORARY CONCRETE BARRIER (T1) (70400200)	275'	STA.		98+64.2	101+26.7	101+39.2
		OFFSET		25.0' RT	25.0' RT	24.0' RT
RELOCATE TEMPORARY CONCRETE BARRIER (T2) (70400200)	312.5	STA.		98+80.3	101+55.3	101+92.8
		OFFSET		49.0' RT	49.0' RT	44.4' RT

0 50 100 150
SCALE IN FEET

DESIGN: SA				
DRAWN: SA				
CHECKED: RI				
APPROVED:				
DATE: 11/29/2017				
SCALE: 1" = 50'				
FILE:	NO.	BY	DATE	DESCRIPTION
	REVISIONS			

KEY PLAN:

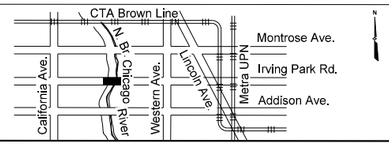

CDOT
CHICAGO DEPARTMENT OF TRANSPORTATION

EJM ENGINEERING, INC.
411 South Wells Street Suite 1000
Chicago, Illinois 60607

W. IRVING PARK ROAD AT NORTH BRANCH CHICAGO RIVER

MAINTENANCE OF TRAFFIC STAGE 3

PROJECT NO. E-5-038
DRAWING NO. MOT-5
CONTRACT NO. XXXXX

...\Cadd Sheets\E5038-sht-MOT3
11/29/2017 1:36:46 PM

TOTAL SHEETS	SHEET NO.
184	23

N

A ROAD CONSTRUCTION AHEAD — W20-1(O)-48

B OR — SUPPLEMENTAL PLATE BLACK ON ORANGE 24" X 12"

SEE NOTE 1.

C — W21-1(O)-48

D 30 MPH — W24-1(O) 48" X 48" PLATE(O) 20"X10"

E — W24-1R(O) 48" X 48"

F — W1-6L(O) OR W1-6L(R)

G WORK ZONE / SPEED LIMIT 30 / PHOTO ENFORCED / $375 FINE MINIMUM — G20-5AP 24" X 18"; R2-1 24" X 30"; R10-19 24" X 18"; R2-I106-3618 24" X 18"

H END WORK ZONE SPEED LIMIT — G20-I103-6036

I 30 MPH — W1-3R(O) 48X48 PLATE(O) 20"X10"

HORNOR PARK

SHARED USE PATH

N. BR. CHICAGO RIVER

N. ROCKWELL ST.

WB W. IRVING PARK RD.

EB W. IRVING PARK RD.

STA. +30, 6.0' LT

STA. +60, 6.0' RT

STA. +30, 6.0' LT

STA. +50, 6.0' LT

STA. +00, 18.0' LT

STA. +00, 30.0' RT

STA. +00, 27.5' LT

STA. +58.3, 30.0' LT

TEMPORARY RAMP

IMPACT ATTENUATORS, RELOCATE (FULLY REDIRECTIVE, NARROW), TEST LEVEL 2 (70600322)

IMPACT ATTENUATORS, RELOCATE (FULLY REDIRECTIVE, NARROW), TEST LEVEL 2 (70600322)

STA. +70, 3.5' RT

CONTRACTOR SHALL MAINTAIN ACCESS AT ALL TIMES

T1 T2 T3

LEGEND

- TEMPORARY EASEMENT
- TRAFFIC DIRECTION
- TYPE III BARRICADE
- IMPACT ATTENUATORS, TEMPORARY (FULLY REDIRECTIVE, NARROW, TEST LEVEL 2)
- WORKZONE
- TEMPORARY PAVEMENT (Z0062456)
- TEMPORARY CONCRETE BARRIER (SEE SCHEDULE)
- VERTICAL PANELS AT 25' C-C
- DRUMS AT 25' C-C (UNLESS SPECIFIED OTHERWISE)
- (1) TEMPORARY PAVEMENT MARKING - LINE 4", DOUBLE YELLOW (70300220)
- (2) TEMPORARY PAVEMENT MARKING - LINE 4", WHITE (70300220)
- (3) TEMPORARY PAVEMENT MARKING - LINE 4", YELLOW (70300220)
- (4) TEMPORARY PAVEMENT MARKING - LINE 4", 10' SKIP 30' DASH (70300220)
- (5) TEMPORARY PAVEMENT MARKING - LINE 4", 2' SKIP 6' DASH (70300220)
- (6) TEMPORARY PAVEMENT MARKING - LINE 12", WHITE (70300260)
- (7) PAVEMENT MARKING INSTALLED IN PREVIOUS STAGE

NOTES

1. WORKERS SIGN SHALL BE COVERED IF THERE ARE NO WORKER PRESENT FOR MORE THAN 1 HOUR.

TEMPORARY CONCRETE BARRIER SCHEDULE

		LENGTH (FT)		BEGIN	BEGIN TANGENT	END TANGENT	END
TEMPORARY CONCRETE BARRIER (70400100)	(T1)	425'			98+12.5 28.5' RT	102+37.5 28.5' RT	
RELOCATE TEMPORARY CONCRETE BARRIER (70400200)	(T1)	512.5'	STA. OFFSET	97+25 29.5' RT	97+37.5 28.5' RT	102+37.5 28.5' RT	
RELOCATE TEMPORARY CONCRETE BARRIER (70400200)	(T2)	550'	STA. OFFSET		97+00 21.5' LT	102+25 21.5' LT	102+50 23.5' RT
RELOCATE TEMPORARY CONCRETE BARRIER (70400200)	(T3)	112.5	STA. OFFSET		97+00 28.5' LT	98+12.5 28.5' RT	

0 50 100 150
SCALE IN FEET

DESIGN: SA				
DRAWN: SA				
CHECKED: RI				
APPROVED:				
DATE: 11/29/2017				
SCALE: 1" = 50'				
FILE:	NO.	BY	DATE	DESCRIPTION
	REVISIONS			

KEY PLAN: CTA Brown Line; N. Br. Chicago River; California Ave.; Western Ave.; Lincoln Ave.; Metra UPN; Montrose Ave.; Irving Park Rd.; Addison Ave.

CDOT CHICAGO DEPARTMENT OF TRANSPORTATION

EJM ENGINEERING, INC. 411 South Wells Street Suite 1000 Chicago, Illinois 60607

W. IRVING PARK ROAD AT NORTH BRANCH CHICAGO RIVER

MAINTENANCE OF TRAFFIC STAGE 4

PROJECT NO. E-5-038

DRAWING NO. MOT-6

CONTRACT NO. XXXXX

...\Cadd Sheets\E5038-sht-MOT4

4/27/2018 3:11:47 PM

TOTAL SHEETS	SHEET NO.
184	24

LEGEND

- HOT-MIX ASPHALT SURFACE REMOVAL, VARIABLE DEPTH (CDOT4400010)
- PAVEMENT REMOVAL (44000100)
- SIDEWALK REMOVAL (44000600)
- MEDIAN REMOVAL (44003100)
- WOOD CHIP TRAIL REMOVAL
- CURB REMOVAL (44000300)
- COMBINATION CURB AND GUTTER REMOVAL (44000500)
- TREE REMOVAL (6 TO 15 UNITS DIAMETER) (20100110)
- TREE REMOVAL (OVER 15 UNITS DIAMETER) (20100210)
- TEMPORARY EASEMENT AREA

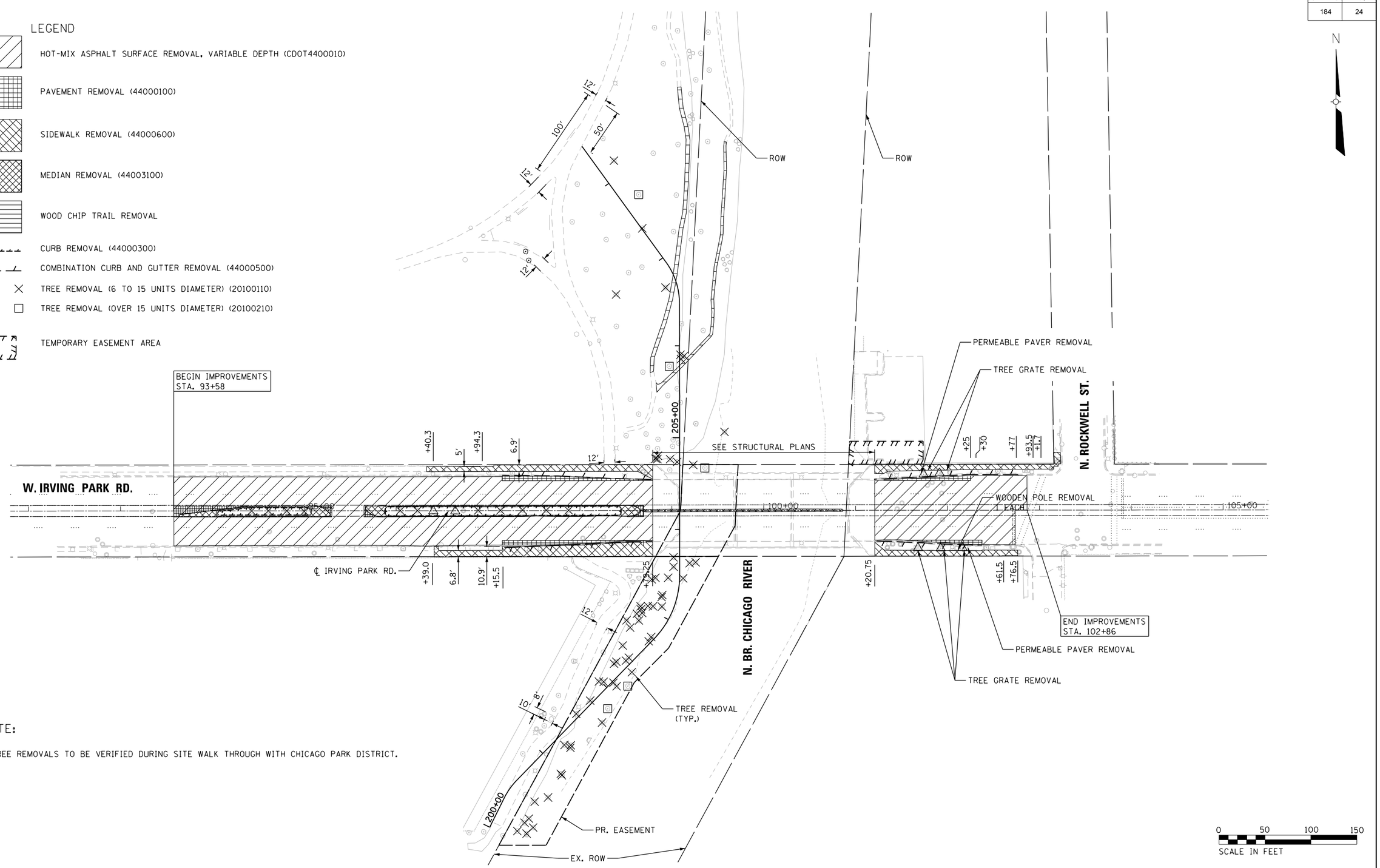

NOTE:

1. TREE REMOVALS TO BE VERIFIED DURING SITE WALK THROUGH WITH CHICAGO PARK DISTRICT.

DESIGN: SA				
DRAWN: SA				
CHECKED: RI				
APPROVED:				
DATE: 11/29/2017				
SCALE: 1" = 50'				
FILE:	NO.	BY	DATE	DESCRIPTION
	REVISIONS			

KEY PLAN:

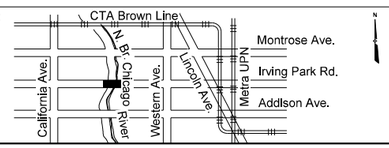

CDOT
CHICAGO DEPARTMENT OF TRANSPORTATION

EJM ENGINEERING, INC.
411 South Wells Street Suite 1000
Chicago, Illinois 60607

W. IRVING PARK ROAD AT NORTH BRANCH CHICAGO RIVER

REMOVAL PLAN

PROJECT NO. E-5-038

DRAWING NO. REM-1

CONTRACT NO. XXXXX

11/29/2017 1:36:52 PM ...\Cadd Sheets\E5038-sht-rem

TOTAL SHEETS	SHEET NO.
184	25

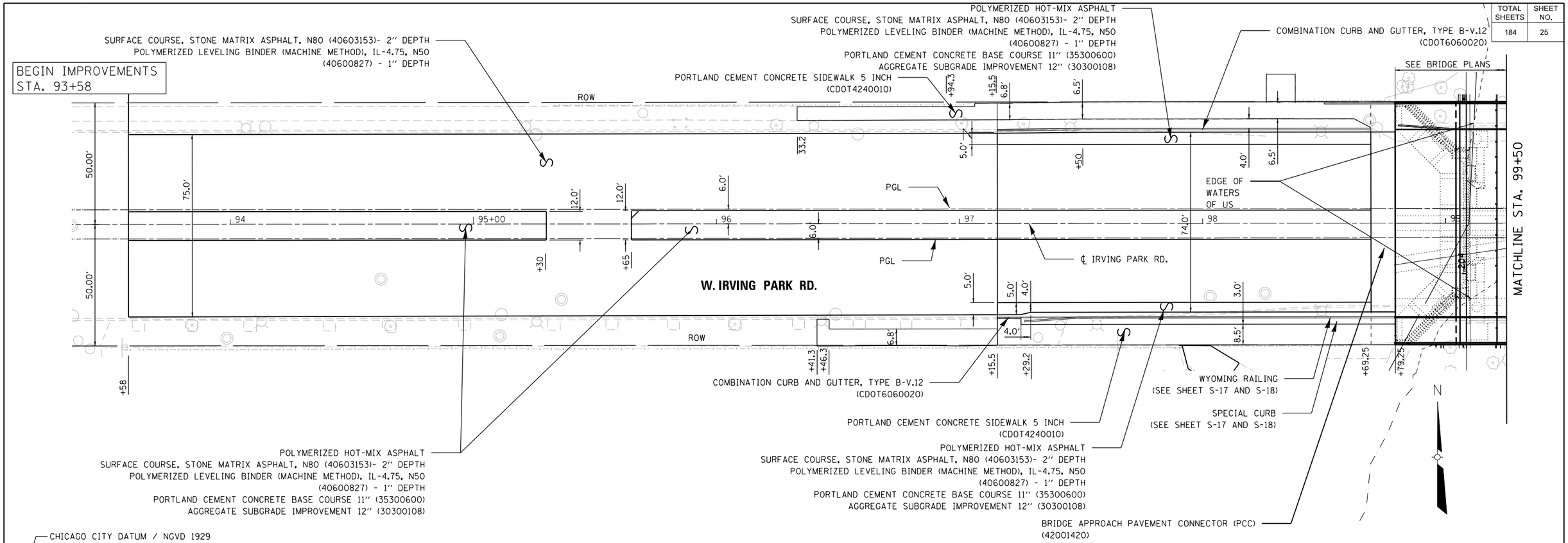

DESIGN: SA				
DRAWN: SA				
CHECKED: RPI				
APPROVED:				
DATE: 11/29/2017				
SCALE: 1"=20'				
FILE:	NO.	BY	DATE	DESCRIPTION
	REVISIONS			

KEY PLAN:

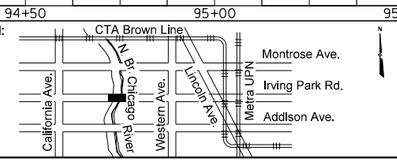

CDOT
CHICAGO DEPARTMENT OF TRANSPORTATION

EJM ENGINEERING, INC.
411 South Wells Street Suite 1000
Chicago, Illinois 60607

W. IRVING PARK ROAD
AT NORTH BRANCH
CHICAGO RIVER

PLAN AND PROFILE
IRVING PARK ROAD
STA. 93+00 TO STA. 99+50

PROJECT NO. E-5-038
DRAWING NO. RDP-1
CONTRACT NO. XXXXX

...\Cadd Sheets\E5038-sht-irv_PP1
11/29/2017 1:36:55 PM

TOTAL SHEETS	SHEET NO.
184	26

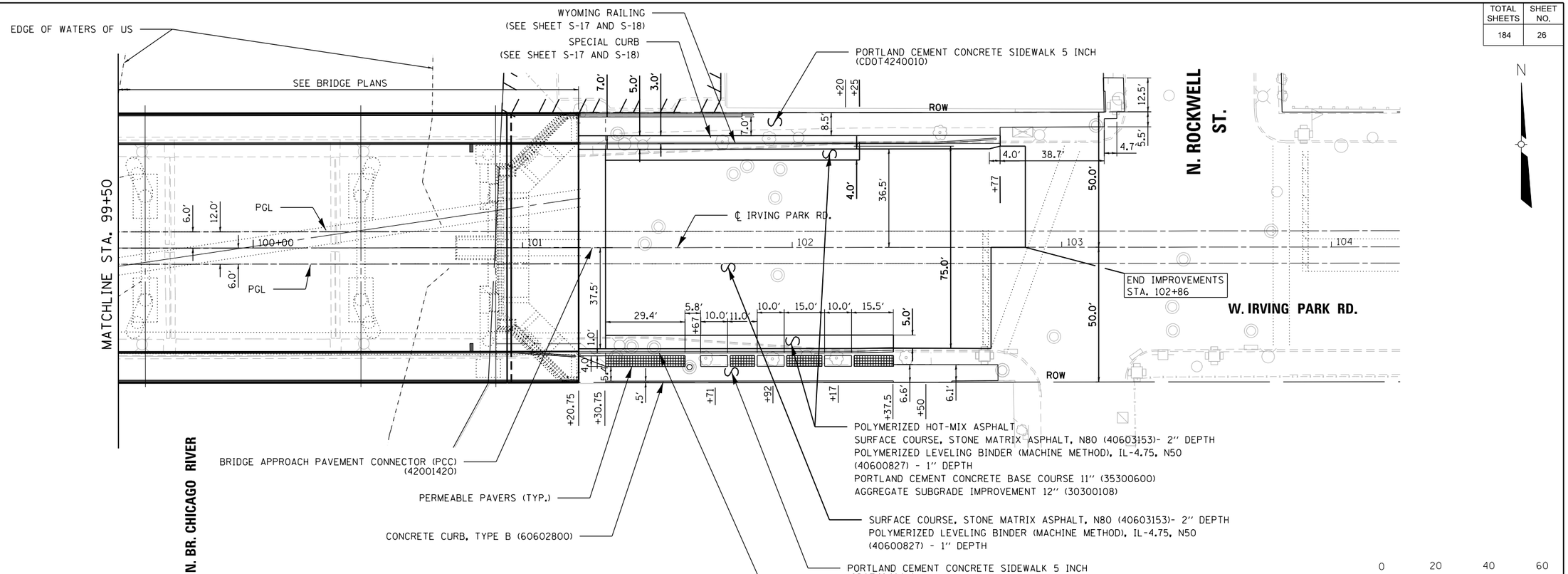

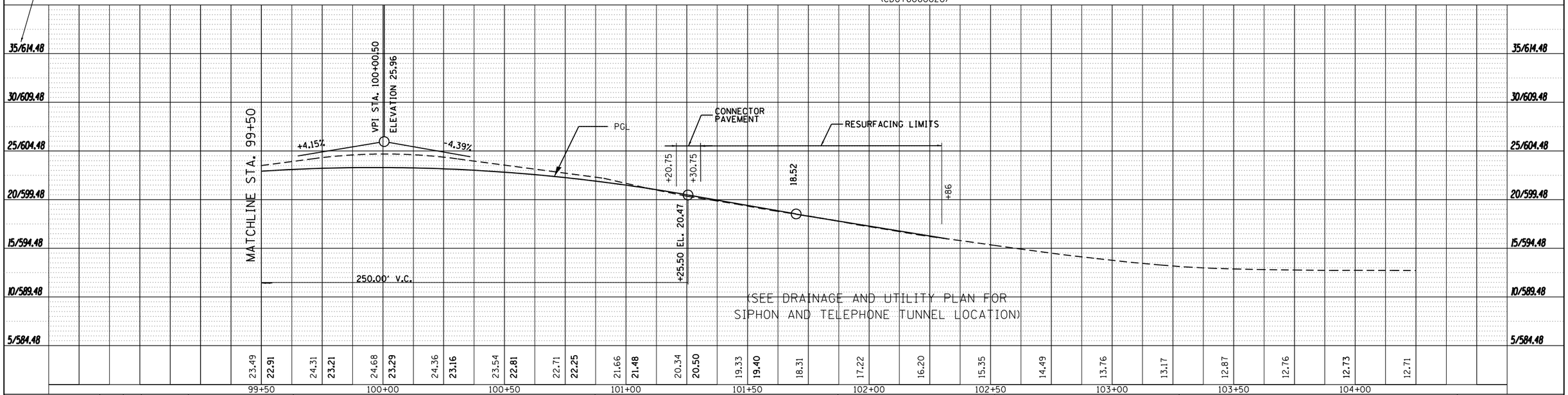

...\Cadd Sheets\E5038-sht-lrv_PP2
11/29/2017 1:36:59 PM

DESIGN: SA				
DRAWN: SA				
CHECKED: RPI				
APPROVED:				
DATE: 11/29/2017				
SCALE: 1" = 20'				
FILE:	NO.	BY	DATE	DESCRIPTION
	REVISIONS			

KEY PLAN:

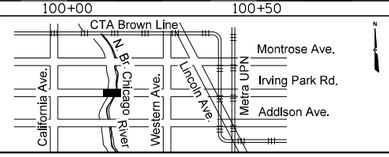

CDOT
CHICAGO DEPARTMENT OF TRANSPORTATION

EJM ENGINEERING, INC.
411 South Wells Street Suite 1000
Chicago, Illinois 60607

W. IRVING PARK ROAD AT NORTH BRANCH CHICAGO RIVER

PLAN AND PROFILE IRVING PARK ROAD

STA. 99+50 TO STA. 104+25

PROJECT NO. E-5-038

DRAWING NO. RDP–2

CONTRACT NO. XXXXX

CROSS-SLOPE TRANSITION ELEVATIONS			
STA.	SLOPE	PGL EL.	OUTSIDE EOP EL.
202+05.00	-1.00%	11.58	11.46
202+10.00	-0.33%	11.42	11.38
202+15.00	0.33%	11.27	11.31
202+20.00	1.00%	11.11	11.23
203+45.48	1.00%	7.55	7.67
203+50.48	0.33%	7.49	7.53
203+55.48	-0.33%	7.44	7.40
203+60.48	-1.00%	7.41	7.29

TOTAL SHEETS	SHEET NO.
184	27

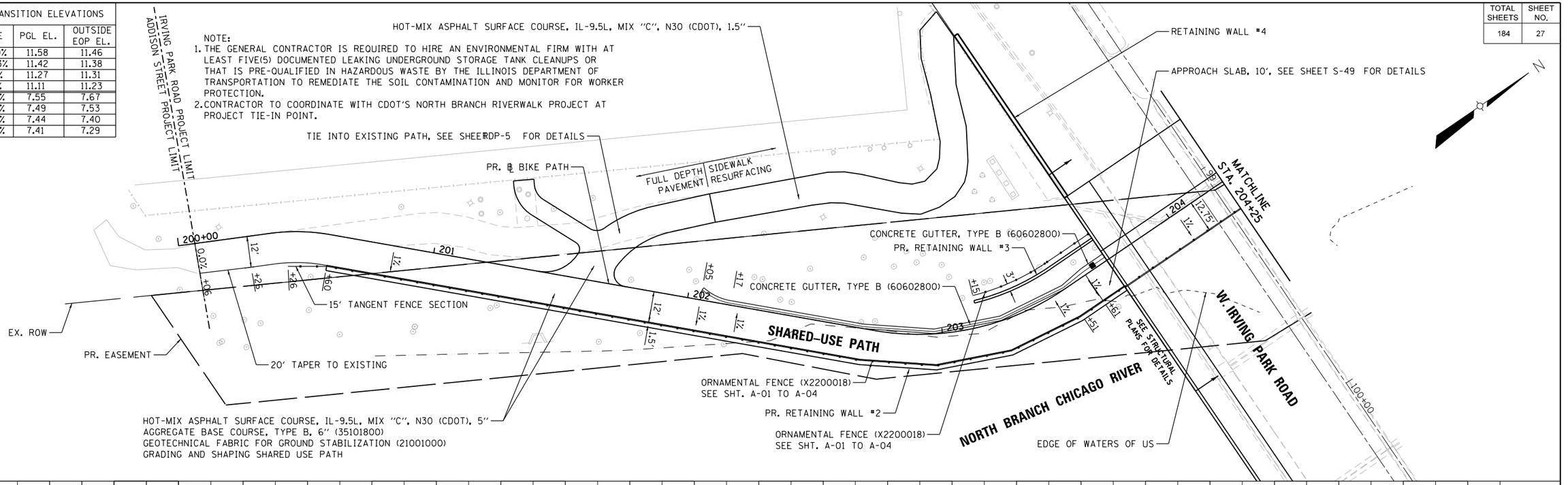

DESIGN:	BJD			
DRAWN:	BJD			
CHECKED:	SA			
APPROVED:				
DATE:	11/29/2017			
SCALE:	1" = 20'			
FILE:		NO.	BY	DATE
		REVISIONS		

KEY PLAN:

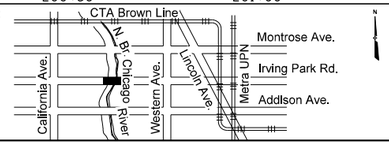

CDOT
CHICAGO DEPARTMENT OF TRANSPORTATION

EJM ENGINEERING, INC.
411 South Wells Street Suite 1000
Chicago, Illinois 60607

W. IRVING PARK ROAD AT NORTH BRANCH CHICAGO RIVER

PLAN AND PROFILE SHARED-USE PATH

STATION 200+00 TO STATION 204+25

PROJECT NO. E-5-038

DRAWING NO. RDP-3

CONTRACT NO. XXXXX

...\Cadd Sheets\E5038-sht-path_PP1
4/27/2018 3:11:50 PM

TOTAL SHEETS	SHEET NO.
184	28

CROSS-SLOPE TRANSITION ELEVATIONS			
STA.	SLOPE	PGL EL.	OUTSIDE EOP EL.
206+36.55	-1.00%	14.21	14.09
206+41.55	-0.33%	14.43	14.39
206+46.55	0.33%	14.65	14.69
206+51.55	1.00%	14.88	15.00

NOTE:
1. THE GENERAL CONTRACTOR IS REQUIRED TO HIRE AN ENVIRONMENTAL FIRM WITH AT LEAST FIVE (5) DOCUMENTED LEAKING UNDERGROUND STORAGE TANK CLEANUPS OR THAT IS PRE-QUALIFIED IN HAZARDOUS WASTE BY THE ILLINOIS DEPARTMENT OF TRANSPORTATION TO REMEDIATE THE SOIL CONTAMINATION AND MONITOR FOR WORKER PROTECTION.

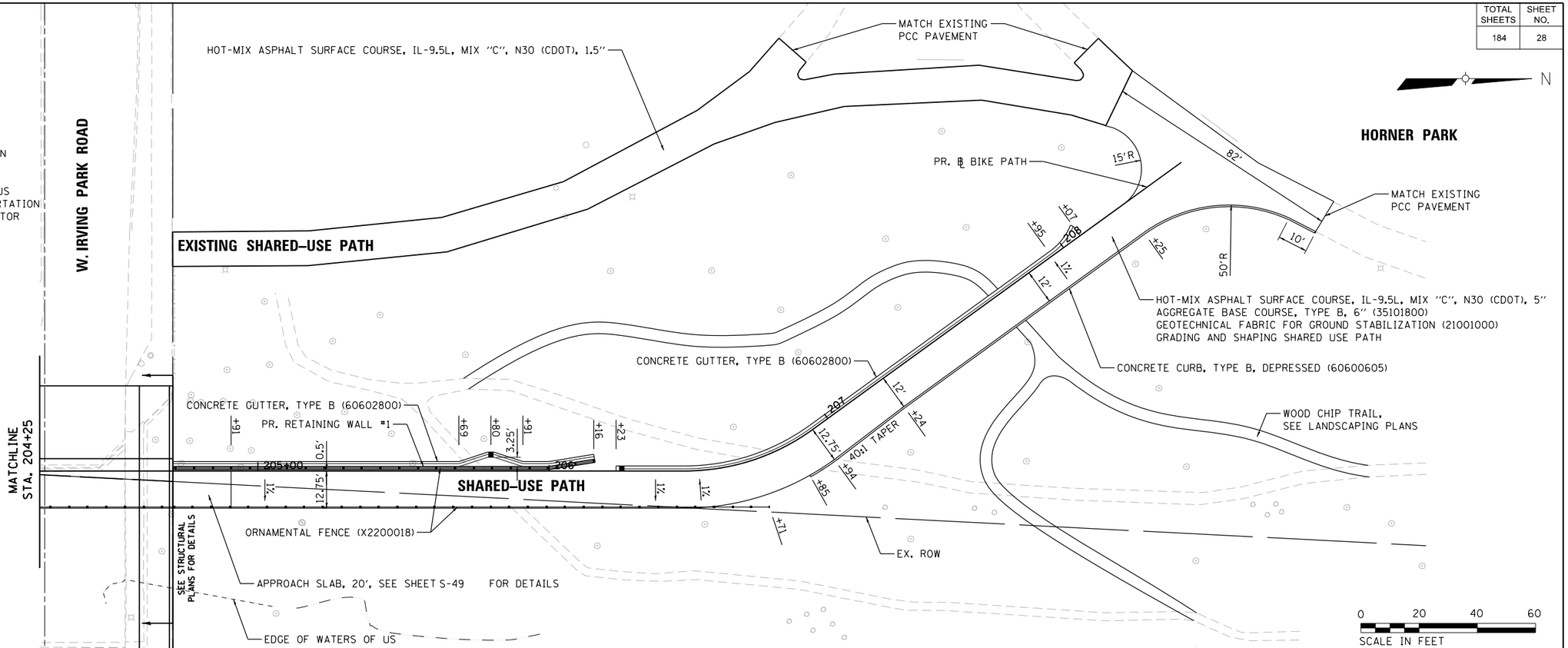

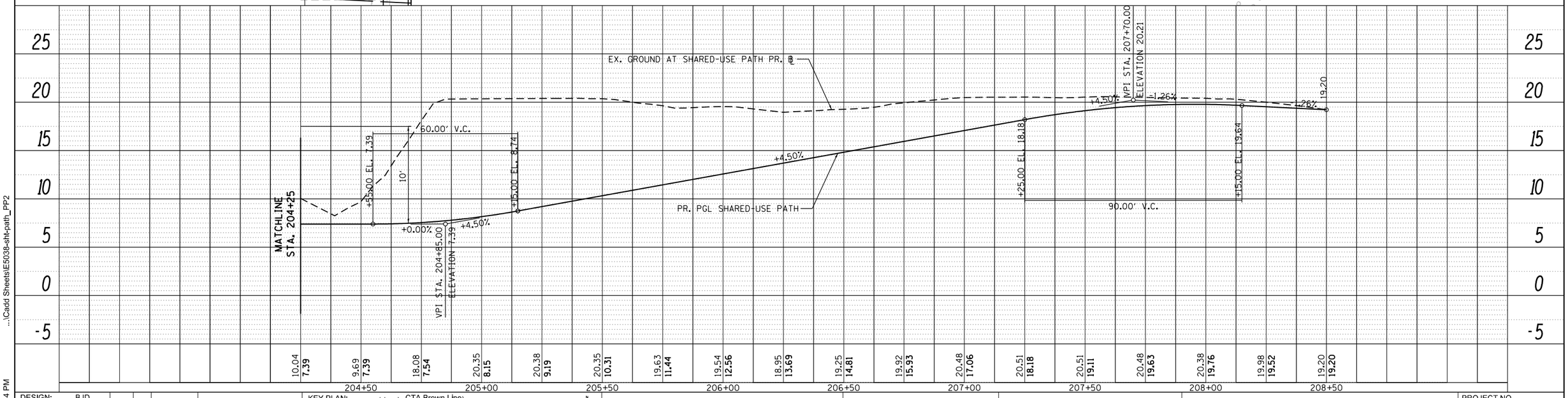

DESIGN:	BJD			
DRAWN:	BJD			
CHECKED:	SA			
APPROVED:				
DATE:	11/29/2017			
SCALE:	1" = 20'			
FILE:		NO.	BY	DATE
		REVISIONS		

KEY PLAN:

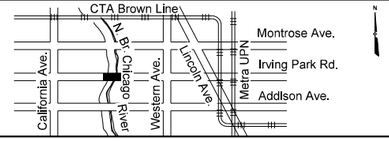

CDOT
CHICAGO DEPARTMENT OF TRANSPORTATION

EJM ENGINEERING, INC.
411 South Wells Street Suite 1000
Chicago, Illinois 60607

W. IRVING PARK ROAD AT NORTH BRANCH CHICAGO RIVER

PLAN AND PROFILE SHARED-USE PATH

STATION 204+00 TO STATION 207+95

PROJECT NO. E-5-038

DRAWING NO. RDP-4

CONTRACT NO. XXXXX

...\Cadd Sheets\E5038-sht-path_PP2
1/30/2018 3:14:44 PM

TOTAL SHEETS	SHEET NO.
184	29

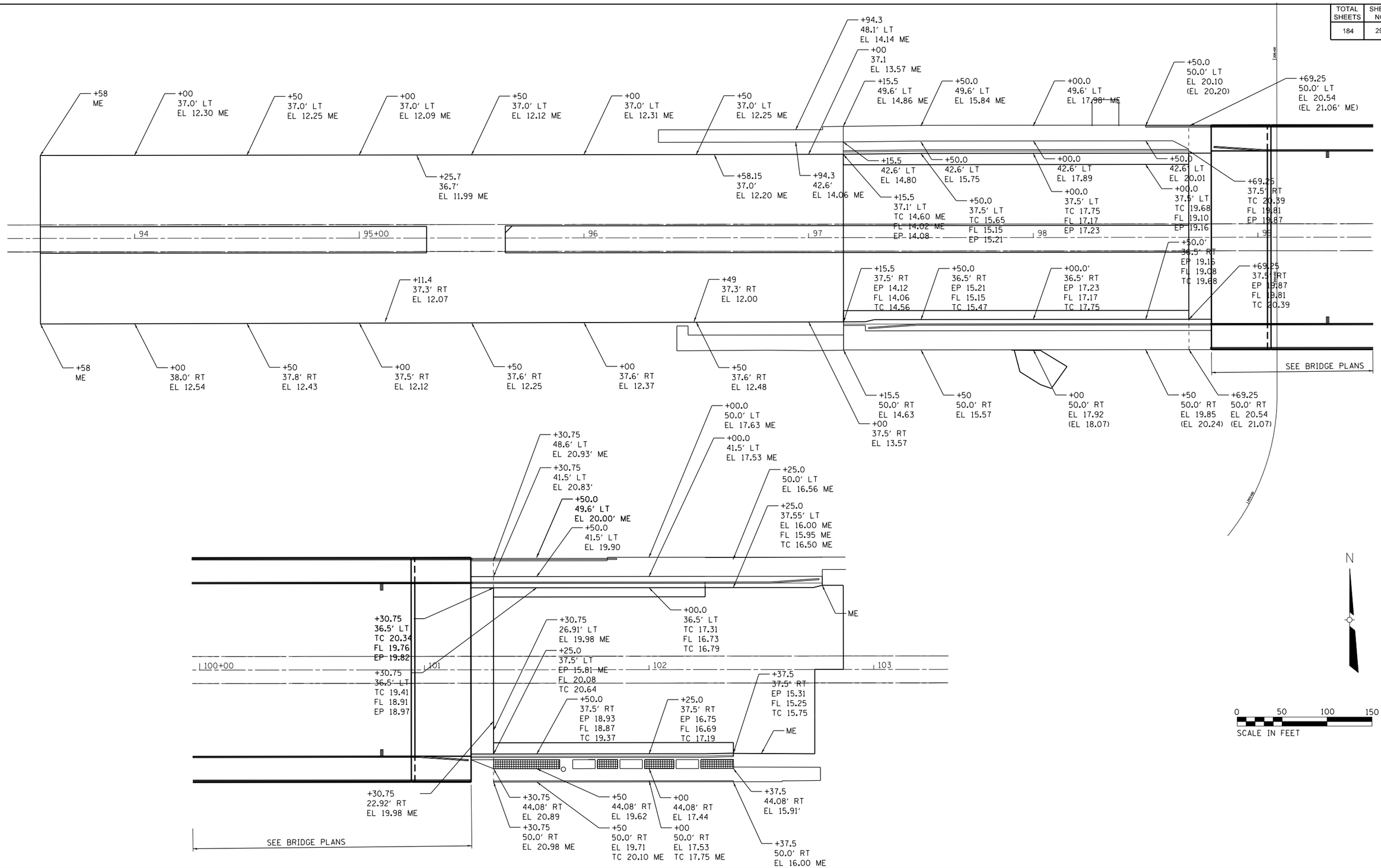

DESIGN:				
DRAWN:				
CHECKED:				
APPROVED:				
DATE: 11/29/2017				
SCALE: 1" = 50'				
FILE:	NO.	BY	DATE	DESCRIPTION
	REVISIONS			

KEY PLAN:

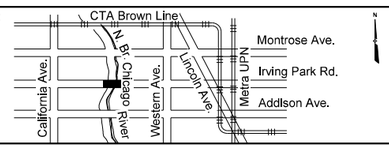

CDOT
CHICAGO DEPARTMENT OF TRANSPORTATION

EJM ENGINEERING, INC.
411 South Wells Street Suite 1000
Chicago, Illinois 60607

W. IRVING PARK ROAD AT NORTH BRANCH CHICAGO RIVER

IRVING PARK ROAD ELEVATION DETAILS

PROJECT NO. E-5-038

DRAWING NO. RDP–5

CONTRACT NO. XXXXX

...\E5038-sht-Irv_elevDet.dgn
11/29/2017 1:37:08 PM

NOTE: MAINTAIN 1% SLOPE FOR 10' WEST OF PATH BASELINE.

TOTAL SHEETS	SHEET NO.
184	30

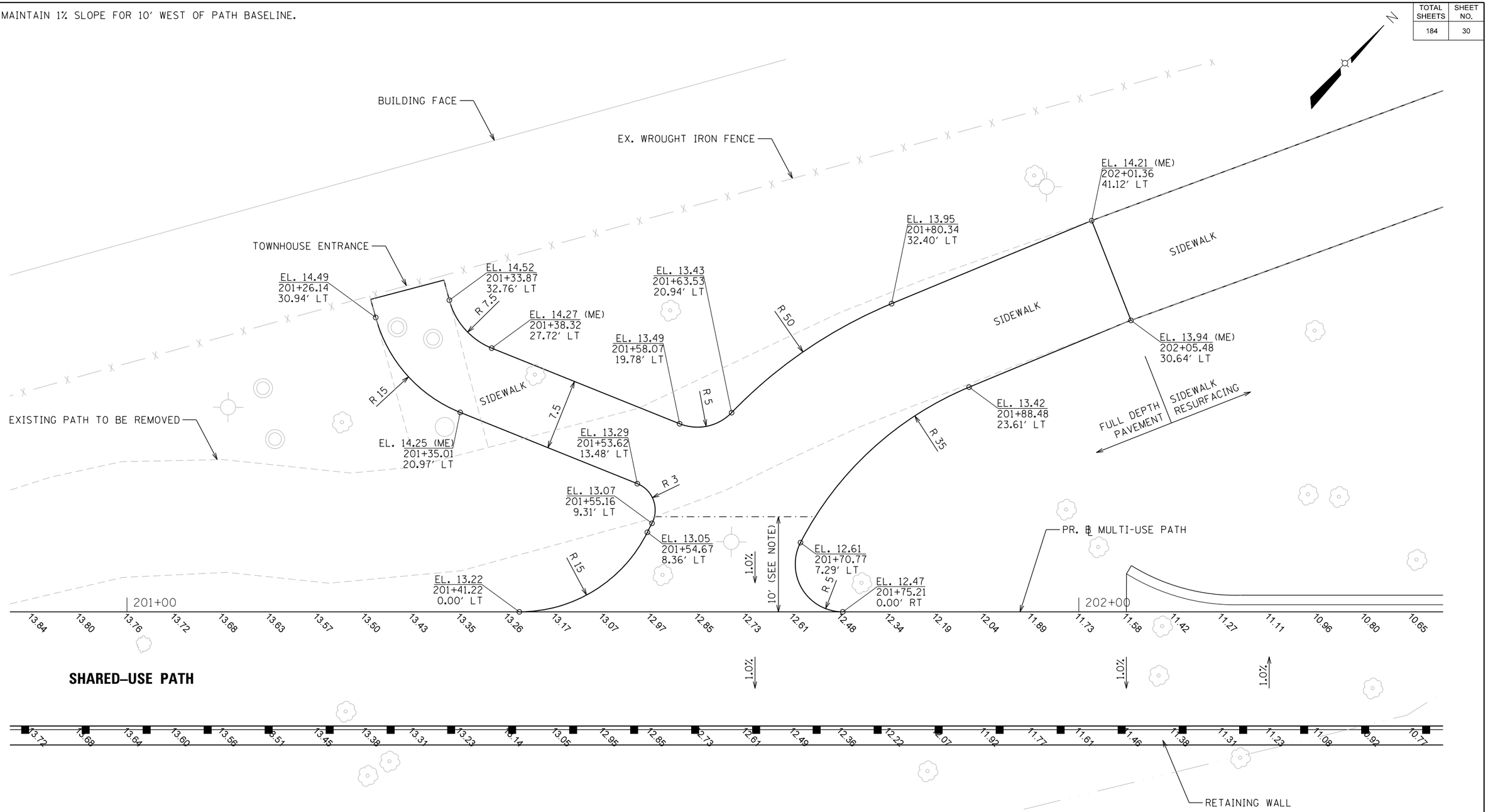

0 5 10 15
SCALE IN FEET

DESIGN:	BJD			
DRAWN:	BJD			
CHECKED:	SA			
APPROVED:				
DATE:	11/29/2017			
SCALE:	1"=5'			
FILE:		NO.	BY	DATE
		REVISIONS		

KEY PLAN:

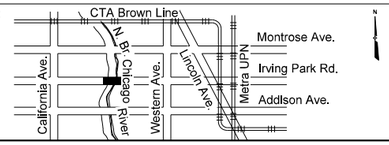

CDOT
CHICAGO DEPARTMENT OF TRANSPORTATION

EJM ENGINEERING, INC.
411 South Wells Street Suite 1000
Chicago, Illinois 60607

W. IRVING PARK ROAD AT NORTH BRANCH CHICAGO RIVER

PATH PAVEMENT ELEVATION DETAILS AT SOUTH TIE-IN

PROJECT NO. E-5-038
DRAWING NO. RDP-5
CONTRACT NO. XXXXX

...\E5038-sht-pathelev.dgn
11/29/2017 1:37:10 PM

TOTAL SHEETS	SHEET NO.
184	31

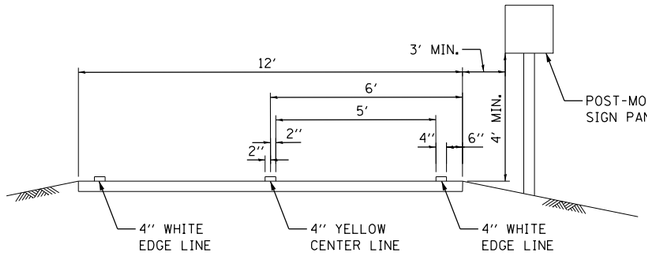

TYPICAL SECTION - PATH SIGNS AND PAVEMENT MARKINGS

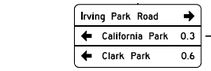

SIGN NAME: WAYFINDING-SB
STA. 208+50

THERMOPLASTIC PAVEMENT MARKING - LINE 4" (78000200)
SOLID YELLOW CENTER LINE

THERMOPLASTIC PAVEMENT MARKING - LINE 4" (78000200)
SOLID WHITE EDGE LINE (TYP.)

LEGEND:
- SIGN PANEL EXISTING TO REMAIN
- REMOVE AND REPLACE SIGN PANEL
- PROPOSED SIGN PANEL

N

0 50 100 150
SCALE IN FEET

℄ SHARED-USE PATH

THERMOPLASTIC PAVEMENT MARKING - LINE 12" (78000600)
SOLID YELLOW LINE (TYP.)
45°, 20' C-C

THERMOPLASTIC PAVEMENT MARKING - LINE 4" (78000200)
SKIP-DASH WHITE LINE (TYP.)
10' DASH, 30' SPACE

STA. 92+94

STA. 94+07

STA. 95+22

STA. 96+40

STA. 97+46

STA. 98+49

11'-10"
6'-6"
14"

205+00

+47

+69

STA. 100+41

8.5'

STA. 102+02

THERMOPLASTIC PAVEMENT MARKING - LINE 4" (78000200)
DOUBLE YELLOW LINE (TYP.)
8" C-C

THERMOPLASTIC PAVEMENT MARKING - LINE 6" (78000400)
SOLID WHITE LINE

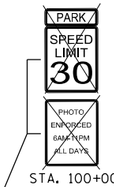

STA. 100+00

North Branch
Chicago River

SIGN NAME: RIVER
STA. 98+74

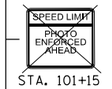

STA. 101+15

N. ROCKWELL ST.

WB W. IRVING PARK RD.

10:1 TAPER

95+00

100+00

105+00

EB W. IRVING PARK RD.

℄ IRVING PARK RD.

19.5'
12'
12'
12'

+25
+30
+58

STA. 92+66

STA. 94+13

+50

STA. 95+26

STA. 96+43

STA. 97+56

STA. 98+49

SIGN NAME: RIVER
STA. 98+74

North Branch
Chicago River

+79

+41

+75

LEFT EDGE
LINE OMISSION

N. BR. CHICAGO RIVER

SIGN NAME: CSO-2
LOCATION: MOUNT BELOW BRIDGE ON PROPOSED ABUTMENT WALL NEAR OUTLET.
MOUNTING: EXPANSION BOLTS, DRILL AND GROUT, 3/8" DIA. STAINLESS STEEL BOLTS. COST INCIDENTAL TO SIGN PANEL INSTALLATION.

200+00

+06

Irving Park Rd.
Horner Park

SIGN NAME: WAYFINDING-NB
R9-6
STA. 200+46

R9-6
STA. 202+78

POLYUREA PAVEMENT MARKING
TO BE USED ON BRIDGE DECK
(SEE PAVEMENT MARKING
SCHEDULE FOR LIMITS)

+16

8.5'

+31

+21

+53

STA. 100+41

+72

STA. 102+05

STA. 102+71

THERMOPLASTIC PAVEMENT MARKING - LINE 24" (78000650)
SOLID WHITE LINE

THERMOPLASTIC PAVEMENT MARKING - LETTERS AND SYMBOLS (78000100)
WHITE LEFT TURN ARROW AND ONLY SYMBOL

THERMOPLASTIC PAVEMENT MARKING - LINE 6" (78000400)
DOTTED WHITE LINE (TYP.)
2' DOT, 6' SPACE

THERMOPLASTIC PAVEMENT MARKING - LINE 6" (78000400)
SOLID WHITE LINE (TYP.)
45°, 20' C-C

THERMOPLASTIC PAVEMENT MARKING - LINE 6" (78000400)
SOLID WHITE LINE (TYP.)

SIGN NAME: CSO-1
LOCATION: MOUNT BELOW BRIDGE ON PROPOSED ABUTMENT WALL NEAR OUTLET.
MOUNTING: EXPANSION BOLTS, DRILL AND GROUT, 3/8" DIA. STAINLESS STEEL BOLTS. COST INCIDENTAL TO SIGN PANEL INSTALLATION.

NOTE: PAVEMENT MARKING DIMENSIONS ARE TO CENTER OF STRIPE

...\Cadd Sheets\E5038-sht-pmk
11/29/2017 1:37:13 PM

DESIGN:	BJD			
DRAWN:	BJD			
CHECKED:	SA			
APPROVED:				
DATE:	11/29/2017			
SCALE:	1" = 50'			
FILE:	NO.	BY	DATE	DESCRIPTION
	REVISIONS			

KEY PLAN:

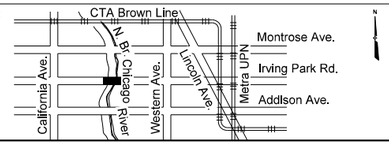

CDOT
CHICAGO DEPARTMENT OF TRANSPORTATION

EJM ENGINEERING, INC.
411 South Wells Street Suite 1000
Chicago, Illinois 60607

W. IRVING PARK ROAD AT NORTH BRANCH CHICAGO RIVER

SIGNING AND PAVEMENT MARKING PLAN

PROJECT NO.	E-5-038
DRAWING NO.	PMK-1
CONTRACT NO.	XXXXX

TOTAL SHEETS	SHEET NO.
184	32

								THERMOPLASTIC							POLYUREA					
SHEET ID	ALIGNMENT	BEGIN STATION	BEGIN OFFSET (LT/RT)	END STATION	END OFFSET (LT/RT)	LENGTH (FT)	Multiplier	78000100 LETTERS AND SYMBOLS (WHITE)	78000200 LINE 4" (WHITE) - SOLID	78000200 LINE 4" (WHITE) - 10' DASH, 30' SKIP	78000200 LINE 4" (YELLOW) - SOLID	78000400 LINE 6" (WHITE) - SOLID	78000600 LINE 12" (YELLOW) - SOLID	78000650 LINE 24" (WHITE) - SOLID	78008210 LINE 4" (YELLOW) SOLID	78008210 LINE 4" (WHITE) - 10' DASH, 30' SKIP	78008220 LINE 6" (WHITE) - SOLID	78008220 LINE 6" (WHITE) - 2' DOT, 6' SKIP	78008250 LINE 12" (YELLOW) - SOLID	NOTES
								SQ FT	FT	FT	FT	FT	FT	FT	FT	FT	FT	FT	FT	
PMK-1	IRVING PARK RD.	93+25	6 RT	98+79	6 RT	554.3	2.00				1108.5									DOUBLE YELLOW
PMK-1	IRVING PARK RD.	98+79	6 RT	100+16	6 RT	136.8	2.00								273.5					DOUBLE YELLOW
PMK-1	IRVING PARK RD.	93+30	6 RT	94+50	6 LT	120.6	2.00				241.2									DOUBLE YELLOW
PMK-1	IRVING PARK RD.	93+46	6 RT	98+79	6 LT	425.0	1.00						425.0							MEDIAN STRIPING
PMK-1	IRVING PARK RD.	98+79	6 RT	100+99	6 LT	153.0	1.00												153.0	MEDIAN STRIPING
PMK-1	IRVING PARK RD.	93+58	18 RT	98+79	18 RT	521.3	0.25			130.3										SKIP DASH
PMK-1	IRVING PARK RD.	98+79	18 RT	101+21	18 RT	241.5	0.25									60.4				SKIP DASH
PMK-1	IRVING PARK RD.	101+21	18 RT	102+71	18 RT	150.3	0.25			37.6										SKIP DASH
PMK-1	IRVING PARK RD.	93+58	18 LT	98+79	18 LT	521.3	0.25			130.3										SKIP DASH
PMK-1	IRVING PARK RD.	98+79	18 LT	101+21	18 LT	241.5	0.25									60.4				SKIP DASH
PMK-1	IRVING PARK RD.	101+21	18 LT	102+71	18 LT	150.3	0.25			37.6										SKIP DASH
PMK-1	IRVING PARK RD.	94+50	6 LT	98+79	6 LT	429.3	2.00				858.5									DOUBLE YELLOW
PMK-1	IRVING PARK RD.	98+79	6 LT	101+21	6 LT	241.5	2.00								483.0					DOUBLE YELLOW
PMK-1	IRVING PARK RD.	101+21	6 LT	102+73	6 LT	152.3	2.00				304.5									DOUBLE YELLOW
PMK-1	IRVING PARK RD.	98+47	VARIES RIGHT	98+79	VARIES RIGHT	33.7	1.00					33.7								EDGE LINE (BUMP-OUT)
PMK-1	IRVING PARK RD.	98+79		101+21		241.5	1.00										241.5			EDGE LINE (BUMP-OUT)
PMK-1	IRVING PARK RD.	101+21		101+53		33.7	1.00					33.7								EDGE LINE (BUMP-OUT)
PMK-1	IRVING PARK RD.	98+47	VARIES LEFT	98+79	VARIES LEFT	33.7	1.00					33.7								EDGE LINE (BUMP-OUT)
PMK-1	IRVING PARK RD.	98+79		101+21		241.5	1.00										241.5			EDGE LINE (BUMP-OUT)
PMK-1	IRVING PARK RD.	101+21		101+53		33.7	1.00					33.7								EDGE LINE (BUMP-OUT)
PMK-1	IRVING PARK RD.	98+51	30 RT	101+38	30 RT	165.2	1.00										165.2			DIAGONALS WHITE
PMK-1	IRVING PARK RD.	98+62	30 LT	101+49	30 LT	165.2	1.00										165.2			DIAGONALS WHITE
PMK-1	IRVING PARK RD.	100+16	6 RT	101+21	4.5 LT	105.6	2.00								211.2					DOUBLE YELLOW
PMK-1	IRVING PARK RD.	101+21	4.5 LT	101+36	6 LT	15.0	2.00				30.0									DOUBLE YELLOW
PMK-1	IRVING PARK RD.	100+16	6 RT	101+36	6 RT	120.0	0.25											30.0		DOTTED
PMK-1	IRVING PARK RD.	101+36	6 RT	102+71	6 RT	135.0	1.00					135.0								LEFT TURN LANE
PMK-1	IRVING PARK RD.	101+46	VARIES	101+78	VARIES			30.1												"ONLY" AND LEFT TURN ARROW
PMK-1	IRVING PARK RD.	102+72	6 LT	102+72	37.4 RT	43.4	1.00							43.4						STOP BAR
PMK-1	SHARED-USE PATH	200+07	6 RT	208+25	6 RT	818.0	1.00				818.0									PATH CENTERLINE
PMK-1	SHARED-USE PATH	200+07	0.7 RT	201+41	0.7 RT	134.00	1.00		134.0											PATH EDGE LINE
PMK-1	SHARED-USE PATH	201+75	0.7 RT	208+25	0.7 RT	650.00	1.00		650.0											PATH EDGE LINE
PMK-1	SHARED-USE PATH	200+07	11.3 RT	208+25	11.3 RT	818.0	1.00		818.0											PATH EDGE LINE
							TOTALS	30	1602	336	3361	270	425	43	968	121	813	30	153	

SIGN SCHEDULE

SHEET	LEGEND	ALIGNMENT	LT/RT	EXISTING STATION	EXISTING MOUNT	PROPOSED STATION	PROPOSED MOUNT	Code	SIGN WIDTH (IN)	SIGN HEIGHT (IN)	AREA (SQ. FT.)	PAY ITEMS (SEE LEGEND) A	B	C	D	E	F	G	H
PMK-1	GORDON TECH DR.	IRVING PARK RD	LT	97+46	LP	-	-		18	6	0.75	1							
PMK-1	NPTZ	IRVING PARK RD	LT	98+49	LP	98+49	SP	R7-201-5	18	18	2.25	1			2.25	1		1	
PMK-1	SL-30	IRVING PARK RD	LT	100+00	SP	100+00	SP	SPECIAL	24	36	6.00		1	6.00		1	1		
PMK-1	PHOTO ENF.	IRVING PARK RD	LT	100+00	SP	100+00	SP	SPECIAL	24	30	5.00	1		5.00			1		
PMK-1	NPTZ	IRVING PARK RD	LT	100+41	LP	100+41	SP	R7-201-5	18	18	2.25	1			2.25	1		1	
PMK-1	PHOTO ENF. AH.	IRVING PARK RD	LT	101+15	SP	101+15	SP	SPECIAL	24	24	4.00		1	4.00		1	1		
PMK-1	RIVER	IRVING PARK RD	LT	-	-	101+15	SP	CUSTOM	42	18	5.25			5.25			1		
PMK-1	NPTZ	IRVING PARK RD	LT	102+02	LP	102+40	SP	R7-201-5	18	18	2.25	1			2.25	1		1	
PMK-1	SIGNAL	IRVING PARK RD	RT	97+56	LP	97+56	SP	W3-3	36	36	9.00	1		9.00		1	1		
PMK-1	AHEAD	IRVING PARK RD	RT	97+56	LP	97+56	SP	SPECIAL	18	12	1.50	1		1.50			1		
PMK-1	NPTZ	IRVING PARK RD	RT	98+49	LP	98+49	SP	R7-201-5	18	18	2.25	1			2.25	1		1	
PMK-1	RIVER	IRVING PARK RD	RT	-	-	98+49	SP	CUSTOM	42	18	5.25			5.25			1		
PMK-1	NPTZ	IRVING PARK RD	RT	100+41	LP	100+41	SP	R7-201-5	18	18	2.25	1			2.25	1		1	
PMK-1	NPTZ	IRVING PARK RD	RT	102+05	LP	102+26	SP	R7-201-5	18	18	2.25	1			2.25	1		1	
PMK-1	CUBS PARKING	IRVING PARK RD	RT	102+05	LP	102+26	SP	SPECIAL	18	24	3.00	1		3.00			1		
PMK-1	ARROW RIGHT	IRVING PARK RD	RT	102+05	LP	102+26	SP	SPECIAL	12	6	0.50	1		0.50			1		
PMK-1	WAYFINDING-NB	SHARED-USE PATH	RT	-	-	200+46	WP	CUSTOM	30	12	2.50			2.5			1		9.5
PMK-1	YIELD TO PEDS	SHARED-USE PATH	RT	-	-	200+46	WP	R9-6	12	18	1.50			1.5			1		
PMK-1	YIELD TO PEDS	SHARED-USE PATH	LT	-	-	202+78	WP	R9-6	12	18	1.50			1.5			1		8.5
PMK-1	WAYFINDING-SB	SHARED-USE PATH	RT	-	-	208+50	WP	CUSTOM	36	18	4.50			4.5			1		8.5
PMK-1	CSO-1	UNDER BRIDGE AT COMBINED SEWER OUTFLOW - EAST SIDE						SPECIAL	18	24	3.00			3					
PMK-1	CSO-2	UNDER BRIDGE AT COMBINED SEWER OUTFLOW - WEST SIDE						SPECIAL	18	24	3.00			3					
											TOTALS	12	2	55.5	13.5	9	13	6	26.5

SIGNING PAY ITEM LEGEND

A. REMOVE EXISTING SIGN PANEL AND SALVAGE (EA.)
B. REMOVE EXISTING SIGN PANEL AND POLE ASSEMBLY, FROM SIDEWALK, AND SALVAGE (EA.)
C. FURNISH SIGN PANEL, TYPE 1, REFLECTIVE, TYPE A, SINGLE-SIDED (SQ. FT.)
D. FURNISH SIGN PANEL, TYPE 1, REFLECTIVE, TYPE A, DOUBLE-SIDED (SQ. FT.)
E. FURNISH AND INSTALL POLE, DRILL METHOD (EA.)
F. INSTALL SIGN PANEL TY. 1, CENTER MOUNT ON SIGN POLE (EA.)
G. INSTALL SIGN PANEL TY. 1, FLAG MOUNT ON SIGN POLE (EA.)
H. WOOD SIGN SUPPORT (FT.) (73000100)

...\Cadd Sheets\E5038-sht-pmk2.dgn
11/29/2017 1:37:17 PM

DESIGN:	BJD				
DRAWN:	BJD				
CHECKED:	SA				
APPROVED:					
DATE:	11/29/2017				
SCALE:	NTS				
FILE:		NO.	BY	DATE	DESCRIPTION
		REVISIONS			

KEY PLAN:

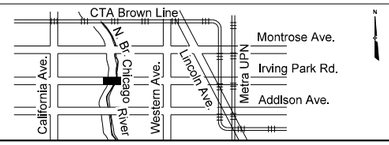

CDOT CHICAGO DEPARTMENT OF TRANSPORTATION

EJM ENGINEERING, INC.
411 South Wells Street Suite 1000
Chicago, Illinois 60607

W. IRVING PARK ROAD AT NORTH BRANCH CHICAGO RIVER

SIGNING AND PAVEMENT MARKING SCHEDULE

PROJECT NO. E-5-038
DRAWING NO. PMK–2
CONTRACT NO. XXXXX

TOTAL SHEETS	SHEET NO.
184	33

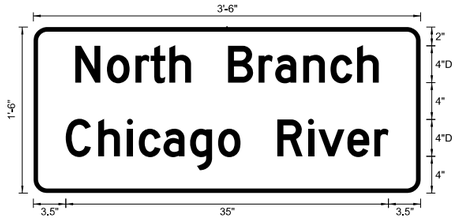

SIGN NUMBER	RIVER
WIDTH x HGHT.	3'-6" x 1'-6"
BORDER WIDTH	0.5"
CORNER RADIUS	1.5"
MOUNTING	Ground
BACKGROUND	TYPE: Reflective
	COLOR: Green
LEGEND/BORDER	TYPE: Reflective
	COLOR: White/White

SYMBOL	ROT	X	Y	WID	HT

Dimensions are in inches.tenths

Letter locations are panel edge to lower left corner

LETTER POSITIONS (X)

N	o	r	t	h		B	r	a	n	c	h											LENGTH	SERIES-SIZE
4.5	8	11.1	12.7	14.7	17.1	21.1	24.4	26.2	29.3	32.2	35.1											32.9	D 2000 4/3
C	h	i	c	a	g	o		R	i	v	e	r											D 2000 4/3
3.5	7	10.1	11.4	14.1	17	20	22.5	26.5	29.8	30.9	34.1	37										35	

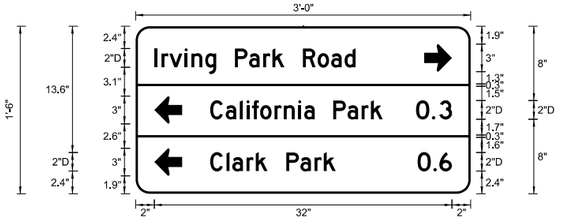

SIGN NUMBER	WAYFINDING–SB
WIDTH x HGHT.	3'-0" x 1'-6"
BORDER WIDTH	0.25"
CORNER RADIUS	1.5"
MOUNTING	Ground
BACKGROUND	TYPE: Reflective
	COLOR: Green
LEGEND/BORDER	TYPE: Reflective
	COLOR: White/White

SYMBOL	ROT	X	Y	WID	HT
AR_Type D	270	31	13.1	3	3
AR_Type D	90	2	7.5	3	3
AR_Type D	90	2	1.9	3	3

Dimensions are in inches.tenths

Letter locations are panel edge to lower left corner

LETTER POSITIONS (X)

I	r	v	I	n	g		P	a	r	k		R	o	a	d							LENGTH	SERIES-SIZE
2	2.8	3.6	5.3	6	7.5	8.7	10.7	12.2	13.7	14.7	16	18	19.6	21	22.4							21.6	D 2000 21.5
C	a	I	i	f	o	r	n	i	a		P	a	r	k									D 2000
8	9.7	11.2	11.9	12.5	13.4	14.9	15.9	17.5	18.1	19.2	21.2	22.8	24.3	25.3								18.6	21.5
0	.	3																					D 2000
30.1	31.8	32.6																				3.9	2
C	I	a	r	k		P	a	r	k														D 2000
8	9.8	10.4	11.9	12.9	14.2	16.2	17.7	19.2	20.2													13.5	21.5
0	.	6																					D 2000
30.3	32	32.6																				3.7	2

SIGN NUMBER	WAYFINDING–NB
WIDTH x HGHT.	2'-6" x 1'-0"
BORDER WIDTH	0.25"
CORNER RADIUS	1"
MOUNTING	Ground
BACKGROUND	TYPE: Reflective
	COLOR: Green
LEGEND/BORDER	TYPE: Reflective
	COLOR: White/White

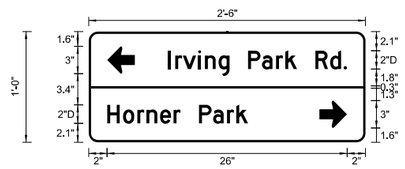

SYMBOL	ROT	X	Y	WID	HT
AR_Type D	90	2	7.4	3	3
AR_Type D	270	25	1.6	3	3

Dimensions are in inches.tenths

Letter locations are panel edge to lower left corner

LETTER POSITIONS (X)

I	r	v	i	n	g		P	a	r	k		R	d	.								LENGTH	SERIES-SIZE
8.6	9.4	10.2	11.9	12.6	14.1	15.3	17.3	18.8	20.3	21.3	22.6	24.6	26.2	27.7								19.4	D 2000 21.5
H	o	r	n	e	r		P	a	r	k													D 2000
2	3.7	5.3	6.3	7.7	9.2	10	12	13.5	15	16												15.3	21.5

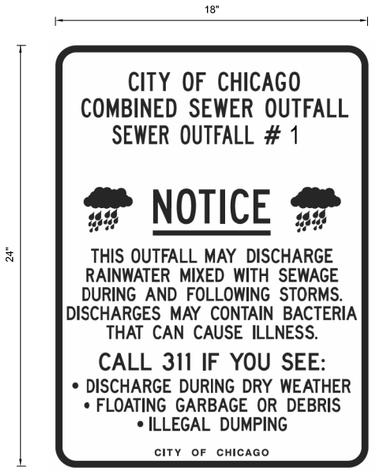

SIGN NUMBER: CSO–1

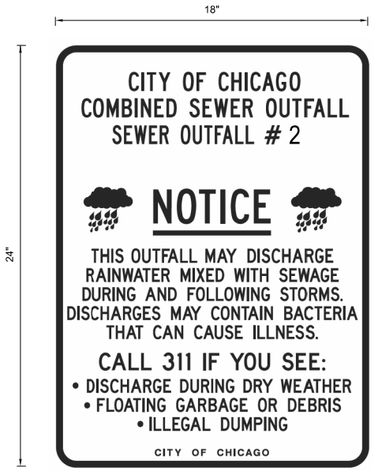

SIGN NUMBER: CSO–2

...\Cadd Sheets\E5038-sht-pmk3.dgn
11/29/2017 1:37:24 PM

DESIGN: BJD				
DRAWN: BJD				
CHECKED: SA				
APPROVED:				
DATE: 11/29/2017				
SCALE: NTS				
FILE:	NO.	BY	DATE	DESCRIPTION
	REVISIONS			

KEY PLAN:

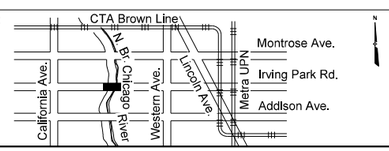

CDOT
CHICAGO DEPARTMENT OF TRANSPORTATION

EJM ENGINEERING, INC.
411 South Wells Street Suite 1000
Chicago, Illinois 60607

W. IRVING PARK ROAD AT NORTH BRANCH CHICAGO RIVER

SIGN DETAILS

PROJECT NO. E-5-038

DRAWING NO. PMK–3

CONTRACT NO. XXXXX

TOTAL SHEETS	SHEET NO.
184	34

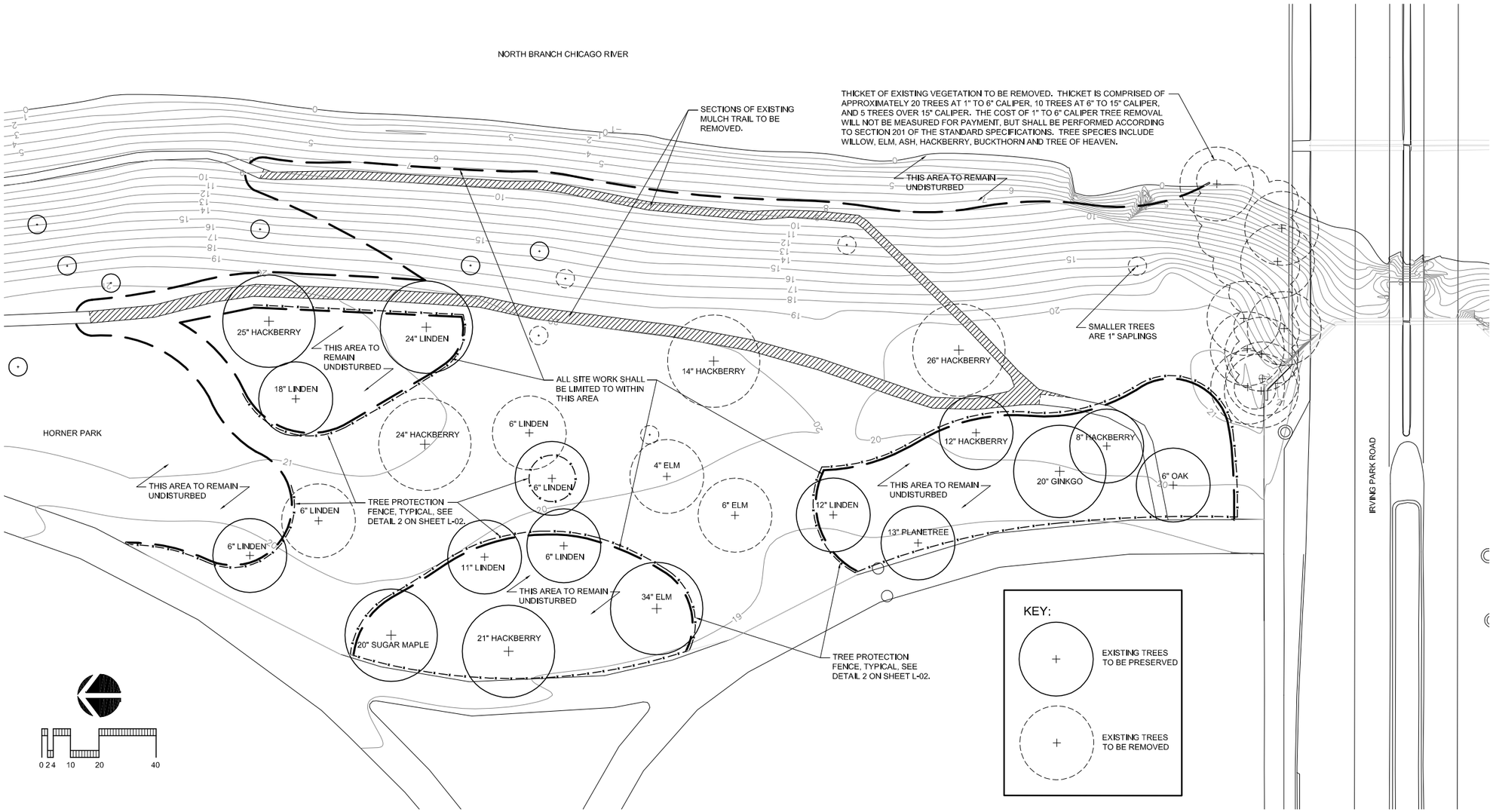

1 TREE PRESERVATION PLAN - NORTH SECTION
1" = 20'-0"

$FILE$

$TIME$

$DATE$

DESIGN: BF				
DRAWN: BF				
CHECKED: BF				
APPROVED:				
DATE: 10-09-17				
SCALE: 1" = 20'				
FILE:	NO.	BY	DATE	DESCRIPTION
	REVISIONS			

KEY PLAN:

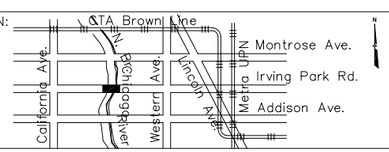

CDOT
CHICAGO DEPARTMENT OF TRANSPORTATION

DANIEL WEINBACH & PARTNERS, LTD.
Landscape Architects
53 W. Jackson Blvd, #250, Chicago, IL 60604

OUC NUMBER 2014-63418

W. IRVING PARK RD AT NORTH BRANCH CHICAGO RIVER

TREE PRESERVATION PLAN NORTH SECTION

PROJECT NO. E-5-038

DRAWING NO. L-01

CONTRACT NO. XXXXX

TOTAL SHEETS	SHEET NO.
184	35

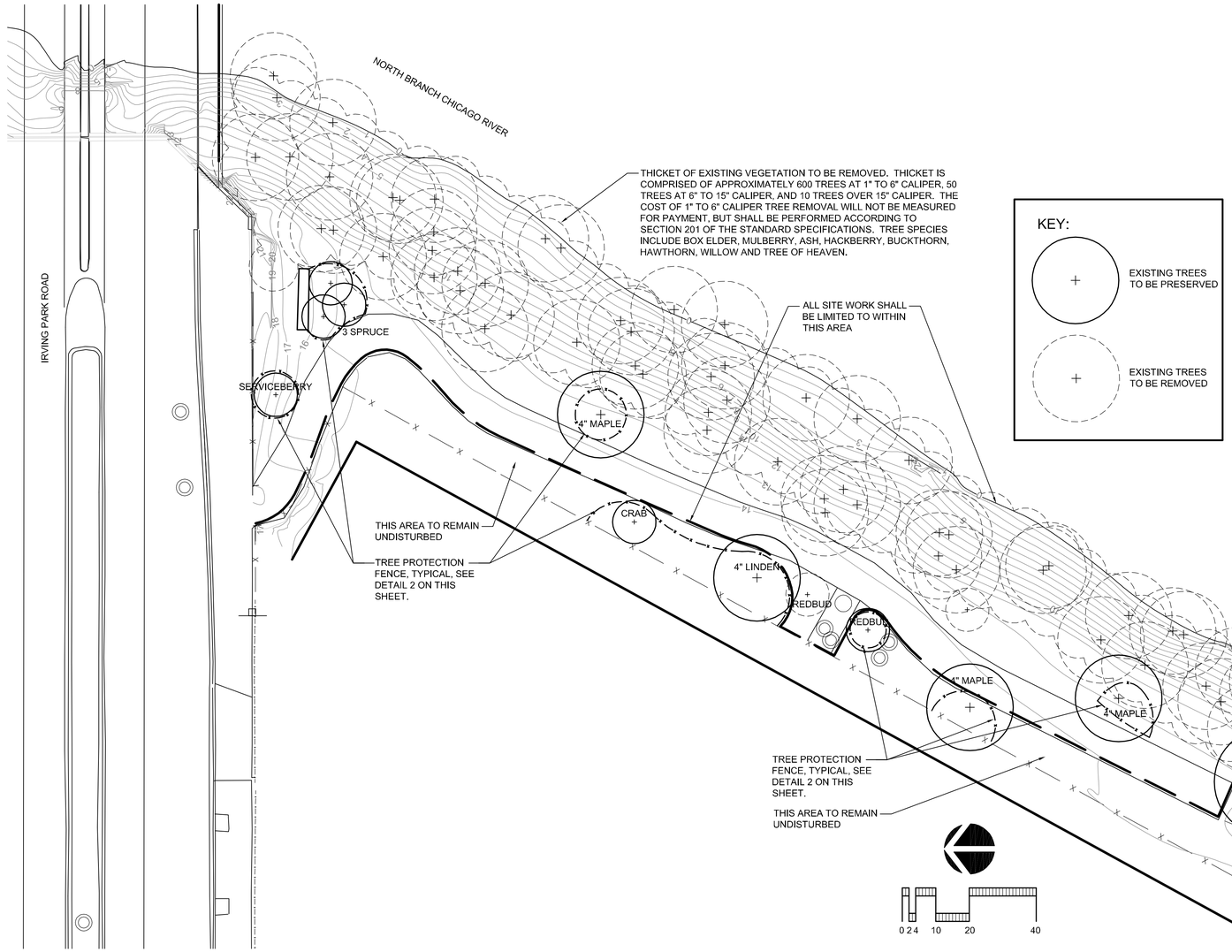

1 TREE PRESERVATION PLAN - SOUTH SECTION
1" = 20'-0"

FENCING SHALL BE INSTALLED IN LOCATIONS SHOWN ON THE TREE PRESERVATION PLAN. POSTS SHALL BE PLACED 4' ON CENTER. AFTER INSTALLING ALL POSTS, TIGHTLY WRAP THE FABRIC ACROSS THE POSTS TO PREVENT SAGGING. THE FABRIC SHALL BE ATTACHED OUTSIDE THE POSTS, AWAY FROM THE TREE. SAFETY FENCE FABRIC SHALL BE ORANGE CONTRACTOR'S GRADE SMOOTH TOP DIAMOND PLASTIC FENCE. POSTS SHALL BE 6' LONG HEAVY DUTY GALVANIZED STEEL T-POSTS, SET TO A DEPTH OF 2' BELOW GRADE. POST SHALL NOT BE DRIVEN INTO TREE ROOTS OR UTILITY LINES. LOCKING TIES SHALL BE 8" PLASTIC LOCKING ZIP TIES, 4 PER POST. FOR TREES WITHIN THE PROPERTY LINE, BARK MULCH SHALL BE PLACED WITHIN THE TREE PROTECTION FENCE AT A UNIFORM DEPTH OF 3". FOR PARKWAY TREES THE EXISTING LAWN IS TO REMAIN. ANY ALTERATIONS TO THE FENCING LAYOUT MUST BE APPROVED BY THE ENGINEER.

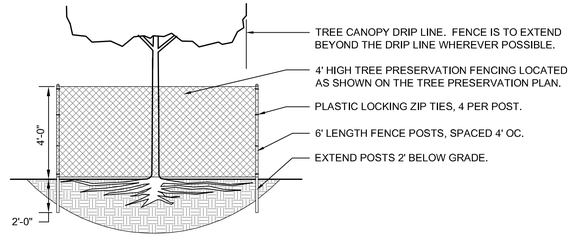

2 TREE PROTECTION FENCING
NOT TO SCALE

TREE PROTECTION NOTES

1. ALL EXISTING TREE LOCATIONS AND SIZES ARE TO BE VERIFIED IN THE FIELD BY THE CONTRACTOR. THE CONTRACTOR SHALL NOTIFY THE ENGINEER OF ANY DISCREPANCIES BETWEEN THE DRAWINGS AND ACTUAL FIELD CONDITIONS, PRIOR TO THE START OF CONSTRUCTION.
2. ALL TREES TO REMAIN AS NOTED ON THE DRAWINGS ARE TO BE ENCLOSED WITH A TREE PROTECTION FENCE, PRIOR TO THE START OF CONSTRUCTION. SEE TREE PROTECTION FENCING DETAIL. FENCE INSTALLATION TO BE APPROVED BY ENGINEER, PRIOR TO CONSTRUCTION. SEE BILL OF MATERIAL ON SHEET L-06.
3. NO MATERIALS OR VEHICLES SHALL BE STORED, DRIVEN OR PARKED WITHIN TREE PROTECTION FENCING.
4. ALL GRADING, CONSTRUCTION EQUIPMENT AND MATERIALS SHALL BE FORBIDDEN FROM ENCROACHING WITHIN THE TREE PROTECTION FENCING.
5. CRUSHED LIMESTONE OR ANY MATERIALS THAT MAY BE DETRIMENTAL TO TREES SHALL NOT BE DUMPED WITHIN THE TREE PROTECTION FENCING NOR SHALL THEY BE LOCATED AT ANY HIGHER ELEVATION WHERE DRAINAGE TOWARD THE TREE(S) COULD CONCEIVABLY AFFECT THE HEALTH OF THE TREE(S).
6. IF IT IS THE CONTRACTOR'S OPINION THAT ANY OF THE TREES TO BE PRESERVED WILL BE NEGATIVELY AFFECTED DURING THE CONSTRUCTION PROCESS, THE ENGINEER SHALL BE NOTIFIED IMMEDIATELY.
7. THE CONTRACTOR IS TO MAINTAIN THE PROTECTION FENCING THROUGHOUT THE ENTIRE CONSTRUCTION PROCESS UNTIL NEW LANDSCAPING BEGINS AND THE ENGINEER APPROVES REMOVAL OF THE FENCING.
8. ANY PRESERVED TREE THAT IS DAMAGED DURING CONSTRUCTION, SHALL BE REPLACED BY THE CONTRACTOR AT THEIR EXPENSE, WITH A TREE OF EQUAL SIZE. FOR TREES DAMAGED OVER 8" CALIPER, THE CONTRACTOR SHALL REPLACE IT WITH MULTIPLE TREES TOTALING THE CALIPER INCHES OF THE DAMAGED TREE.
9. PRUNING OF SOME EXISTING TREES MAY BE REQUIRED FOR INSTALLATION OF FENCING, GRADING, AND OTHER CONSTRUCTION ACTIVITIES. SUCH PRUNING SHALL BE DIRECTED BY THE COMMISSIONER, AND SHALL BE CONSIDERED INCIDENTAL TO THE TREE PROTECTION.

$FILE$

$TIME$

DESIGN: BF				
DRAWN: BF				
CHECKED: BF				
APPROVED:				
DATE: 10-09-17				
SCALE: 1" = 20'				
FILE:	NO.	BY	DATE	DESCRIPTION
	REVISIONS			

$DATE$

KEY PLAN:

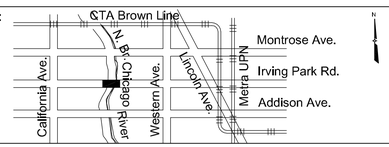

CDOT
CHICAGO DEPARTMENT OF TRANSPORTATION

DANIEL WEINBACH & PARTNERS, LTD.
Landscape Architects
53 W. Jackson Blvd, #250, Chicago, IL 60604

OUC NUMBER 2014-63418

W. IRVING PARK RD AT NORTH BRANCH CHICAGO RIVER

TREE PRESERVATION PLAN SOUTH SECTION

PROJECT NO. E-5-038

DRAWING NO. L-02

CONTRACT NO. XXXXX

TOTAL SHEETS	SHEET NO.
184	36

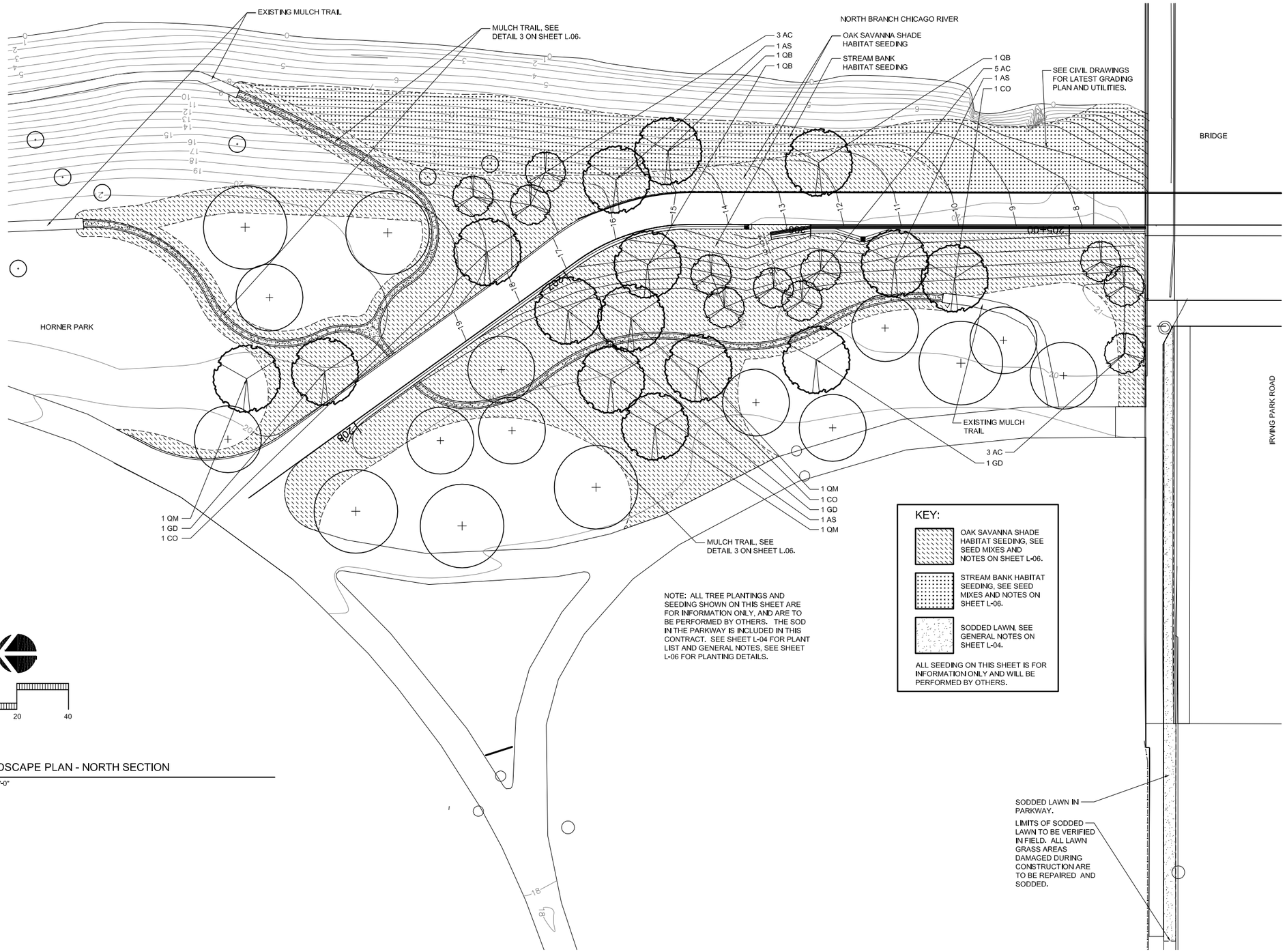

1 LANDSCAPE PLAN - NORTH SECTION
1" = 20'-0"

$FILE$

$TIME$

DESIGN: BF				
DRAWN: BF				
CHECKED: BF				
APPROVED:				
DATE: 10-09-17				
SCALE: 1" = 20'				
FILE:	NO.	BY	DATE	DESCRIPTION
	REVISIONS			

$DATE$

KEY PLAN:

CDOT
CHICAGO DEPARTMENT OF TRANSPORTATION

DANIEL WEINBACH & PARTNERS, LTD.
Landscape Architects
53 W. Jackson Blvd, #250, Chicago, IL 60604

OUC NUMBER 2014-63418

W. IRVING PARK RD AT NORTH BRANCH CHICAGO RIVER

LANDSCAPE PLAN NORTH SECTION

PROJECT NO. E-5-038

DRAWING NO. L-03

CONTRACT NO. XXXXX

TOTAL SHEETS	SHEET NO.
184	37

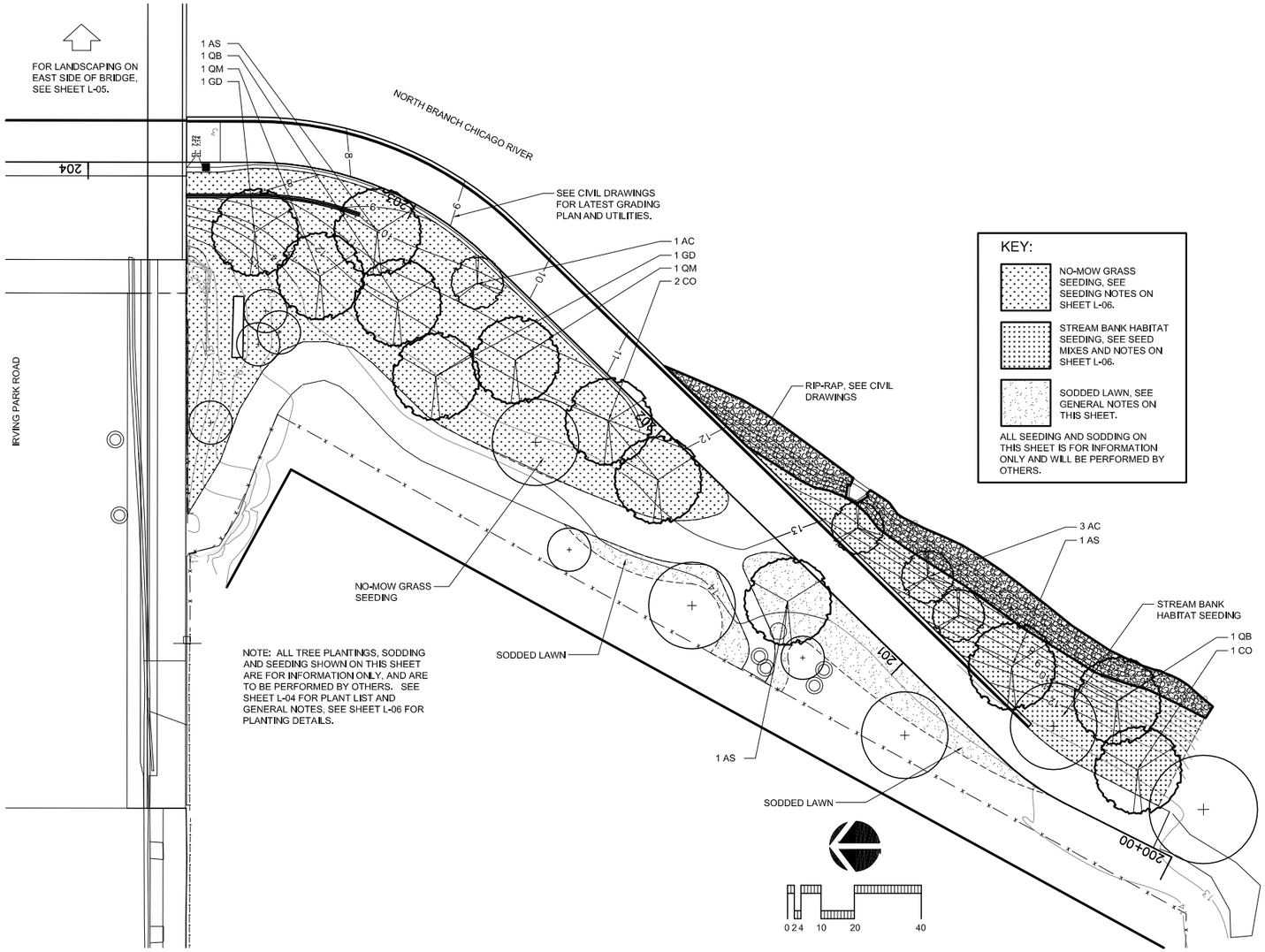

1 LANDSCAPE PLAN - SOUTH SECTION
1" = 20'-0"

PLANT LIST FOR SHEETS L-03 AND L-04.

TREES IN THIS PLANT LIST ARE FOR INFORMATION ONLY, AND WILL BE PERFORMED BY OTHERS.

CODE	BOTANICAL NAME	COMMON NAME	SIZE	QUANTITY	ADDITIONAL NOTES
	DECIDUOUS TREES				
AC	AMELANCHIER CANADENSIS	SHADBLOW SERVICEBERRY	6' HT x 5' W	15	MULTI-STEM
AS	ACER SACCHARUM	SUGAR MAPLE	2.5" CALIPER	6	BRANCHED UP 6'
CO	CELTIS OCCIDENTALIS	COMMON HACKBERRY	2.5" CALIPER	6	BRANCHED UP 6'
GD	GYMNOCLADUS DIOICUS	KENTUCKY COFFEETREE	2.5" CALIPER	5	BRANCHED UP 6'
QB	QUERCUS BICOLOR	SWAMP WHITE OAK	2.5" CALIPER	5	BRANCHED UP 6'
QM	QUERCUS MACROCARPA	BUR OAK	2.5" CALIPER	5	BRANCHED UP 6'

GENERAL NOTES

1. ALL DIMENSIONS ARE TO BE VERIFIED IN THE FIELD BY THE CONTRACTOR. NOTIFY THE COMMISSIONER OF ANY DISCREPANCIES PRIOR TO STARTING WORK.
2. ALL OVERHEAD AND UNDERGROUND UTILITIES ARE TO BE LOCATED PRIOR TO DIGGING OR EXCAVATION. IF UTILITIES OR OTHER OBSTRUCTIONS ARE DISCOVERED TO CONFLICT WITH GRADING, NOTIFY THE COMMISSIONER SO THAT ADJUSTMENTS MAY BE MADE PRIOR TO PROCEEDING.
3. CONTRACTOR SHALL TAKE ALL PRECAUTIONS TO PROTECT EXISTING PLANTS, LAWN AREA, FENCES, SITE FEATURES AND PAVING TO REMAIN. ANY DAMAGE TO THESE EXISTING AREAS OR FEATURES SHALL BE REPLACED BY THE CONTRACTOR AT THEIR EXPENSE. DAMAGED LAWN AREAS SHALL BE TILLED, RE-GRADED, TOPSOIL ADDED AS NEEDED AND BE RESTORED WITH SOD. REPLACED FEATURES, PLANTS AND SOD SHALL BE WARRANTED BY THE CONTRACTOR FOR A PERIOD OF ONE YEAR AT AT THEIR EXPENSE.
4. PROVIDE POSITIVE DRAINAGE AT ALL TIMES. DO NOT OBSTRUCT THE NATURAL OR ENGINEERED DRAINAGE FLOW PATTERN. NOTIFY THE COMMISSIONER OF ANY DRAINAGE CONCERNS.
5. EXISTING TOPSOIL FROM ON SITE THAT HAS BEEN STOCKPILED WILL BE USED, AS DETAILED IN THE DETAILED SPECIFICATIONS.
6. ALL TREES ARE TO HAVE FRESHLY DUG, BALLED AND BURLAPPED ROOT BALLS WITH SIZES THAT MEET THE STANDARDS OF THE AMERICAN NURSERYMEN'S ASSOCIATION.
7. ALL TREES FOR IRVING PARK ROAD SHALL BE INSPECTED BY CDOT, AT THE NURSERY, PRIOR TO DIGGING. TREES THAT ARE ACCEPTABLE WILL BE SEALED. ALL SEALS APPLIED BY CDOT MUST REMAIN ON THE TREES AND ARE NOT TO BE REMOVED BY THE CONTRACTOR. ALL TREES MUST HAVE SEALS IN PLACE AT TIME OF ACCEPTANCE OR WILL BE AUTOMATICALLY REJECTED. HEELED-IN TREES WILL NOT BE ACCEPTED WITHOUT PRIOR APPROVAL FROM THE COMMISSIONER.
8. PLANT MATERIAL SHALL ONLY BE INSTALLED WITHIN THE FOLLOWING DATES:
   DECIDUOUS PLANTS: APR 15 THROUGH NOV 15
9. TEST TREE PITS AND PLANT BEDS FOR ADEQUATE DRAINAGE. FILL PLANT PIT WITH 12" OF WATER. IF WATER LEVEL DOES NOT DROP A MINIMUM OF ONE INCH PER HOUR, NOTIFY THE COMMISSIONER OF DRAINAGE ISSUES.
10. COORDINATE WITH CHICAGO PARK DISTRICT'S REPRESENTATIVE TO ALLOW FOR COMPLETION OF THE LANDSCAPE WORK WITHIN THE CHICAGO PARK DISTRICT AREAS, IMMEDIATELY AFTER FINAL GRADING.
11. EROSION CONTROL MEASURES MUST BE PERFORMED AS DETAILED IN THE DETAILED SPECIFICATIONS AND SPECIAL PROVISIONS.

$FILE$

$TIME$

DESIGN: BF				
DRAWN: BF				
CHECKED: BF				
APPROVED:				
DATE: 10-09-17				
SCALE: 1" = 20'				
FILE:	NO.	BY	DATE	DESCRIPTION
	REVISIONS			

$DATE$

KEY PLAN:

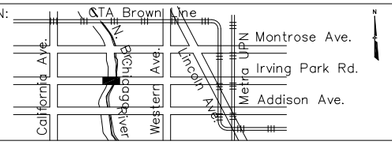

CDOT
CHICAGO DEPARTMENT OF TRANSPORTATION

DANIEL WEINBACH & PARTNERS, LTD.
Landscape Architects
53 W. Jackson Blvd, #250, Chicago, IL 60604

OUC NUMBER 2014-63418

W. IRVING PARK RD AT NORTH BRANCH CHICAGO RIVER

LANDSCAPE PLAN SOUTH SECTION

PROJECT NO. E-5-038

DRAWING NO. L-04

CONTRACT NO. XXXXX

TOTAL SHEETS	SHEET NO.
184	38

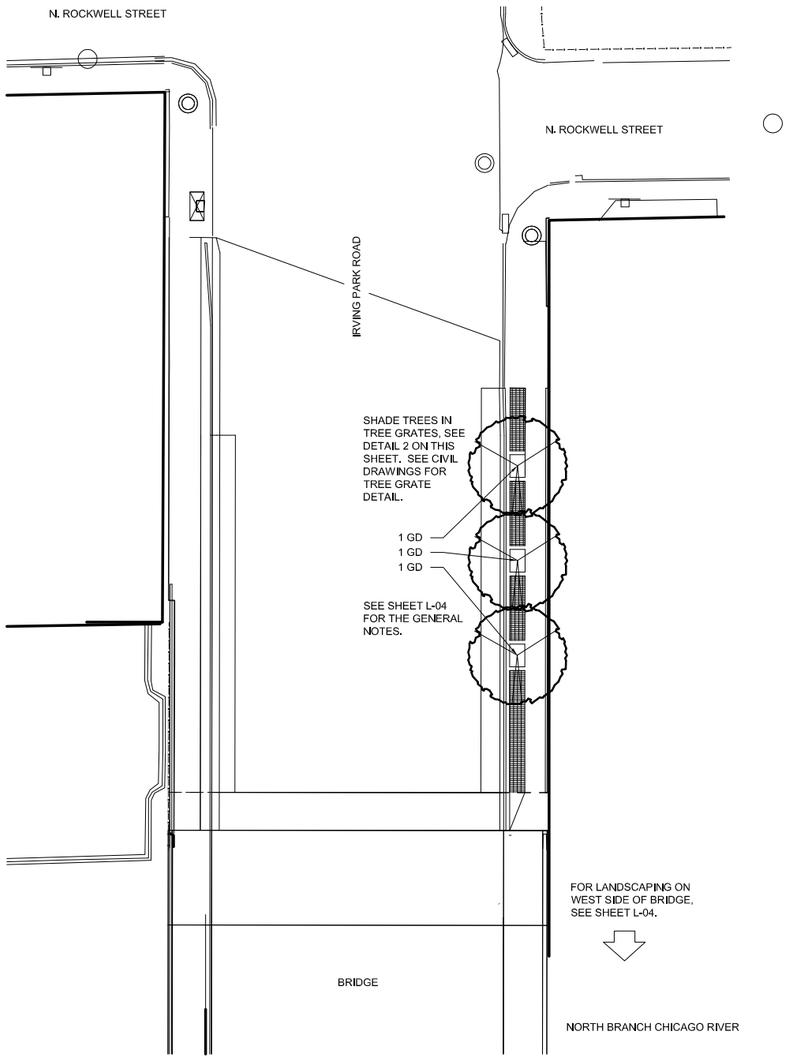

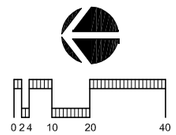

1 LANDSCAPE PLAN - IRVING PARK ROAD
1" = 20'-0"

PLANT LIST FOR SHEET L-05

TREES IN THIS PLANT LIST ARE INCLUDED IN THE CONTRACT.

CODE	BOTANICAL NAME	COMMON NAME	SIZE	QUANTITY	ADDITIONAL NOTES
	DECIDUOUS TREES				
GD	GYMNOCLADUS DIOICUS	KENTUCKY COFFEETREE	2.5" CALIPER	3	BRANCHED UP 6'

LOCATE ALL UNDERGROUND UTILITIES PRIOR TO DIGGING. TREE PIT WIDTH TO BE EXTENDED 12" AROUND THE ENTIRE ROOT BALL AS SHOWN IN THE DETAIL BELOW. TEST TREE PIT FOR DRAINAGE PRIOR TO INSTALLING TREE. PRUNE OFF ALL DEAD, BROKEN OR SCARRED BRANCHES, AND SHAPE PRUNE AS DIRECTED BY THE COMMISSIONER. REMOVE APPROXIMATELY 5% -10% OF THE OVERALL BRANCHING. LOCATE ROOT FLARE IN ROOT BALL AND SET TREE HEIGHT SO THAT ROOT FLARE IS FLUSH WITH THE PLANTING MIX. WATER IN THE PLANTING MIX THOROUGHLY, WHILE KEEPING THE TREE PLUMB. STRAIGHTEN TREE IF SETTLING OR LEANING OCCURS. CONTRACTOR TO REMOVE ALL TWINE, ROPE, BASKET WIRE AND BURLAP FROM THE TOP HALF OF THE ROOT BALL.

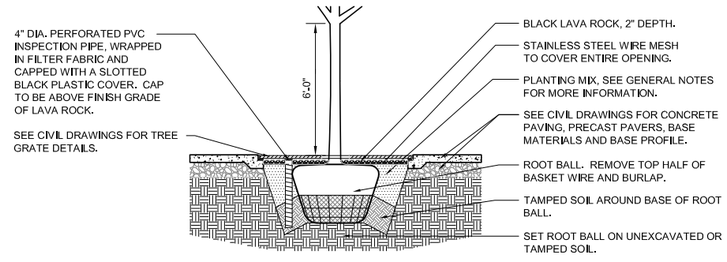

2 DECIDUOUS TREE IN TREE GRATE PLANTING DETAIL
NOT TO SCALE

$FILE$

$TIME$

$DATE$

DESIGN: BF				
DRAWN: BF				
CHECKED: BF				
APPROVED:				
DATE: 10-09-17				
SCALE: 1" = 20'				
FILE:	NO.	BY	DATE	DESCRIPTION
	REVISIONS			

KEY PLAN:

CDOT
CHICAGO DEPARTMENT OF TRANSPORTATION

DANIEL WEINBACH & PARTNERS, LTD.
Landscape Architects
53 W. Jackson Blvd, #250, Chicago, IL 60604

OUC NUMBER 2014-63418

W. IRVING PARK RD AT NORTH BRANCH CHICAGO RIVER

LANDSCAPE PLAN IRVING PARK ROAD

PROJECT NO. E-5-038

DRAWING NO. L-05

CONTRACT NO. XXXXX

TOTAL SHEETS	SHEET NO.
184	39

LOCATE ALL UNDERGROUND UTILITIES PRIOR TO DIGGING. TREE PIT WIDTH TO BE THREE TIMES THE WIDTH OF THE ROOT BALL. TEST TREE PIT FOR DRAINAGE PRIOR TO INSTALLING TREE. PRUNE OFF ALL DEAD, BROKEN OR SCARRED BRANCHES, AND SHAPE PRUNE AS DIRECTED BY THE ENGINEER. LOCATE ROOT FLARE IN ROOT BALL AND SET TREE HEIGHT SO THAT ROOT FLARE IS FLUSH WITH FINISH GRADE. REMOVE ALL BASKET WIRE, TWINE AND BURLAP FROM THE TOP HALF OF THE ROOT BALL. WATER IN THE PLANTING MIX THOROUGHLY, WHILE KEEPING THE TREE PLUMB. STRAIGHTEN TREE IF SETTLING OCCURS. THIS DETAIL PERTAINS TO TREE PLANTINGS ON PARK DISTRICT PROPERTY, TO BE PERFORMED BY OTHERS.

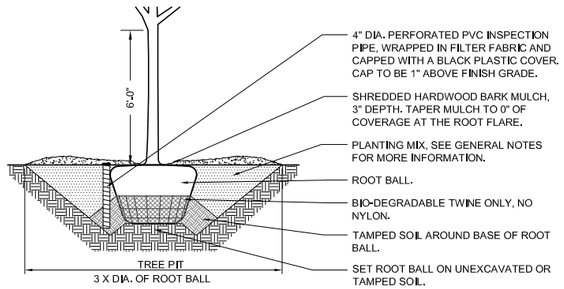

1 DECIDUOUS TREE PLANTING DETAIL
NOT TO SCALE

LOCATE ALL UNDERGROUND UTILITIES PRIOR TO EXCAVATING FOR MULCH TRAIL. FINISH GRADE OF MULCH TO BE ONE INCH BELOW THE TOP OF TIMBERS. MULCH TO BE SHREDDED HARDWOOD BARK MULCH, DOUBLE GROUND. MULCH IS TO BE FREE OF WOOD CHIPS, TWIGS, LEAVES, DIRT AND OTHER DEBRIS. LUMBER, PALLETS OR OTHER FORMS OF WOOD ARE NOT ACCEPTABLE. MULCH SHALL NOT BE COLOR PROCESSED.

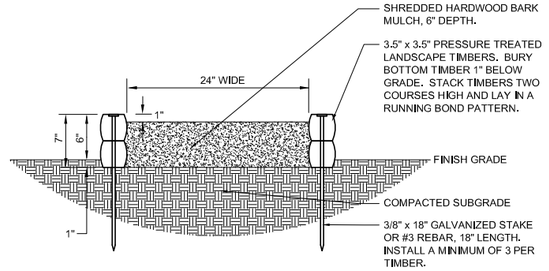

2 MULCH TRAIL
NOT TO SCALE

BILL OF MATERIAL

ITEM	UNIT	QUANTITY
Tree Protection Fence	Lin Ft	1,300
Tree - Gymnocladus dioicus, 2.5" cal.	Each	3
Path Removal	Sq Ft	2,250
Mulch Trail	Lin Ft	510

$FILE$
$TIME$
$DATE$

DESIGN: BF				
DRAWN: BF				
CHECKED: BF				
APPROVED:				
DATE: 10-09-17				
SCALE: NONE				
FILE:	NO.	BY	DATE	DESCRIPTION
	REVISIONS			

KEY PLAN:

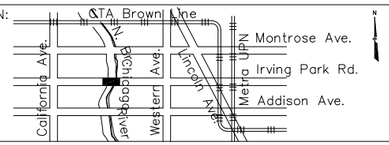

CDOT
CHICAGO DEPARTMENT OF TRANSPORTATION

DANIEL WEINBACH & PARTNERS, LTD.
Landscape Architects
53 W. Jackson Blvd, #250, Chicago, IL 60604

OUC NUMBER 2014-63418

W. IRVING PARK RD AT NORTH BRANCH CHICAGO RIVER

LANDSCAPE DETAILS

PROJECT NO. E-5-038

DRAWING NO. L-06

CONTRACT NO. XXXXX

TOTAL SHEETS	SHEET NO.
184	40

GENERAL NOTES

1. THE CONTRACTOR AND ENGINEER MUST INSPECT DISTURBED AREAS, OUTSIDE STORAGE AREAS, AND EROSION AND SEDIMENT CONTROL MEASURES AT LEAST ONCE EVERY 7 DAYS AND WITHIN 24 HOURS OF A RAINFALL OF 0.5 INCHES OR MORE OR EQUIVALENT SNOWFALL.

2. EROSION AND SEDIMENT CONTROL SHALL BE PERFORMED ACCORDING TO ILLINOIS URBAN MANUAL, ILLINOIS AND AS SHOWN ON PLANS.

3. CONTRACTOR SHALL PROVIDE CONSTRUCTION ENTRANCES AS DIRECTED BY THE ENGINEER. CONTRACTOR SHALL COORDINATE WITH ENGINEER FOR THE REQUIREMENTS AND LOCATIONS OF ALL CONSTRUCTION ENTRANCES. A NOMINAL QUANTITY HAS BEEN PROVIDED.

4. GRAVELED ROADS, ACCESS DRIVES, PARKING AREAS OF SUFFICIENT WIDTH AND LENGTH, AND VEHICLE WASH DOWN OR UNDER CARRIAGE WASH OFF FACILITIES IF NECESSARY, SHALL BE PROVIDED TO PREVENT THE DEPOSIT OF SOIL FROM BEING TRACKED ONTO PUBLIC OR PRIVATE ROADWAYS. ANY SOIL REACHING A PUBLIC OR PRIVATE ROADWAY SHALL BE REMOVED BEFORE THE END OF EACH WORKDAY.

5. SHOULD IT BE NECESSARY TO REMOVE ANY EROSION CONTROL DEVICES FOR CONSTRUCTION REASONS, THE CONTRACTOR SHALL FIRST OBTAIN PERMISSION AND SHALL REPAIR OR REPLACE THE REMOVED DEVICES THE SAME DAY. THE COST OF REMOVING AND REPLACING THE DEVICE SHALL BE INCIDENTAL TO THE CONTRACT.

6. PERMANENT VEGETATIVE PLANTS SHALL BE USED ON ALL DISTURBED AREAS WHENEVER POSSIBLE WITHIN THE SAME DAY. WHEN PERMANENT LANDSCAPING IS NOT POSSIBLE TO BE PLACED WITHIN THE SAME DAY, TEMPORARY EROSION CONTROL SEEDING (ITEM 28000250) WILL BE USED WITH TEMPORARY EROSION CONTROL BLANKET (ITEM 28001100) TO STABILIZE DISTURBED AREAS BY THE END OF THE WORK DAY.

7. ALL TEMPORARY STOCKPILES SHALL HAVE TEMPORARY EROSION CONTROL SEEDING, TEMPORARY EROSION CONTROL BLANKET, AND SILT FENCE AT THE PERIMETER OF THE STOCKPILE. STOCKPILES SHALL BE LOCATED AS SHOWN ON PLANS OR AS DIRECTED BY ENGINEER.

8. CONTRACTOR SHALL SUBMIT A DETAILED DUST CONTROL PLAN IN ACCORDANCE WITH ILLINOIS URBAN MANUAL.

9. NO WORK SHALL BE PERFORMED IN FLOWING WATER. WORK IN THE WATERWAY SHOULD BE TIMED TO TAKE PLACE DURING LOW OR NO-FLOW CONDITIONS. LOW FLOW CONDITIONS ARE AT OR BELOW THE NORMAL WATER ELEVATION. WORK IN OR NEAR THE CRITICAL AREAS SHOULD BE ISOLATED FROM CONCENTRATED FLOWS OR STREAM FLOW. ONCE WORK IN THIS AREA BEGINS, PRIORITY SHALL BE GIVEN TO THE COMPLETION OF THE WORK AND FINAL STABILIZATION OF ALL DISTURBED AREAS. SEE ADDITIONAL IN-STREAM OR STREAMSIDE NOTES ON THIS SHEET.

10 CONTRACTOR SHALL NOT ENTER ANY WETLAND AND WATERS OF THE UNITED STATES (WOUS) AREAS EXCEPT THOSE AREAS IDENTIFIED IN THE CONTRACT PLANS. WHERE WORK IS IDENTIFIED WITHIN THESE AREAS, ALL MATERIALS AND EQUIPMENT SHALL NOT ENTER THE CONSTRUCTION AREA UNTIL IT IS ISOLATED AND DEWATERED. ALL MATERIALS AND EQUIPMENT SHALL BE MOVED OUTSIDE THE WETLAND AN WATERS OF THE UNITED STATES BOUNDARIES IMMEDIATELY FOLLOWING COMPLETION OF THE CONSTRUCTION ACTIVITY.

11. DURING DEWATERING OF THE COFFERED WORK AREA, ALL SEDIMENT-LADEN WATER MUST BE FILTERED TO REMOVE SEDIMENT.

12. ADDITIONAL QUANTITIES HAVE BEEN PROVIDED FOR USE AS DIRECTED BY THE ENGINEER WHEN TEMPORARY SEEDING AND TEMPORARY BLANKET ARE FOUND TO BE INADEQUATE FOR SEDIMENT CONTROL.

TEMPORARY EROSION CONTROL SEQUENCE OF CONSTRUCTION

IMMEDIATELY UPON COMPLETION OF CLEARING OR GRADING OR WITHIN 14 DAYS OF LAST DISTURBANCE, THE FOLLOWING MEASURES SHALL BE ENFORCED:

1. PROVIDE TEMPORARY STABILIZATION WITH STRAW MULCH OVER DISTURBED AREAS WHERE NO FURTHER WORK IS TO OCCUR FOR 14 DAYS OR LONGER THAT CANNOT BE STABILIZED WITH PERMANENT VEGETATIVE MEASURES. THESE AREAS SHALL BE TREATED WITH PERMANENT VEGETATIVE COVER AS SOON AS POSSIBLE.

2. PROVIDE PERMANENT SEEDING AND VEGETATION, AS SHOWN ON THE LANDSCAPE AND FENCING PLANS BEFORE REMOVAL OF THE TEMPORARY EROSION CONTROL MEASURES.

THE FOLLOWING MEASURES SHALL BE PROVIDED DURING THE CONTRACT ON AN AS NEEDED BASIS:

1. DUST SUPPRESSION AGENTS SHALL BE APPLIED TO CONTROL THE DUST RESULTING FROM CONSTRUCTION OPERATIONS.

2. STREET CLEANING AND SWEEPING SHALL BE PERFORMED ON EACH WORKDAY, AS REQUIRED AND DIRECTED AND APPROVED BY THE ENGINEER. COST FOR THIS WORK WILL BE INCIDENTAL TO TRAFFIC CONTROL AND PROTECTION, (SPECIAL).

INSPECTION AND MAINTENANCE

1. SILT FENCE RECTANGULAR - BUILT UP SEDIMENT SHALL BE REMOVED FROM FENCES WHEN IT HAS REACHED ONE HALF THE HEIGHT OF THE FENCE. FENCES WILL BE INSPECTED FOR DEPTH OF SEDIMENT AND TEARS, TO SEE IF THE FABRIC IS SECURELY ATTACHED TO THE FENCE POSTS, AND TO SEE THAT THE FENCE POSTS ARE FIRMLY IN THE GROUND. REPAIR FENCES AND POSTS AS NECESSARY.

2. DITCH CHECKS - INSPECT DITCH IF FLOW IS BEING IMPEDED BY SEDIMENT AND INSPECT FOR EVIDENCE OF WASH OUT. BUILT UP SEDIMENT SHALL BE REMOVED WHEN IT HAS REACHED ONE HALF THE HEIGHT OF THE DAM OR DITCH CHECK. INSPECT FOR DEPTH OF SEDIMENT AND TO SEE IF THE DEVICE IS EMBEDDED INTO THE GROUND AND IF STAKES ARE FIRMLY INTO THE GROUND.

3. STONE OUTLET STRUCTURE SEDIMENT TRAP - INSPECT FOR DEPTH OF SEDIMENT. SEDIMENT SHALL BE CLEANED OUT WHEN STRUCTURE IS 50% FULL AND ALSO AT THE END OF THE PROJECT. INSPECT RIP RAP FOR EVIDENCE OF WASHOUT. REPLACE OR ADD RIP RAP IF NECESSARY.

4. LOCATIONS WHERE VEHICLES ENTER AND EXIT THE SITE - INSPECT FOR EVIDENCE OF OFF SITE SEDIMENT TRACKING. REMOVE SEDIMENT AS NECESSARY.

5. STABILIZED CONSTRUCTION ENTRANCES - INSPECT ENTRANCES TO SEE IF SEDIMENT IS TRACKED ONTO ROAD. REPLACE OR ADD STONE AS NECESSARY. CULVERTS AT STABILIZED CONSTRUCTION ENTRANCES SHALL BE MONITORED AND CLEANED AS NECESSARY TO MAINTAIN DRAINAGE PATTERNS.

6. FILTER FABRIC INLET PROTECTION - INSPECT FABRIC FOR TEARS AND REMOVE SEDIMENT WHEN FILTER IS ONE HALF FULL.

7. TEMPORARY RIP RAP AND AGGREGATE BERM - INSPECT RIP RAP FOR WASH OUT. REPAIR OR ADD SPECIFIED GRADATION OF RIP RAP AS NECESSARY.

8. NEW CONTROL MEASURES NEEDED OR CONTROLS NEEDING MODIFICATION AS A RESULT OF INSPECTIONS SHALL BE IMPLEMENTED WITHIN 7 CALENDAR DAYS OF THE INSPECTION.

9. ALL CONTROL MEASURES SHALL BE MAINTAINED IN GOOD WORKING ORDER BY THE GENERAL CONTRACTOR OR SUBCONTRACTOR. IF A REPAIR IS NECESSARY, IT SHALL BE INITIATED WITHIN 24 HOURS OF THE INSPECTION REPORT.

WATERS OF THE U.S.

1. ALL WETLANDS, WATERS OF THE U.S. AND OPEN WATER DETENTION FACILITIES ARE SUBJECT TO THE REVIEW AND APPROVAL BY RESOURCE AND REGULATORY AGENCIES. THOSE AGENCIES INCLUDE, BUT ARE NOT LIMITED TO THE ARMY CORPS OF ENGINEERS, THE ENVIRONMENTAL PROTECTION AGENCY, THE ILLINOIS DEPARTMENT OF NATURAL RESOURCES AND NORTH COOK COUNTY SOIL AND WATER CONSERVATION DISTRICT.

IN-STREAM OR STREAMSIDE NOTES

WORK IN WATERWAY SHALL BE IN ACCORDANCE OF REQUIREMENTS FOR IN-STREAM CONSTRUCTION ACTIVITIES OF U.S. ARMY CORPS OF ENGINEERS - CHICAGO DISTRICT.

1. NO WORK IN FLOWING WATER

   NO EQUIPMENT SHALL ENTER FLOWING WATER. WORK IN AND NEAR THE ENVIRONMENTALLY SENSITIVE AREAS SHOULD BE ISOLATED FROM CONCENTRATED FLOWS OR STREAM FLOW. ONCE WORK IN THIS AREA BEGINS, PRIORITY SHALL BE GIVEN TO THE COMPLETION OF THE WORK AND FINAL STABILIZATION OF ALL DISTURBED AREAS.

2. ISOLATED WORK AREA

   ALL DISTURBED AREAS AND WORK AREAS MUST BE ISOLATED FROM RIVER FLOWS AT ALL TIMES. THE DIVERSION/ ISOLATION OF THE RIVER FLOWS MUST BE CONSTRUCTED FROM NON-ERODIBLE MATERIALS. THE METHOD OF DIVERSION/ ISOLATION SHALL BE ACCORDING TO PLAN AND APPROVED PRIOR TO THE COMMENCEMENT OF CONSTRUCTION.

3. WORK IN AREAS CONTAINING CONCENTRATED FLOW I.E. WATERWAYS

   PRIOR TO COMMENCEMENT OF ANY IN-STREAM WORK, THE CONTRACTOR SHALL SUBMIT CONSTRUCTION PLANS AND A DETAILED NARRATIVE TO THE ENGINEER THAT DISCLOSE THE CONTRACTOR'S PREFERRED METHOD OF COFFERDAM AND DEWATERING METHOD. IN-STREAM WORK MAY INCLUDE WETLANDS WITH STANDING WATER, AS NEED.

   AN IN-STREAM WORK PLAN WITH THE WATERS OF THE U.S. MUST BE SUBMITTED TO THE USACE PRIOR TO CONSTRUCTION.

   A PRE- ACTIVITY MEETING SHOULD OCCUR FOR ANY WORK IMPACTING A WATERWAY. THE MEETING WILL ADDRESS:

   A. A CONSTRUCTION SEQUENCE

   B. DURING WORK ON THE (BANKS) SWALE/RIVER/STREAM/WETLAND. WORK MUST BE TIMED TO TAKE PLACE DURING LOW OR NO-FLOW CONDITIONS.

   C. CONCENTRATED FLOW MUST BE ISOLATED FROM THE WORK AREA USING A NON-ERODIBLE COFFERDAM (STEEL SHEETS, AQUA BARRIERS, ETC.). EXACT MEANS AND METHODS SHOULD BE DISCUSSED DURING A SCHEDULED PRE- ACTIVITY MEETING.

   D. IF BYPASS IS NECESSARY, THE INLET OF THE HOSE SHALL BE PLACED IN A SUMP PIT AND THE OUTLET PLACED ON A NON-ERODIBLE, ENERGY DISSIPATING SURFACE PRIOR TO REJOINING THE STREAM FLOW OR WETLAND.

   E. DURING DEWATERING OF THE COFFERED WORK AREA, ALL SEDIMENT-LADEN WATER MUST BE FILTERED TO REMOVE SEDIMENT. POSSIBLE OPTIONS FOR SEDIMENT REMOVAL INCLUDE BAFFLE SYSTEMS, ANIONIC POLYMERS SYSTEMS, DEWATERING BAGS, OR OTHER APPROPRIATE METHODS. A STABILIZED CONVEYANCE FROM THE DEWATERING DEVICE TO THE WATERWAY MUST BE IDENTIFIED IN THE PLAN. DISCHARGE WATER IS CONSIDERED CLEAN IF IT DOES NOT RESULT IN A VISUALLY IDENTIFIABLE DEGRADATION OF WATER CLARITY.

   F. COFFERDAM REMOVAL WILL TAKE PLACE IN A MANNER TO MINIMIZE THE IMPACT TO THE EXISTING WATERWAY AND TO RESTORE THE WATERWAY TO PRE- CONSTRUCTION CONDITIONS.

   G. DISTURBED SIDE SLOPES MUST BE RE- SEEDED AND STABILIZED WITH AN APPROPRIATE EROSION CONTROL BLANKET PRIOR TO ACCEPTING FLOWS. THE BOTTOM OF THE SWALE MUST BE BROUGHT BACK TO ITS ORIGINAL GRADE AND STABLE ENOUGH TO ACCEPT FLOWS.

4. ALL WORK RELATED TO THE COMPLIANCE OF THE CONDITIONS HEREIN, INCLUDING THE IN-STREAM WORK PLAN, EROSION CONTROL MEASURES, DEWATERING, ETC. WILL NOT BE PAID FOR SEPARATELY, BUT SHALL BE INCLUDED IN THE COST OF THE ASSOCIATED CONTRACT WORK.

...\E5038-sht-ecnotes.dgn
4/27/2018 3:11:52 PM

DESIGN: PKT				
DRAWN: PKT				
CHECKED: RPI				
APPROVED:				
DATE: 11/29/2017				
SCALE: 1" = 20'				
FILE:	NO.	BY	DATE	DESCRIPTION
	REVISIONS			

KEY PLAN:

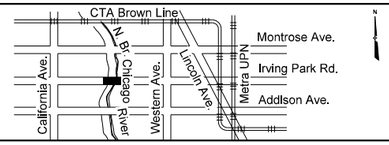

CDOT
CHICAGO DEPARTMENT OF TRANSPORTATION

EJM ENGINEERING, INC.
411 South Wells Street Suite 1000
Chicago, Illinois 60607

W. IRVING PARK ROAD AT NORTH BRANCH CHICAGO RIVER

EROSION AND SEDIMENT CONTROL GENERAL NOTES AND SCHEDULE

PROJECT NO. E-5-038

DRAWING NO. EC–1

CONTRACT NO. XXXXX

EROSION CONTROL NOTES:

FOR EROSION CONTROL NOTES, SEE SHEET EC-1

TOTAL SHEETS	SHEET NO.
184	41

SEDIMENT BASIN NUMBER	EARTH EXCAVATION FOR EROSION CONTROL (28000200) (CU.YD.)	AGGREGATE (EROSION CONTROL) (28001000) (TON)
1	45	1

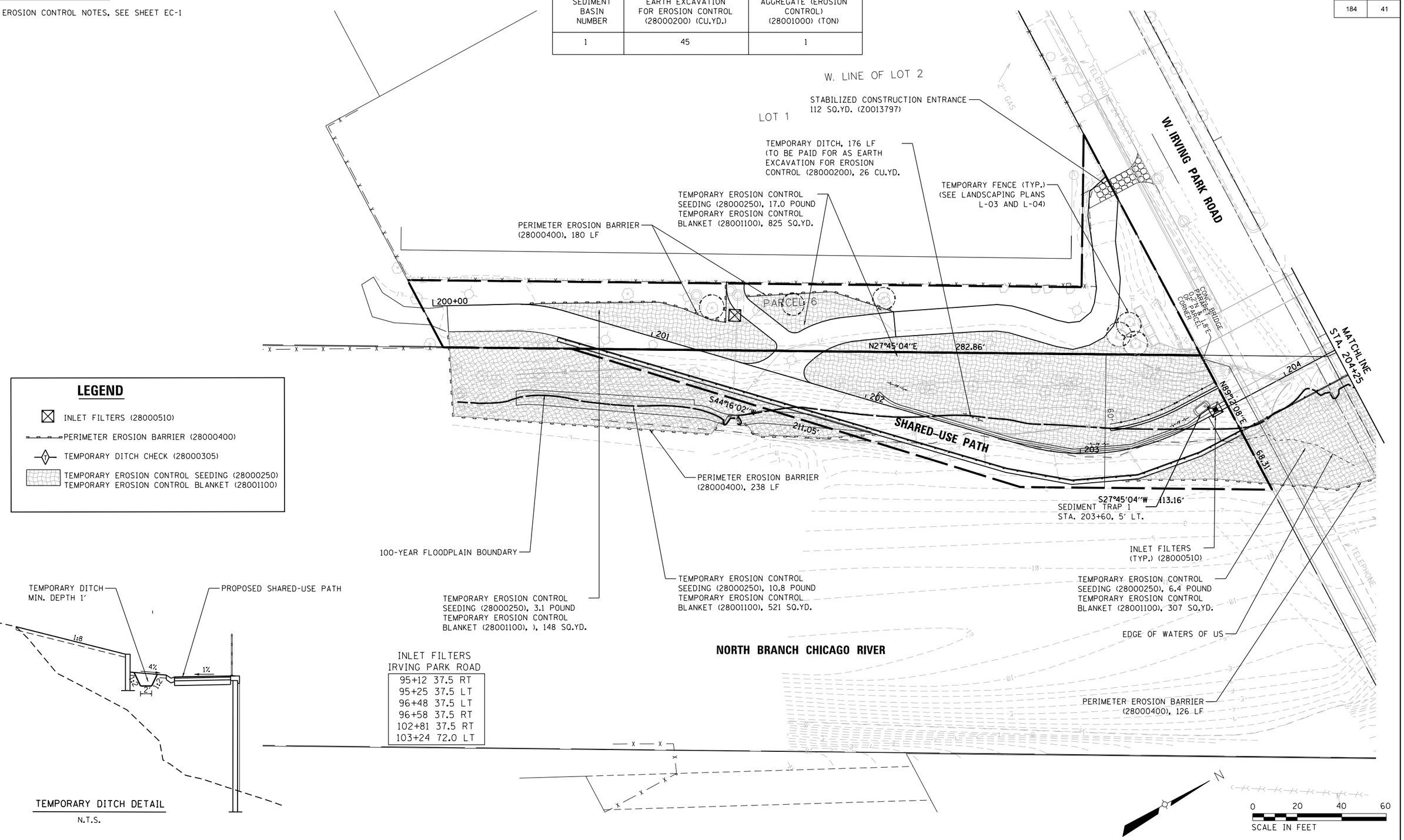

LEGEND

- INLET FILTERS (28000510)
- PERIMETER EROSION BARRIER (28000400)
- TEMPORARY DITCH CHECK (28000305)
- TEMPORARY EROSION CONTROL SEEDING (28000250) TEMPORARY EROSION CONTROL BLANKET (28001100)

TEMPORARY DITCH DETAIL

N.T.S.

INLET FILTERS
IRVING PARK ROAD

95+12 37.5 RT
95+25 37.5 LT
96+48 37.5 LT
96+58 37.5 RT
102+81 37.5 RT
103+24 72.0 LT

...\Cadd Sheets\E5038-sht-ec1
4/27/2018 3:11:55 PM

DESIGN: PKT				
DRAWN: PKT				
CHECKED: RPI				
APPROVED:				
DATE: 11/29/2017				
SCALE: 1" = 20'				
FILE:	NO.	BY	DATE	DESCRIPTION
	REVISIONS			

KEY PLAN:

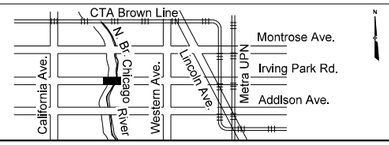

CDOT
CHICAGO DEPARTMENT OF TRANSPORTATION

EJM ENGINEERING, INC.
411 South Wells Street Suite 1000
Chicago, Illinois 60607

W. IRVING PARK ROAD AT NORTH BRANCH CHICAGO RIVER

EROSION AND SEDIMENT CONTROL PLAN

STATION 200+00 TO STATION 204+25

PROJECT NO. E-5-038

DRAWING NO. EC-2

CONTRACT NO. XXXXX

TOTAL SHEETS	SHEET NO.
184	42

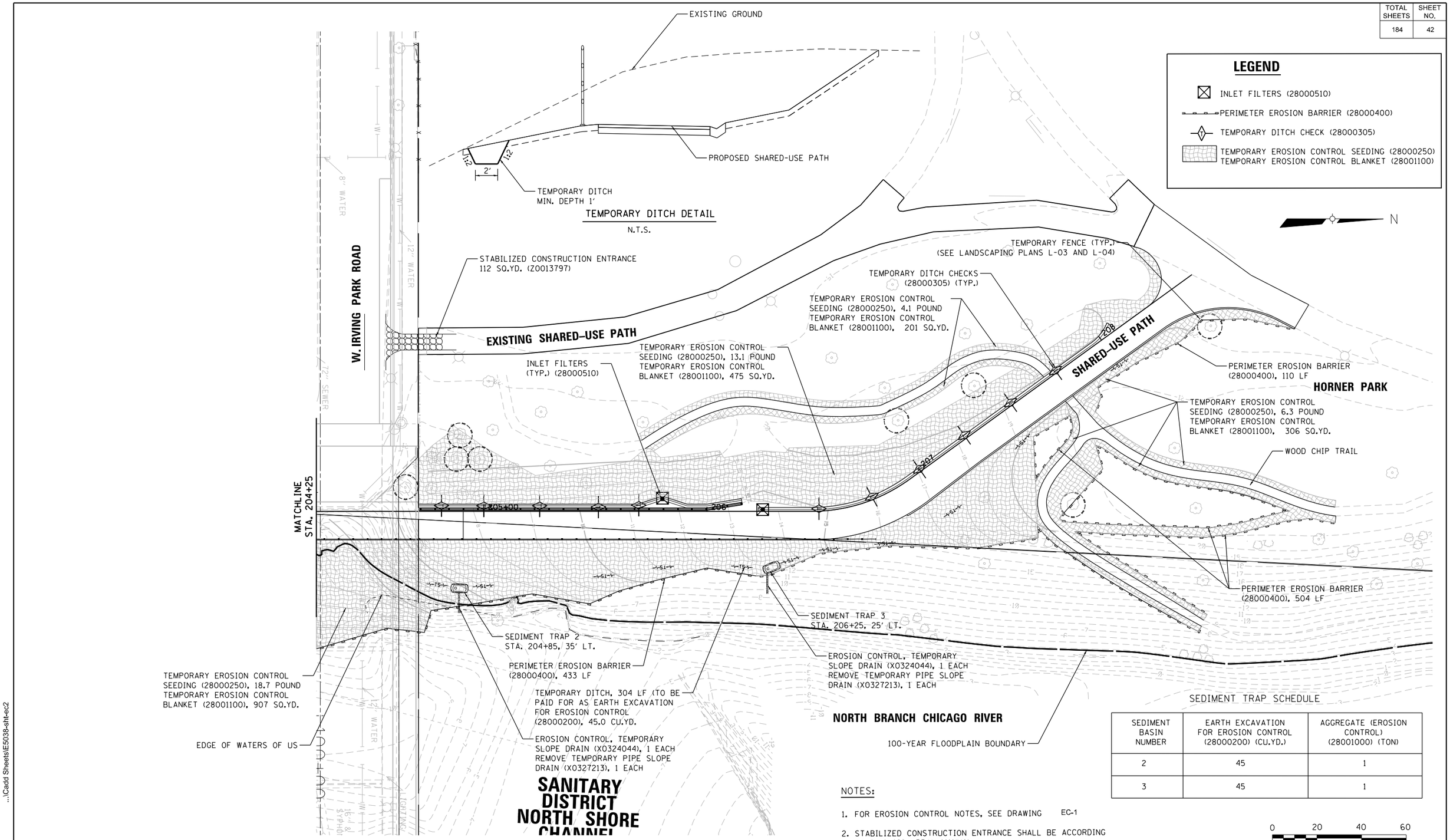

SEDIMENT TRAP SCHEDULE

SEDIMENT BASIN NUMBER	EARTH EXCAVATION FOR EROSION CONTROL (28000200) (CU.YD.)	AGGREGATE (EROSION CONTROL) (28001000) (TON)
2	45	1
3	45	1

NOTES:

1. FOR EROSION CONTROL NOTES, SEE DRAWING EC-1
2. STABILIZED CONSTRUCTION ENTRANCE SHALL BE ACCORDING TO ILLINOIS URBAN MANUAL.

0 20 40 60
SCALE IN FEET

...\Cadd Sheets\E5038-sht-ec2
1/30/2018 3:14:50 PM

DESIGN: PKT					
DRAWN: PKT					
CHECKED: RPI					
APPROVED:					
DATE: 11/29/2017					
SCALE: 1" = 20'					
FILE:	NO.	BY	DATE	DESCRIPTION	
	REVISIONS				

KEY PLAN:

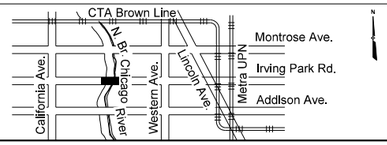

CDOT
CHICAGO DEPARTMENT OF TRANSPORTATION

EJM ENGINEERING, INC.
411 South Wells Street Suite 1000
Chicago, Illinois 60607

W. IRVING PARK ROAD AT NORTH BRANCH CHICAGO RIVER

EROSION CONTROL PLAN

STATION 204+25 TO STATION 208+50

PROJECT NO. E-5-038
DRAWING NO. EC-3
CONTRACT NO. XXXXX

TOTAL SHEETS	SHEET NO.
184	43

NOTES:
1. DISCONNECTED INTERCONNECTED CABLE TO BE PULLED BY CONTRACTOR, ROLLED AND STORED IN MANHOLE WEST OF BRIDGE ON THE SOUTH SIDE OR AS DIRECTED BY OEMC.

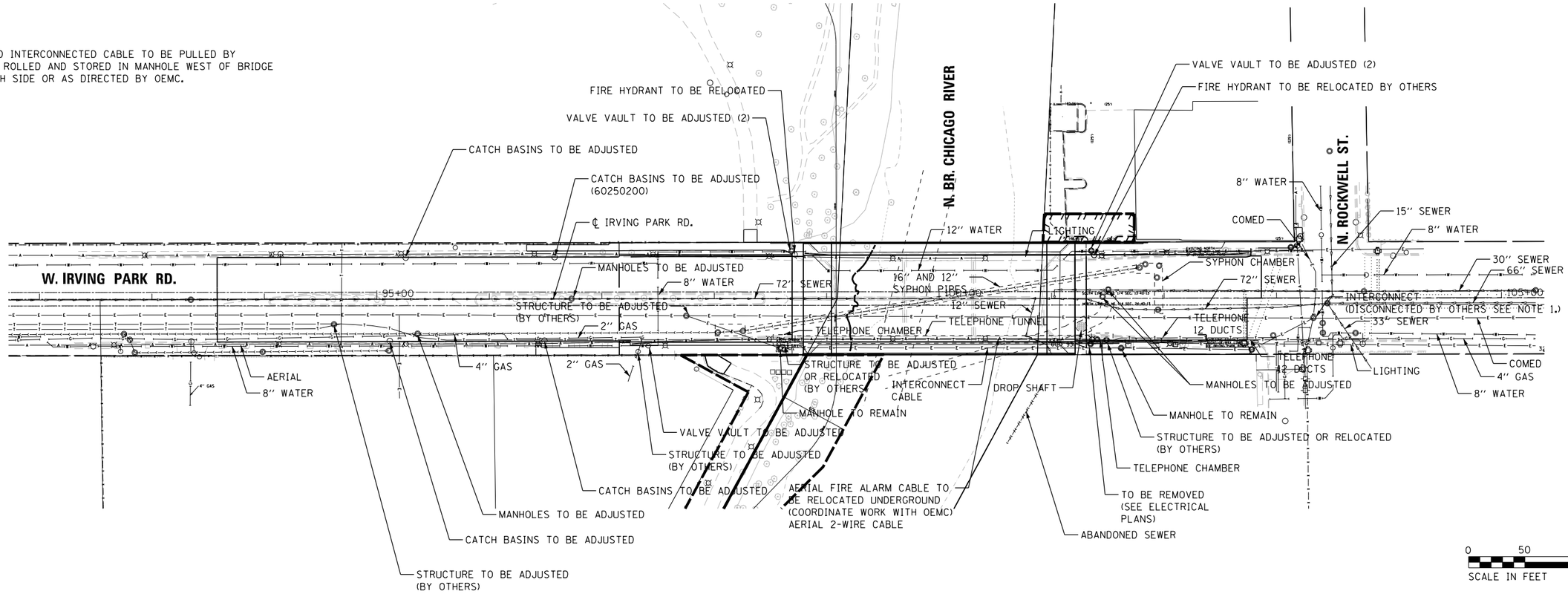

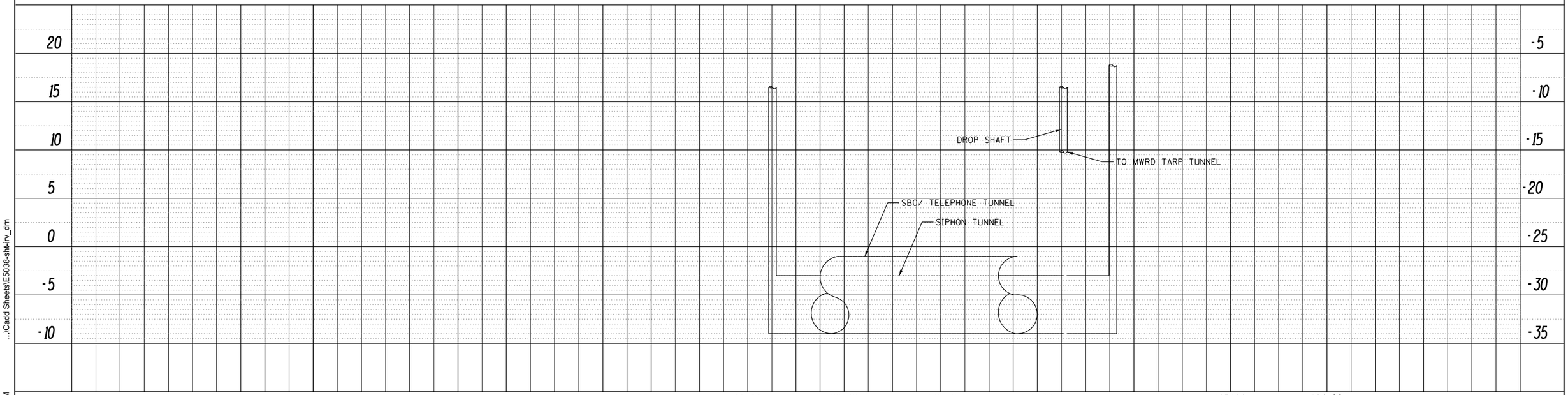

...\Cadd Sheets\E5038-sht-Irv_drn
4/27/2018 3:11:59 PM

DESIGN: SA				
DRAWN: SA				
CHECKED: RI				
APPROVED:				
DATE: 11/29/2017				
SCALE: 1" = 50'				
FILE:	NO.	BY	DATE	DESCRIPTION
	REVISIONS			

KEY PLAN:

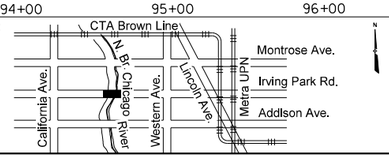

CDOT
CHICAGO DEPARTMENT OF TRANSPORTATION

EJM ENGINEERING, INC.
411 South Wells Street Suite 1000
Chicago, Illinois 60607

W. IRVING PARK ROAD AT NORTH BRANCH CHICAGO RIVER

DRAINAGE AND UTILITY PLAN
IRVING PARK ROAD

PROJECT NO. E-5-038
DRAWING NO. DR-1
CONTRACT NO. XXXXX

TOTAL SHEETS	SHEET NO.
184	44

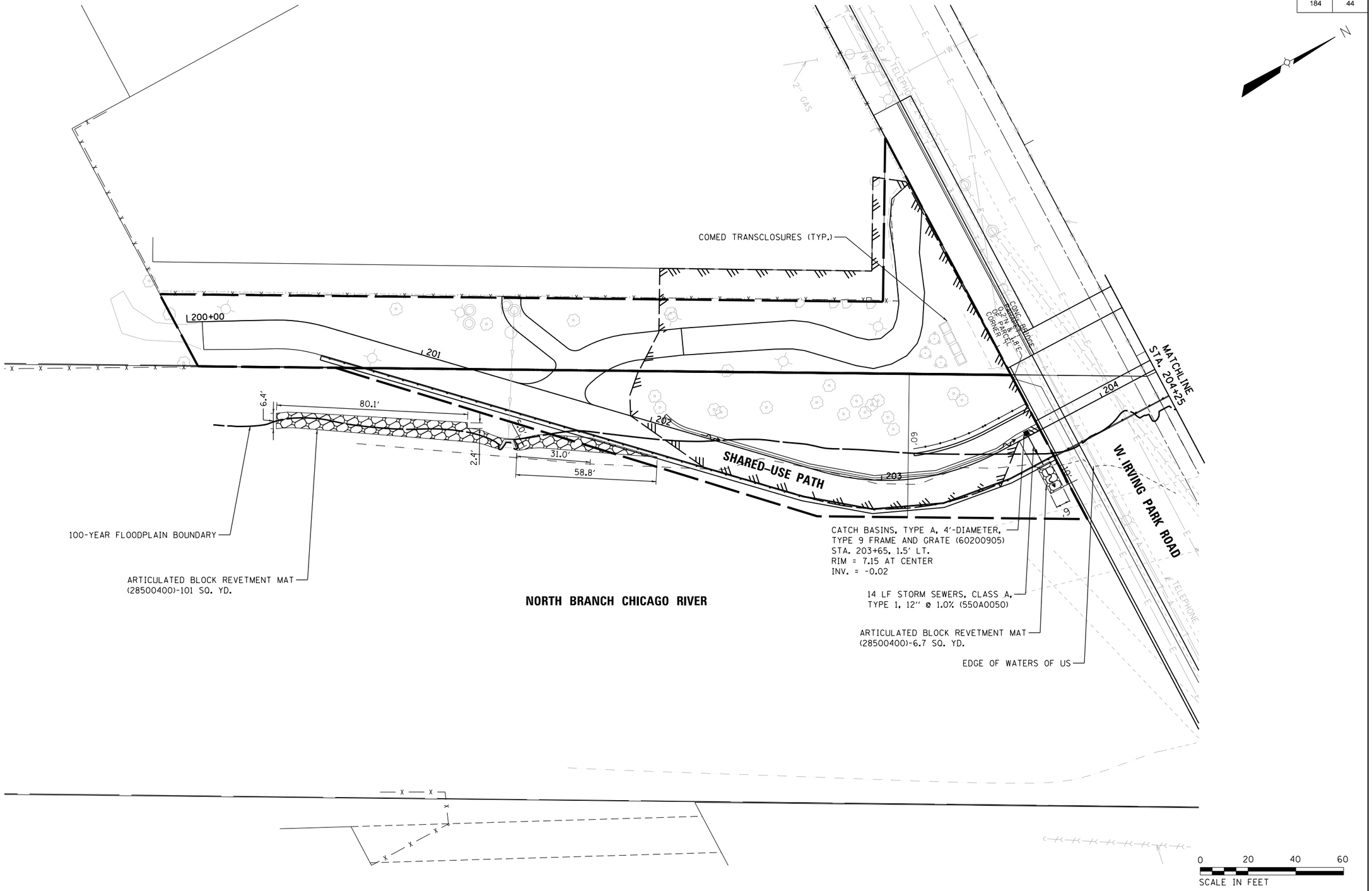

...\E5038-sht-path_dm1
1/30/2018 3:14:53 PM

DESIGN: PKT				
DRAWN: PKT				
CHECKED: RPI				
APPROVED:				
DATE: 11/29/2017				
SCALE: 1" = 20'				
FILE:	NO.	BY	DATE	DESCRIPTION
	REVISIONS			

KEY PLAN:

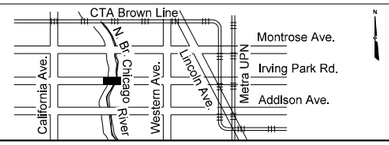

CDOT
CHICAGO DEPARTMENT
OF TRANSPORTATION

EJM ENGINEERING, INC.
411 South Wells Street Suite 1000
Chicago, Illinois 60607

W. IRVING PARK ROAD
AT NORTH BRANCH
CHICAGO RIVER

DRAINAGE AND UTILITY PLAN
SHARED-USE PATH

STATION 200+00 TO STATION 204+25

PROJECT NO.
E-5-038

DRAWING NO.
DR-2

CONTRACT NO. XXXXX

TOTAL SHEETS	SHEET NO.
184	45

N

W. IRVING PARK ROAD

8" WATER

12" WATER

72" SEWER

MATCHLINE
STA. 204+25

41.5 LF STORM SEWERS,
CLASS A, TYPE 1, 12"
@ 1% (550A0050)

MANHOLES, TYPE A, 4'-DIAMETER,
TYPE 1 FRAME, CLOSED LID (60218400)
STA. 206+25, 12.0' LT.
RIM = 16.48, INV. = 8.94

7.1 LF STORM SEWERS,
CLASS A, TYPE 1, 12"
@ 1% (550A0050)

SHARED-USE PATH

CATCH BASINS, TYPE A, 4'-DIAMETER,
TYPE 10 FRAME AND GRATE (60201005)
STA. 206+25, FLOW LINE AT 0.75' LT.
FLOW LINE EL. = 13.56, INV. = 6.31

34.5 LF STORM SEWERS, CLASS A,
TYPE 1, 12" @ 1% (550A0050)

17'

6'

PRECAST REINFORCED CONCRETE FLARED
END SECTIONS 12" (54213657)

ARTICULATED BLOCK REVETMENT MAT
(28500400), 11.3 SQ. YD.

INLETS, TYPE A, TYPE 10 FRAME AND GRATE (60236700)
STA. 205+80, FLOW LINE AT 5.75' LT.
FLOW LINE EL. = 15.59, INV. = 9.72

100-YEAR FLOODPLAIN BOUNDARY

EDGE OF WATERS OF US

12" WATER

16" & SYPHON

LIGHTING

NORTH BRANCH CHICAGO RIVER

0 20 40 60
SCALE IN FEET

...\E5038-sht-path_drn2
1/30/2018 3:14:56 PM

DESIGN: PKT				
DRAWN: PKT				
CHECKED: RPI				
APPROVED:				
DATE: 11/29/2017				
SCALE: 1" = 20'				
FILE:	NO.	BY	DATE	DESCRIPTION
	REVISIONS			

KEY PLAN:

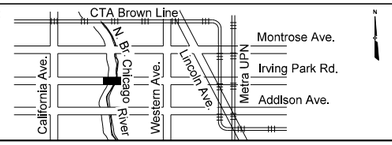

CDOT
CHICAGO DEPARTMENT OF TRANSPORTATION

EJM ENGINEERING, INC.
411 South Wells Street Suite 1000
Chicago, Illinois 60607

W. IRVING PARK ROAD AT NORTH BRANCH CHICAGO RIVER

DRAINAGE AND UTILITY PLAN
SHARED-USE PATH

STATION 204+25 TO STATION 208+50

PROJECT NO. E-5-038

DRAWING NO. DR-3

CONTRACT NO. XXXXX

TOTAL SHEETS	SHEET NO.
184	46

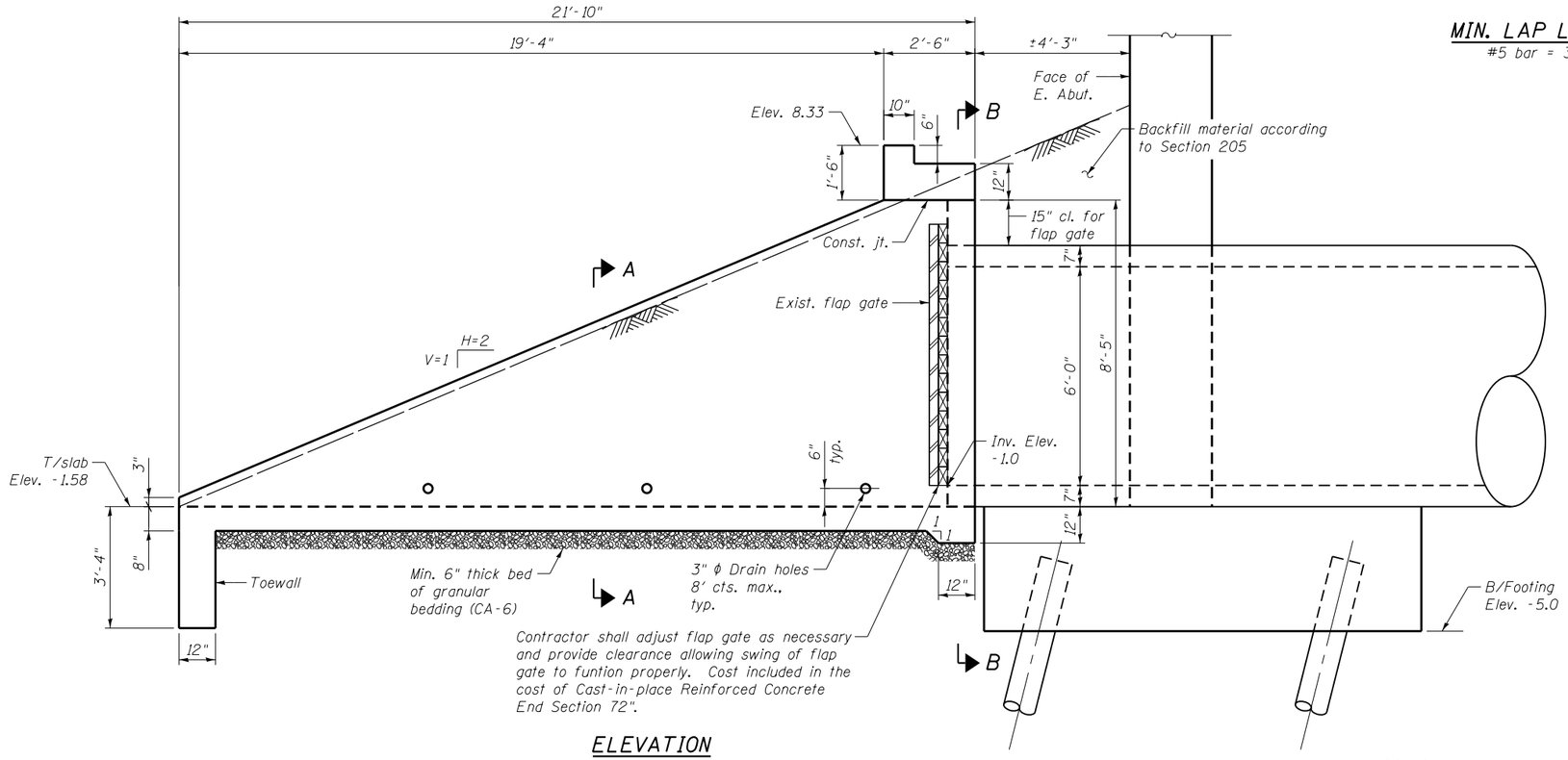

ELEVATION

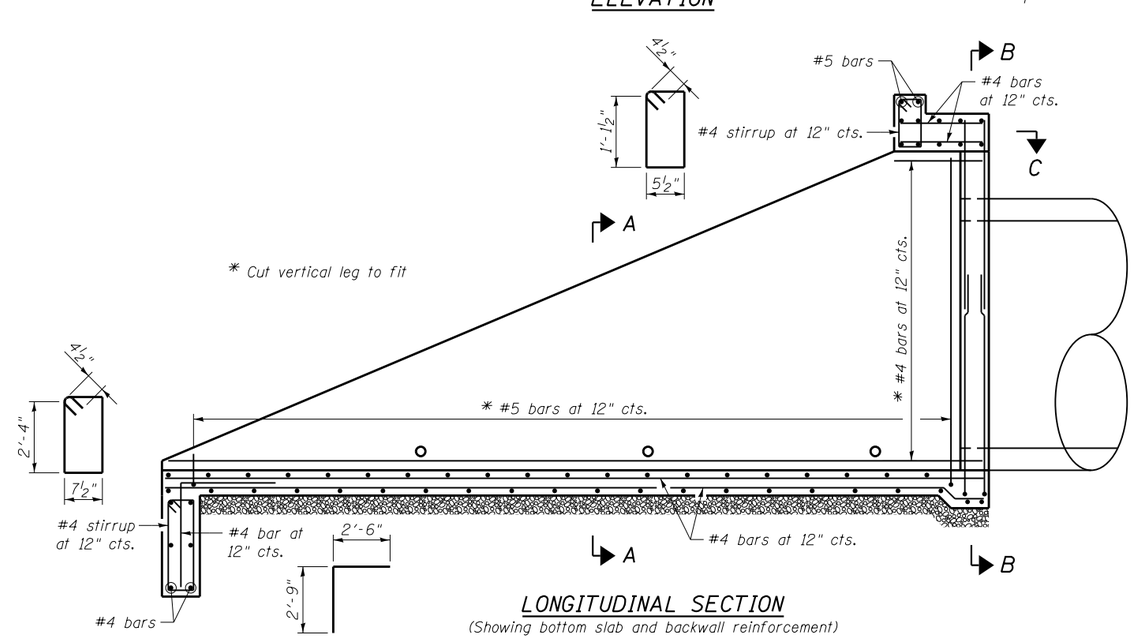

LONGITUDINAL SECTION

(Showing bottom slab and backwall reinforcement)

MIN. LAP LENGTH

#5 bar = 3'-4"

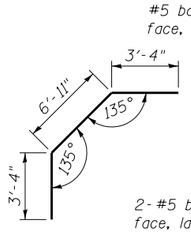

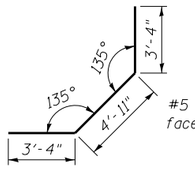

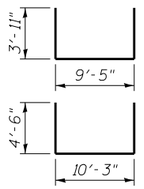

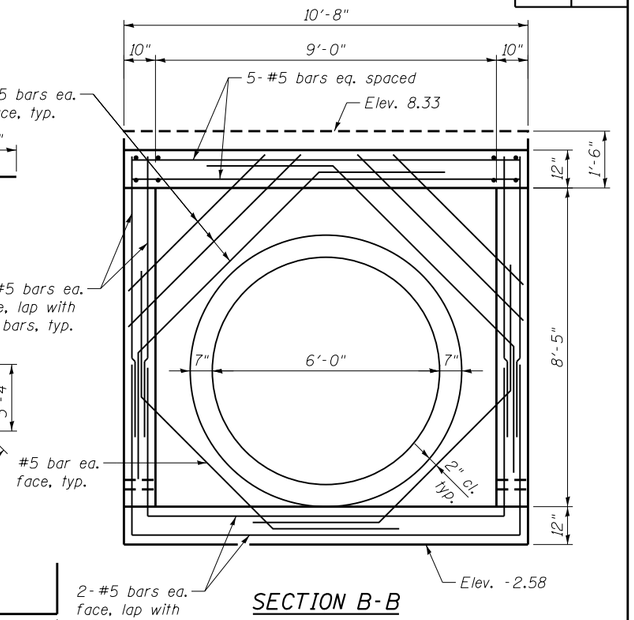

SECTION B-B

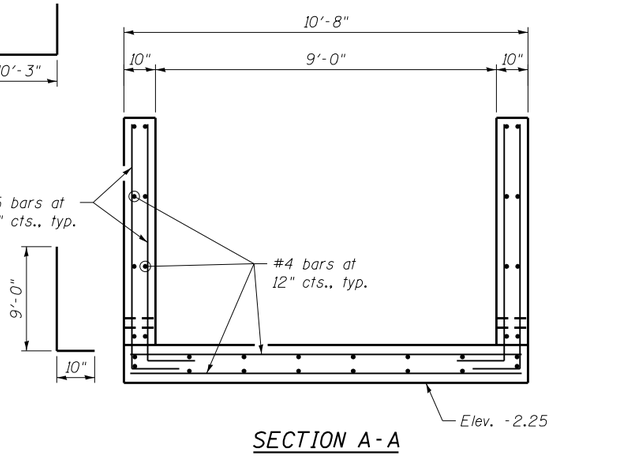

SECTION A-A

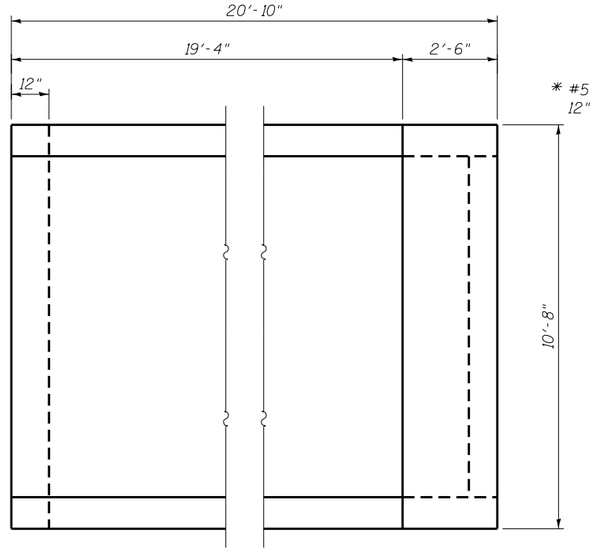

VIEW C-C

NOTES

1. Use 2" clear cover for reinforcing bars unless noted otherwise.

BILL OF MATERIAL

ITEM	UNIT	QUANTITY
Cast-in-place Reinforced Concrete End Section 72"	Each	1

DESIGN:	CA			
DRAWN:	LAM			
CHECKED:	DF			
APPROVED:	DF			
DATE:	11/29/2017			
SCALE:				
FILE:	NO.	BY	DATE	DESCRIPTION
	REVISIONS			

KEY PLAN:

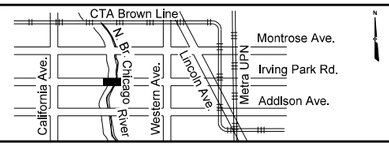

CDOT
CHICAGO DEPARTMENT OF TRANSPORTATION

BOWMAN, BARRETT & ASSOCIATES INC.
CONSULTING ENGINEERS
Chicago, Illinois
312.228.0100
www.bbandainc.com

W. IRVING PARK ROAD AT NORTH BRANCH CHICAGO RIVER

CONCRETE END SECTIONS FOR PIPE CULVERTS STRUCTURE NO. 016-6090

PROJECT NO. E-5-038

DRAWING NO. DR-4

CONTRACT NO. XXXXX

...\E5038-sht-endsect.dgn

11/29/2017 1:37:50 PM

TOTAL SHEETS	SHEET NO.
184	47

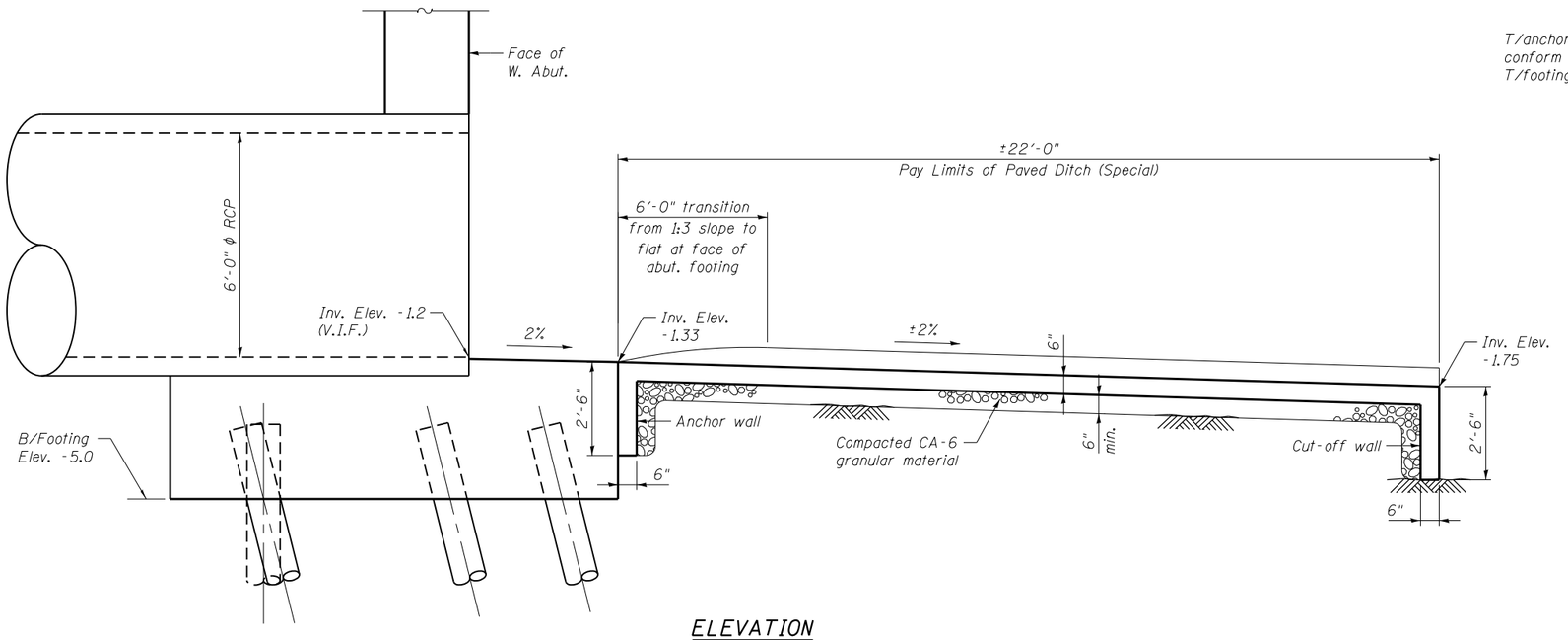

ELEVATION

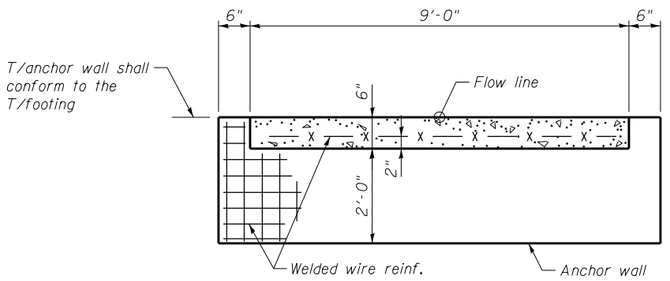

SECTION A-A

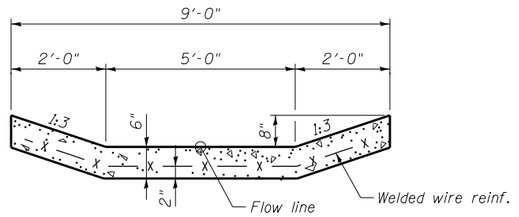

SECTION B-B

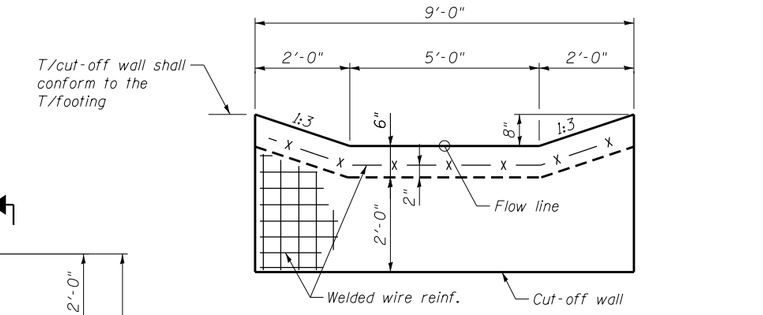

VIEW C-C

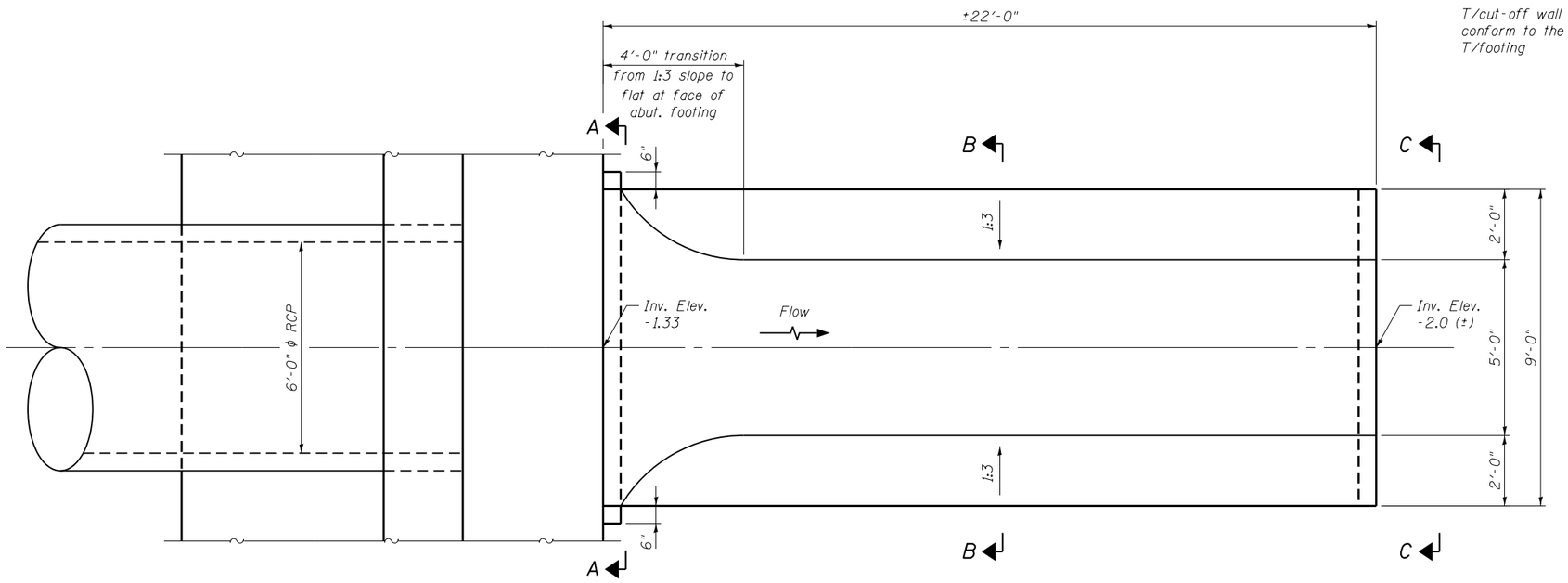

PLAN

NOTES

1. All slopes are expressed as of vertical displacement to units of horizontal displacement (V:H).
2. Paved ditch inverts taken at flow line.
3. Welded wire fabric, 6inx6in - W4.0xW4.0, weighing 58 lbs per sq. ft.
4. Cost of CA-6 material not measured for payment, but shall be included in the cost of Paved Ditch (Special).

BILL OF MATERIAL

ITEM	UNIT	QUANTITY
Paved Ditch (Special)	Foot	22

...\E5038-sht-paveddtich.dgn
11/29/2017 1:37:52 PM

DESIGN: CA				
DRAWN: LAM				
CHECKED: DF				
APPROVED: DF				
DATE: 11/29/2017				
SCALE:				
FILE:	NO.	BY	DATE	DESCRIPTION
	REVISIONS			

KEY PLAN:

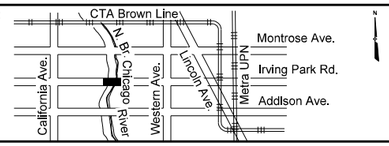

CDOT
CHICAGO DEPARTMENT OF TRANSPORTATION

BOWMAN, BARRETT & ASSOCIATES INC.
CONSULTING ENGINEERS
Chicago, Illinois
312.228.0100
www.bbandainc.com

W. IRVING PARK ROAD AT NORTH BRANCH CHICAGO RIVER

PAVED DITCH FOR PIPE CULVERT STRUCTURE NO. 016-6090

PROJECT NO. E-5-038
DRAWING NO. DR-5
CONTRACT NO. XXXXX

TOTAL SHEETS	SHEET NO.
184	48

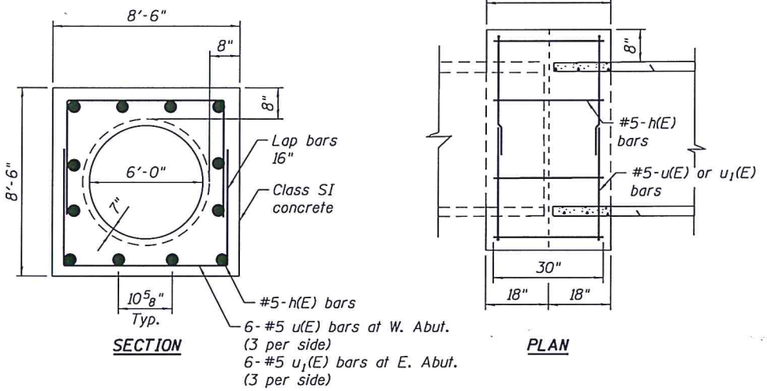

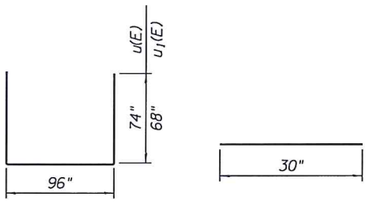

#5 u BAR #5 h BAR

PIPE TO PIPE REINFORCED CONCRETE COLLAR DETAIL

Scale: N.T.S.

* Contractor shall verify invert elevation of existing sewer line at the collar location. As necessary, the proposed pipe and collar may be installed with a maximum vertical elevation drop of 1 foot in order to meet the proposed pipe invert elevation at the face of the abutment and maintain the longitudinal slope shown. If a larger drop in elevation is required, the Contractor shall notify the Engineer.

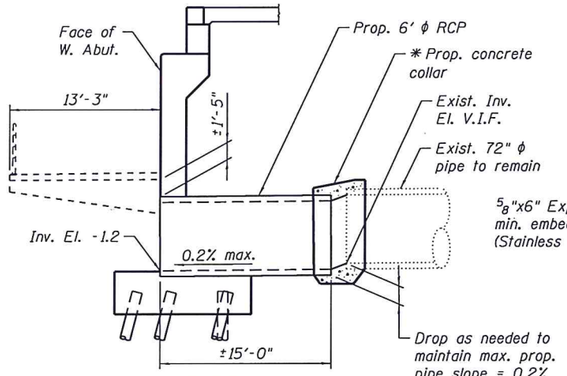

SECTION A-B

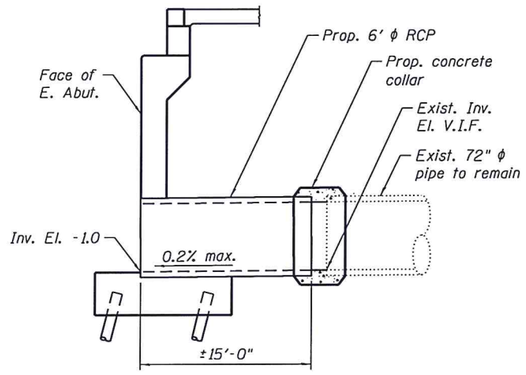

SECTION B-B

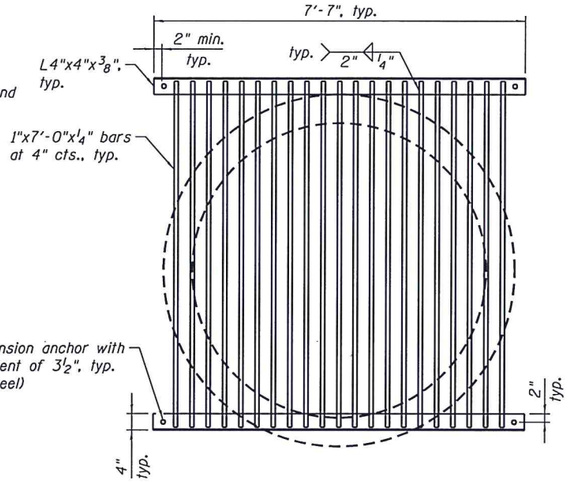

PIPE GRATE DETAIL

BILL OF MATERIAL

BAR	NO.	SIZE	LENGTH	SHAPE
h(E)	72	5	2'-6"	——
u(E)	6	5	20'-4"	⊔
u1(E)	6	5	19'-4"	⊔
Concrete Collar			Cu Yd	10
Reinforcement Bars, Epoxy Coated			Pound	405
Grating for Concrete Headwall No. 1			Each	1

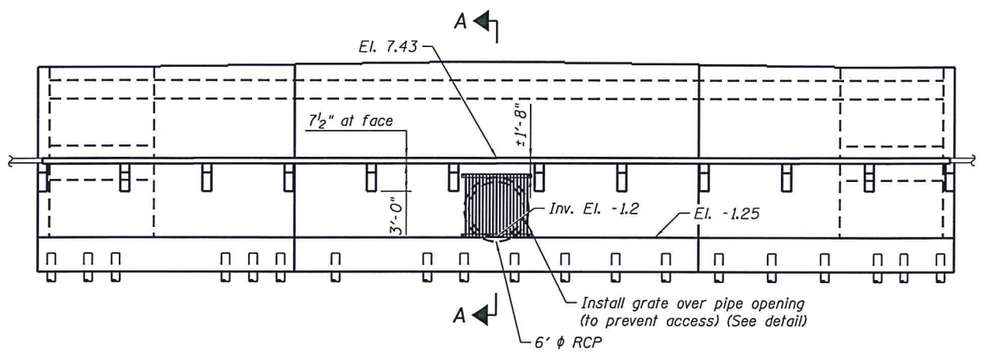

WEST ABUTMENT ELEVATION

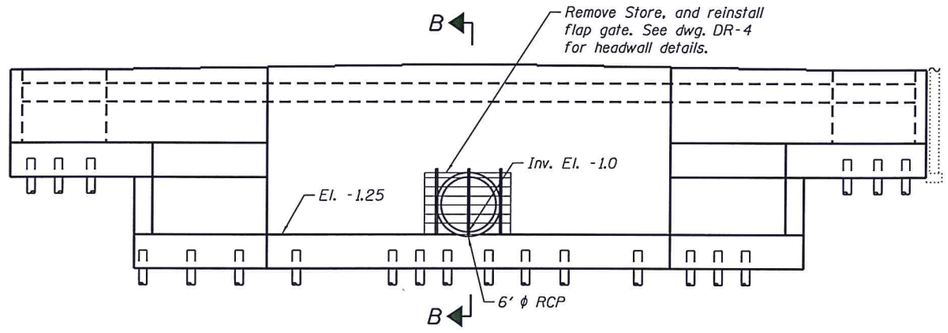

EAST ABUTMENT ELEVATION

Concrete Collar Notes:

1. All items and materials shall conform to the latest IDOT SSRBC Specifications, unless otherwise noted in Supplemental Specifications for the specific project being constructed.
2. All concrete shall conform to IDOT SSRBC Article 1020.04, Class SI, with a compressive strength of 3500 psi.
3. All epoxy coated reinforcement bars shall conform to IDOT SSRBC Section 508, and Article 1006.10.
4. Unless otherwise shown, the cover for reinforcing steel shall be as follows: a) Concrete cast against permanently expose earth: 3" b) All other reinforcing bars: 2"
5. Concrete collars shall be used at all existing/proposed pipe connections. Trim existing pipe end to provide flush butt joint, install rebar, and place concrete collar.
6. The Contractor shall provide all measures and precautions necessary to prevent damage to the existing sewer during construction. Contractor shall adequately brace or shore existing sewer if required to maintain integrity of sewer during construction. Submit design and details, sealed and signed by an Illinois licensed structural Engineer, showing temporary bracing for the existing sewer during construction for review prior to construction. Any damage to the existing structure is the responsibility of the Contractor.
7. Contractor shall divert all flow from the existing sewer prior to construction so that the work can be performed in the dry condition. Sewer must be maintained in service at all times. Submit means of flow diversion for review prior to breaking into existing brick sewer. All excavation shall be kept dewatered during construction operations until backfill in place. Provisions shall be made to prevent the bottom of all excavations from freezing or flooding at all times. Plan dimensions and details relative to existing structure shall be subject to nominal construction variations. It shall be Contractor's responsibility to verify such dimensions and details in the field and make necessary approved adjustments prior to construction or ordering materials. Such variations shall not be cause for additional compensation for a change in the scope of the work, however, Contractor will be paid for the quantity actually furnished at the unit price of the work.

DANIEL S FILICE
081-007107
LICENSED STRUCTURAL ENGINEER
STATE OF ILLINOIS

Signed: _____

Date: November 29, 2017

Expires: November 30, 2018

...\0166090-E5038-045-CCD.dgn
11/29/2017 1:37:54 PM

DESIGN:				
DRAWN:				
CHECKED:				
APPROVED: DF				
DATE: 11/29/2017				
SCALE:				
FILE:	NO.	BY	DATE	DESCRIPTION
	REVISIONS			

KEY PLAN:

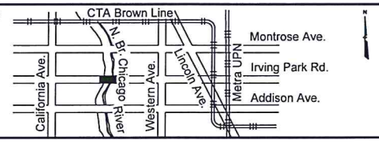

CDOT
CHICAGO DEPARTMENT OF TRANSPORTATION

BOWMAN, BARRETT & ASSOCIATES INC.
CONSULTING ENGINEERS
Chicago, Illinois
312.228.0100
www.bbandainc.com

W. IRVING PARK ROAD AT NORTH BRANCH CHICAGO RIVER

CONCRETE COLLAR DETAILS

PROJECT NO.	E-5-038
DRAWING NO.	DR-6
CONTRACT NO.	XXXXX

TOTAL SHEETS	SHEET NO.
184	49

LEGEND

- Existing watermain to be removed or abandoned
- Existing watermain to remain
- Proposed permanent watermain
- Existing bridge line work
- Final proposed bridge line work
- Proposed valve vault ("V")
- Existing valve vault ("V")
- Existing fire hydrant
- Proposed fire hydrant
- Watermain cap
- Watermain bends

BILL OF MATERIAL

ITEM	UNIT	TOTAL
Ductile Iron Water Main 12"	Foot	535
Fire Hydrants to be Removed	Each	3
Fire Hydrants	Each	2

(1) Valve Basin - 12" MJ valve and fire hydrant.

(2A) Watermain - 12" diameter D.I.P.

(2B) Watermain - 12" diameter D.I.P. Provide restrained joints, hanger system support pipe from proposed bridge deck. Provide pipe insulation. See additional details on sheet WM-2.

(2C) Watermain - 12" diameter D.I.P. and 4-12" dia. x 22.5° elbow for vertical adjustment, with restrained joints. Provide insulation. See detail on sheet WM-2 for limits of restrained joints and additional details.

(2D) Expansion coupler at each abutment. See detail on sheet WM-2.

(3) Bend - 12"x90° w/thrust block (Std. D-11), ±110' W.W.L. Rockwell St., 6' N.S.L. Irving Park Rd.

(4) Valve Basin - 12" MJ valve, 12"-dia x 90° bend w/thrust block (Std D-11), and 12" dia. Cap. 110' W.W.L. Rockwell St. Connection to existing water main to be performed by DWM.

(5) Flush new fire hydrant and pipe, pressure test, and chlorinate. See special provisions.

(6A) Remove existing 90° elbow. Install 12"x8" reducer and connect to existing 8" dia. D.I.P. Remove existing valve and abandon valve basin. Connection to existing water main to be performed by DWM.

(6B) Fire hydrant - 800' W.W.L. of Rockwell St. off of the existing 8" Water Main (to be performed by DWM).

(7) Install 8"x8" tee connection and cap abandoned water main. Connection to existing water main performed by DWM.

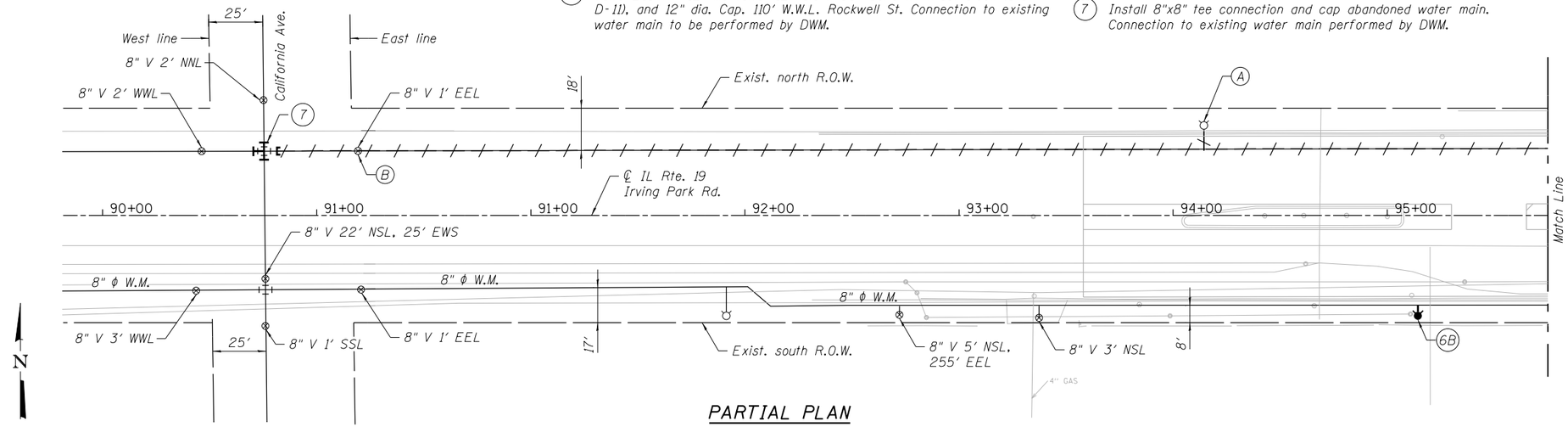

PARTIAL PLAN

(A) Remove and salvage existing fire hydrant, and deliver it to the district yard as directed by the Commissioner. Cost included in the cost of Fire Hydrants to be Removed. (3 fire hydrants)

(B) The existing valve basin is to be abandoned. Remove the frame and lid and fill the basin with approved backfill material CA-16. Remove and salvage the existing frame and lid, and deliver to the district yard as directed by the Commissioner. Cost included in the cost of Ductile Iron Water Main 12". (3 valve basins)

Chlorination and Testing of Piping:
Swab pipe and fittings that will not be chlorinated with chlorine solution during installation. Visually inspect at operating pressure prior to backfilling. Comply with all standards and requirements of the Bureau of Water Quality (312) 744-8190.

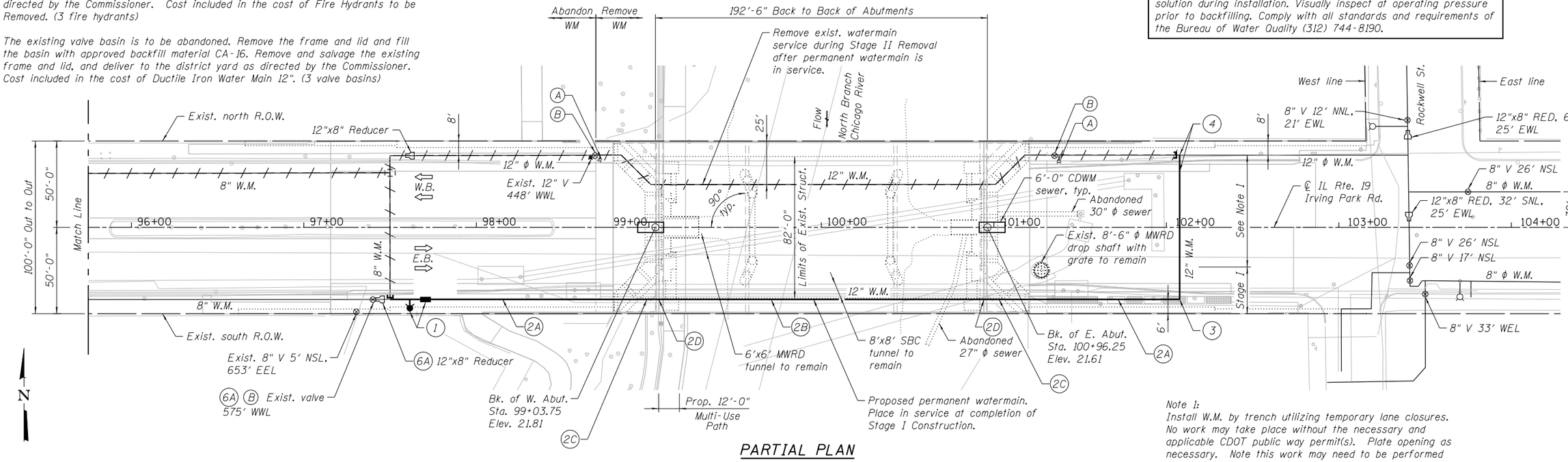

PARTIAL PLAN

Note 1:
Install W.M. by trench utilizing temporary lane closures. No work may take place without the necessary and applicable CDOT public way permit(s). Plate opening as necessary. Note this work may need to be performed prior to beginning Stage I traffic configuration.

DESIGN:				
DRAWN:				
CHECKED:				
APPROVED: DF				
DATE: 11/29/2017				
SCALE:				
FILE:	NO.	BY	DATE	DESCRIPTION
	REVISIONS			

KEY PLAN:

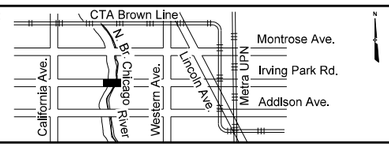

CDOT
CHICAGO DEPARTMENT OF TRANSPORTATION

BOWMAN, BARRETT & ASSOCIATES INC.
CONSULTING ENGINEERS
Chicago, Illinois
312.228.0100
www.bbandainc.com

W. IRVING PARK ROAD AT NORTH BRANCH CHICAGO RIVER

WATERMAIN RELOCATION PLAN
STRUCTURE NO. 016-6090

PROJECT NO. E-5-038
DRAWING NO. WM-1
CONTRACT NO. XXXXX

...\E5038-sht-watermain01.dgn
4/27/2018 3:12:02 PM

TOTAL SHEETS	SHEET NO.
184	50

GENERAL NOTES

1. Contact John Barbaro at john.barbaro@ctrwater.net two (2) weeks prior to the anticipated start of construction date such that a Resident Engineer can be assigned to this project. Failure to comply with this requirements may result in additional expenses to the proposed project to verify that all work conforms to DWM's standards.
2. The Contractor must submit to the DWM copies of the shop drawings for all materials to be used. All materials must be approved by the DWM prior to starting construction.
3. The Contractor must obtain a "B-permit" prior to construction from the City of Chicago, Department of Buildings, Plumbing Permit & Plan Section, City Hall, 121 N LaSalle Street, Room 906.
4. All valve operations are to be completed by the DWM.
5. If construction requires the use of water from a city fire hydrant, permits must be obtained from the City of Chicago, Department of Buildings, Plumbing Permit & Plan Section, City Hall, 121 N La Salle Street, Room 906.
6. The Contractor shall be responsible for staking-out all proposed horizontal and vertical facilities for the DWM as required for construction.
7. The Contractor shall be responsible for obtaining all applicable permits (including a sewer permit from the Department of Buildings Sewer Section), excavation/osha shoring, backfilling/compaction, and all restoration to CDOT standards as required for construction per the DWM involvement letter for this project.
8. The Contractor shall be responsible for maintaining water services and fire protection during construction.
9. The Contractor shall maintain drainage at all times.
10. The Contractor shall be responsible for obtaining exact locations and elevations of all the utilities from the owners of the respective utilities.
11. The Contractor is responsible for resolving any utility conflicts, and/or verifying that any utility in conflict with the proposed water main has been relocated.
12. The Contractor shall provide the DWM with two copies of a redline marked-up as-built drawing of the water main installation with any design changes that have been made. This drawing shall note exact locations of the water mains, valves, fittings, connections to existing water mains, services, and any special installations. Locations shall be referenced to street right-of-ways, and the depth of cover shall also be indicated. The as-built shall be signed and dated by the Contractor's project coordinator, along with their contact information.
13. No water service connections or taps can be made until the water main has been approved by the DWM and is in service. Individual water service tap permits must be issued by the Department of Buildings Plumbing Permit and Plan Desk, and meters must be installed prior to the service connection being made by the DWM.
14. Notes indicating S.N.L., E.W.L., etc., mean south of the north property line, east of the west property line, etc. And are measured from the nearest street.
15. If a standard mechanical joint sleeve does not fit to make connection of the new pipe to the existing pipe, a transition sleeve must be used. No grinding of the existing pipe is permitted.
16. House drains are not shown on the drawings. The Contractor must locate all house drains within the area of excavation and make adjustments and/or repairs.
17. Abandon existing water mains in accordance with the specifications.
18. The Contractor shall be responsible for painting the curb in front of fire hydrants. The cost of curb painting shall be included in the cost of Combination Concrete Curb and Gutter, Type B-V.12. See Special Provisions.
19. See Dept. of Water Management special provisions located in Appendix A of Book 3 Special Provisions for this Contract.

* Suggested water main hanger spacing shown. Spacing of water main hangers to be adjusted as needed to avoid conflicts with diaphragms or water main joints. Hangers shall not be spaced at more than 7'-6" cts. max. Additional hangers that are required due to adjustments shall be provided by the Contractor at no additional cost to the Contract and shall be approved by the Commissioner.

Note A:
Install pipe and hanger system to provide a minimum of 10'-0" vertical clearance over the multi-use path.

Note B:
A self-curing rubber seal w/water stop shall be installed in opening as directed by the Commissioner. Cost included with Ductile Iron Water Main 12".

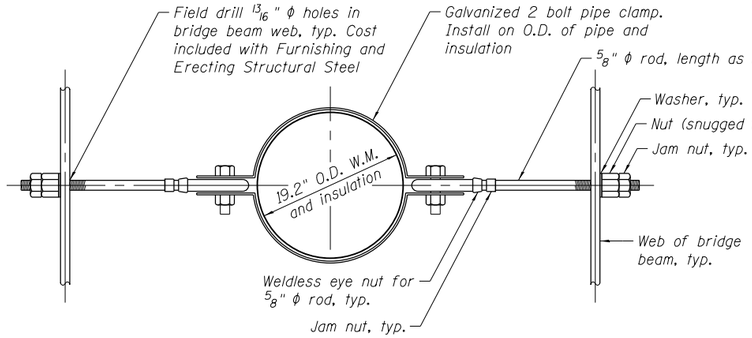

HORIZONTAL STABILIZER DETAIL

Note: The Contractor shall clean and paint the bare metal exposed due to drilling according to Section 506 of the Standard Specifications. The paint color shall match the existing color of the girder and shall cover the bare metal. Cost included with Furnishing and Erecting Structural Steel. (20 Locations)

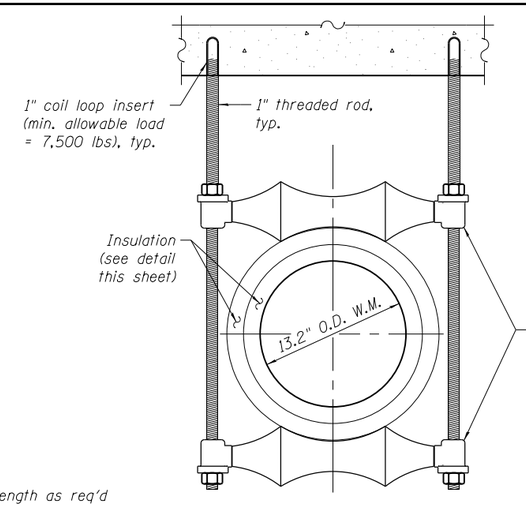

TYPE A HANGER ASSEMBLY

(Min. req'd safe working load for hanger assembly = 1,200 lbs.)

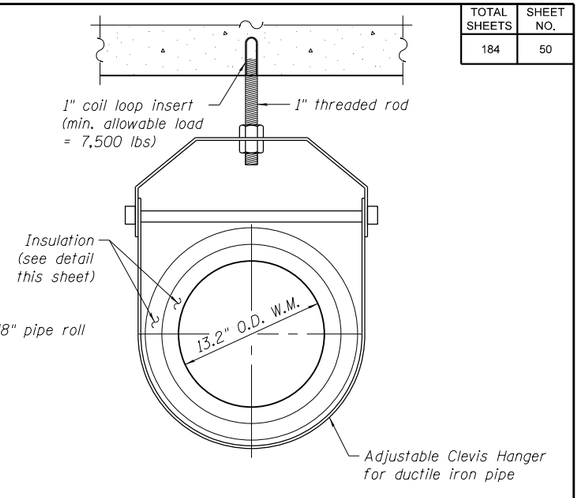

TYPE B HANGER ASSEMBLY

(Min. req'd safe working load for hanger assembly = 1,200 lbs.)

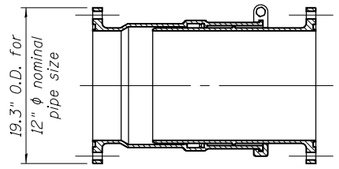

EXPANSION COUPLER DETAIL

Note: Expansion coupler must be able to accommodate a minimum of 2" of expansion/contraction. (2 Locations)

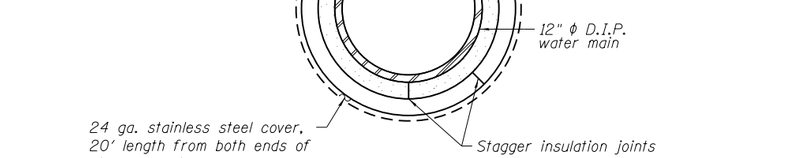

INSULATION DETAIL

Note C:
Prior to ordering materials, Contractor shall submit manufacturer's cut sheets to the Commissioner for review and approval. See special provisions and note 19 for additional requirements.

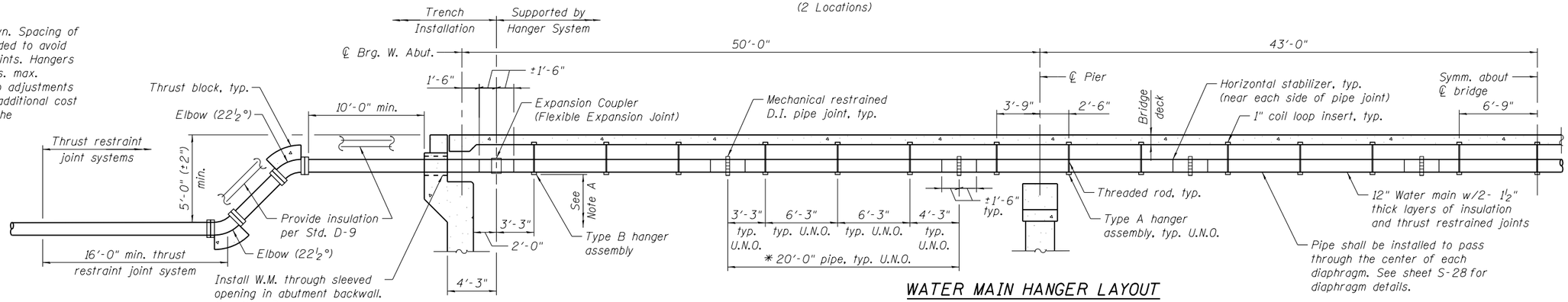

WATER MAIN HANGER LAYOUT

DESIGN:				
DRAWN:				
CHECKED:				
APPROVED: DF				
DATE: 11/29/2017				
SCALE:				
FILE:	NO.	BY	DATE	DESCRIPTION
	REVISIONS			

KEY PLAN:

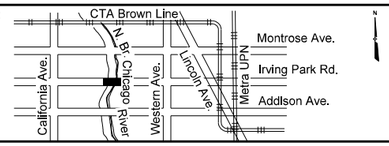

CDOT
CHICAGO DEPARTMENT OF TRANSPORTATION

BOWMAN, BARRETT & ASSOCIATES INC.
CONSULTING ENGINEERS
Chicago, Illinois
312.228.0100
www.bbandainc.com

W. IRVING PARK ROAD AT NORTH BRANCH CHICAGO RIVER

WATERMAIN DETAILS
STRUCTURE NO. 016-6090

PROJECT NO. E-5-038
DRAWING NO. WM-2
CONTRACT NO. XXXXX

11/29/2017 1:38:00 PM ...\E5038-sht-watermain02.dgn

TOTAL SHEETS	SHEET NO.
184	51

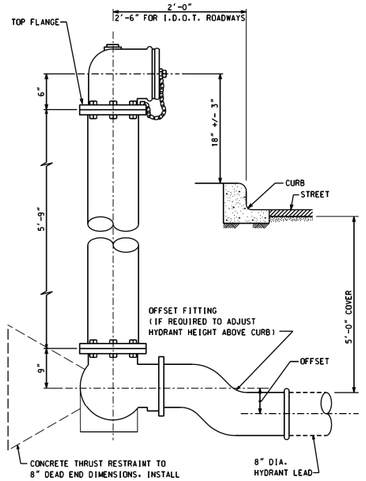

NOTE:

1. SEE FIRE HYDRANT DRAIN DETAILS.
2. ALL BURRIED DUCTILE IRON HYDRANT COMPONENTS MUST BE WRAPPED IN POLYETHYLENE ENCASEMENT.
3. SEE DETAIL D-5 FOR FIRE HYDRANT DRAIN ASEMBLY

REV:04.09 FIRE HYDRANT SETTING DETAIL D-2

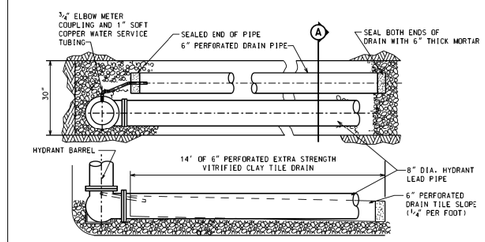

LAYING CONDITION

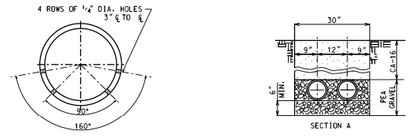

DETAIL "A"
DRAIN TILE DRAIN HOLES

TILE PIPE & HYDRANT BRANCH
EMBEDDED IN PEA GRAVEL

NOTES:

1. WATER TABLE MUST BE BELOW BOTTOM OF TRENCH.
2. LAY DRAIN PIPE IN WATER MAIN TRENCH IF HYDRANT LEAD PIPE IS NOT LONG ENOUGH TO ACHIEVE 14' DRAIN PIPE LENGTH.
3. PLACE DRAIN PIPES SO HOLES ARE FACING DOWN. SEE DETAIL A.
4. COPPER WATER SERVICE TUBING MUST BE ENCASED IN POLYETHYLENE WRAP.

REV:04.09 FIRE HYDRANT DRAIN DETAIL D-5

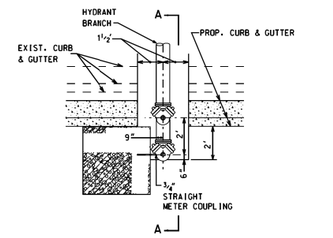

VIEW "A-A"

NOTE:
WATER TABLE MUST BE BELOW
BOTTOM OF DRAIN SUMP.

REV:04.07 FIRE HYDRANT SUMP DRAIN FOR RELOCATED HYDRANTS D-6

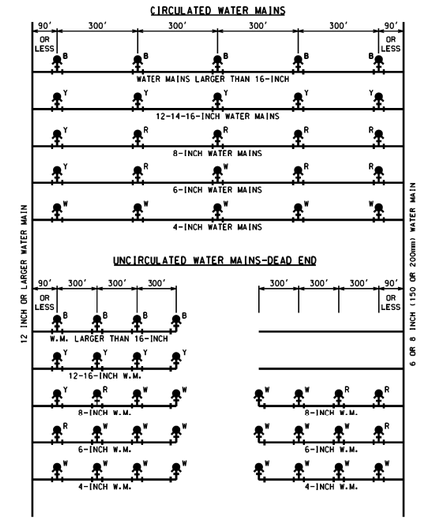

B-BLUE FLANGE Y-YELLOW FLANGE R-RED FLANGE W-WHITE FLANGE
ALL PUBLIC FIRE HYDRANTS ARE TO BE PAINTED RED EXCEPT FOR THE TOP FLANGES WHICH MUST BE COLOR CODED.

REV:04.07 COLOR CODE FOR FIRE HYDRANTS D-7

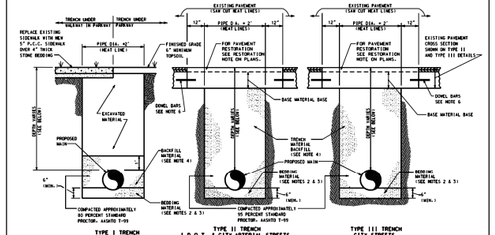

NOTES:

1. PROVIDE PIPE BEDDING TO A DEPTH OF 1/4 OF PIPE DIAMETER OR 6" MINIMUM OF COMPACTED GRANULAR MATERIAL, GRAVEL, OR CRUSHED STONE.
2. USE CA-16 BEDDING MATERIAL FOR PIPE SIZES UP TO 16-INCH DIAMETER.
3. USE CA-11 BEDDING MATERIAL FOR PIPE SIZES LARGER THAN 16-INCH DIAMETER.
4. BACKFILL MUST BE COMPACTED UP TO ONE FOOT ABOVE THE PIPE IN TYPICAL TRENCH TYPE I AND TO THE TOP OF THE TRENCH IN TYPICAL TRENCH TYPE II & III. TRENCH BACKFILL GRADATION CA-15. EXCEPT IN CENTRAL BUSINESS DISTRICT USE FLOWABLE FILL.
5. ALL EXCAVATIONS MUST BE PROPERLY SHORED, SHEETED AND BRACED TO PROVIDE SAFE WORKING CONDITIONS, ALL IN COMPLIANCE WITH THE U.S. DEPARTMENT OF LABOR SAFETY AND HEALTH REGULATIONS FOR CONSTRUCTION AS UNDER THE OCCUPATIONAL SAFETY AND HEALTH ACT, OSHA PART 1926.
6. #5 EPOXY COATED BARS, 18" LONG DRILLED AND GROUTED AT 30" CENTERS- EXCEPT ONLY ON CODY STREETS WHERE CLSM USED AS TRENCH BACKFILL.
7. WHEN TRENCH BACKFILL IS COMPLETE FOUR CONCRETE BASE COURSE FLUSH TO TOP AND AT A MINIMUM THICKNESS OF EXISTING PAVEMENT, THE ADDITIONAL CONCRETE BASE THICKNESS MUST BE PLACED BENEATH THE EXISTING PAVEMENT. CONCRETE BASE THICKNESS MUST BE PER I.D.O.T./I.D.O.T. REQUIREMENTS. WHEN THE THICKNESS OF THE EXISTING ROADWAY BASE MATERIAL IS LESS THAN THE MINIMUM REQUIRED THICKNESS, THE CONTRACTOR SHALL EXCAVATE AND REMOVE THE BOTTOM OF THE BASE MATERIAL OF THE EXISTING PAVEMENT. MINIMUM THICKNESS FOR ARTERIAL STREETS IS 9 INCHES AND 7 INCHES FOR RESIDENTIAL STREET.
8. PLATES ALL PAVEMENTS TO PROVIDE A FINISHED SURFACE WITH NO PONDING, SPALLS AND SLUMPS.
9. CONTRACTOR SHALL PROVIDE BARRIERS IN PAVEMENT AREAS.
* CENTRAL BUSINESS DISTRICT IS DEFINED AS THE AREA FROM DIVISION STREET SOUTH TO RANDOLPH ROAD AND WALTED STREET EAST TO LAKE MICHIGAN.

PIPE DEPTH REQUIREMENTS	
MINIMUM DEPTH OF COVER FOR WATER MAINS	
SIZE OF PIPE	DEPTH OF COVER
12" & 8"	5'-0" & 5'-6"
6"	5'-3" & 5'-9"
4"	5'-6" & 6'-0"
8"	5'-3" & 5'-9"
12"	5'-6" & 6'-0"
16"	4'-9" & 5'-3"
24"	4'-10" & 5'-4"
30" TO 42"	5'-6" MIN.(SEE PLAN)
48" & LARGER	5' MIN.(SEE PLAN)

REV:09.07 WATER MAIN TRENCH DETAILS D-8

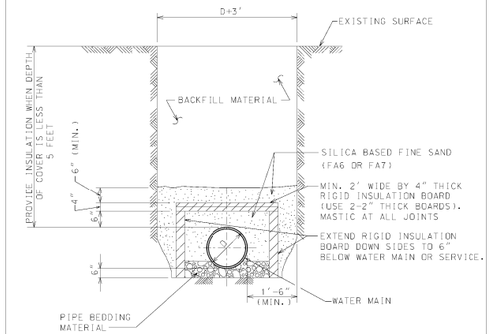

NOTES:

1. RIGID INSULATION BOARD TO BE CLOSED CELL, EXTRUDED POLYSTYRENE FOAM MEETING ASTM 578, TYPE VI, 40 PSI COMPRESSING STRENGTH (ASTM D1621) 0.1% MAX. WATER ABSORPTION (ASTM C272).
2. BACKFILL MATERIAL AROUND RIGID INSULATION BOARD SHALL BE SILICA BASED FINE SAND (FA6 OR FA7), FREE FROM ROOTS, ORGANIC MATTER, LEAVES OR OTHER INJURIOUS MATERIALS.
3. OVERLAP ALL RIGID INSULATION BOARD JOINTS.
4. INSTALL RIGID INSULATION BOARD AS INDICATED ON PLANS OR AS APPROVED BY COMMISSIONER.

REV:08.15 WATER MAIN TRENCH INSULATION DETAIL D-9

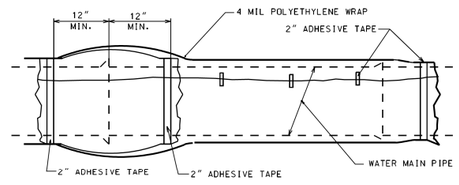

CHART "A" POLYWRAP FLAT TUBE WIDTHS		
PIPE DIAMETER (IN.)	D.I.P. WITH PUSH-ON JOINTS (IN.)	D.I.P. WITH MECHANICAL JOINTS (IN.)
4	14	16
6	17	20
8	21	24
12	29	30
16	37	37
24	53	53

NOTES:

1. USE ONE LENGTH OF POLYETHYLENE TUBE WRAP FOR EACH LENGTH OF PIPE. OVERLAPPED AT PIPE JOINTS AND FOLD EXCESS OVER TOP OF TUBE FOR SLACK REDUCTION.
2. USE CHART "A" TO SELECT SIZE OF WRAP.

REV:04.07 WATER MAIN POLYETHYLENE WRAP DETAIL D-10

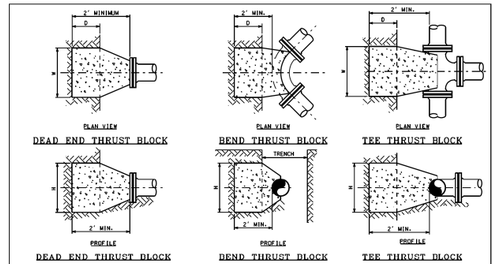

HORIZONTAL THRUST BLOCK DETAILS

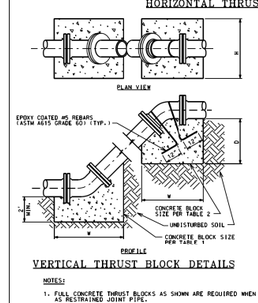

VERTICAL THRUST BLOCK DETAILS

TABLE 1

PIPE SIZE	DEAD END & TEE				HORIZONTAL ¼ BEND				HORIZONTAL ⅛ BEND			
INCH DIA.	D	H	W	CY	D	H	W	CY	D	H	W	CY
16	1	5.5	4.5	2	1	6.5	5	2.5	1	4.5	4	1.5
12	1	3.5	3.5	1	1	4	4	1.5	1	3	3	.75
8	.5	2.5	2.5	.5	.5	3	3	.5	.5	2	2	.3

PIPE SIZE	HORIZONTAL ¼ BEND				HORIZONTAL ⅛ BEND			
INCH DIA.	D	H	W	CY	D	H	W	CY
16	1	3.5	3.5	1	1	2.5	2.5	.6
12	1	2.5	2.5	.5	1	2	2	.4
8	.5	1.5	1.5	.25	.5	1.5	1.5	.25

TABLE 2

PIPE SIZE	VERTICAL ¼ BEND				VERTICAL ¼ BEND BOTTOM			
INCH DIA.	D	H	W	CY	D	H	W	CY
16	7	6	11	3	4.5	4	4	2.25
12	5	6	5	7	2	3	3	1
8	4.5	4	4	3.5	2	2	2	.5

D IS THE DIMENSION INTO UNDISTURBED GROUND IN FEET
H IS HEIGHT OF THRUST BLOCK IN FEET
W IS WIDTH OF THRUST BLOCK IN FEET
ALL DIMENSIONS ARE MINIMUM.
THRUST BLOCKS IN LOOSE FILL OR SAND AREAS ARE NOT INCLUDED IN THESE TABLES AND WILL REQUIRE ADDITIONAL ANALYSIS.

NOTES:

1. FULL CONCRETE THRUST BLOCKS AS SHOWN ARE REQUIRED WHEN THRUST RESTRAIN IS NOT PROVIDED BY OTHER MEANS SUCH AS RESTRAINED JOINT PIPE.
2. WHEN THRUST RESTRAINT GLANDS ARE INSTALLED FOR THE CONNECTIONS, CONCRETE THRUST BLOCKS SHALL BE PROVIDED UP TO THE THE DOTTED LINE AS SHOWN.
3. ALL BOLTS, NUTS, THRUST RESTRAINT GLANDS AND FITTINGS SHALL BE WRAPPED WITH POLYETHYLENE TUBING TO PREVENT CORROSION AND CONCRETE ADHESION.
4. CONCRETE FOR THRUST BLOCKS MUST NOT CONTAIN FLY ASH.

REV:04.07 THRUST RESTRAINT CONCRETE THRUST BLOCK DETAILS D-11

...\E5038-sht-watermain03.dgn
11/29/2017 1:38:03 PM

DESIGN:				
DRAWN:				
CHECKED:				
APPROVED: DF				
DATE: 11/29/2017				
SCALE:				
FILE:	NO.	BY	DATE	DESCRIPTION
	REVISIONS			

KEY PLAN:

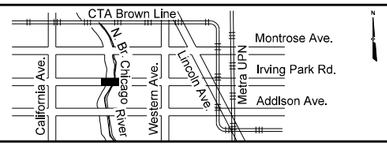

CDOT
CHICAGO DEPARTMENT
OF TRANSPORTATION

BOWMAN, BARRETT
& ASSOCIATES INC.
CONSULTING ENGINEERS
Chicago, Illinois
312.228.0100
www.bbandainc.com

W. IRVING PARK ROAD
AT NORTH BRANCH
CHICAGO RIVER

WATERMAIN DETAILS
STRUCTURE NO. 016-6090

PROJECT NO. E-5-038
DRAWING NO. WM-3
CONTRACT NO. XXXXX

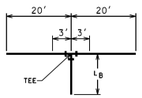

TEE SIZE	L_B
8" x 8" :(8", 12", 16" OR 24") x 12"	0
16" x 16"	42"
16" x 24"	27?"

HORIZONTAL TEES - LENGTH OF RESTRAINED JOINTS

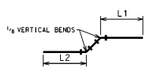

PIPE SIZE	L1	L2
8"	26'	26'
12"	37'	11'
16"	67'	20'
24"	67'	20'

1/8 VERTICAL BENDS - LENGTH OF RESTRAINED JOINTS

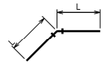

PIPE SIZE	DISTANCE OF RESTRAINED JOINTS REQUIRED EITHER SIDE OF BENDS L				
	BEND SIZES				
	1/32	1/16	1/8	1/4
8"	3'	6'	12'	29'
12"	4'	8'	17'	41'
16"	7'	15'	30'	73'
24"	7'	15'	30'	73'

HORIZONTAL BENDS - LENGTH OF RESTRAINED JOINTS

NOTE:
1. MINIMUM LENGTHS OF PIPE REQUIRED TO RESTRAIN FITTINGS SHOWN.

2. LENGTHS BASED ON POLY-WRAPPED PIPE.

THRUST RESTRAINT
RESTRAINED JOINT PIPE DETAILS D-12

REV:04.07

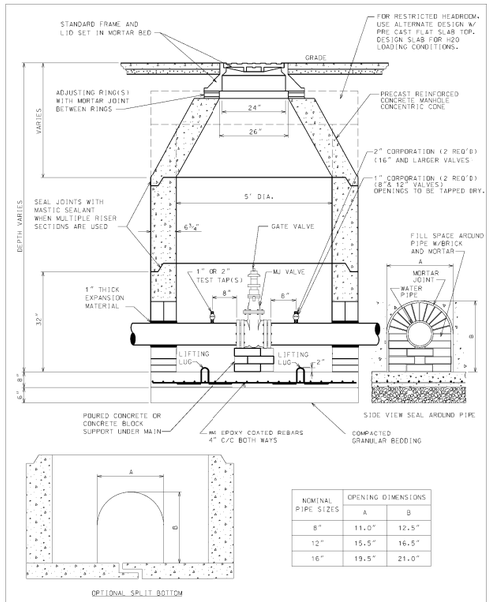

NOMINAL PIPE SIZES	OPENING DIMENSIONS	
	A	B
8"	11.0"	12.5"
12"	15.5"	16.5"
16"	19.5"	21.0"

PRECAST VALVE BASIN
FOR PIPES UP TO 16" DIA. D-13

REV:09.15

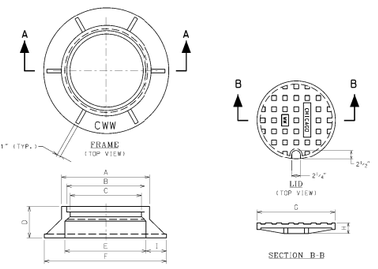

NOTES:

ALL FRAMES AND LIDS SHALL BE OF HEAVY DUTY TYPE DESIGN AND MEET AASHTO M105 AND M306 REQUIREMENTS FOR A 40,000 LB PROOF LOAD.

LETTERING FOR CHICAGO W.W. ON THE LID SHALL BE 2" SHARP FACE GOTHIC LETTERS, 3/16" WIDE AND RAISED 1/4" FROM 5/8 RECESS AS MEASURED FROM THE TOP SURFACE OF THE LID.

LETTERING FOR C.W.W. ON THE FRAME SHALL BE LOCATED ON THE TOP SURFACE O' THE HORIZONTAL FLANGE AND SHALL BE 1" SHARP FACE GOTHIC+ 3/16" WIDE AND RAISED 1/4" AS MEASURED FROM THE FLANGE SURFACE. LOCATION OF LETTERING SHALL BE AS INDICATED ON DRAWING.

	FRAME AND LID DIMENSIONS	
	FRAME AND LID TYPES	
	STANDARD	36" SPECIAL FAL
DIMENSION	INCHES	INCHES
A	24	
B	22 5/8 - 23	36
C	21	34
D	9	8 1/2
E	24 1/2 - 24 13/16	36
F	34	45
G	22 3/4	36
H	3	1 1/2
I	4 3/8 - 4 3/4	4 1/2

FRAME & LID D-15

REV:11.15

GENERAL NOTES

1. Replace the sewer/drain when the invert of the water main is LESS than 18" ABOVE the crown of the sewer/drain.
2. When a water main crosses UNDER a sewer/drain, see detail "Water Mains Crossing Under Sewers & House Drains."
3. When the invert of the water main is MORE than 18" ABOVE the crown of the sewer/drain, no sewer/drain replacement is required.

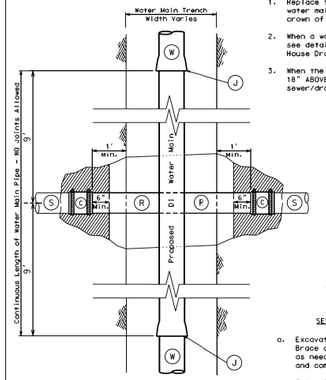

PLAN
No Scale

KEY TO SYMBOLS

- (W) Proposed DI Water Main
- (J) Proposed DI Water Main Joint (Continuous Pipe Between Joints)
- (S) Existing Sewer or House Drain
- (R) Proposed Sewer/Drain Replacement
- (C) Proposed ASTM C1173 Flexible Transition Coupling for Sewer Piping
- Proposed Bentonite Seal
- Undisturbed Soil

SEWER/DRAIN REPLACEMENT NOTES

a. Excavate as needed to replace sewer/drain. Brace and shore trenches and excavations as needed to provide safe working conditions and comply with applicable requirements.

b. Cut existing sewer/drain to remove section to be replaced; breaking or cracking is not allowed.

c. Replace the sewer/drain with a continuous length of ductile iron pipe, the same size as the sewer/drain, cut to fit. Reconnect the sewer/drain with ASTM C1173 Flexible Transition Couplings for Sewer Pipe.

d. Encase the couplings in medium bentonite chips (1/4" - 3/8") mixed with enough clean water to form a stiff clay. Pack the excavations surrounding the couplings to seal off leaks.

e. Center a length of water main pipe (18' typically) over the sewer/drain crossing.

f. Except where bentonite seals are shown, backfill using typical standards.

g. Comply with IL EPA requirements (modified and approved by IL EPA November 13, 2007).

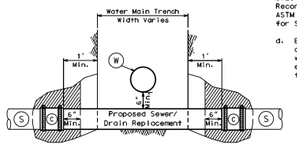

PROFILE THROUGH SEWER/DRAIN
No Scale

WATER MAINS CROSSING OVER
SEWERS & HOUSE DRAINS D-19
SHT. 1 OF 2

Rev:11.07

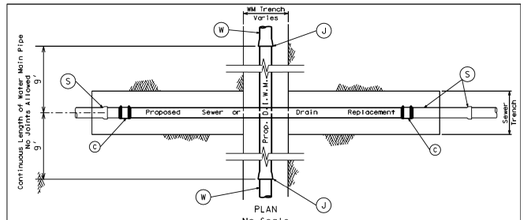

PLAN
No Scale

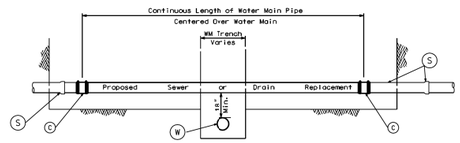

PROFILE THROUGH SEWER/DRAIN
No Scale

GENERAL NOTES

1. Replace the sewer/drain in all cases when a water main crosses UNDER the sewer/drain.
2. When a water main crosses OVER a sewer/drain, see detail "Water Mains Crossing Over Sewers & House Drains."

KEY TO SYMBOLS

- (W) Proposed DI Water Main
- (J) Proposed DI Water Main Joint (Continuous Pipe Between Joints)
- (S) Existing Sewer or House Drain
- (R) Proposed Sewer/Drain Replacement
- (C) Proposed ASTM C1173 Flexible Transition Coupling for Sewer Piping
- Undisturbed Soil

SEWER/DRAIN REPLACEMENT NOTES

a. Minimum clearance between the crown of the water main and the invert of the sewer/drain is 18".

b. Excavate as needed to replace sewer/drain. Brace and shore trenches and excavations as needed to provide safe working conditions and comply with applicable requirements.

c. Cut existing sewer/drain to remove section to be replaced; breaking or cracking is not allowed.

d. Replace the sewer/drain with a continuous length of ductile iron pipe, the same size as the sewer/drain, cut to fit. Reconnect the sewer/drain with ASTM C1173 Flexible Transition Couplings for Sewer Pipe.

e. Center a length of water main pipe (18' typically) under the sewer/drain crossing.

f. Backfill using typical standards.

g. Comply with IL EPA requirements.

WATER MAINS CROSSING UNDER
SEWERS & HOUSE DRAINS D-19
SHT. 2 OF 2

REV:11.07

DESIGN:				
DRAWN:				
CHECKED:				
APPROVED: DF				
DATE: 11/29/2017				
SCALE:				
FILE:	NO.	BY	DATE	DESCRIPTION
	REVISIONS			

KEY PLAN:

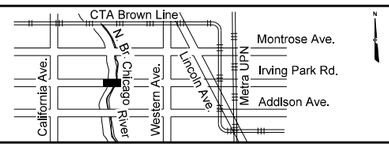

CDOT
CHICAGO DEPARTMENT OF TRANSPORTATION

BOWMAN, BARRETT & ASSOCIATES INC.
CONSULTING ENGINEERS
Chicago, Illinois
312.228.0100
www.bbandainc.com

W. IRVING PARK ROAD AT NORTH BRANCH CHICAGO RIVER

WATERMAIN DETAILS
STRUCTURE NO. 016-6090

PROJECT NO. E-5-038

DRAWING NO. WM-4

CONTRACT NO. XXXXX

11/29/2017 1:38:39 PM ...\E5038-sht-watermain04.dgn

TOTAL SHEETS	SHEET NO.
184	52

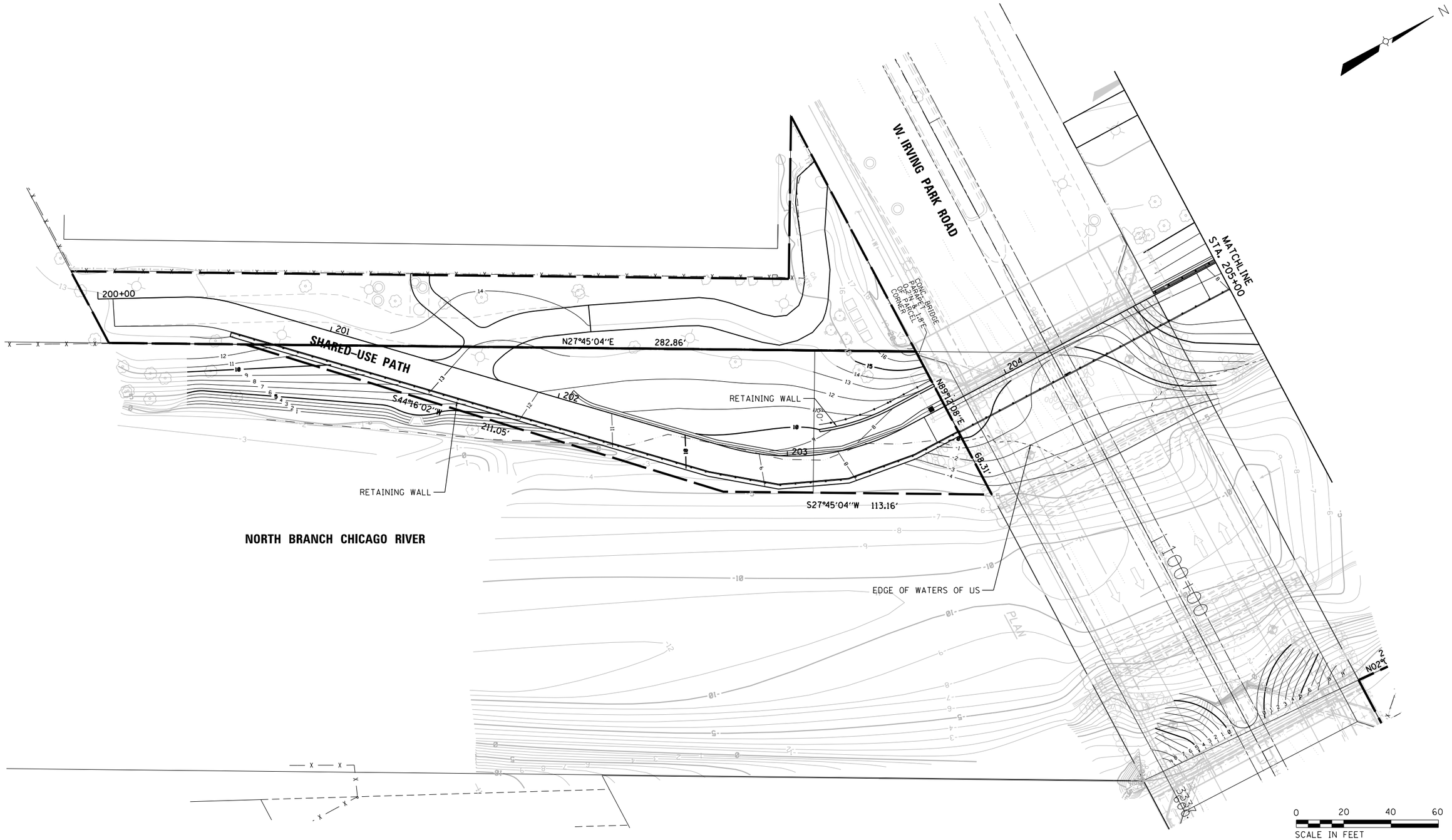

...\Cadd Sheets\E5038-sht-gr1

1/30/2018 3:14:58 PM

DESIGN: BJD					
DRAWN: BJD					
CHECKED: SA					
APPROVED:					
DATE: 11/29/2017					
SCALE: 1" = 20'					
FILE:	NO.	BY	DATE	DESCRIPTION	
	REVISIONS				

KEY PLAN:

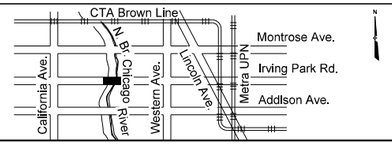

CDOT
CHICAGO DEPARTMENT OF TRANSPORTATION

EJM ENGINEERING, INC.
411 South Wells Street Suite 1000
Chicago, Illinois 60607

W. IRVING PARK ROAD AT NORTH BRANCH CHICAGO RIVER

GRADING PLAN
SHARED-USE PATH

STATION 203+75 TO STATION 207+95

PROJECT NO. E-5-038

DRAWING NO. GRD-1

CONTRACT NO. XXXXX

TOTAL SHEETS	SHEET NO.
184	53

HORNER PARK

N

EXISTING PATH

SHARED-USE PATH

RETAINING WALL

EDGE OF WATERS OF US

MATCHLINE
STA. 204+25

205+00

206

207

208

SANITARY DISTRICT NORTH SHORE CHANNEL

ELEVATION

25.03'
N02°07'49"E

0 20 40 60
SCALE IN FEET

...\Cadd Sheets\E5038-sht-gr2
1/30/2018 3:15:00 PM

DESIGN: BJD				
DRAWN: BJD				
CHECKED: SA				
APPROVED:				
DATE: 11/29/2017				
SCALE: 1" = 20'				
FILE:	NO.	BY	DATE	DESCRIPTION
	REVISIONS			

KEY PLAN:

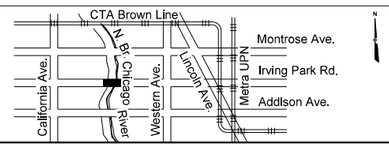

CDOT
CHICAGO DEPARTMENT OF TRANSPORTATION

EJM ENGINEERING, INC.
411 South Wells Street Suite 1000
Chicago, Illinois 60607

W. IRVING PARK ROAD AT NORTH BRANCH CHICAGO RIVER

GRADING PLAN
SHARED-USE PATH

STATION 204+25 TO STATION 208+50

PROJECT NO. E-5-038

DRAWING NO. GRD-2

CONTRACT NO. XXXXX

TOTAL SHEETS	SHEET NO.
184	54

EARTHWORK - SOUTH OF IRVING PARK ROAD BRIDGE

		TOPSOIL REMOVAL -A-	TOPSOIL PLACEMENT -B-	CUT -C-	FILL -D-
From Sta.	To Sta.	VOLUME CU. YD.	VOLUME CU. YD.	VOLUME CU. YD.	VOLUME CU. YD.
200+00.00	200+25.00	6.7	0.7	0.2	0.9
200+25.00	200+50.00	14.7	2.4	0.2	3.9
200+50.00	200+75.00	21.8	6.5	3.6	7.1
200+75.00	201+00.00	27.2	9.6	6.9	8.7
201+00.00	201+25.00	25.9	8.9	3.4	20.7
201+25.00	201+50.00	34.9	13.3	3.6	42.1
201+50.00	201+75.00	44.1	16.5	9.0	73.6
201+75.00	202+00.00	44.6	16.4	5.6	111.2
202+00.00	202+25.00	37.8	14.2	3.1	160.6
202+25.00	202+50.00	34.7	13.4	5.7	238.1
202+50.00	202+75.00	42.7	18.9	5.5	305.3
202+75.00	203+00.00	46.6	21.6	5.5	329.5
203+00.00	203+25.00	45.6	20.6	8.8	312.9
203+25.00	203+50.00	50.0	23.2	7.2	230.7
203+50.00	203+65.00	33.1	15.8	4.8	68.6
203+65.00	203+70.76	14.0	6.8	4.3	14.7

EARTHWORK - NORTH OF AND INCLUDING IRVING PARK ROAD BRIDGE

		TOPSOIL REMOVAL -A-	TOPSOIL PLACEMENT -B-	CUT -C-	FILL -D-
From Sta.	To Sta.	VOLUME CU. YD.	VOLUME CU. YD.	VOLUME CU. YD.	VOLUME CU. YD.
203+70.76	203+75.00	5.7	0.0	9.9	5.5
203+75.00	204+00.00	0.0	0.0	100.8	0.0
204+00.00	204+25.00	0.0	0.0	140.7	0.0
204+25.00	204+50.00	0.0	0.0	196.2	0.0
204+50.00	204+70.76	23.1	22.6	177.5	6.8
204+70.76	204+75.00	9.8	4.9	39.4	1.4
204+75.00	205+00.00	58.7	29.2	294.4	0.6
205+00.00	205+25.00	56.3	27.7	309.8	0.3
205+25.00	205+50.00	56.7	27.9	259.3	0.4
205+50.00	205+75.00	55.5	27.1	203.7	0.5
205+75.00	205+80.00	10.0	4.7	33.7	0.1
205+80.00	206+00.00	37.2	16.9	115.1	0.3
206+00.00	206+25.00	52.2	23.8	121.1	6.5
206+25.00	206+50.00	49.2	22.2	105.1	6.4
206+50.00	206+75.00	40.6	18.1	92.4	0.4
206+75.00	207+00.00	47.2	22.4	94.9	0.5
207+00.00	207+25.00	55.7	28.2	80.0	0.6
207+25.00	207+50.00	39.3	17.3	39.9	0.4
207+50.00	207+75.00	29.7	2.9	15.8	5.0
207+75.00	208+00.00	28.0	1.6	10.0	5.1
208+00.00	208+25.00	16.4	2.5	6.7	0.3
208+25.00	208+50.00	8.0	1.4	14.9	0.1

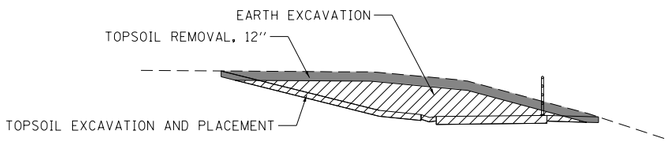

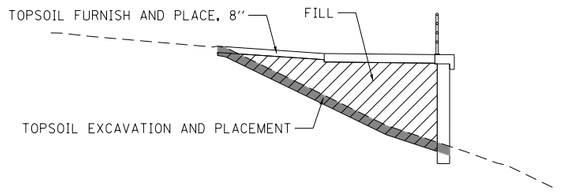

...\E5038-sht-earthwork.dgn
11/29/2017 1:39:03 PM

DESIGN: BJD				
DRAWN: BJD				
CHECKED: SA				
APPROVED:				
DATE: 11/29/2017				
SCALE: NTS				
FILE:	NO.	BY	DATE	DESCRIPTION
	REVISIONS			

KEY PLAN:

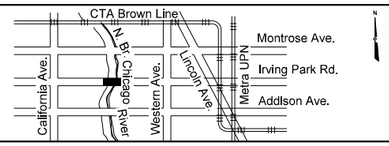

CDOT
CHICAGO DEPARTMENT OF TRANSPORTATION

EJM ENGINEERING, INC.
411 South Wells Street Suite 1000
Chicago, Illinois 60607

W. IRVING PARK ROAD AT NORTH BRANCH CHICAGO RIVER

EARTHWORK TABLES

PROJECT NO. E-5-038

DRAWING NO. EW–1

CONTRACT NO. XXXXX

TOTAL SHEETS	SHEET NO.
184	55

EX. WROUGHT IRON FENCE

MWRD ROW

PR EASEMENT

0.5%

1:6

TOPSOIL EXCAVATION = 17.3 SQ FT
TOPSOIL PLACEMENT = 3,501 SQ FT
FILL = 6.5 SQ FT
CUT = 0 SQ FT

200 + 50.00

EX. WROUGHT IRON FENCE

MWRD ROW

PR EASEMENT

0.25%

1:5

TOPSOIL EXCAVATION = 14.4 SQ FT
TOPSOIL PLACEMENT = 1,602 SQ FT
FILL = 1.9 SQ FT
CUT = 0.4 SQ FT

200 + 25.00

MWRD ROW

TOPSOIL EXCAVATION = 0 SQ FT
TOPSOIL PLACEMENT = 0 SQ FT
FILL = 0 SQ FT
CUT = 0 SQ FT

200 + 00.00

DESIGN: BJD				
DRAWN: BJD				
CHECKED: SA				
APPROVED:				
DATE: 11/29/2017				
SCALE: H: 1"=10' V: 1"=5'				
FILE:	NO.	BY	DATE	DESCRIPTION
	REVISIONS			

KEY PLAN:

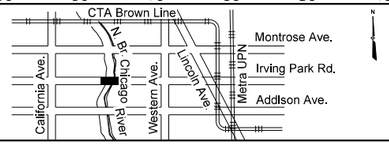

CDOT
CHICAGO DEPARTMENT OF TRANSPORTATION

EJM ENGINEERING, INC.
411 South Wells Street Suite 1000
Chicago, Illinois 60607

W. IRVING PARK ROAD AT NORTH BRANCH CHICAGO RIVER

PATH CROSS SECTIONS

STA. 200 + 00.00 TO STA. 200 + 50.00

PROJECT NO. E-5-038

DRAWING NO. XSC-1

CONTRACT NO. XXXXX

TOTAL SHEETS	SHEET NO.
184	56

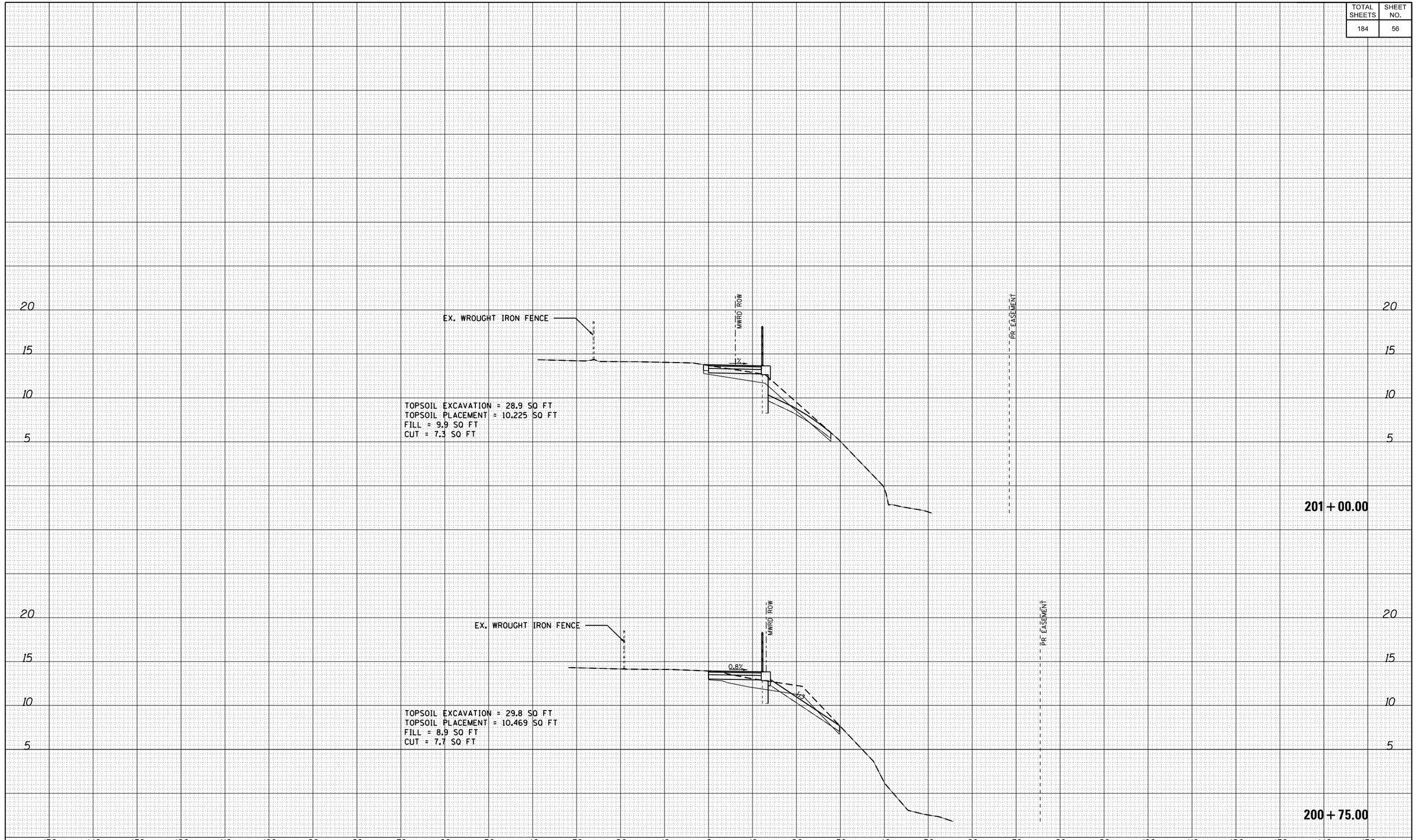

DESIGN:	BJD			
DRAWN:	BJD			
CHECKED:	SA			
APPROVED:				
DATE:	11/29/2017			
SCALE:	H: 1"=10' V: 1"=5'			
FILE:				

NO.	BY	DATE	DESCRIPTION
REVISIONS			

KEY PLAN:

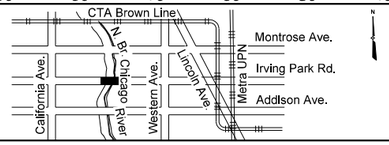

CDOT
CHICAGO DEPARTMENT OF TRANSPORTATION

EJM ENGINEERING, INC.
411 South Wells Street Suite 1000
Chicago, Illinois 60607

W. IRVING PARK ROAD AT NORTH BRANCH CHICAGO RIVER

PATH CROSS SECTIONS

STA. 200 + 75.00 TO STA. 201 + 00.00

PROJECT NO. E-5-038

DRAWING NO. XSC-2

CONTRACT NO. XXXXX

TOTAL SHEETS	SHEET NO.
184	57

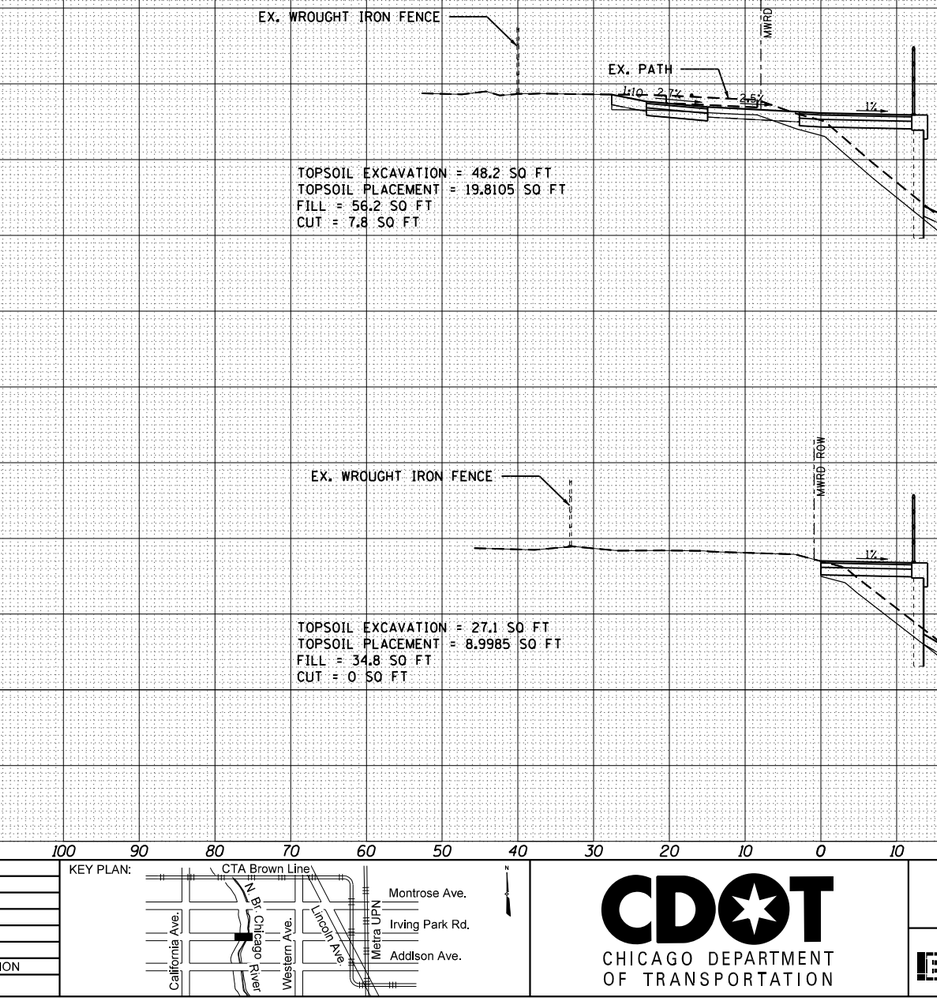

DESIGN:	BJD			
DRAWN:	BJD			
CHECKED:	SA			
APPROVED:				
DATE:	11/29/2017			
SCALE:	H: 1"=10' V: 1"=5'			
FILE:	NO.	BY	DATE	DESCRIPTION
	REVISIONS			

KEY PLAN:

CDOT
CHICAGO DEPARTMENT OF TRANSPORTATION

EJM ENGINEERING, INC.
411 South Wells Street Suite 1000
Chicago, Illinois 60607

W. IRVING PARK ROAD AT NORTH BRANCH CHICAGO RIVER

PATH CROSS SECTIONS

STA. 201+25.00 TO STA. 201+50.00

PROJECT NO. E-5-038

DRAWING NO. XSC-3

CONTRACT NO. XXXXX

TOTAL SHEETS	SHEET NO.
184	58

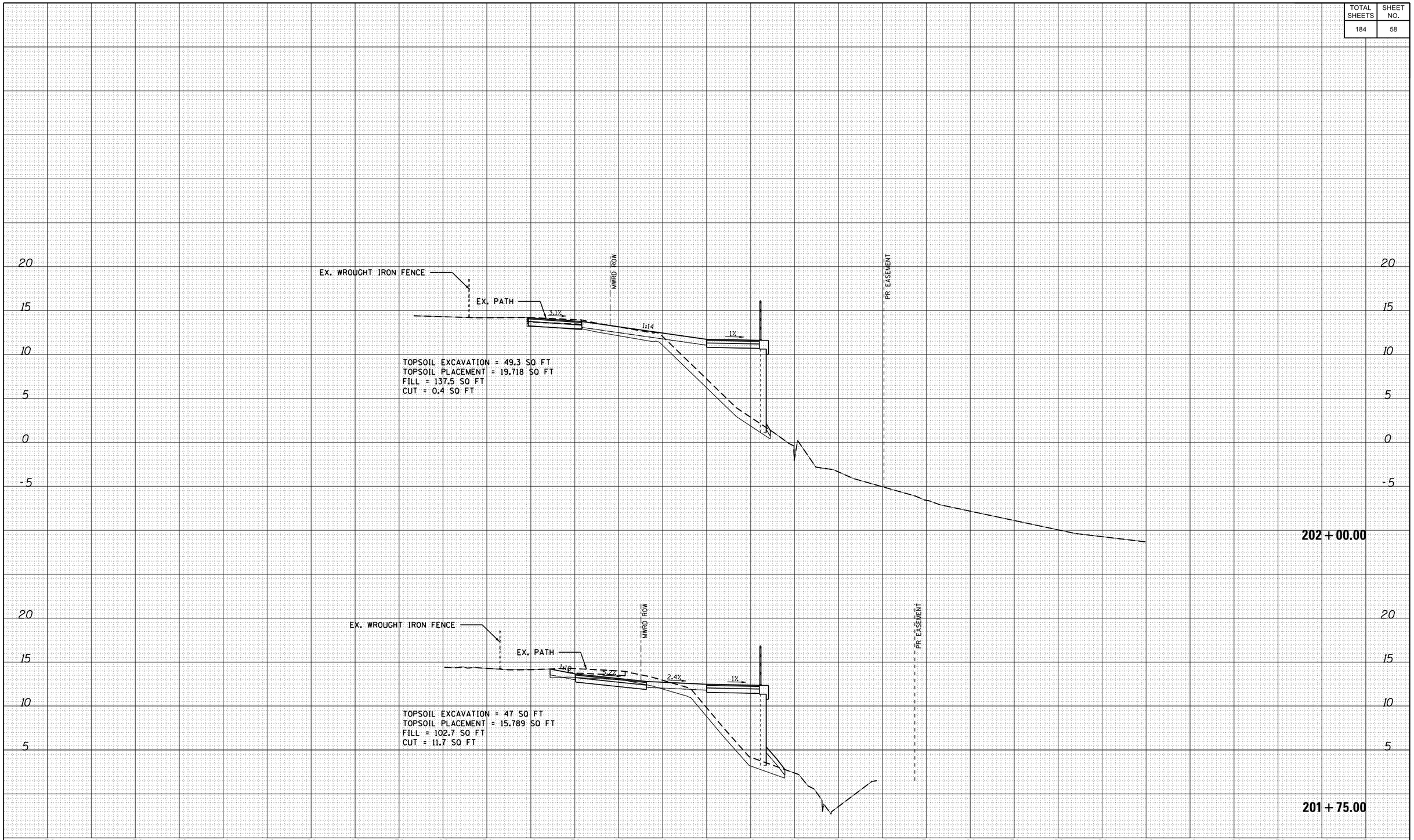

DESIGN: BJD				
DRAWN: BJD				
CHECKED: SA				
APPROVED:				
DATE: 11/29/2017				
SCALE: H: 1"=10' V: 1"=5'				
FILE:	NO.	BY	DATE	DESCRIPTION
	REVISIONS			

KEY PLAN:

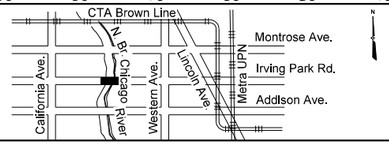

CDOT
CHICAGO DEPARTMENT OF TRANSPORTATION

EJM ENGINEERING, INC.
411 South Wells Street Suite 1000
Chicago, Illinois 60607

W. IRVING PARK ROAD AT NORTH BRANCH CHICAGO RIVER

PATH CROSS SECTIONS

STA. 201+75.00 TO STA. 202+00.00

PROJECT NO.
E-5-038
DRAWING NO.
XSC-4
CONTRACT NO. XXXXX

TOTAL SHEETS	SHEET NO.
184	59

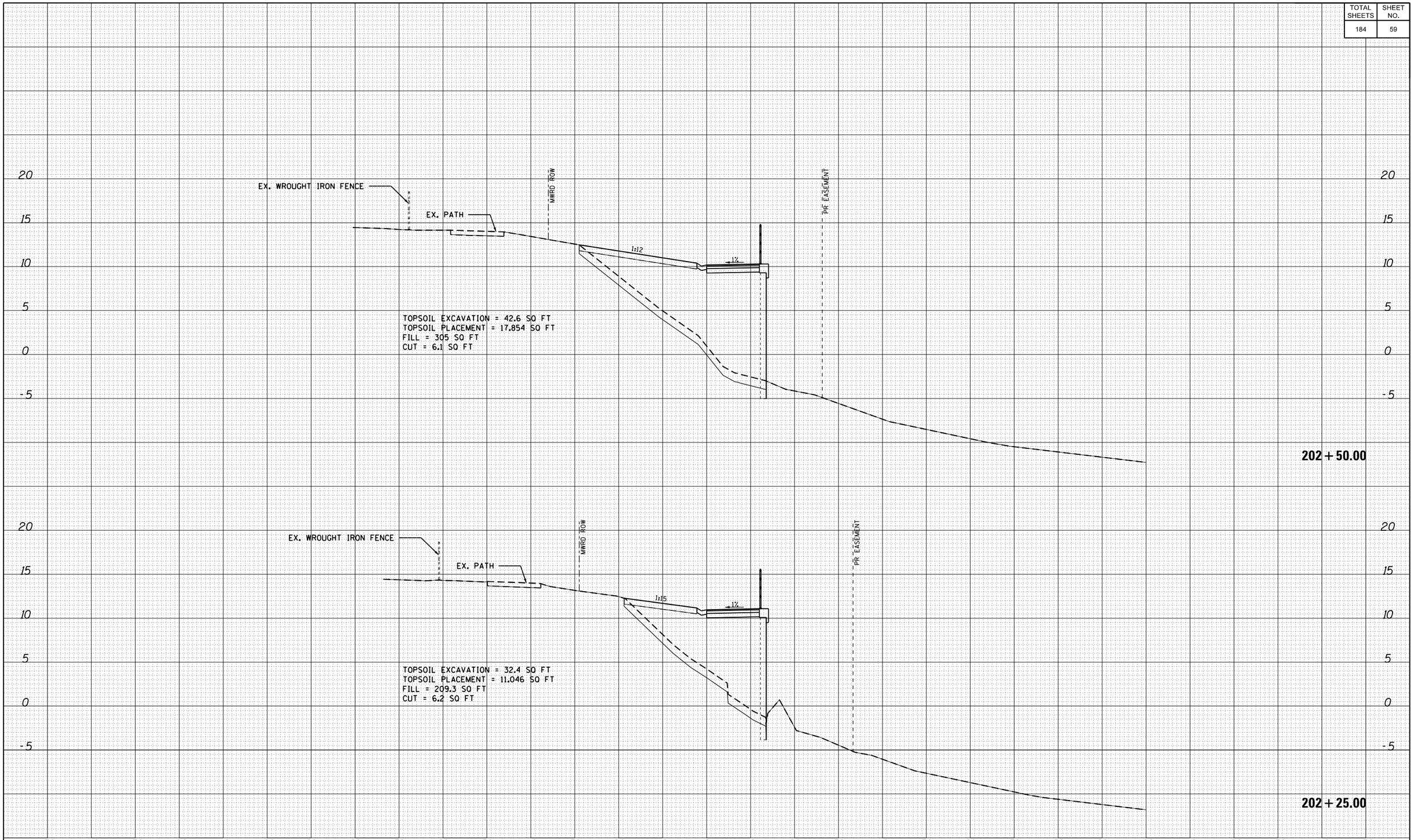

DESIGN:	BJD			
DRAWN:	BJD			
CHECKED:	SA			
APPROVED:				
DATE:	11/29/2017			
SCALE:	H: 1"=10' V: 1"=5'			
FILE:		NO.	BY	DATE
		REVISIONS		

KEY PLAN:

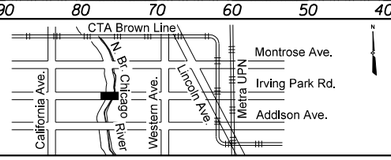

CDOT
CHICAGO DEPARTMENT OF TRANSPORTATION

EJM ENGINEERING, INC.
411 South Wells Street Suite 1000
Chicago, Illinois 60607

W. IRVING PARK ROAD AT NORTH BRANCH CHICAGO RIVER

PATH CROSS SECTIONS

STA. 202+25.00 TO STA. 202+50.00

PROJECT NO. E-5-038

DRAWING NO. XSC-5

CONTRACT NO. XXXXX

TOTAL SHEETS	SHEET NO.
184	60

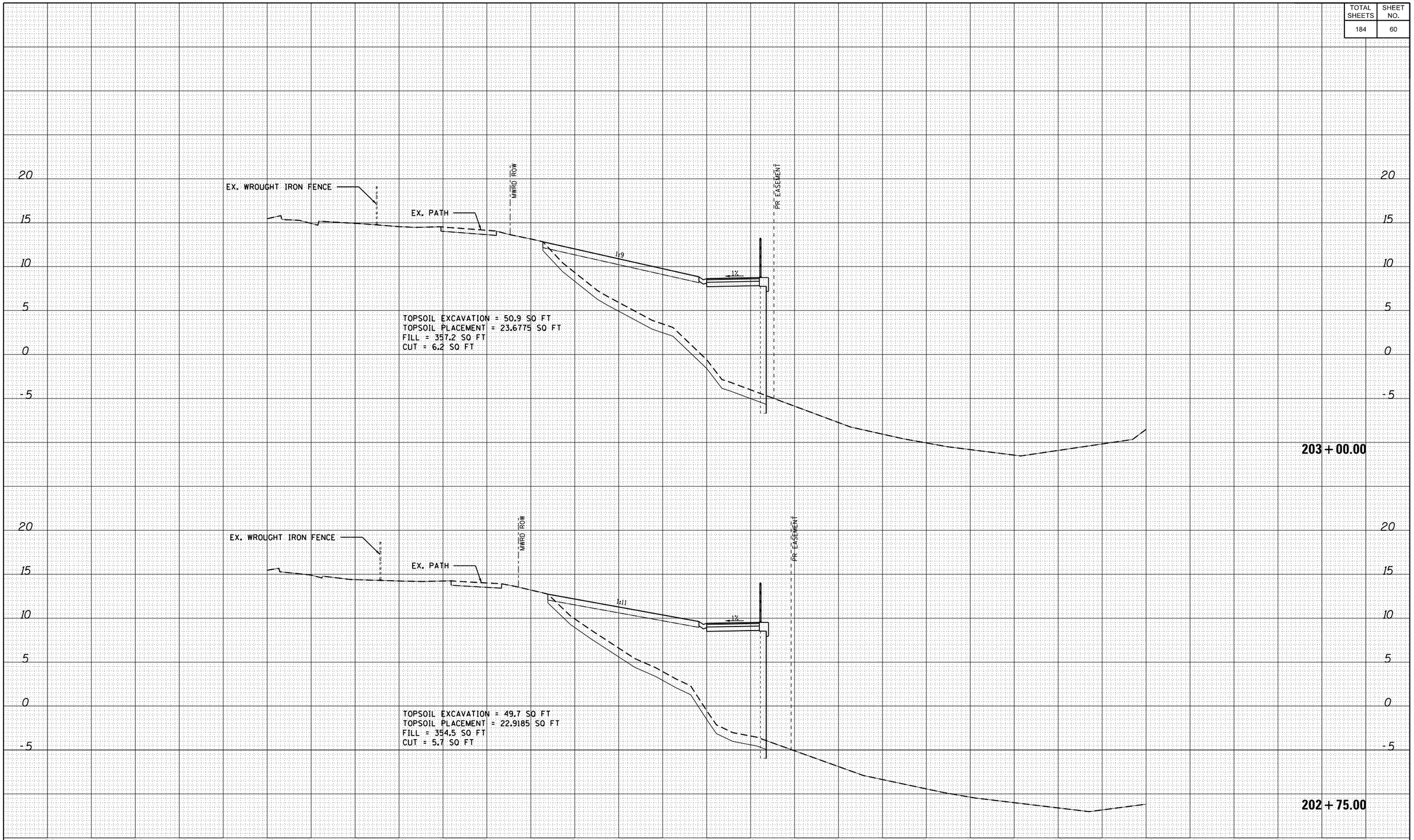

DESIGN: BJD				
DRAWN: BJD				
CHECKED: SA				
APPROVED:				
DATE: 11/29/2017				
SCALE: H: 1"=10' V: 1"=5'				
FILE:	NO.	BY	DATE	DESCRIPTION
	REVISIONS			

KEY PLAN:

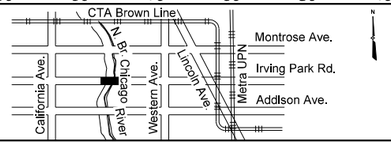

CDOT
CHICAGO DEPARTMENT OF TRANSPORTATION

EJM ENGINEERING, INC.
411 South Wells Street Suite 1000
Chicago, Illinois 60607

W. IRVING PARK ROAD AT NORTH BRANCH CHICAGO RIVER

PATH CROSS SECTIONS

STA. 202 + 75.00 TO STA. 203 + 00.00

PROJECT NO. E-5-038

DRAWING NO. XSC-6

CONTRACT NO. XXXXX

TOTAL SHEETS	SHEET NO.
184	61

150 140 130 120 110 100 90 80 70 60 50 40 30 20 10 0 10 20 30 40 50 60 70 80 90 100 110 120 130 140 150

20 15 10 5 0 -5

MWRD ROW

PR. EASEMENT

1:5

4%

1%

TOPSOIL EXCAVATION = 60.4 SQ FT
TOPSOIL PLACEMENT = 29.4005 SQ FT
FILL = 179.8 SQ FT
CUT = 2.8 SQ FT

203 + 50.00

EX. WROUGHT IRON FENCE

EX. PATH

MWRD ROW

PR. EASEMENT

1:8

4%

1%

TOPSOIL EXCAVATION = 47.5 SQ FT
TOPSOIL PLACEMENT = 20.758 SQ FT
FILL = 318.6 SQ FT
CUT = 12.7 SQ FT

203 + 25.00

150 140 130 120 110 100 90 80 70 60 50 40 30 20 10 0 10 20 30 40 50 60 70 80 90 100 110 120 130 140 150

DESIGN: BJD				
DRAWN: BJD				
CHECKED: SA				
APPROVED:				
DATE: 11/29/2017				
SCALE: H: 1"=10' V: 1"=5'				
FILE:	NO.	BY	DATE	DESCRIPTION
	REVISIONS			

KEY PLAN:

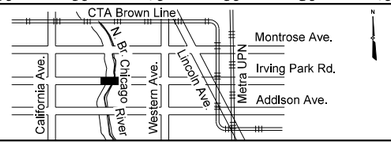

CDOT
CHICAGO DEPARTMENT OF TRANSPORTATION

EJM ENGINEERING, INC.
411 South Wells Street Suite 1000
Chicago, Illinois 60607

W. IRVING PARK ROAD AT NORTH BRANCH CHICAGO RIVER

PATH CROSS SECTIONS

STA. 203 + 25.00 TO STA. 203 + 50.00

PROJECT NO. E-5-038

DRAWING NO. XSC-7

CONTRACT NO. XXXXX

TOTAL SHEETS	SHEET NO.
184	62

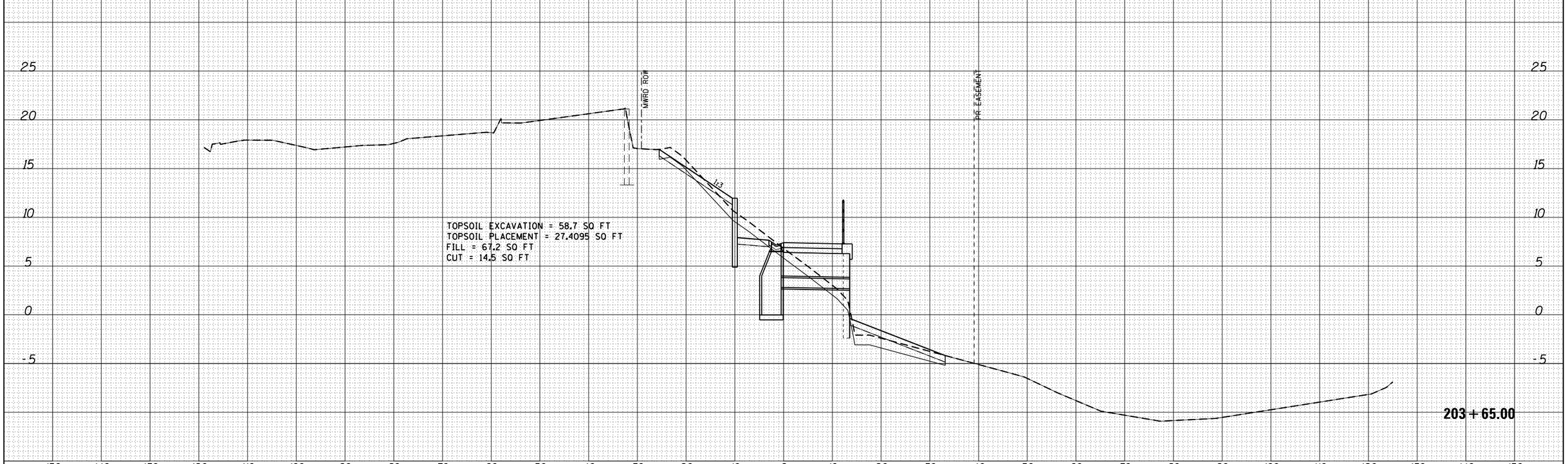

DESIGN:	BJD			
DRAWN:	BJD			
CHECKED:	SA			
APPROVED:				
DATE:	11/29/2017			
SCALE:	H: 1"=10' V: 1"=5'			
FILE:	NO.	BY	DATE	DESCRIPTION
	REVISIONS			

KEY PLAN:

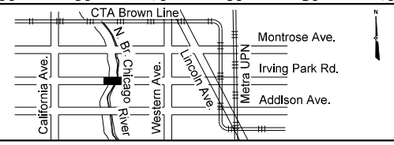

CDOT
CHICAGO DEPARTMENT OF TRANSPORTATION

EJM ENGINEERING, INC.
411 South Wells Street Suite 1000
Chicago, Illinois 60607

W. IRVING PARK ROAD AT NORTH BRANCH CHICAGO RIVER

PATH CROSS SECTIONS

STA. 203 + 65.00 TO STA. 203 + 65.00

PROJECT NO.	E-5-038
DRAWING NO.	XSC-8
CONTRACT NO.	XXXXX

TOTAL SHEETS	SHEET NO.
184	63

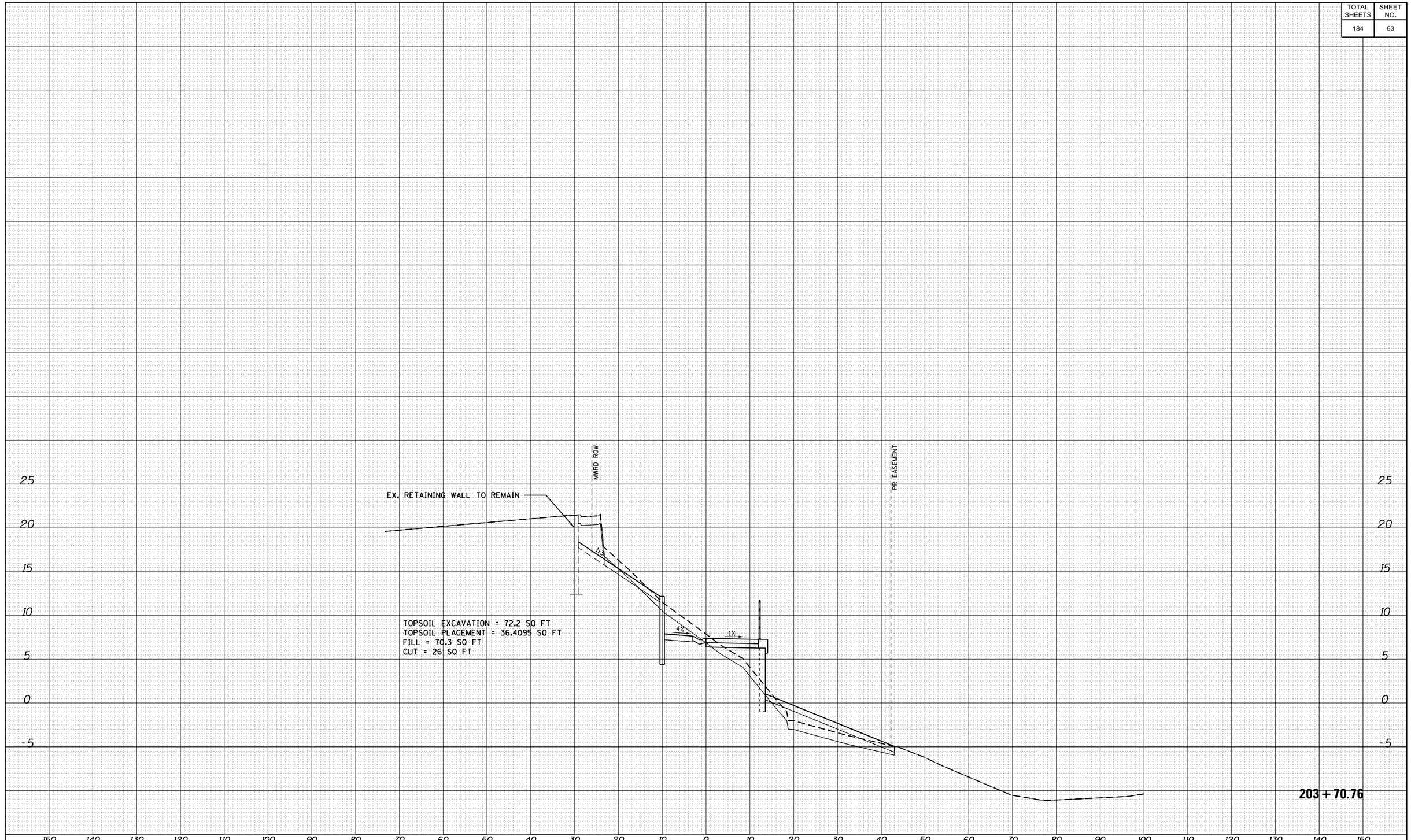

DESIGN:	BJD			
DRAWN:	BJD			
CHECKED:	SA			
APPROVED:				
DATE:	11/29/2017			
SCALE:	H: 1"=10' V: 1"=5'			
FILE:		NO.	BY	DATE
		REVISIONS		

KEY PLAN:

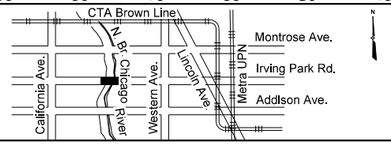

CDOT
CHICAGO DEPARTMENT OF TRANSPORTATION

EJM ENGINEERING, INC.
411 South Wells Street Suite 1000
Chicago, Illinois 60607

W. IRVING PARK ROAD AT NORTH BRANCH CHICAGO RIVER

PATH CROSS SECTIONS

STA. 203+70.76 TO STA. 203+70.76

PROJECT NO. E-5-038

DRAWING NO. XSC-9

CONTRACT NO. XXXXX

TOTAL SHEETS	SHEET NO.
184	64

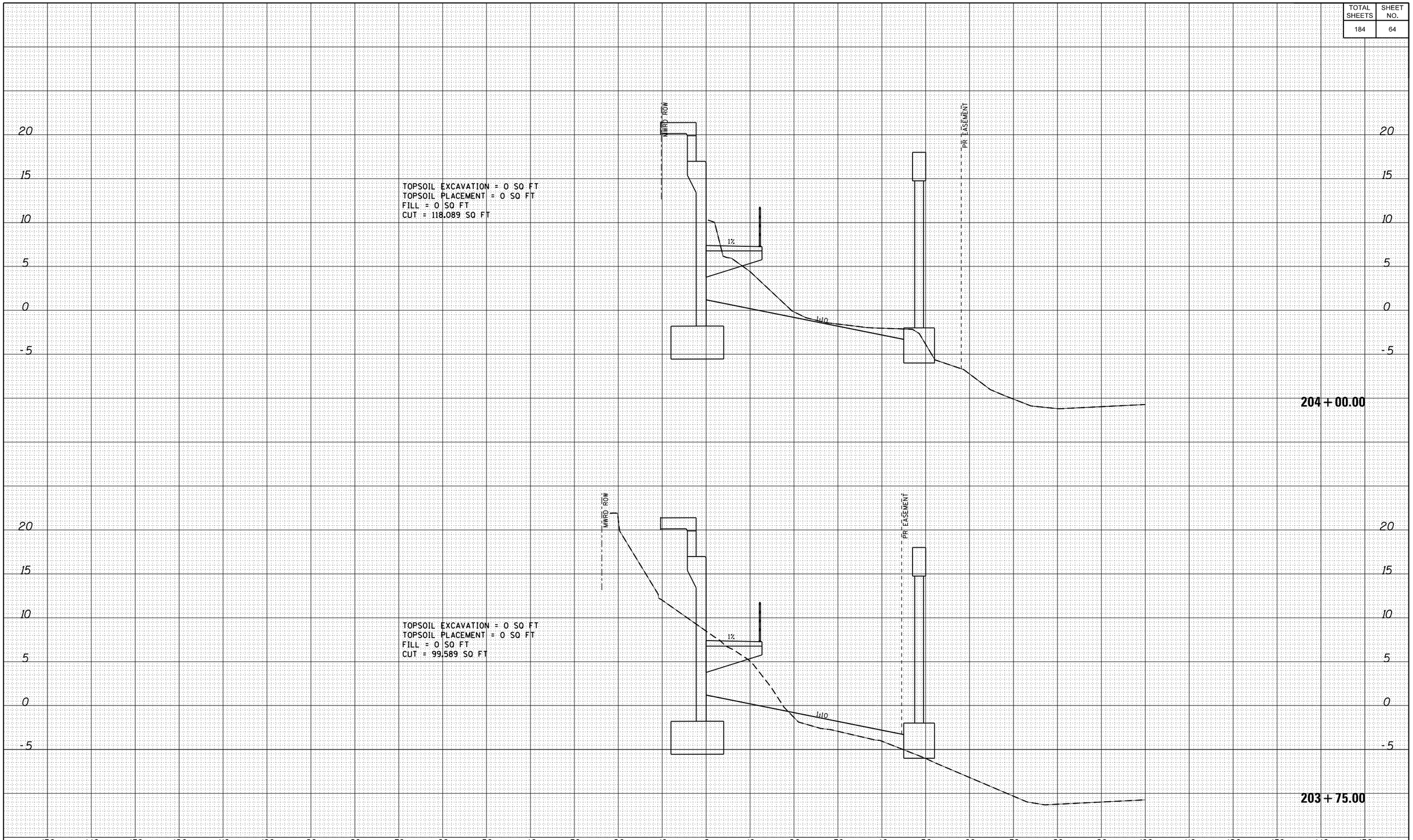

DESIGN:	BJD			
DRAWN:	BJD			
CHECKED:	SA			
APPROVED:				
DATE:	11/29/2017			
SCALE:	H: 1"=10' V: 1"=5'			
FILE:	NO.	BY	DATE	DESCRIPTION
	REVISIONS			

KEY PLAN:

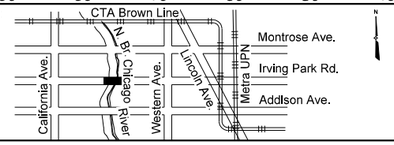

CDOT
CHICAGO DEPARTMENT OF TRANSPORTATION

EJM ENGINEERING, INC.
411 South Wells Street Suite 1000
Chicago, Illinois 60607

W. IRVING PARK ROAD AT NORTH BRANCH CHICAGO RIVER

PATH CROSS SECTIONS

STA. 203+75.00 TO STA. 204+00.00

PROJECT NO. E-5-038

DRAWING NO. XSC–10

CONTRACT NO. XXXXX

TOTAL SHEETS	SHEET NO.
184	65

TOPSOIL EXCAVATION = 0 SQ FT
TOPSOIL PLACEMENT = 0 SQ FT
FILL = 0 SQ FT
CUT = 237.886 SQ FT

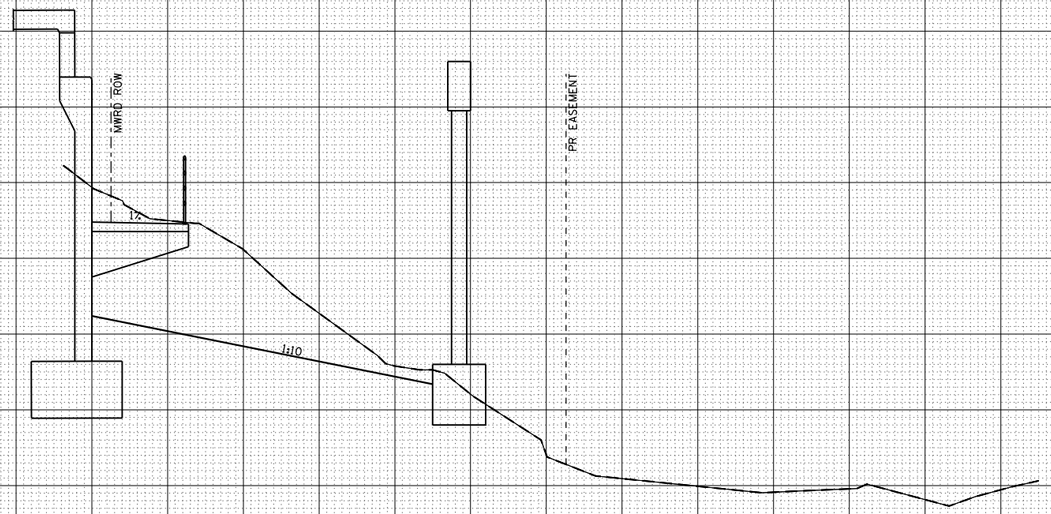

204 + 50.00

TOPSOIL EXCAVATION = 0 SQ FT
TOPSOIL PLACEMENT = 0 SQ FT
FILL = 0 SQ FT
CUT = 185.8 SQ FT

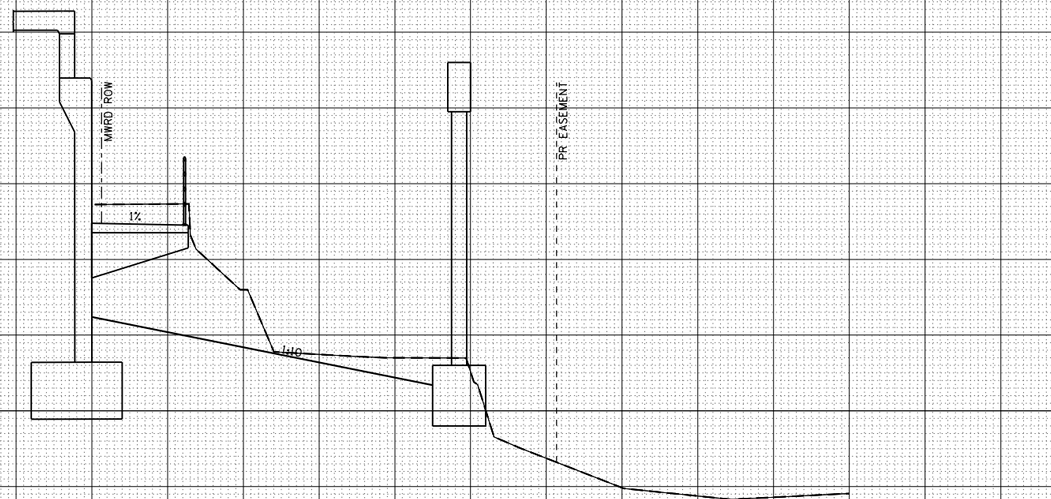

204 + 25.00

DESIGN: BJD				
DRAWN: BJD				
CHECKED: SA				
APPROVED:				
DATE: 11/29/2017				
SCALE: H: 1"=10' V: 1"=5'				
FILE:	NO.	BY	DATE	DESCRIPTION
	REVISIONS			

KEY PLAN:

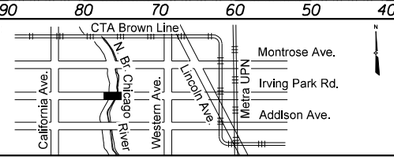

CDOT
CHICAGO DEPARTMENT OF TRANSPORTATION

EJM ENGINEERING, INC.
411 South Wells Street Suite 1000
Chicago, Illinois 60607

W. IRVING PARK ROAD AT NORTH BRANCH CHICAGO RIVER

PATH CROSS SECTIONS

STA. 204 + 25.00 TO STA. 204 + 50.00

PROJECT NO. E-5-038

DRAWING NO. XSC–11

CONTRACT NO. XXXXX

TOTAL SHEETS	SHEET NO.
184	66

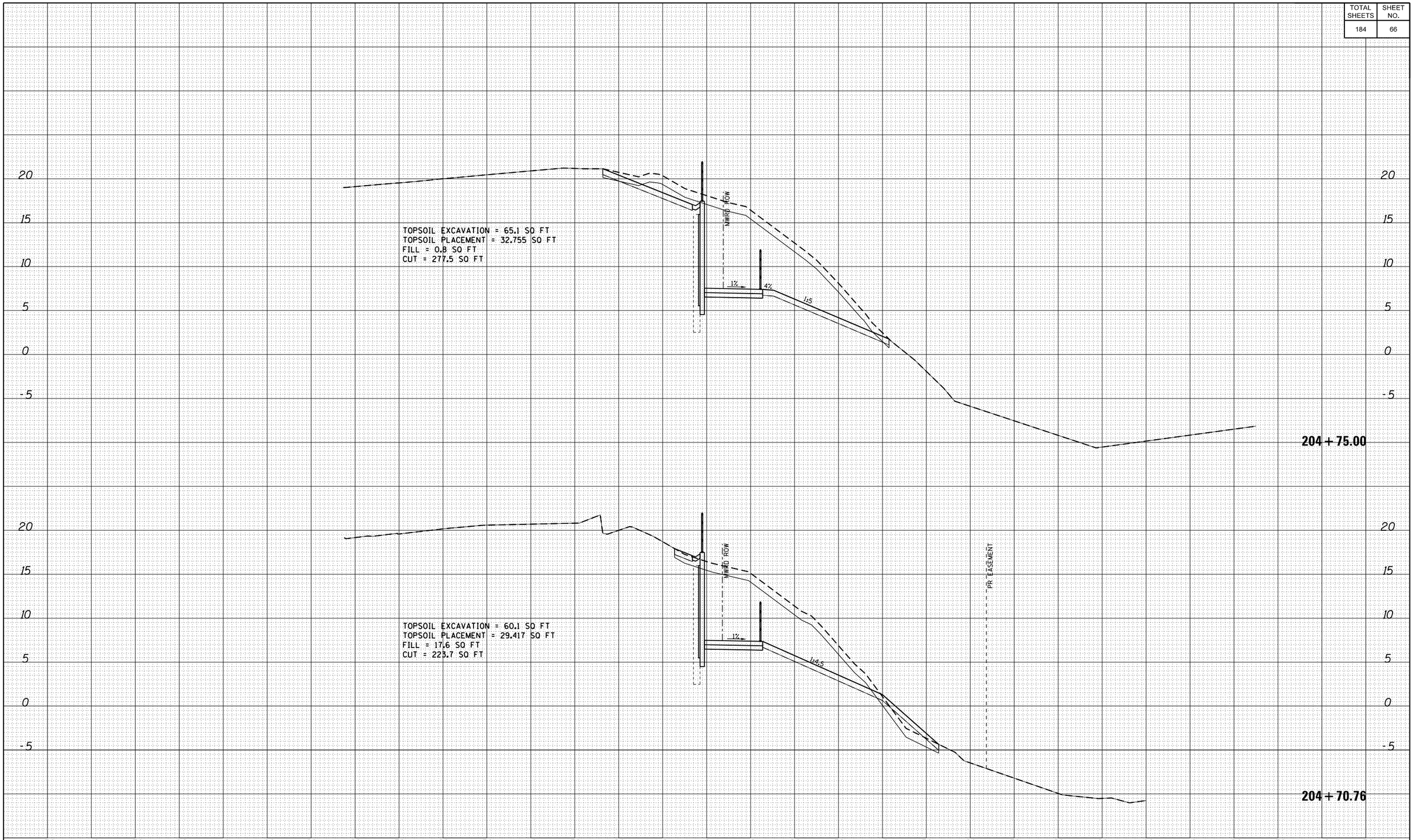

DESIGN: BJD				
DRAWN: BJD				
CHECKED: SA				
APPROVED:				
DATE: 11/29/2017				
SCALE: H: 1"=10' V: 1"=5'				
FILE:	NO.	BY	DATE	DESCRIPTION
	REVISIONS			

KEY PLAN:

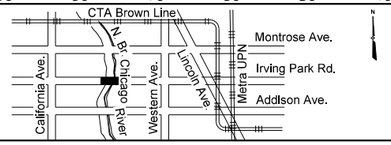

CDOT
CHICAGO DEPARTMENT OF TRANSPORTATION

EJM ENGINEERING, INC.
411 South Wells Street Suite 1000
Chicago, Illinois 60607

W. IRVING PARK ROAD AT NORTH BRANCH CHICAGO RIVER

PATH CROSS SECTIONS

STA. 204 + 70.76 TO STA. 204 + 75.00

PROJECT NO. E-5-038

DRAWING NO. XSC–12

CONTRACT NO. XXXXX

TOTAL SHEETS	SHEET NO.
184	67

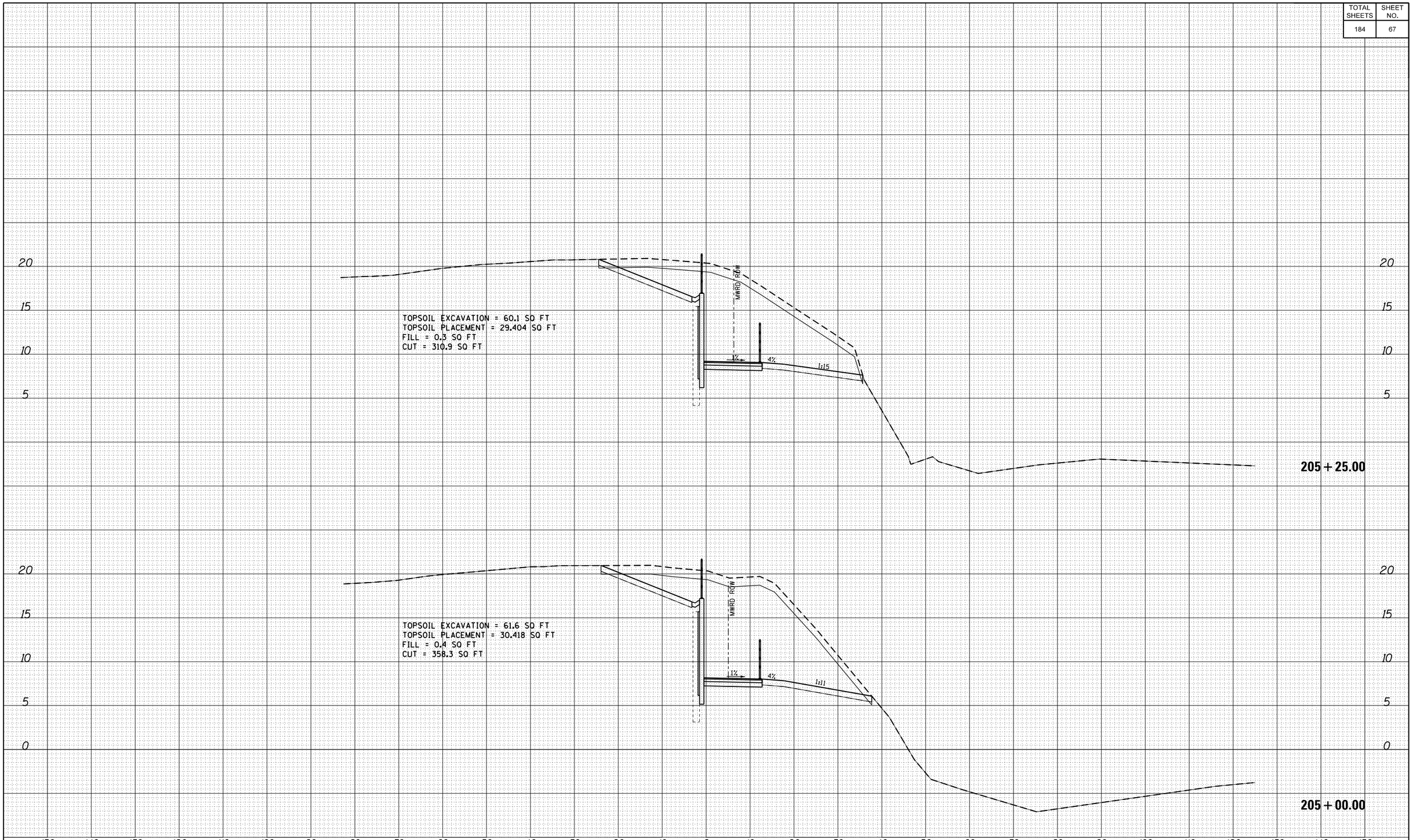

DESIGN: BJD				
DRAWN: BJD				
CHECKED: SA				
APPROVED:				
DATE: 11/29/2017				
SCALE: H: 1"=10' V: 1"=5'				
FILE:	NO.	BY	DATE	DESCRIPTION
	REVISIONS			

KEY PLAN:

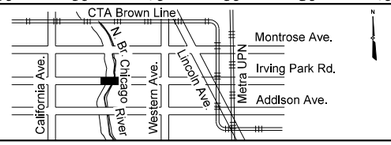

CDOT
CHICAGO DEPARTMENT OF TRANSPORTATION

EJM ENGINEERING, INC.
411 South Wells Street Suite 1000
Chicago, Illinois 60607

W. IRVING PARK ROAD AT NORTH BRANCH CHICAGO RIVER

PATH CROSS SECTIONS

STA. 205 + 00.00 TO STA. 205 + 25.00

PROJECT NO. E-5-038

DRAWING NO. XSC–13

CONTRACT NO. XXXXX

TOTAL SHEETS	SHEET NO.
184	68

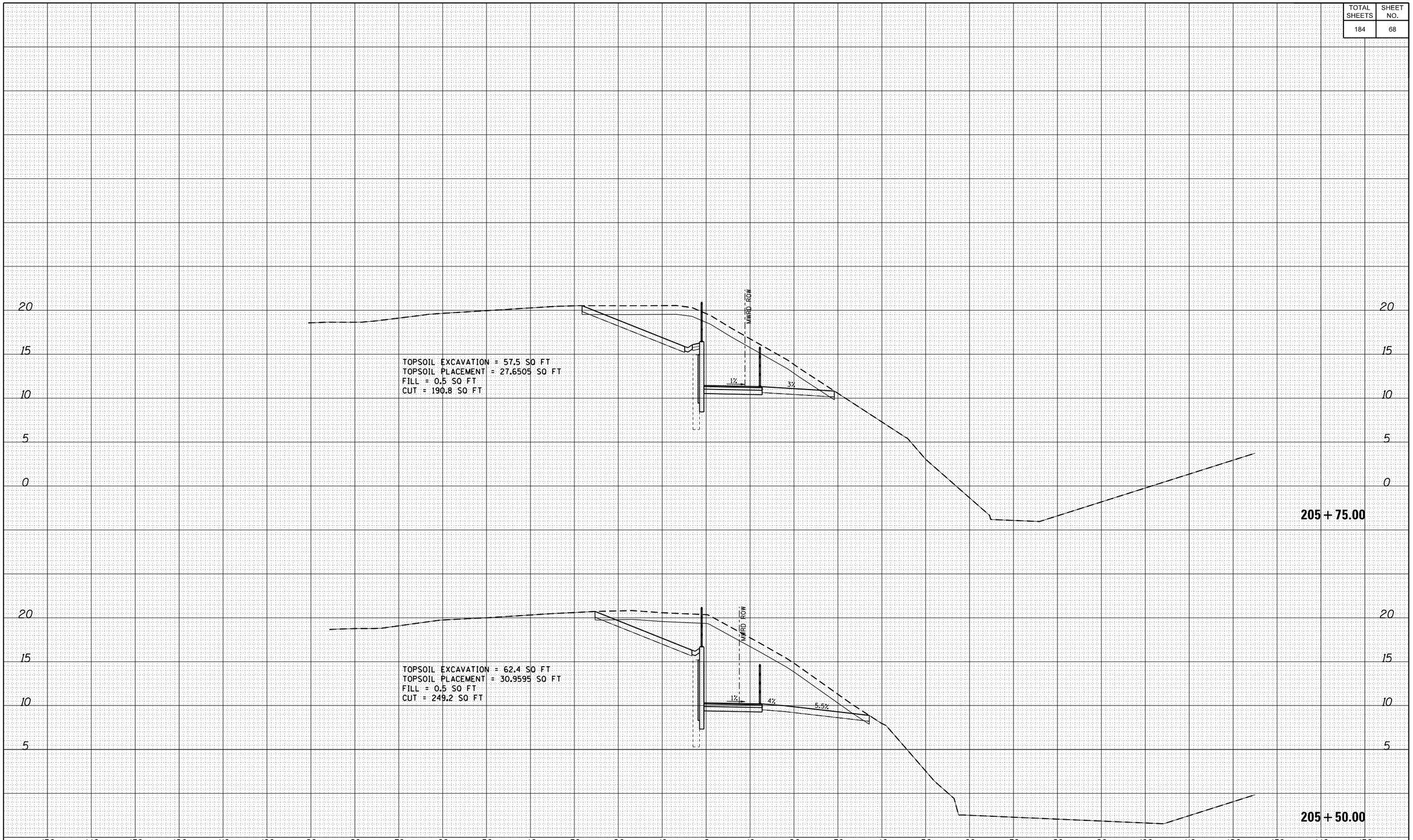

DESIGN:	BJD			
DRAWN:	BJD			
CHECKED:	SA			
APPROVED:				
DATE:	11/29/2017			
SCALE:	H: 1"=10' V: 1"=5'			
FILE:	NO.	BY	DATE	DESCRIPTION
	REVISIONS			

KEY PLAN:

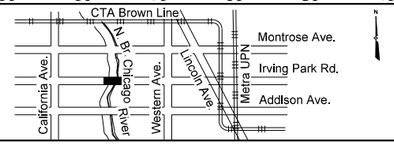

CDOT
CHICAGO DEPARTMENT OF TRANSPORTATION

EJM ENGINEERING, INC.
411 South Wells Street Suite 1000
Chicago, Illinois 60607

W. IRVING PARK ROAD AT NORTH BRANCH CHICAGO RIVER

PATH CROSS SECTIONS

STA. 205 + 50.00 TO STA. 205 + 75.00

PROJECT NO. E-5-038

DRAWING NO. XSC–14

CONTRACT NO. XXXXX

TOTAL SHEETS	SHEET NO.
184	69

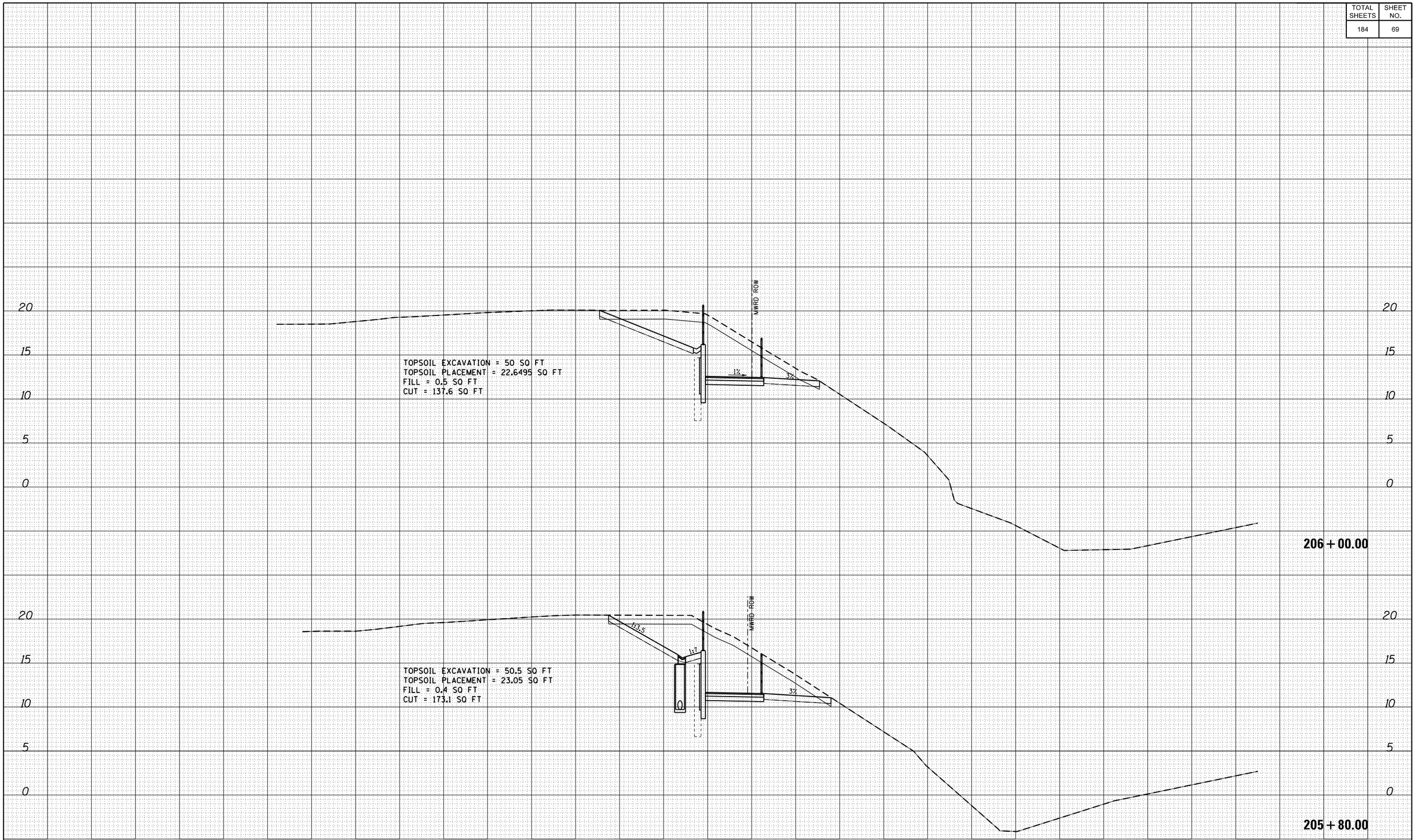

DESIGN: BJD				
DRAWN: BJD				
CHECKED: SA				
APPROVED:				
DATE: 11/29/2017				
SCALE: H: 1"=10' V: 1"=5'				
FILE:	NO.	BY	DATE	DESCRIPTION
	REVISIONS			

KEY PLAN:

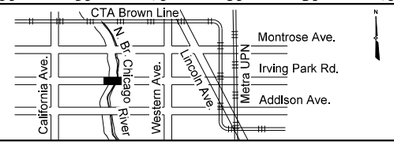

CDOT
CHICAGO DEPARTMENT OF TRANSPORTATION

EJM ENGINEERING, INC.
411 South Wells Street Suite 1000
Chicago, Illinois 60607

W. IRVING PARK ROAD AT NORTH BRANCH CHICAGO RIVER

PATH CROSS SECTIONS

STA. 205 + 80.00 TO STA. 206 + 00.00

PROJECT NO.	E-5-038
DRAWING NO.	XSC–15
CONTRACT NO.	XXXXX

TOTAL SHEETS	SHEET NO.
184	70

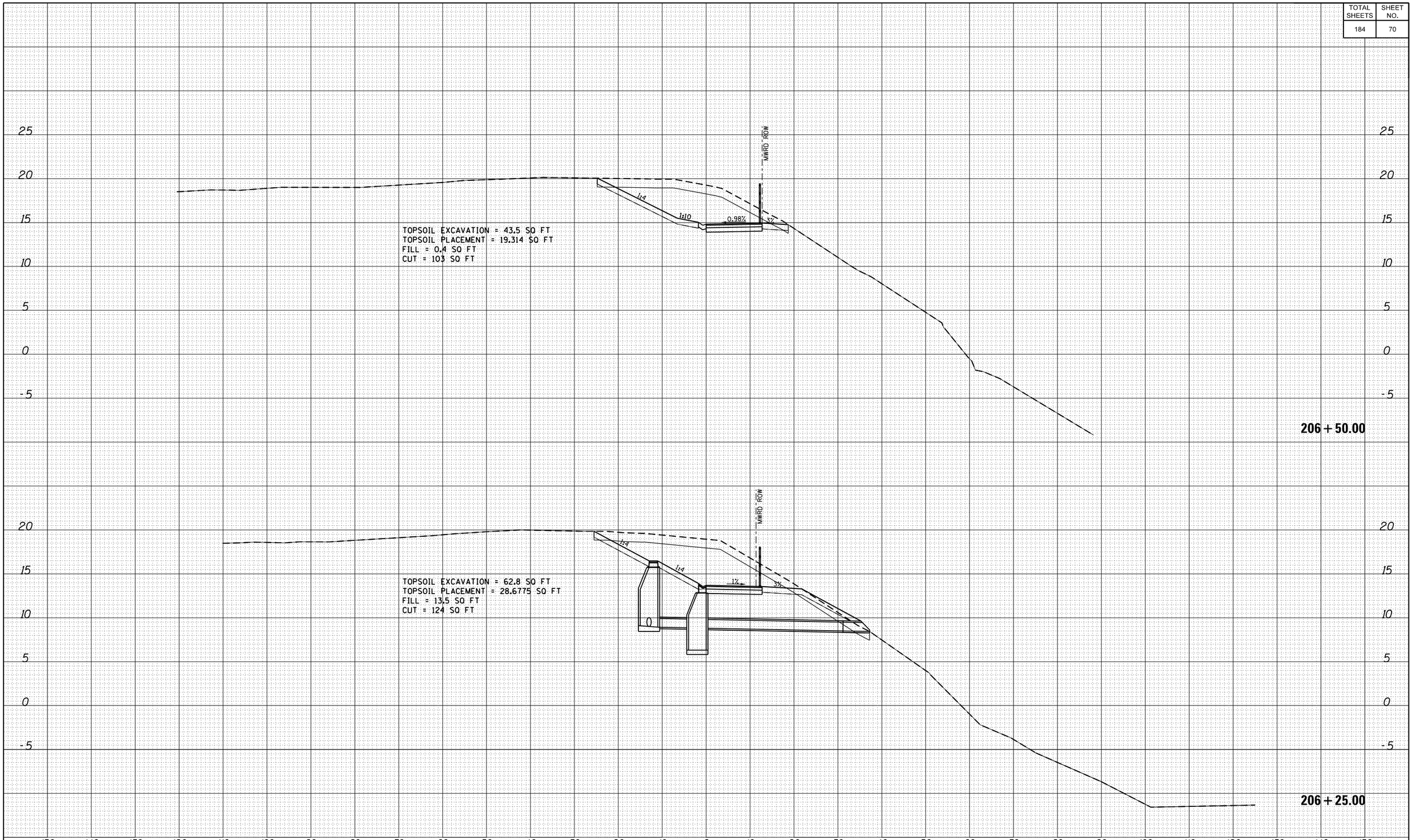

DESIGN:	BJD			
DRAWN:	BJD			
CHECKED:	SA			
APPROVED:				
DATE:	11/29/2017			
SCALE:	H: 1"=10' V: 1"=5'			
FILE:	NO.	BY	DATE	DESCRIPTION
	REVISIONS			

KEY PLAN:

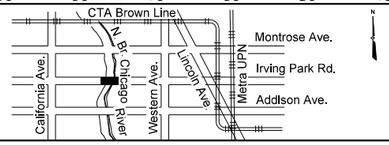

CDOT
CHICAGO DEPARTMENT OF TRANSPORTATION

EJM ENGINEERING, INC.
411 South Wells Street Suite 1000
Chicago, Illinois 60607

W. IRVING PARK ROAD AT NORTH BRANCH CHICAGO RIVER

PATH CROSS SECTIONS

STA. 206 + 25.00 TO STA. 206 + 50.00

PROJECT NO.	E-5-038
DRAWING NO.	XSC–16
CONTRACT NO.	XXXXX

TOTAL SHEETS	SHEET NO.
184	71

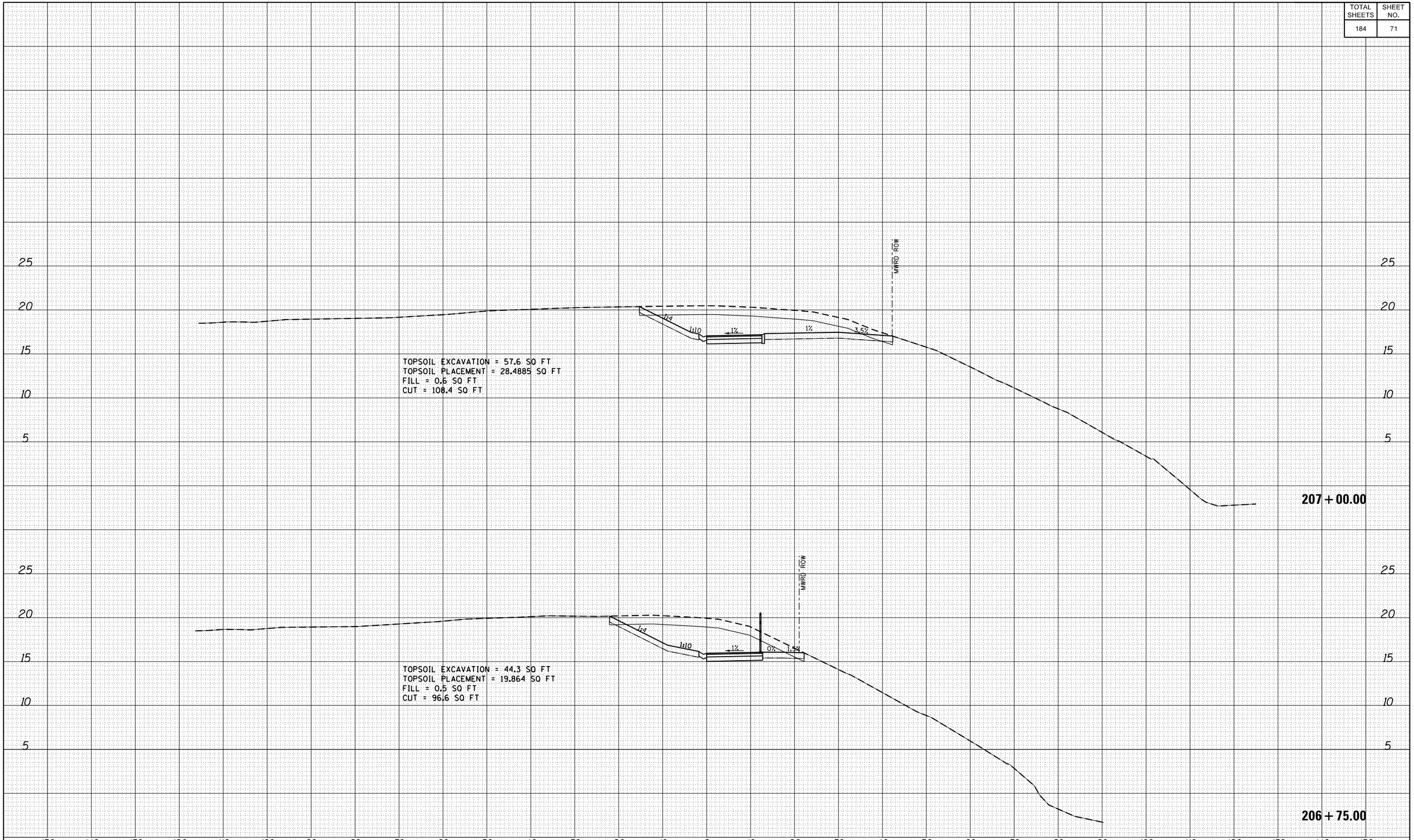

DESIGN:	BJD			
DRAWN:	BJD			
CHECKED:	SA			
APPROVED:				
DATE:	11/29/2017			
SCALE:	H: 1"=10' V: 1"=5'			
FILE:		NO.	BY	DATE	DESCRIPTION
		REVISIONS			

KEY PLAN:

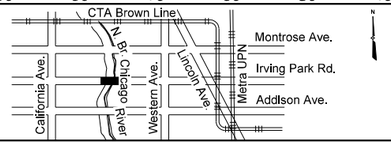

CDOT
CHICAGO DEPARTMENT OF TRANSPORTATION

EJM ENGINEERING, INC.
411 South Wells Street Suite 1000
Chicago, Illinois 60607

W. IRVING PARK ROAD AT NORTH BRANCH CHICAGO RIVER

PATH CROSS SECTIONS

STA. 206 + 75.00 TO STA. 207 + 00.00

PROJECT NO.	E-5-038
DRAWING NO.	XSC–17
CONTRACT NO.	XXXXX

TOTAL SHEETS	SHEET NO.
184	72

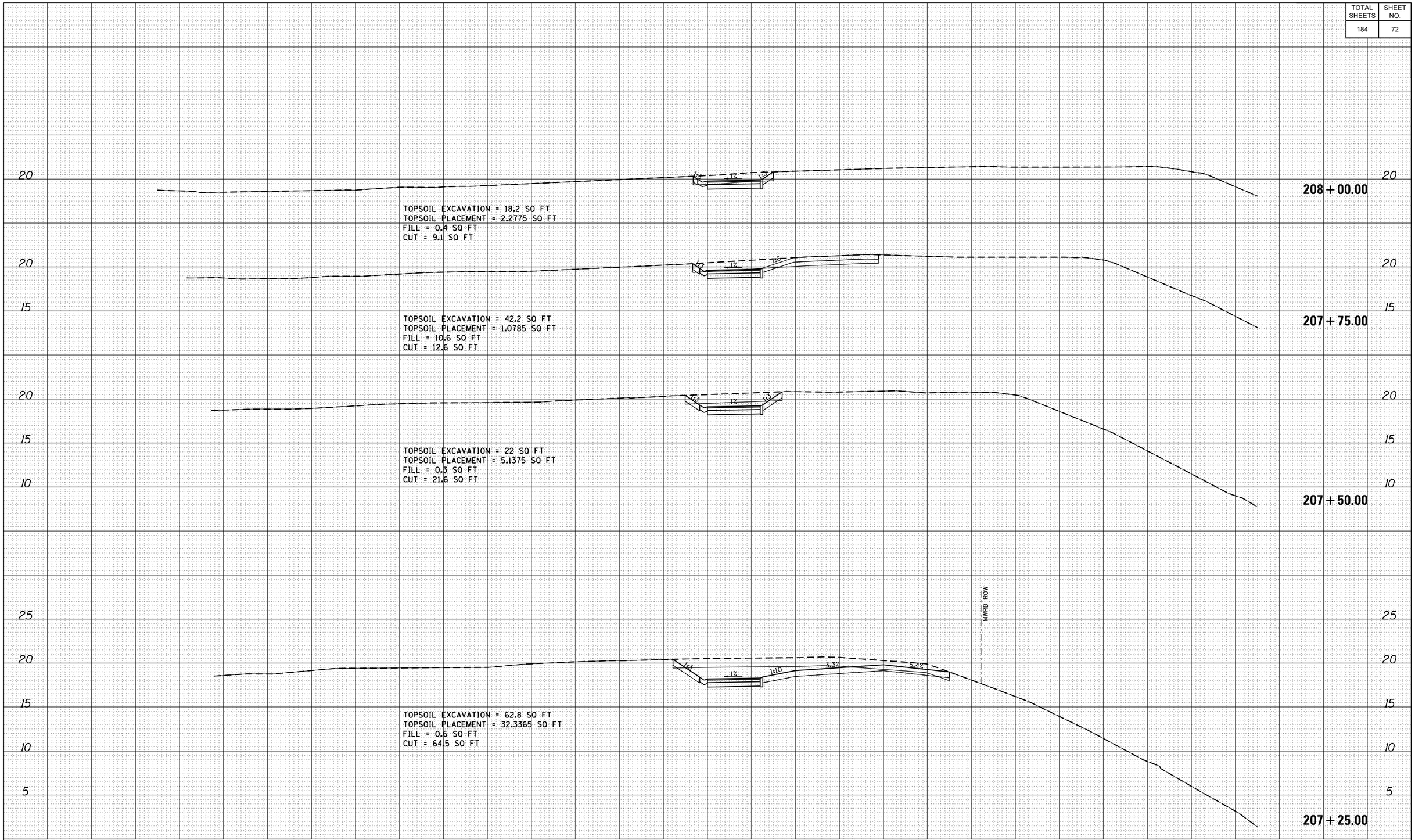

DESIGN:	BJD			
DRAWN:	BJD			
CHECKED:	SA			
APPROVED:				
DATE:	11/29/2017			
SCALE:	H: 1"=10' V: 1"=5'			
FILE:				

NO.	BY	DATE	DESCRIPTION
REVISIONS			

KEY PLAN:

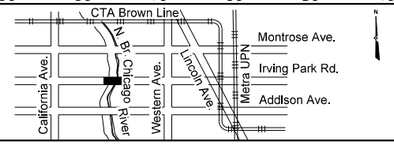

CDOT
CHICAGO DEPARTMENT OF TRANSPORTATION

EJM ENGINEERING, INC.
411 South Wells Street Suite 1000
Chicago, Illinois 60607

W. IRVING PARK ROAD AT NORTH BRANCH CHICAGO RIVER

PATH CROSS SECTIONS

STA. 207 + 25.00 TO STA. 208 + 00.00

PROJECT NO. E-5-038

DRAWING NO. XSC–18

CONTRACT NO. XXXXX

TOTAL SHEETS	SHEET NO.
184	73

150 140 130 120 110 100 90 80 70 60 50 40 30 20 10 0 10 20 30 40 50 60 70 80 90 100 110 120 130 140 150

20

208 + 50.00

TOPSOIL EXCAVATION = 0 SQ FT
TOPSOIL PLACEMENT = 0 SQ FT
FILL = 0 SQ FT
CUT = 26.8 SQ FT

20

208 + 25.00

TOPSOIL EXCAVATION = 17.3 SQ FT
TOPSOIL PLACEMENT = 3.126 SQ FT
FILL = 0.3 SQ FT
CUT = 5.4 SQ FT

150 140 130 120 110 100 90 80 70 60 50 40 30 20 10 0 10 20 30 40 50 60 70 80 90 100 110 120 130 140 150

DESIGN: BJD				
DRAWN: BJD				
CHECKED: SA				
APPROVED:				
DATE: 11/29/2017				
SCALE: H: 1"=10' V: 1"=5'				
FILE:	NO.	BY	DATE	DESCRIPTION
	REVISIONS			

KEY PLAN:

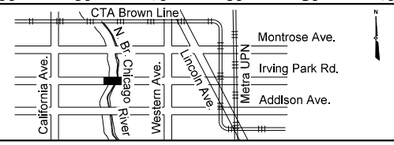

CDOT
CHICAGO DEPARTMENT OF TRANSPORTATION

EJM ENGINEERING, INC.
411 South Wells Street Suite 1000
Chicago, Illinois 60607

W. IRVING PARK ROAD AT NORTH BRANCH CHICAGO RIVER

PATH CROSS SECTIONS

STA. 208 + 25.00 TO STA. 208 + 50.00

PROJECT NO. E-5-038

DRAWING NO. XSC–19

CONTRACT NO. XXXXX

TOTAL SHEETS	SHEET NO.
184	74

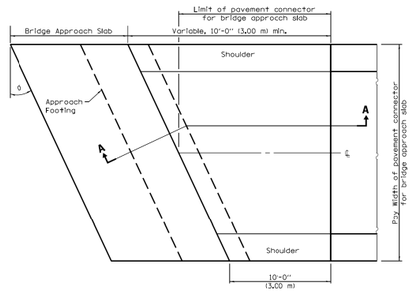

PLAN
(New or existing construction)

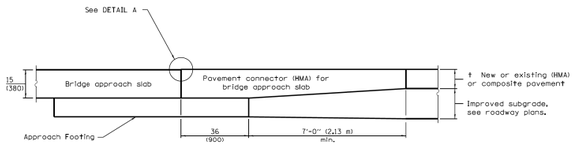

SECTION A–A

DETAIL A

GENERAL NOTES

THICKNESS- "T"-Thickness of Pavement.

See Standard 610001 for shoulder inlet with curb when required.

See plans for details of bridge approach slab and approach footing.

All dimensions are in inches (millimeters) unless otherwise shown.

DATE	REVISIONS
4-1-16	New standard.

PAVEMENT CONNECTOR (HMA) FOR BRIDGE APPROACH SLAB

STANDARD 420406

Illinois Department of Transportation

APPROVED: April 5, 2016
ENGINEER OF POLICY AND PROCEDURES

APPROVED: April 5, 2016
ENGINEER OF BUREAU OF ENVIRONMENT

BRIDGE MANUAL

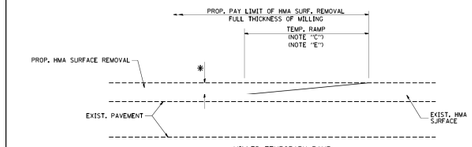

MILLED TEMPORARY RAMP
(FOR BUTT JOINT AND HMA TAPER SEE DETAIL BELOW)

OPTION 1

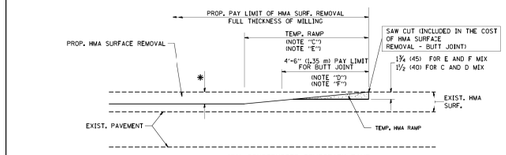

HMA CONSTRUCTED TEMPORARY RAMP
(FOR BUTT JOINT AND HMA TAPER SEE DETAIL BELOW)

OPTION 2

TYPICAL TEMPORARY RAMP

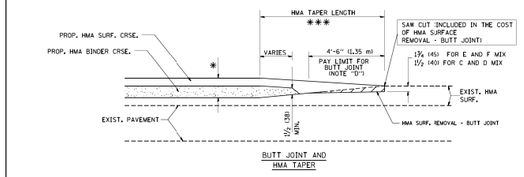

BUTT JOINT AND HMA TAPER

TYPICAL BUTT JOINT AND HMA TAPER FOR MILLING AND RESURFACING

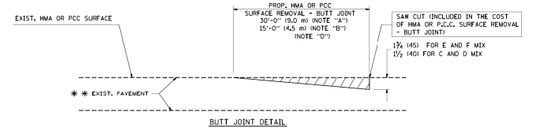

BUTT JOINT DETAIL

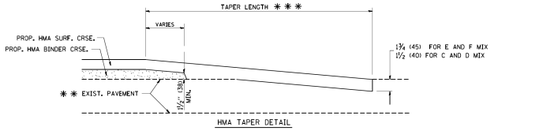

HMA TAPER DETAIL

TYPICAL BUTT JOINT AND HMA TAPER FOR RESURFACING ONLY

✱✱ PC CONCRETE, HMA OR HMA RESURFACED PAVEMENT.

NOTES

A: MAINLINE ROADWAYS AND MAJOR SIDE ROADS.

B: MINOR SIDE ROADS.

C: THE TEMP. RAMP SHALL BE CONSTRUCTED IMMEDIATELY UPON REMOVAL OF THE EXISTING HMA SURFACE.

D: THE BUTT JOINT SHALL BE CONSTRUCTED IMMEDIATELY PRIOR TO PLACING THE PROPOSED HMA COURSES.

E: TAPER THE TEMP. RAMP AT A RATE OF 3'-0" (900 mm) PER 1 INCH (25 mm) OF MILLING THICKNESS.

F: INSTALLATION AND REMOVAL OF THE 4'-6" (1.35 m) TEMP. RAMP IS INCLUDED IN COST OF HMA SURFACE REMOVAL - BUTT JOINT

G: SEE ARTICLE 406.08 AND 406.14 OF THE STANDARD SPECIFICATIONS FOR "HMA AND/OR PCC SURFACE REMOVAL, BUTT JOINT".

✱ SEE TYPICAL SECTIONS FOR MILLING THICKNESS.

✱✱✱ 20'-0" (6.1 m) PER 1 (25) RESURFACING (NOTE "A")
10'-0" (3.0 m) PER 1 (25) RESURFACING (NOTE "B")

BASIS OF PAYMENT:

THE BUTT JOINT WILL BE PAID FOR AT THE CONTRACT UNIT PRICE PER SQUARE YARD (SQUARE METER) FOR "HOT-MIX ASPHALT SURFACE REMOVAL - BUTT JOINT" OR FOR "PORTLAND CEMENT CONCRETE SURFACE REMOVAL- BUTT JOINT".

ALL DIMENSIONS ARE IN INCHES (MILLIMETERS) UNLESS OTHERWISE SHOWN.

FILE NAME: M:\standard\325x34\std325.dgn	USER NAME = gagi.arabo	DESIGNED - W. DE YONG	REVISED - R. SHAH 10-25-94
		DRAWN -	REVISED - A. ABBAS 03-21-97
	PLOT SCALE = 50.0000 ' / IN.	CHECKED -	REVISED - W. GOMEZ 04-06-01
	PLOT DATE = 1/4/2008	DATE - 06-13-90	REVISED - R. BORO 01-01-07

STATE OF ILLINOIS
DEPARTMENT OF TRANSPORTATION

BUTT JOINT AND HMA TAPER DETAILS

SCALE: NONE | SHEET NO. 1 OF 1 SHEETS | STA. | TO STA.

F.A.P. RTE.	SECTION	COUNTY	TOTAL SHEET SHEETS NO.
	BD400-05 BD32	CONTRACT NO.	
FED. ROAD DIST. NO.	ILLINOIS FED. AID PROJECT		

...\IE5038-sht-std-1.dgn
11/29/2017 1:39:30 PM

DESIGN:				
DRAWN:				
CHECKED:				
APPROVED: DF				
DATE: 11/29/2017				
SCALE:				
FILE:	NO.	BY	DATE	DESCRIPTION
	REVISIONS			

KEY PLAN:

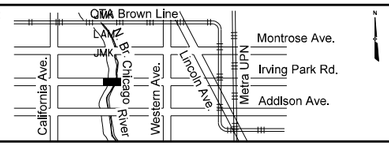

CDOT
CHICAGO DEPARTMENT OF TRANSPORTATION

BOWMAN, BARRETT & ASSOCIATES INC.
CONSULTING ENGINEERS
Chicago, Illinois
312.228.0100
www.bbandainc.com

W. IRVING PARK ROAD AT NORTH BRANCH CHICAGO RIVER

STANDARD DETAILS

PROJECT NO. E-5-038

DRAWING NO. SD–1

CONTRACT NO. XXXXX

TOTAL SHEETS	SHEET NO.
184	75

DETAIL OF FRAME ADJUSTMENT IN PAVEMENT

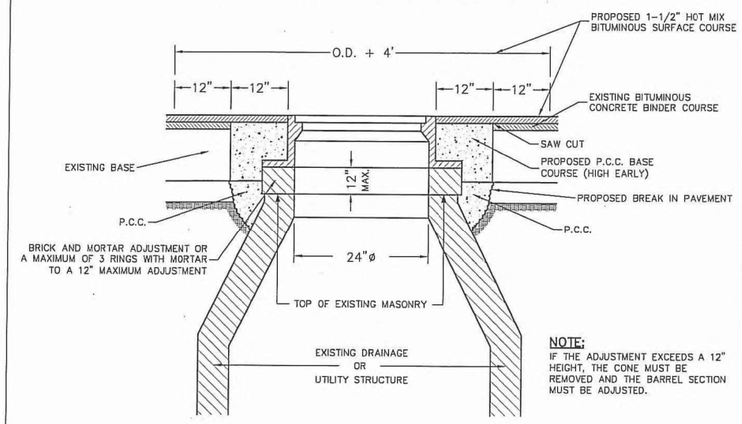

NOTE:
IF THE ADJUSTMENT EXCEEDS A 12" HEIGHT, THE CONE MUST BE REMOVED AND THE BARREL SECTION MUST BE ADJUSTED.

PLAN VIEW

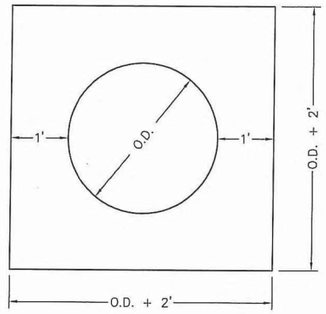

	DATE	REVISION	CITY OF CHICAGO
CDOT CHICAGO DEPARTMENT OF TRANSPORTATION	–	–	FRAME ADJUSTMENT IN PAVEMENT
			DATE: 12/22/06 · SHEET: A-2-15 · DRAWN BY: CDOT

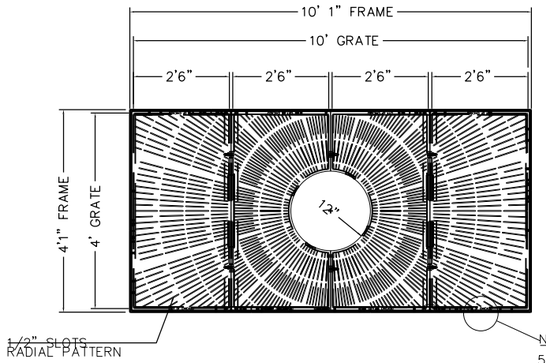

NOTE
5 /8" TEXT "CITY OF CHICAGO " STAMPED ON TOP AND BOTTOM OF EACH PIECE FACING OUTWARD

1 4 X 10 TREE GRATE – PLAN VIEW
N.T.S.

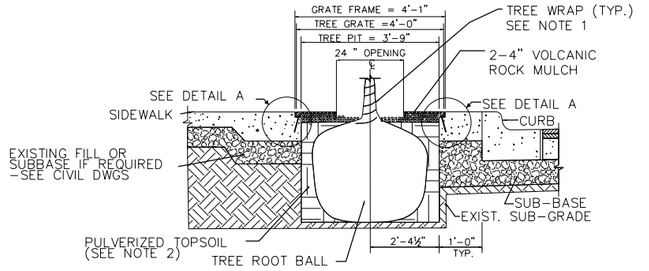

2 4 X 10 TREE PIT – CROSS SECTION (WITH CAST IRON TREE GRATE FRAME)
N.T.S.

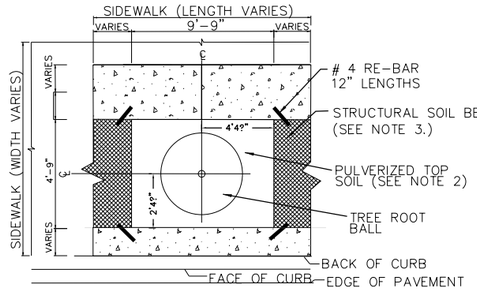

3 4 X 10 TREE PIT – PLAN VIEW STRUCTURAL SOIL
N.T.S.

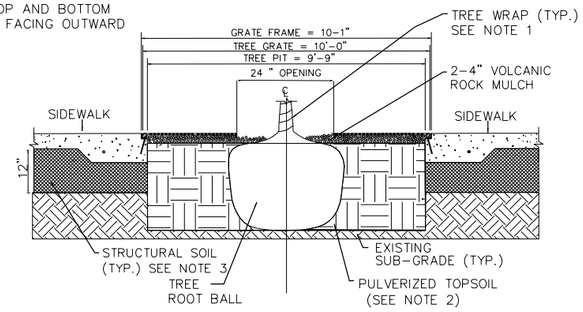

4 4 X 10 TREE PIT – LONGITUDINAL SECTION (WITH CAST IRON TREE GRATE FRAME)
N.T.S.

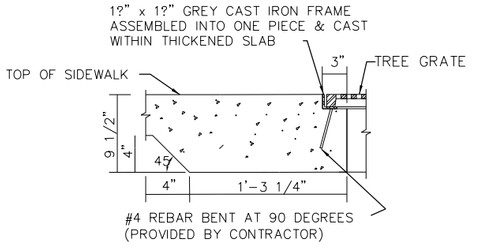

DETAIL A – GRATE FRAME AT THICKENED SLAB
N.T.S.

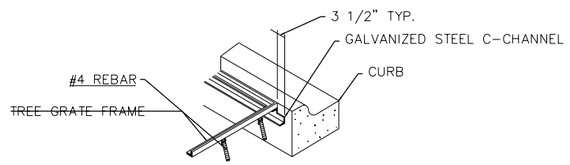

5 TREE GRATE FRAME AT BACK OF CURB
N.T.S.

GENERAL NOTE:
HAND EXCAVATION IS REQUIRED AT LEAST 18 INCHES ON EITHER SIDE OF A MARKED FACILITY. CONTRACTOR/EXCAVATOR IS EXPECTED TO HONOR ALL TIME/MARKING REQUIREMENTS AND DIG IN A REASONABLE AND PRUDENT MANNER, TO AVOID DAMAGING UNDERGROUND FACILITIES. IF DAMAGE TO AN UNDERGROUND FACILITY SHOULD OCCUR, IMMEDIATELY CALL DIGGER AT (312) 744-7000.

NOTES:
1. TREE WRAP SHOULD ONLY BE INSTALLED DURING THE FALL PLANTING SEASON ON SPECIES SUSCEPTIBLE TO FROST AS DETERMINED BY THE COMMISSIONER.

2. SEE TREE PLANTING SPECIFICATIONS AND DETAILS FOR BACKFILL MATERIAL AND PLACEMENT.

3. STRUCTURAL SOIL IS TO BE PLACED ON EXISTING SUBGRADE AT 12" THICK BELOW THE PROPOSED SIDEWALK. IT SHALL BE PLACED IN 4' BANDS BETWEEN A DESIGNATED GROUPING OF TREE PITS ENDING 6' PAST THE GRATE OF THE LAST TREE IN THE GROUP AS SHOWN IN THE CONTRACT PLANS.

DESIGN:				
DRAWN:				
CHECKED:				
APPROVED: DF				
DATE: 11/29/2017				
SCALE:				
FILE:	NO.	BY	DATE	DESCRIPTION
	REVISIONS			

KEY PLAN:

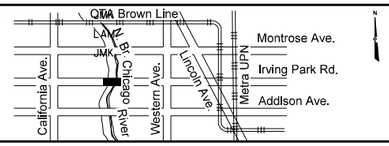

CDOT CHICAGO DEPARTMENT OF TRANSPORTATION

BOWMAN, BARRETT & ASSOCIATES INC.
CONSULTING ENGINEERS
Chicago, Illinois
312.228.0100
www.bbandainc.com

W. IRVING PARK ROAD AT NORTH BRANCH CHICAGO RIVER

STANDARD DETAILS

PROJECT NO. E-5-038
DRAWING NO. SD-2
CONTRACT NO. XXXXX

11/29/2017 1:39:52 PM ...\E5038-sht-std-2.dgn

TOTAL SHEETS	SHEET NO.
184	76

P.C. CONCRETE CURB & GUTTER

NOTE: H = VARIABLE 3" TO 9"
X = THICKNESS OF PAVEMENT
Y = ONE HALF THE THICKNESS OF CONCRETE PAVEMENT OR CONCRETE BASE.
Z = 10" OR THICKNESS OF PAVEMENT – WHICHEVER IS GREATER

TYPE BV, 12 OR TYPE 3 CURB & GUTTER

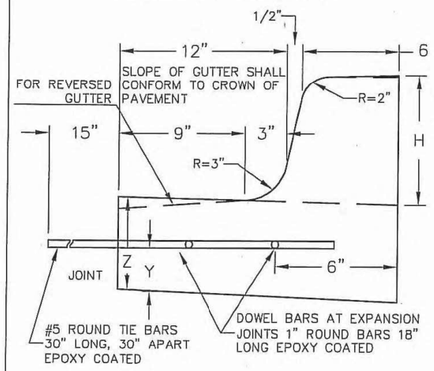

TYPE B OR TYPE 4 CURB BARRIER CURB

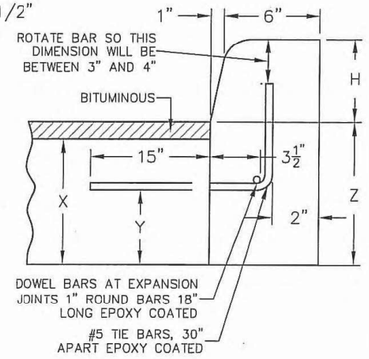

JOINTS IN CURB, COMBINED CURB & GUTTER

TRANSVERSE JOINTS OF A TYPE SIMILAR TO THAT USED IN THE ADJACENT PAVEMENT SHALL BE INSTALLED IN THE CURB, GUTTER AND COMBINED CURB & GUTTER IN PROLONGATION WITH THE JOINTS IN THE PAVEMENT. THE DETAILS OF THE TRANSVERSE JOINTS IN THE CURB, GUTTER AND COMBINED CURB & GUTTER SHALL BE APPROVED BY THE COMMISSIONER. CURB, GUTTER OR COMBINED CURB & GUTTER IS CONSTRUCTED ADJACENT TO A FLEXIBLE BASE PAVEMENT, 1" THICK EXPANSION JOINTS COMPOSED OF BITUMINOUS PERFORMED JOINT FILLER SHALL BE INSTALLED IN THE CURB AND/OR GUTTER AT POINTS OF CURVATURE AND AT CONSTRUCTION JOINTS. CONTRACTION JOINTS SHALL ALSO BE PLACED BETWEEN THESE EXPANSION JOINTS AT DISTANCES NOT EXCEEDING 20 FEET. ALL TIE BARS SHALL BE DEFORMED–ALL DOWEL BARS SHALL BE SMOOTH.

NOTE: ALL TIE BARS AND DOWEL BARS TO BE EPOXY COATED.

*AT LOCATIONS REQUIRING DEPRESSED CURBS SEE THE ADA STANDARDS FOR CONSTRUCTION DETAILS

CDOT CHICAGO DEPARTMENT OF TRANSPORTATION	DATE	REVISION	CITY OF CHICAGO
	–	–	P.C.C. CURB & GUTTER
			DATE: 12/12/06 · SHEET: A-2-6 · DRAWN BY: CDOT

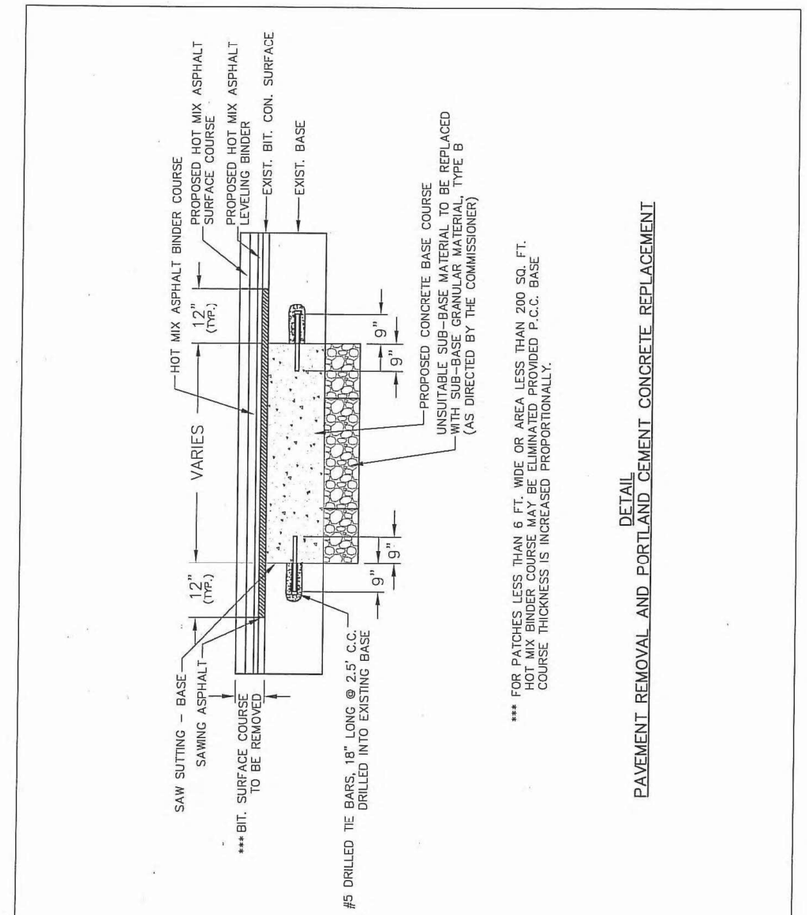

PAVEMENT REMOVAL AND PORTLAND CEMENT CONCRETE REPLACEMENT DETAIL

CDOT CHICAGO DEPARTMENT OF TRANSPORTATION	DATE	REVISION	CITY OF CHICAGO
	–	–	STREET PAVEMENT RESTORATION DETAIL
			DATE: 01-11-2007 · SHEET: A-2-2C · DRAWN BY: CDOT

DESIGN:				
DRAWN:				
CHECKED:				
APPROVED: DF				
DATE: 11/29/2017				
SCALE:				
FILE:	NO.	BY	DATE	DESCRIPTION
	REVISIONS			

KEY PLAN:

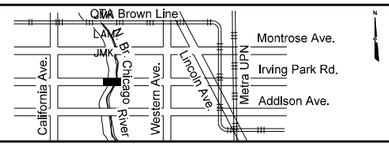

CDOT CHICAGO DEPARTMENT OF TRANSPORTATION

BOWMAN, BARRETT & ASSOCIATES INC.
CONSULTING ENGINEERS
Chicago, Illinois
312.228.0100
www.bbandainc.com

W. IRVING PARK ROAD AT NORTH BRANCH CHICAGO RIVER

STANDARD DETAILS

PROJECT NO. E-5-038
DRAWING NO. SD–3
CONTRACT NO. XXXXX

11/29/2017 1:40:06 PM ...\E5038-sht-std-3.dgn

TOTAL SHEETS	SHEET NO.
184	77

CATCH BASIN ADJUSTMENT IN EXISTING PAVEMENT

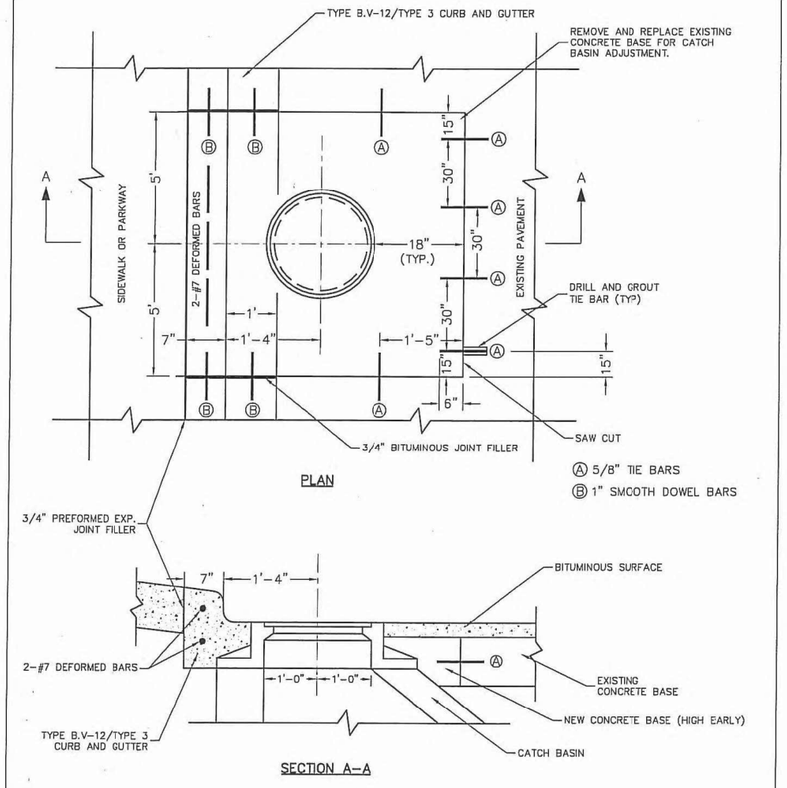

CDOT CHICAGO DEPARTMENT OF TRANSPORTATION	DATE	REVISION	CITY OF CHICAGO
	—	—	CATCH BASIN ADJUSTMENT IN EXISTING PAVEMENT
			DATE: 12/22/06 · SHEET: A-2-14 · DRAWN BY: CDOT

100

...\E5038-sht-std-4.dgn
11/29/2017 1:40:35 PM

DESIGN:				
DRAWN:				
CHECKED:				
APPROVED: DF				
DATE: 11/29/2017				
SCALE:				
FILE:	NO.	BY	DATE	DESCRIPTION
	REVISIONS			

KEY PLAN:

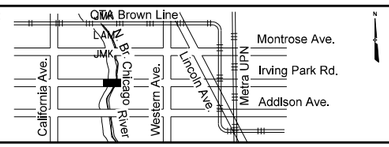

CDOT CHICAGO DEPARTMENT OF TRANSPORTATION

BOWMAN, BARRETT & ASSOCIATES INC.
CONSULTING ENGINEERS
Chicago, Illinois
312.228.0100
www.bbandainc.com

W. IRVING PARK ROAD AT NORTH BRANCH CHICAGO RIVER

STANDARD DETAILS

PROJECT NO. E-5-038

DRAWING NO. SD-4

CONTRACT NO. XXXXX

TOTAL SHEETS	SHEET NO.
184	78

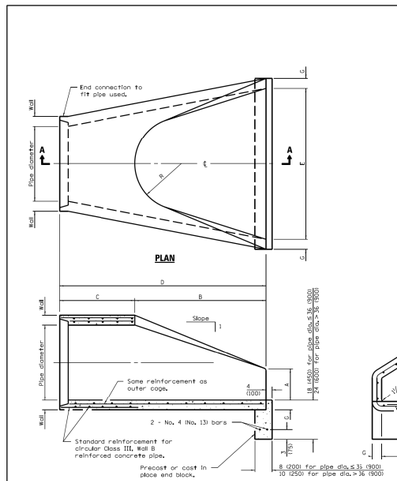

PIPE DIA.	APPROX. QTY. for Roll B (kg)	WALL	A	B	C	D	E	G	R	APPROX. SLOPE
12 (300)	530 (240)	2 (51)	4 (102)	24 (610)	4'-0⅜" (1,241 m)	6'-0⅜" (1,851 m)	24 (610)	2 (51)	9 (229)	1:2.4
15 (375)	740 (335)	2¼ (57)	6 (152)	27 (686)	3'-10" (1,168 m)	6'-1" (1,854 m)	30 (762)	2¼ (57)	11 (280)	1:2.4
18 (450)	990 (450)	2½ (64)	9 (229)	27 (686)	3'-10" (1,168 m)	6'-1" (1,854 m)	36 (914)	2½ (64)	12 (305)	1:2.4
21 (525)	1280 (580)	2¾ (70)	9 (229)	33 (838)	3'-10" (965)	6'-1" (1,854 m)	36 (914)	2½ (70)	13 (330)	1:2.4
24 (600)	1520 (690)	3 (76)	9½ (241)	3'-7½" (1,105 m)	3'-10" (762)	6'-1" (1,867 m)	4'-0" (1,219 m)	3 (76)	14 (356)	1:2.5
27 (675)	1930 (875)	3¼ (83)	10½ (267)	4'-0" (1,219 m)	2'-5½" (648)	6'-1½" (1,867 m)	4'-6" (1,372 m)	3½ (83)	14½ (368)	1:2.4
30 (750)	2190 (995)	3½ (89)	12 (305)	4'-6" (1,375 m)	1'-9¾" (502)	6'-1⅜" (1,874 m)	5'-0" (1,524 m)	3½ (89)	15 (381)	1:2.5
33 (825)	3200 (1450)	3¾ (95)	13½ (343)	4'-10½" (1,486 m)	3'-9¼" (997)	8'-1⅜" (2,483 m)	5'-6" (1,676 m)	3¾ (95)	17½ (445)	1:2.5
36 (900)	4100 (1860)	4 (102)	15 (381)	5'-3" (1,61 m)	3'-9¼" (883)	8'-1⅜" (2,483 m)	6'-0" (1,829 m)	4 (102)	20 (508)	1:2.5
42 (1050)	5380 (2440)	4½ (114)	21 (533)	5'-3" (1,61 m)	3'-9¼" (883)	8'-2" (2,489 m)	6'-6" (1,981 m)	4½ (114)	22 (559)	1:2.5
48 (1200)	6550 (2970)	5 (127)	24 (610)	6'-0" (1,829 m)	3'-9¼" (660)	8'-2" (2,489 m)	7'-0" (2,134 m)	5 (127)	22 (559)	1:2.5
54 (1350)	8240 (3740)	5½ (140)	27 (686)	5'-5" (1,651 m)	3'-9¼" (883)	8'-4" (2,54 m)	7'-6" (2,286 m)	5½ (140)	24 (610)	1:2.0
60 (1500)	8730 (3960)	6 (152)	35 (889)	5'-0" (1,524 m)	3'-9¼" (991)	8'-3" (2,515 m)	8'-0" (2,438 m)	5 (127)	•	1:1.9
66 (1650)	10710 (4860)	6½ (165)	30 (762)	6'-0" (1,829 m)	3'-9¼" (686)	8'-3" (2,515 m)	8'-6" (2,591 m)	5½ (140)	•	1:1.7
72 (1800)	12520 (5680)	7 (178)	36 (914)	6'-6" (1,981 m)	3'-9¼" (533)	8'-3" (2,514 m)	9'-0" (2,743 m)	6 (152)	•	1:1.8
78 (1950)	14770 (6700)	7½ (191)	36 (914)	7'-6" (2,286 m)	3'-9¼" (533)	9'-3" (2,819 m)	9'-6" (2,896 m)	6½ (165)	•	1:1.8
84 (2100)	18160 (8240)	8 (203)	36 (914)	7'-6½" (2,293 m)	3'-9¼" (533)	9'-3½" (2,832 m)	10'-0" (3,048 m)	6½ (165)	•	1:1.6

• Radius as furnished by manufacturer

GENERAL NOTES

All slope ratios are expressed as units of vertical displacement to units of horizontal displacement (VH).

All dimensions are in inches (millimeters) unless otherwise shown.

Illinois Department of Transportation
PASSED January 1, 2004 — Engineer of Policy and Procedures
APPROVED January 1, 2004 — Engineer of Design and Environment
07-01-14 (BRSD)

DATE	REVISIONS
1-1-11	Clarified ref. to pipe dia. on Section A-A. Changed "inner to outer" cage ref.
1-1-09	Switched units to English (metric).

PRECAST REINFORCED CONCRETE FLARED END SECTION

STANDARD 542301-03

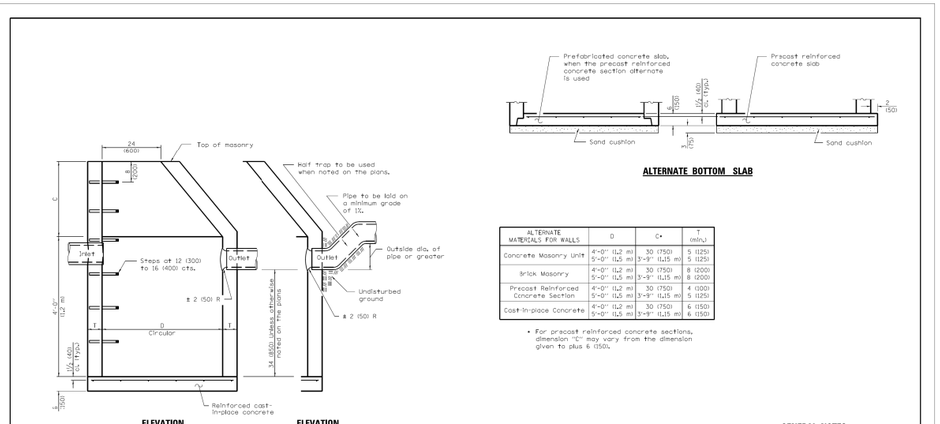

ALTERNATE BOTTOM SLAB

ALTERNATE MATERIALS FOR WALLS	D	C•	T (min.)
Concrete Masonry Unit	4'-0" (1,2 m) 5'-0" (1,5 m)	30 (750) 3'-9" (1,15 m)	5 (125) 5 (125)
Brick Masonry	4'-0" (1,2 m) 5'-0" (1,5 m)	30 (750) 3'-9" (1,15 m)	8 (200) 8 (200)
Precast Reinforced Concrete Section	4'-0" (1,2 m) 5'-0" (1,5 m)	30 (750) 3'-9" (1,15 m)	4 (100) 5 (125)
Cast-in-place Concrete	4'-0" (1,2 m) 5'-0" (1,5 m)	30 (750) 3'-9" (1,15 m)	6 (150) 6 (150)

• For precast reinforced concrete sections, dimension "C" may vary from the dimension given to plus 6 (150).

GENERAL NOTES

Bottom slabs shall be reinforced with a minimum of 0.20 sq. in./ft. (420 sq. mm/m) in both directions with a maximum spacing of 12 (300).

Bottom slabs may be connected to the riser as determined by the fabricator; however, only a single row of reinforcement around the perimeter may be utilized.

See Standard 602601 for optional precast reinforced concrete flat slab top.

See Standard 602701 for details of steps.

All dimensions are in inches (millimeters) unless otherwise shown.

Illinois Department of Transportation
PASSED January 1, 2011 — Engineer of Policy and Procedures
APPROVED January 1, 2011 — Engineer of Design and Environment
07-01-14 (BRSD)

DATE	REVISIONS
1-1-11	Added "Outside" to half trap note. Detail refs. in slabs.
	Revised general notes.
1-1-09	Switched units to English (metric).

CATCH BASIN TYPE A

STANDARD 602001-02

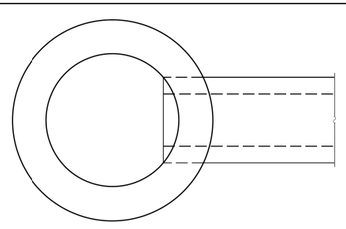

PLAN

ALTERNATE MATERIALS FOR WALLS	T
BRICK MASONRY	8 (200)
CAST-IN-PLACE CONCRETE	6 (150)
CONCRETE MASONRY UNIT	5 (125)
PRECAST REINFORCED CONCRETE SECTION	3 (75)

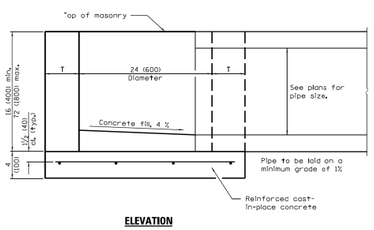

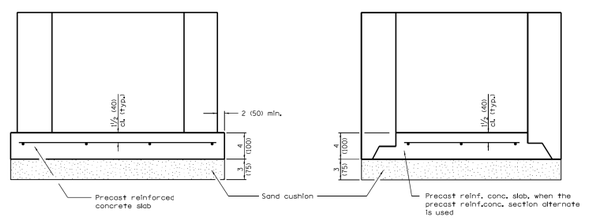

ALTERNATE METHODS

GENERAL NOTES

Bottom slabs shall be reinforced with a minimum of 0.24 sq. in./ft. (510 sq. mm/m) in both directions with a maximum spacing of 10 (250).

Bottom slabs may be connected to the riser as determined by the fabricator; however, only a single row of reinforcement around the perimeter may be utilized.

All dimensions are in inches (millimeters) unless otherwise shown.

Illinois Department of Transportation
PASSED January 1, 2004 — Engineer of Policy and Procedures
APPROVED January 1, 2004 — Engineer of Design and Environment
07-01-14 (BRSD)

DATE	REVISIONS
1-1-14	Increased height to 72 (1800) maximum.
1-1-11	Detailed rein. in slabs.
	Added max. limit to height.
	Added general notes.

INLET – TYPE A

STANDARD 602301-04

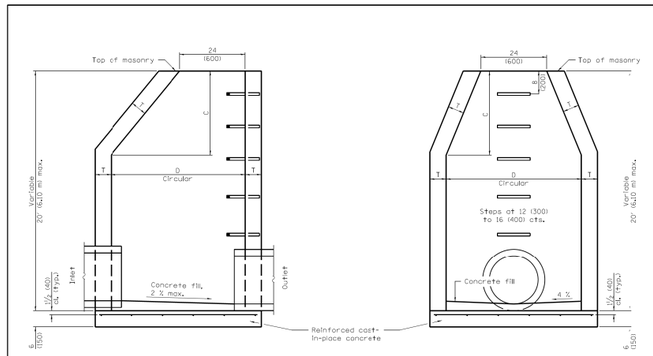

ALTERNATE MATERIALS FOR WALLS	D	C•	T (min.)
Concrete Masonry Unit	4'-0" (1,2 m) 5'-0" (1,5 m)	30 (750) 3'-9" (1,15 m)	5 (125) 5 (125)
Brick Masonry	4'-0" (1,2 m) 5'-0" (1,5 m)	30 (750) 3'-9" (1,15 m)	8 (200) 8 (200)
Precast Reinforced Concrete Section	4'-0" (1,2 m) 5'-0" (1,5 m)	30 (750) 3'-9" (1,15 m)	4 (100) 5 (125)
Cast-in-place Concrete	4'-0" (1,2 m) 5'-0" (1,5 m)	30 (750) 3'-9" (1,15 m)	6 (150) 6 (150)

• For precast reinforced concrete sections, dimension "C" may vary from the dimension given to plus 6 (150).

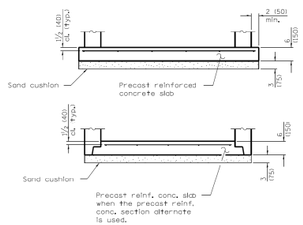

ALTERNATE BOTTOM SLAB

GENERAL NOTES

Bottom slabs shall be reinforced with a minimum of 0.31 sq. in./ft. (660 sq. mm/m) in both directions with a maximum spacing of 12 (300).

Bottom slabs may be connected to the riser as determined by the fabricator; however, only a single row of reinforcement around the perimeter may be utilized.

See Standard 602701 for details of steps.

See Standard 602601 for optional Precast Reinforced Concrete Flat Slab Top.

All dimensions are in inches (millimeters) unless otherwise shown.

Illinois Department of Transportation
PASSED January 1, 2011 — Engineer of Policy and Procedures
APPROVED January 1, 2011 — Engineer of Design and Environment
07-01-14 (BRSD)

DATE	REVISIONS
1-1-11	Detailed rein. in slabs.
	Added max. limit to height.
	Revised general notes.
1-1-09	Switched units to English (metric).

MANHOLE TYPE A

STANDARD 602401-03

...\E5038-sht-std-5.dgn
11/29/2017 1:40:49 PM

DESIGN:				
DRAWN:				
CHECKED:				
APPROVED: DF				
DATE: 11/29/2017				
SCALE:				
FILE:	NO.	BY	DATE	DESCRIPTION
	REVISIONS			

KEY PLAN:

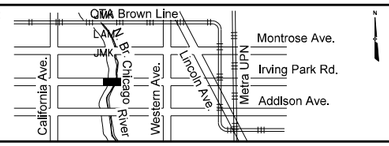

CDOT
CHICAGO DEPARTMENT OF TRANSPORTATION

BOWMAN, BARRETT & ASSOCIATES INC.
CONSULTING ENGINEERS
Chicago, Illinois
312.228.0100
www.bbandainc.com

W. IRVING PARK ROAD AT NORTH BRANCH CHICAGO RIVER

STANDARD DETAILS

PROJECT NO. E-5-038

DRAWING NO. SD–5

CONTRACT NO. XXXXX

TOTAL SHEETS	SHEET NO.
184	79

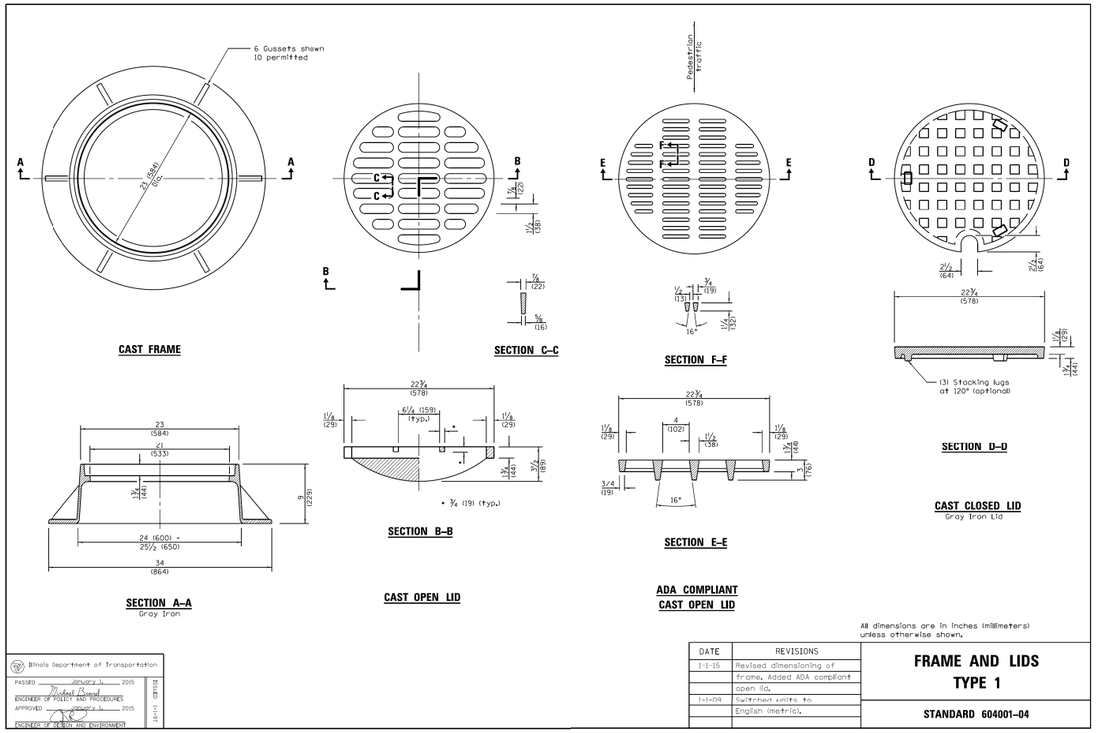

CAST FRAME

SECTION C–C

SECTION F–F

SECTION D–D

SECTION A–A
Gray Iron

SECTION B–B

CAST OPEN LID

ADA COMPLIANT CAST OPEN LID

CAST CLOSED LID
Gray Iron Lid

All dimensions are in inches (millimeters) unless otherwise shown.

Illinois Department of Transportation
PASSED January 1, 2015
ENGINEER OF POLICY AND PROCEDURES Michael Brand
APPROVED January 1, 2015
ENGINEER OF BUREAU OF ENVIRONMENT
STANDARD 604001-04

DATE	REVISIONS
1-1-15	Revised dimensioning of frame. Added ADA compliant open lid.
1-1-09	Switched units to English (metric).

FRAME AND LIDS TYPE 1

STANDARD 604001–04

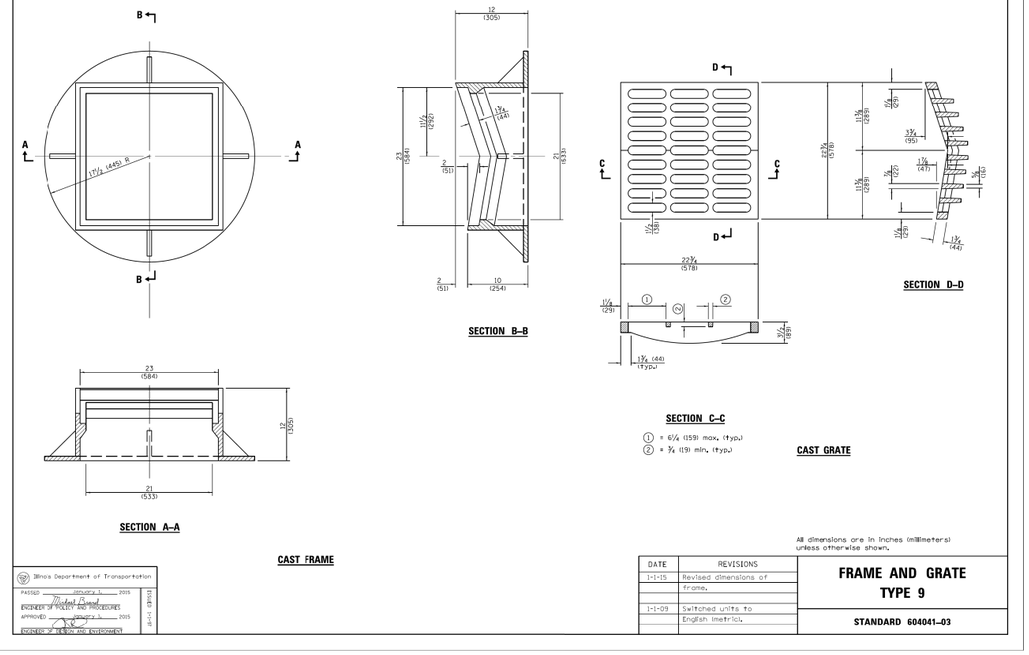

SECTION A–A

CAST FRAME

SECTION B–B

SECTION C–C
① = 6¼ (159) max. (typ.)
② = ¾ (19) min. (typ.)

SECTION D–D

CAST GRATE

All dimensions are in inches (millimeters) unless otherwise shown.

Illinois Department of Transportation
PASSED January 1, 2015
ENGINEER OF POLICY AND PROCEDURES Michael Brand
APPROVED January 1, 2015
ENGINEER OF BUREAU OF ENVIRONMENT
STANDARD 604041-03

DATE	REVISIONS
1-1-15	Revised dimensions of frame.
1-1-09	Switched units to English (metric).

FRAME AND GRATE TYPE 9

STANDARD 604041–03

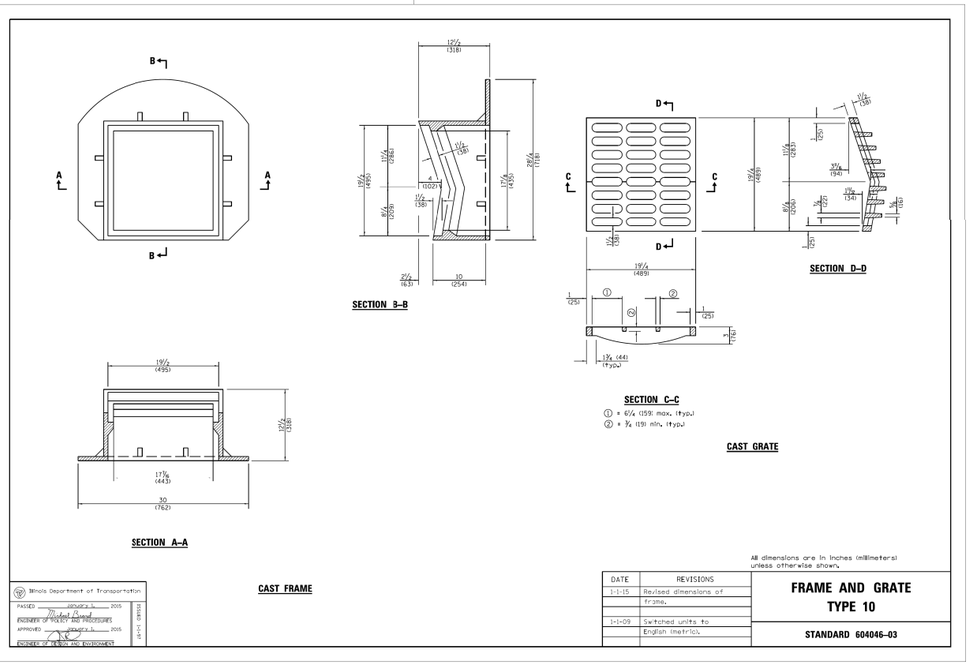

SECTION A–A

CAST FRAME

SECTION B–B

SECTION C–C
① = 6¼ (159) max. (typ.)
② = ¾ (19) min. (typ.)

SECTION D–D

CAST GRATE

All dimensions are in inches (millimeters) unless otherwise shown.

Illinois Department of Transportation
PASSED January 1, 2015
ENGINEER OF POLICY AND PROCEDURES Michael Brand
APPROVED January 1, 2015
ENGINEER OF BUREAU OF ENVIRONMENT
STANDARD 604046-03

DATE	REVISIONS
1-1-15	Revised dimensions of frame.
1-1-09	Switched units to English (metric).

FRAME AND GRATE TYPE 10

STANDARD 604046–03

DESIGN:				
DRAWN:				
CHECKED:				
APPROVED: DF				
DATE: 11/29/2017				
SCALE:				
FILE:	NO.	BY	DATE	DESCRIPTION
	REVISIONS			

KEY PLAN:

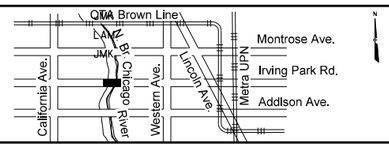

CHICAGO DEPARTMENT OF TRANSPORTATION

BOWMAN, BARRETT & ASSOCIATES INC.
CONSULTING ENGINEERS
Chicago, Illinois
312.228.0100
www.bbandainc.com

W. IRVING PARK ROAD AT NORTH BRANCH CHICAGO RIVER

STANDARD DETAILS

PROJECT NO. E-5-038

DRAWING NO. SD–6

CONTRACT NO. XXXXX

...\E5038-sht-std-6.dgn
11/29/2017 1:41:23 PM

TOTAL SHEETS	SHEET NO.
184	80

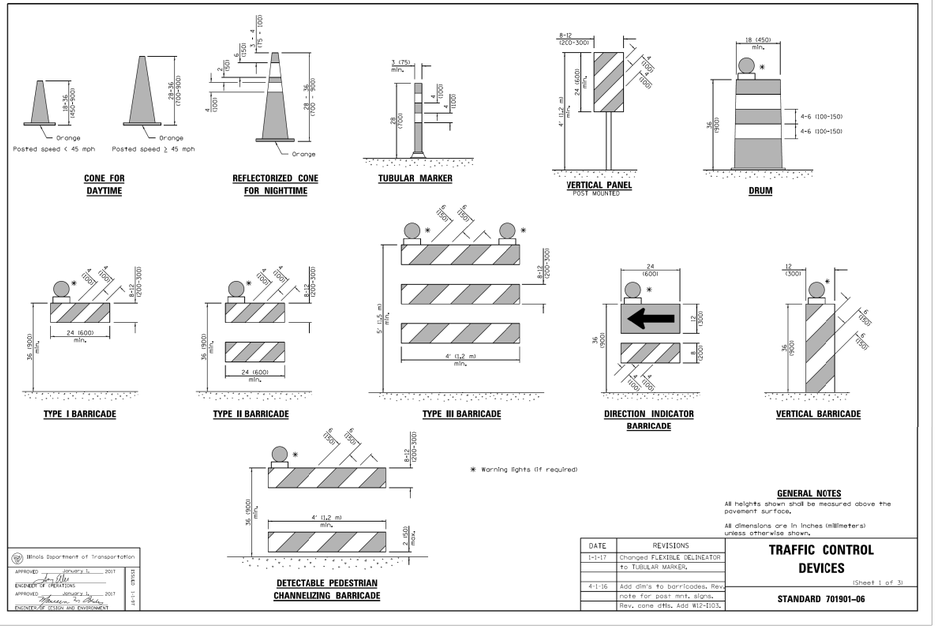

CONE FOR DAYTIME

REFLECTORIZED CONE FOR NIGHTTIME

TUBULAR MARKER

VERTICAL PANEL POST MOUNTED

DRUM

TYPE I BARRICADE

TYPE II BARRICADE

TYPE III BARRICADE

DIRECTION INDICATOR BARRICADE

VERTICAL BARRICADE

DETECTABLE PEDESTRIAN CHANNELIZING BARRICADE

✳ Warning lights (if required)

GENERAL NOTES

All heights shown shall be measured above the pavement surface.

All dimensions are in inches (millimeters) unless otherwise shown.

Illinois Department of Transportation
APPROVED January 3, 2017 — ENGINEER OF OPERATIONS
APPROVED January 3, 2017 — ENGINEER OF POLICY AND PROCEDURES

DATE	REVISIONS
1-1-17	Changed FLEXIBLE DELINEATOR to TUBULAR MARKER.
4-1-16	Add dim's to barricades. Rev note for post mnt. signs. Rev. cone dim. Add W12-1103.

TRAFFIC CONTROL DEVICES

(Sheet 1 of 3)

STANDARD 701901-06

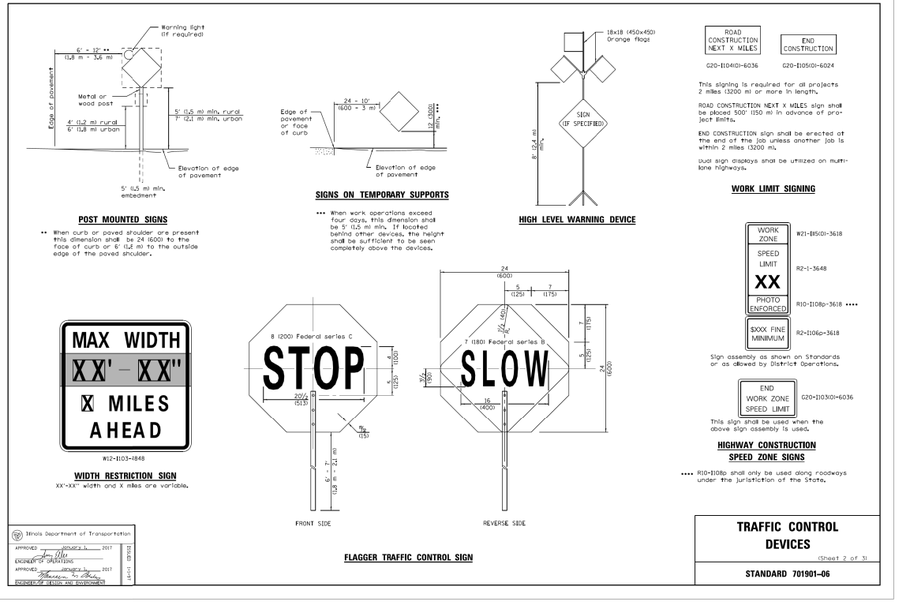

POST MOUNTED SIGNS

•• When curb or paved shoulder are present this dimension shall be 24 (600) to the face of curb or 6' (1,8 m) to the outside edge of the paved shoulder.

SIGNS ON TEMPORARY SUPPORTS

••• When work operations exceed four days, this dimension shall be 5' (1,5 m) min. If located behind other devices, the height shall be sufficient to be seen completely above the devices.

HIGH LEVEL WARNING DEVICE

WIDTH RESTRICTION SIGN

XX'-XX" width and X miles are variable.

FLAGGER TRAFFIC CONTROL SIGN

ROAD CONSTRUCTION NEXT X MILES — G20-E1041(I)-6036

END CONSTRUCTION — G20-E1051(I)-6024

This signing is required for all projects 2 miles (3200 m) or more in length.

ROAD CONSTRUCTION NEXT X MILES sign shall be placed 500' (150 m) in advance of project limits.

END CONSTRUCTION sign shall be erected at the end of the job unless another job is within 2 miles (3200 m).

Dual sign displays shall be utilized on multi-lane highways.

WORK LIMIT SIGNING

WORK ZONE / SPEED LIMIT XX / PHOTO ENFORCED — R10-I108(I)-3618 ••••

$XXX FINE MINIMUM — R2-I106(I)-3618

W21-B850(I)-3618

R2-1-3648

Sign assembly as shown on Standards or as allowed by District Operations.

END WORK ZONE SPEED LIMIT — G20-I1030(I)-6036

This sign shall be used when the above sign assembly is used.

HIGHWAY CONSTRUCTION SPEED ZONE SIGNS

•••• R10-I108p shall only be used along roadways under the jurisdiction of the State.

Illinois Department of Transportation
APPROVED January 3, 2017 — ENGINEER OF OPERATIONS
APPROVED January 3, 2017 — ENGINEER OF HIGHWAY ADMINISTRATION

TRAFFIC CONTROL DEVICES

(Sheet 2 of 3)

STANDARD 701901-06

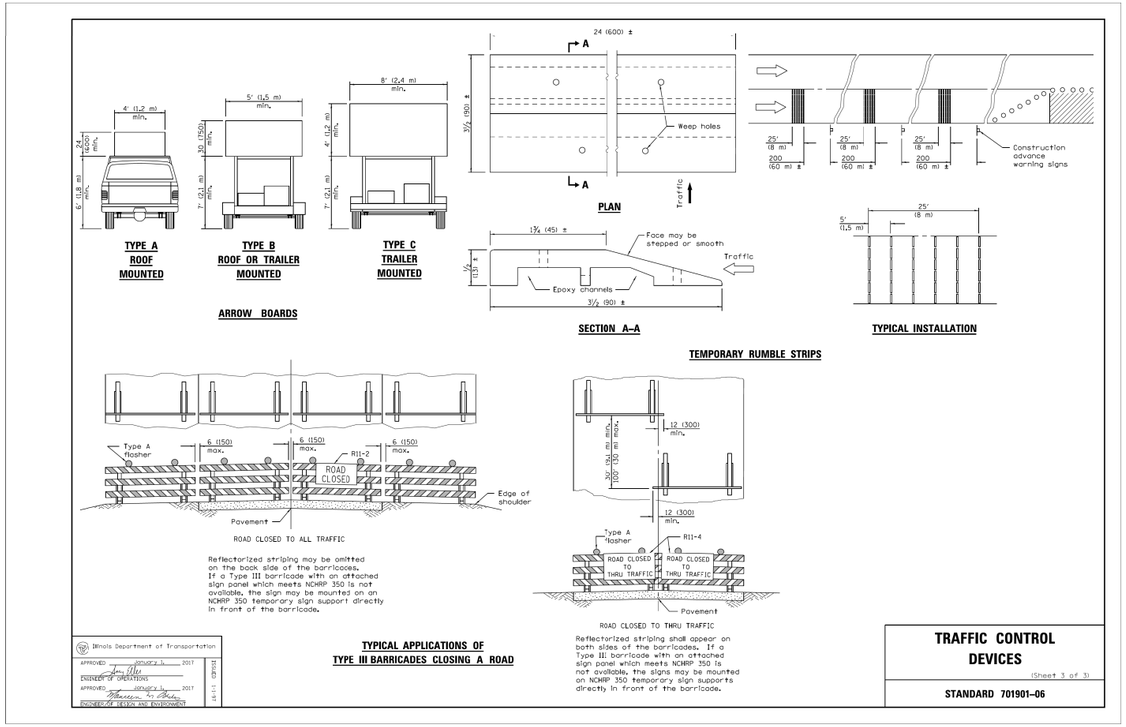

TYPE A ROOF MOUNTED

TYPE B ROOF OR TRAILER MOUNTED

TYPE C TRAILER MOUNTED

ARROW BOARDS

PLAN

SECTION A–A

TYPICAL INSTALLATION

TEMPORARY RUMBLE STRIPS

TYPICAL APPLICATIONS OF TYPE III BARRICADES CLOSING A ROAD

Illinois Department of Transportation
APPROVED January 3, 2017 — ENGINEER OF OPERATIONS
APPROVED January 3, 2017 — ENGINEER OF TRAFFIC AND ENVIRONMENT

TRAFFIC CONTROL DEVICES

(Sheet 3 of 3)

STANDARD 701901-06

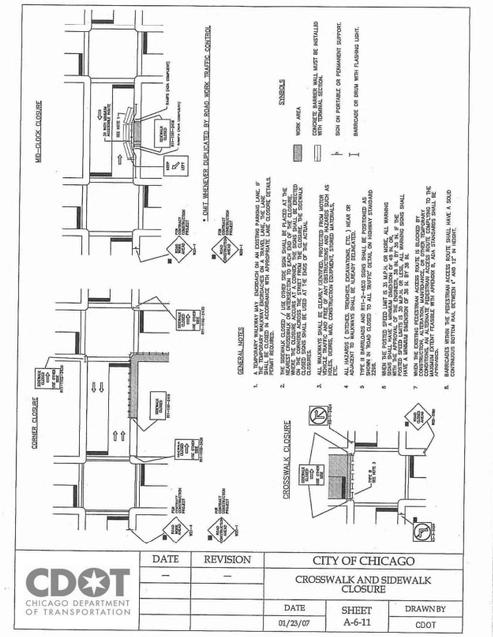

DESIGN:				
DRAWN:				
CHECKED:				
APPROVED: DF				
DATE: 11/29/2017				
SCALE:				
FILE:	NO.	BY	DATE	DESCRIPTION
	REVISIONS			

KEY PLAN:

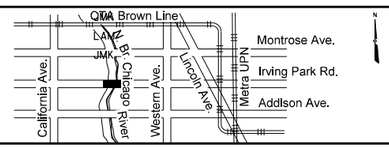

CDOT CHICAGO DEPARTMENT OF TRANSPORTATION

BOWMAN, BARRETT & ASSOCIATES INC.
CONSULTING ENGINEERS
Chicago, Illinois
312.228.0100
www.bbandainc.com

W. IRVING PARK ROAD AT NORTH BRANCH CHICAGO RIVER

STANDARD DETAILS

PROJECT NO. E-5-038

DRAWING NO. SD–7

CONTRACT NO. XXXXX

11/29/2017 1:41:51 PM ...\E5038-sht-std-7.dgn

TOTAL SHEETS	SHEET NO.
184	81

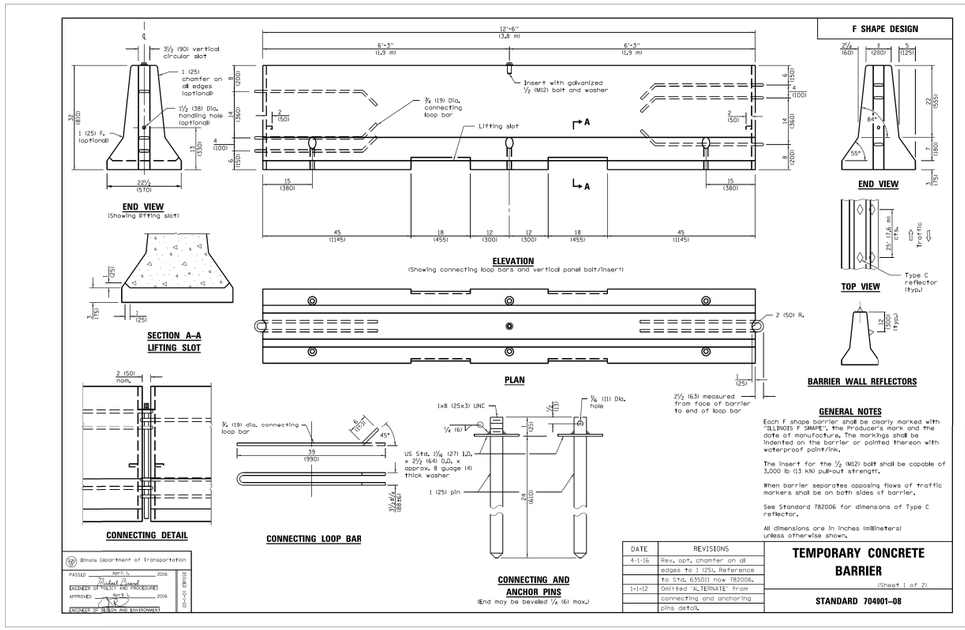

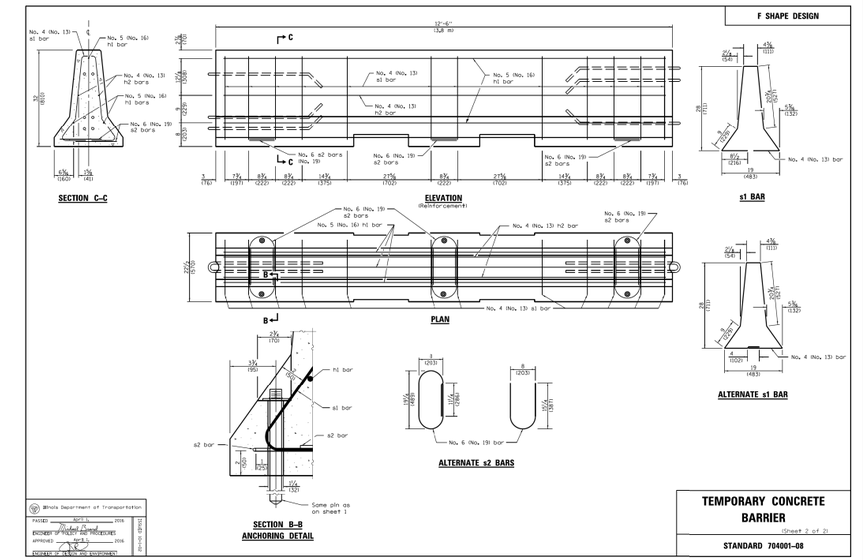

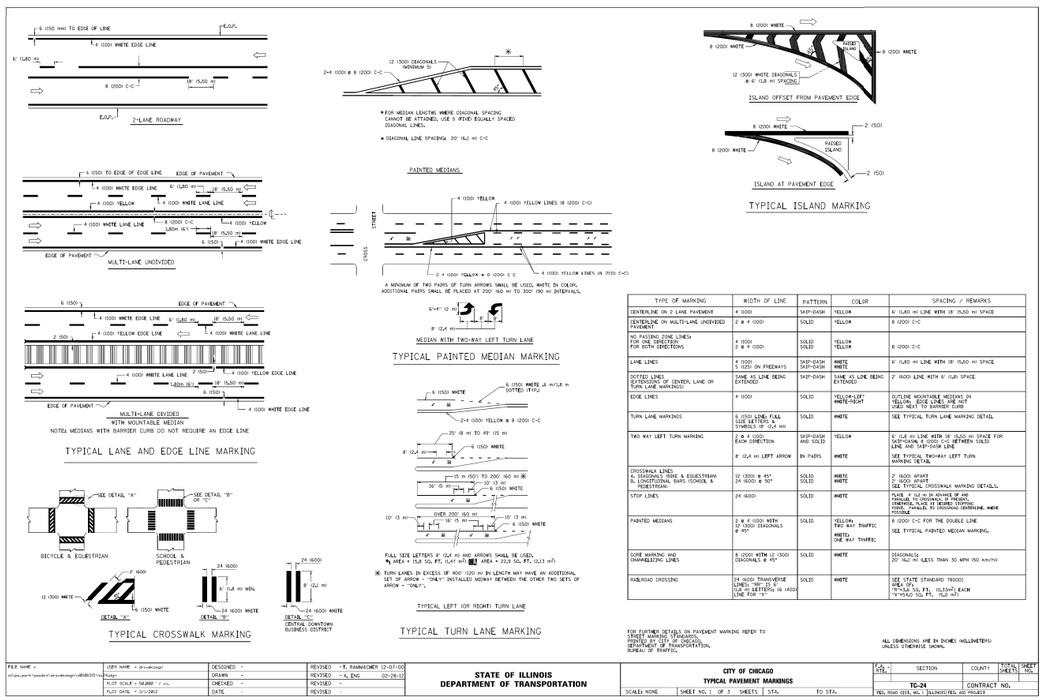

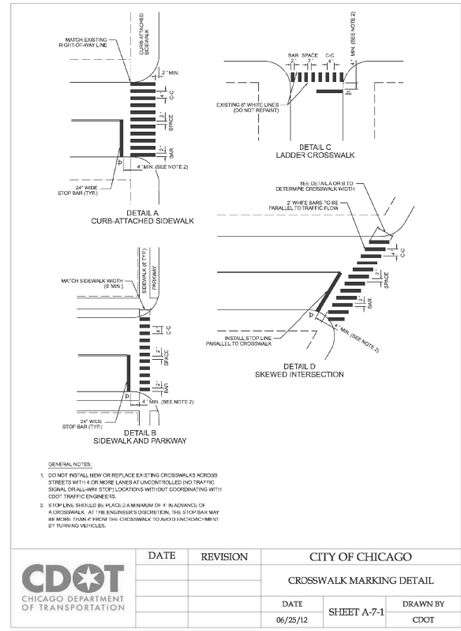

DESIGN:				
DRAWN:				
CHECKED:				
APPROVED: DF				
DATE: 11/29/2017				
SCALE:				
FILE:	NO.	BY	DATE	DESCRIPTION
	REVISIONS			

KEY PLAN:

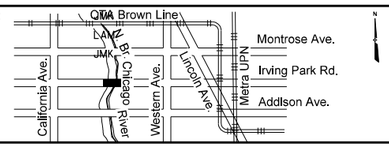

CDOT CHICAGO DEPARTMENT OF TRANSPORTATION

BOWMAN, BARRETT & ASSOCIATES INC.
CONSULTING ENGINEERS
Chicago, Illinois
312.228.0100
www.bbandainc.com

W. IRVING PARK ROAD AT NORTH BRANCH CHICAGO RIVER

STANDARD DETAILS

PROJECT NO. E-5-038
DRAWING NO. SD–8
CONTRACT NO. XXXXX

11/29/2017 1:42:21 PM ...\E5038-sht-std-8.dgn

TOTAL SHEETS	SHEET NO.
184	82

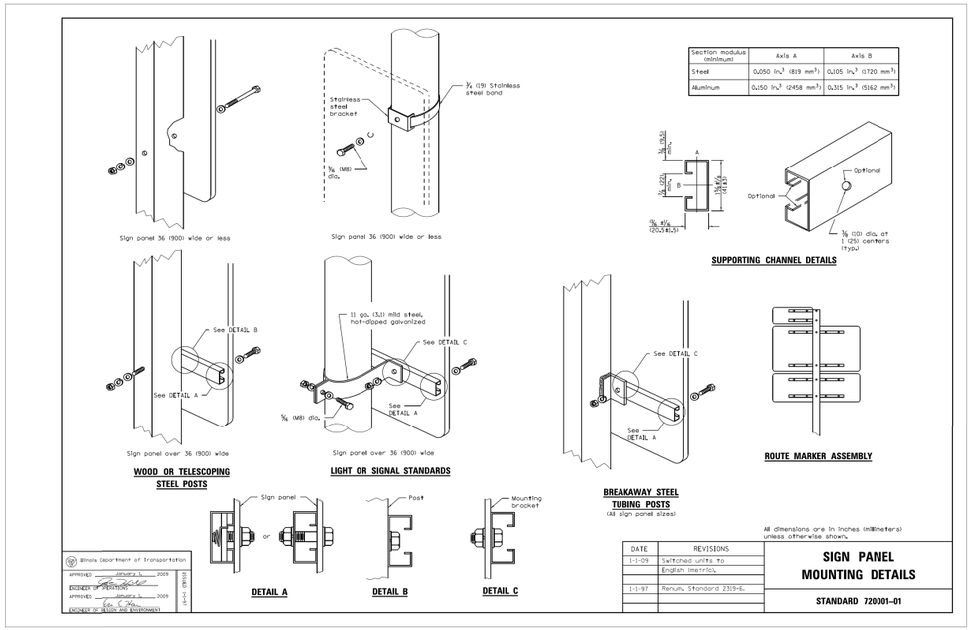

Section modulus (minimum)	Axis A	Axis B
Steel	0.050 in^3 (819 mm^3)	0.105 in^3 (1720 mm^3)
Aluminum	0.150 in^3 (2458 mm^3)	0.315 in^3 (5162 mm^3)

All dimensions are in inches (millimeters) unless otherwise shown.

Illinois Department of Transportation
APPROVED _____ January 1, 2009 — DIRECTOR OF OPERATIONS
APPROVED _____ January 1, 2009 — ENGINEER OF BUREAU OF DESIGN AND ENVIRONMENT
ISSUED 1-1-09

DATE	REVISIONS
1-1-09	Switched units to English (metric).
1-1-97	Renum. Standard 2319-6.

SIGN PANEL MOUNTING DETAILS

STANDARD 720301-01

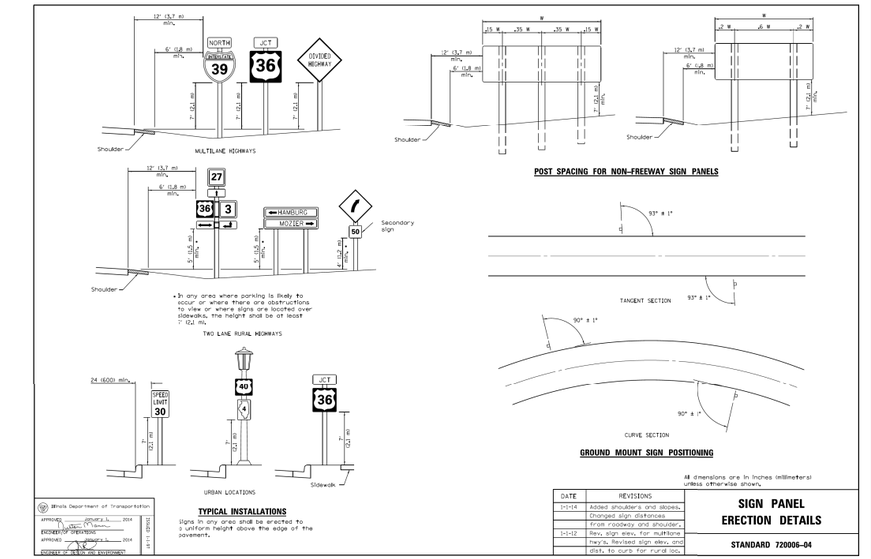

All dimensions are in inches (millimeters) unless otherwise shown.

Illinois Department of Transportation
APPROVED _____ January 1, 2014 — DIRECTOR OF OPERATIONS
APPROVED _____ January 1, 2014 — ENGINEER OF BUREAU OF DESIGN AND ENVIRONMENT
ISSUED 1-1-14

DATE	REVISIONS
1-1-14	Added shoulders and slopes, Changed sign distances from roadway and shoulder.
1-1-12	Rev. sign elev. for multilane hwys. Revised sign elev. and dist. to curb for rural acc.

SIGN PANEL ERECTION DETAILS

STANDARD 720006-04

REGULATORY TRAFFIC SIGNS
(CHICAGO STYLE)

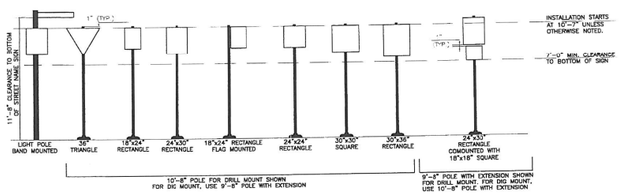

TYPICAL LAYOUT
NOT TO SCALE

WARNING AND SCHOOL SIGNS
(CHICAGO STYLE)

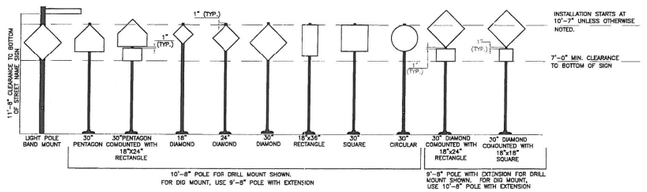

TYPICAL LAYOUT
NOT TO SCALE

DESIGN:				
DRAWN:				
CHECKED:				
APPROVED: DF				
DATE: 11/29/2017				
SCALE:				
FILE:	NO.	BY	DATE	DESCRIPTION
	REVISIONS			

KEY PLAN:

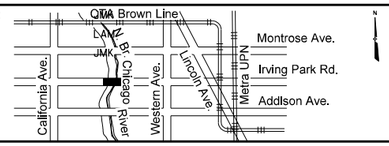

CDOT
CHICAGO DEPARTMENT OF TRANSPORTATION

BOWMAN, BARRETT & ASSOCIATES INC.
CONSULTING ENGINEERS
Chicago, Illinois
312.228.0100
www.bbandainc.com

W. IRVING PARK ROAD AT NORTH BRANCH CHICAGO RIVER

STANDARD DETAILS

PROJECT NO. E-5-038

DRAWING NO. SD–9

CONTRACT NO. XXXXX

11/29/2017 1:42:51 PM ...\E5038-sht-std-9.dgn

TOTAL SHEETS	SHEET NO.
184	83

STREET LIGHTING GENERAL NOTES

1. IT IS THE RESPONSIBILITY OF THE CONTRACTOR TO ASCERTAIN EXISTING FIELD CONDITIONS BEFORE BIDDING ON THIS PROJECT, SPECIFICALLY AS THEY RELATE TO LUMP SUM ITEMS.

2. ALL NEW CONDUITS, MANHOLES, HANDHOLES, JUNCTION BOXES, AND APPURTENANCES ARE LOCATED DIAGRAMMATICALLY ON THE PLANS UNLESS NOTED OTHERWISE. THE ACTUAL LOCATION IN THE FIELD SHALL MEET WITH APPROVAL OF THE COMMISSIONER.

3. THE ELECTRICAL WORK SHALL BE PERFORMED IN ACCORDANCE WITH:

   - NATIONAL ELECTRICAL SAFETY CODE AND THE CHICAGO ELECTRICAL CODE,
   - STANDARD SPECIFICATIONS FOR ROAD AND BRIDGE CONSTRUCTION,
   - STANDARDS OF THE DIVISION OF ELECTRICAL OPERATIONS AND APPLICABLE ORGANIZATIONS LISTED IN ARTICLE 101.01,
   - CDOT SPECIFICATIONS.

4. PRIOR TO THE INSTALLATION OF NEW CONDUITS, JUNCTION BOXES, LIGHTING STANDARD FOUNDATIONS AND APPURTENANCES, THE CONTRACTOR SHALL DETERMINE THE EXACT LOCATION OF EXISTING LIGHTING CONDUITS, CABLES AND UNDERGROUND UTILITIES.

5. ELECTRICAL MATERIALS SHALL BE NEW AND OF THE TYPE AND KIND APPROVED BY THE FOLLOWING ORGANIZATIONS:

   - NATIONAL ELECTRICAL MANUFACTURERS ASSOCIATION
   - INSTITUTE OF ELECTRICAL AND ELECTRONIC ENGINEERS
   - AMERICAN ASSOCIATION OF STATE HIGHWAY AND TRANSPORTATION OFFICIALS
   - U.S. DEPARTMENT OF TRANSPORTATION
   - UNDERWRITERS LABORATORIES, INC.
   - AMERICAN NATIONAL STANDARDS INSTITUTE

6. CABLE INSTALLATION FROM LIGHTING CONTROL CABINET TO LIGHT STANDARDS SHALL BE CONTINUOUS. SPLICING OF THE CABLES WILL BE PERMITTED ONLY IN THE BASE OF THE LIGHT STANDARDS AND ABOVE GROUND JUNCTION BOXES.

7. PROPOSED CONDUIT INSTALLATIONS SHALL BE FIELD ADJUSTED, AS NECESSARY TO AVOID CONFLICT WITH SEWER DRAINS AND OTHER UTILITIES.

8. WHERE MULTIPLE CONDUITS ADJACENT TO EACH OTHER ARE INSTALLED IN A COMMON TRENCH, TRENCH AND BACKFILL FOR ELECTRICAL WORK WILL NOT BE PAID FOR EACH CONDUIT BUT WILL BE PAID FOR THE LENGTH OF THE COMMON TRENCH ONLY.

9. THE GROUND RODS FOR MANHOLES, SERVICES, AND REQUIRED GROUNDING OF EQUIPMENT SHALL BE CONSIDERED INCLUDED WITH THE RELATED PAY ITEM. NO EXTRA COMPENSATION WILL BE ALLOWED FOR GROUND RODS AND RELATED INSTALLATION.

10. THE CONTRACTOR SHALL FURNISH AND INSTALL LUMINAIRES IN ACCORDANCE WITH THE LUMINAIRE SUPPLIER RECOMMENDATIONS AND IN ACCORDANCE WITH THE SPECIFICATIONS. THE CONTRACTOR SHALL COORDINATE THE LAMP TYPE, VOLTAGE AND WATTAGE WITH THE LUMINAIRE SUPPLIER. THE COST OF THE WORK AND MATERIAL SHALL BE INCLUDED IN THE LUMINAIRE PAY ITEM. SEPARATE PAYMENT WILL NOT BE MADE.

11. ALL LUMINAIRE OPTICS SHALL BE ORIENTATED WITH THE LAMPS 0 DEGREES PERPENDICULAR TO THE ROADWAY UNLESS OTHERWISE INDICATED OR DIRECTED BY THE COMMISSIONER. THIS WORK SHALL BE CONSIDERED INCLUDED IN THE APPLICABLE LUMINAIRES PAY ITEMS. SEPARATE PAYMENT WILL NOT BE MADE.

12. PROPOSED FOUNDATION LOCATIONS ARE MEASURED FROM THE FACE OF CURB TO THE CENTER OF FOUNDATION.

13. EXISTING STREET LIGHTING SHALL BE MAINTAINED UNTIL THE NEW LIGHTING IS FULLY OPERATIONAL.

14. THE CONTRACTOR SHALL PERFORM THE RESISTANCE TEST PRIOR TO ENERGIZING THE CIRCUIT.

15. THE CONTRACTOR SHALL BE RESPONSIBLE FOR COORDINATING ELECTRICAL WORK WITH OTHER TRADES, WHERE APPLICABLE.

16. DAMAGE TO ANY EXISTING STREET LIGHTING EQUIPMENT DUE TO CONSTRUCTION ACTIVITIES SHALL BE THE RESPONSIBILITY OF THE CONTRACTOR. THE EQUIPMENT SHALL BE REPLACED OR REPAIRED AS DIRECTED BY THE ENGINEER WITH MATERIAL EQUAL OR BETTER THAN THE EXISTING MATERIAL.

17. ALL UNPAVED AREAS DAMAGED DURING CONSTRUCTION SHALL BE RESTORED TO THE ORIGINAL CONDITIONS. UNLESS OTHERWISE DIRECTED BY THE ENGINEER. GRASSY AREAS WHICH WERE ORIGINALLY SODDED SHALL BE RE-SODDED.

18. THE CITY OF CHICAGO LIGHT POLES, MAST ARMS, AND LUMINAIRES SHALL BE REMOVED BY THE CONTRACTOR AS INDICATED ON THE PLANS AND AS DIRECTED BY THE ENGINEER. THE CONTRACTOR SHALL COORDINATE THE DELIVERY OF THESE EQUIPMENT WITH THE CITY OF CHICAGO DIVISION OF ELECTRICAL OPERATIONS. THE COST OF DELIVERING THE LIGHT POLES, MAST ARMS, AND LUMINAIRES SHALL BE IN THIS CONTRACT UNIT PRICE FOR THE REMOVAL OF THE MENTIONED ITEMS. NO ADDITIONAL COST WILL BE ALLOWED.

19. THE CONTRACTOR MUST PROVIDE A MINIMUM HORIZONTAL CLEARANCE OF 36" BETWEEN ALL PROPOSED UNDERGROUND CONDUITS AND EXISTING WATER MAINS. A MINIMUM HORIZONTAL CLEARANCE OF 60" MUST BE PROVIDED FOR WATER MAIN OF SIZE LARGER THAN 12". A MINIMUM VERTICAL CLEARANCE OF 18" MUST BE PROVIDED FOR ALL PROPOSED UNDERGROUND CONDUITS CROSSING OVER EXISTING WATER MAINS.

20. THE CONTRACTOR MUST PROVIDE A MINIMUM HORIZONTAL CLEARANCE OF 60" (EDGE TO EDGE) BETWEEN PROPOSED POLE FOUNDATIONS, MANHOLES/HANDHOLES AND EXISTING WATER MAIN.

21. THE CONTRACTOR MUST PROVIDE A MINIMUM HORIZONTAL CLEARANCE OF 36" BETWEEN ALL PROPOSED UNDERGROUND CONDUITS AND EXISTING GAS LINES AND A MINIMUM VERTICAL CLEARANCE OF 18" FOR ALL UNDERGROUND CONDUITS CROSSING OVER EXISTING GAS LINES OF SIZE 16" DIAMETER OR SMALLER, AND A MINIMUM VERTICAL CLEARANCE OF 24" FOR GAS LINES OF SIZE 18" DIAMETER OR LARGER, HIGH PRESSURE LINES, AND CONTROL LINES.

...\E5038-sht_elecdghtng1.dgn
11/29/2017 1:43:17 PM

DESIGN: RAS				
DRAWN: RAS				
CHECKED: MKR				
APPROVED:				
DATE: 11/29/2017				
SCALE: NTS				
FILE:	NO.	BY	DATE	DESCRIPTION
	REVISIONS			

CDOT
CHICAGO DEPARTMENT OF TRANSPORTATION

EJM ENGINEERING, INC.
411 South Wells Street Suite 1000
Chicago, Illinois 60607

W. IRVING PARK ROAD AT NORTH BRANCH CHICAGO RIVER

STREET LIGHTING GENERAL NOTES

PROJECT NO. E-5-038

DRAWING NO. E–1

CONTRACT NO. XXXXX

TOTAL SHEETS	SHEET NO.
184	84

PROPOSED	PRESENT	
○►	●►	SIGNAL, TRAFFIC 3 SECTION 1–WAY ADJUSTABLE, 12" OR AS NOTED
◄○►	◄●►	SIGNAL, TRAFFIC 3 SECTION 2–WAY ADJUSTABLE, 12" OR AS NOTED
*	*	SIGNAL OPTICALLY PROGRAMMED
DON'T WALK WALK	DON'T WALK WALK	SIGNAL, PEDESTRIAN, COUNTDOWN
DON'T WALK	DON'T WALK	SIGNAL, PEDESTRIAN, DON'T WALK/WALK
→	→	SIGNAL FACE ARROW, 12" COLOR AS NOTED
Y	Y	SIGNAL FACE, 1 SECTION YELLOW/GREEN ARROW DUAL INDICATION
◎	⊙	PUSH BUTTON, PEDESTRIAN
		SIGN,ILLUMINATED, WITH MESSAGE OR SYMBOL AS INDICATED
		MAST ARM, MONOTUBE, STEEL. SIZE AS INDICATED (SEE DWG. #870)
		MAST ARM, TRUSS, ALUMINUM. SIZE AS INDICATED
		CONTROLLER, TRAFFIC SIGNAL. PEDESTAL OR BASE MOUNTED AS INDICATED
⊠	⊠	CONTROLLER, STREET LIGHTING. PEDESTAL OR BASE MOUNTED. (DWG. 876 or 880)
		CONTROLLER,STREET LIGHTING. POLE MOUNTED (DWG. #11940)
	⊠	POLE, WOOD. COMMONWEALTH EDISON COMPANY, SERVICE
		POLE, CITY STEEL, ANCHOR BASE, 34'6",7 GA, 10" DI A. AND 15"B.C. 24"X7' FND. W/1 ¼" ANCHOR RODS DRG. #818.
		POLE, CITY STEEL, ANCHOR BASE, 34'–6", 3 GA. 10" DIA. AND 15" B.C. 24"X9' FND. W/1 ¼" ANCHOR RODS DRG. #818 (16',20'or 26'M.A.)
		POLE, CITY STEEL, ANCHOR BASE, 34"–6", 3GA., 11" DIA. AND 17 ¼" B.C. 30"X9' FND. W/1 ¼" ANCHOR RODS DRG. #816. (30' M.A.)
		POLE, CITY STEEL, ANCHOR BASE 34'–6", 3 GA. 12 ½" DIA. AND 16 ½"B.C. 30"X11' FND. W/1 ½" ANCHOR RODS DRG.#817. (35',40'or 44' M.A.)
		POLE, CITY STEEL, ANCHOR BASE, 32'–6", 3 GA. 10" DIA., WITH 3 GA. BAL. HSG. BASE AND 17 ¼" B. C. ON 30"X9' FND. W/ 11/4" ANCHOR RODS DRG. #816.
		POLE, CITY STEEL, ANCHOR BASE, 20',27'–6",29'–6", 7 GA. WITH STEEL BAL. HSG. BASE AND FND. W/10" D. B.C. AND 1" ANCHOR RODS DRG. #716.
		POLE,CITY STEEL, ANCHOR BASE, 20',27'–6",29'–6", 3 GA., WITH STEEL BAL. HSG. BASE AND FND. W/10" D. B.C. AND 1" ANCHOR RODS DWG.#719.
		POLE, CITY STEEL, ANCHOR BASE, 20',27'–6", 29'–6" 7 GA., AND ALUMINUM RESIDENTIAL DAVIT,AND FND. WITH 10" B.C. AND 1" ANCHOR RODSDWG#565 (CONCRETE) OR DWG.#936 (HELIX).
		POLE, CITY STEEL, ANCHOR BASE, 20',27'–6",29'–6" 3 GA.,AND FND. WITH 10" B.C. AND 1" ANCHOR RODS DWG. #565 (CONCRETE) OR DWG.#936 (HELIX).
		POLE , CITY STEEL, ANCHOR BASE, 32'–6", 7 GA., AND FND. WITH 11½" B.C. AND 1" ANCHOR RODS DWG. #753.
		POLE, CITY STEEL, ANCHR BASE, 32'–6", 3 GA., AND FND. WITH 11½" B.C. AND 1" ANCHOR RODS DWG. #753.
		POLE, CITY STEEL, ANCHOR BASE, 32'–6" 7 GA., ALUM. BHB AND FND. WITH 15" B.C.–24"X7' WITH 1" ANCHOR RODS DRG. #691.
		POLE, CITY STEEL, ANCHOR BASE, 32'–6", 3 GA., ALUM. BHB AND FND. WITH 15" B.C. 24"X 7' WITH 1" ANCHOR RODS DWG. #691.
		POLE, CITY ALUMINUM, WITH ROUND BAL. HSG. BASE, 25', 28', or 30' ON FND.WITH 14" B.C., ACQUIRED FROM CHICAGO PARK DISTRICT.
		POLE, CITY STEEL, EMBEDDED, 4"X 9"X 35' 7 GA., TAPERED TUBULAR. (DWG. #658)
		POLE, CITY STEEL, EMBEDDED, 4"X 9"X 35' 3 GA., TAPERED TUBULAR. (DWG. #658)
		POLE, CITY STEEL, EMBEDDED. (ACQUIRED FROM CTA)
		COLUMN,ELEVATED STRUCTURE
		POLE, WOOD. (SIZE AS NOTED)
		POLE, FOUNDATION WITH ELBOWS AS INDICATED.(SIZE AS NOTED)
		POLE, ORNAMENTAL OR OTHER, AS INDICATED ON THE PLANS
		RESIDENTIAL STREET LIGHTING CONTROLLER

PROPOSED	PRESENT	
		MANHOLE, 3'X4'X4' 24" F & C (DWG.#730) (A) 30" F & C (DWG#729) (B)
		MANHOLE, 4'X6'X6' 24" F & C (DWG.#732) (C) 30" F & C (DWG#733) (D)
		HANDHOLE, HEAVY DUTY, 36" I.D. (DWG.#866) 24" F & C (E). (DWG#871) 30" F & C (F)
		HANDHOLE, CIRCULAR WITH 24"FRAME & COVER,30"I.D. (#867) (G)
		FOUNDATION, CONTROLLER OR PEDESTAL, 13" B.C.,20"X5' (DWG. #709)
		FOUNDATION, TRAFFIC CONTROLLER DWG. #854 F.A. TERMINAL FND. DWG. #11972
P	P	FOUNDATION, TRAFFIC TYPE "P", BASE MOUNT. (DWG. #888)
		FOUNDATION,CONTROLLER STREET LIGHT ,SPECIAL, 100A & 200A. (DWG.#876 & # 880)
		FOUNDATION, TRANSCLOSURE; TRANSCLOSURE HOUSING. (DWG.# 583 & #891)
		CONTROLLER,UNDERPASS LIGHTING 120V. & 240V. (DWG. #860 & #861)
	E	MANHOLE, UTILITY, E=COMMONWEALTH EDISON; T=ILL BELL TEL.; G=PEOPLES GAS; W=CITY WATER; P=CHGO PARK DISTRICT; CTA=C.T.A; S= SEWER
J		JUNCTION BOX, IN PAVEMENT (DWG. #815)
		DETECTOR LOOP IN PAVEMENT
2D	2D	CONDUIT or P.V.C., NUMBER,SIZE & TYPE. (AS NOTED)
2D	2D	CONDUIT or P.V.C. ENCASED IN CONCRETE. (SECTION or NUMBER OF CONDUIT INDICATED
		LUMINAIRE, H.P.S.V. 400W LAMP, 240V, SEMI–CUTOFF
		LUMINAIRE, H.P.S.V. 400W LAMP, 240V, CUTOFF
		LUMINAIRE, H.P.S.V. 310W LAMP, 240V
		LUMINAIRE, H.P.S.V. 310W LAMP 240V, CUTOFF
		LUMINAIRE, H.P.S.V. 150W LAMP, 240V
		LUMINAIRE, H.P.S.V. 150W LAMP, 120V
		LUMINAIRE, H.P.S.V. 250W LAMP, 120V, (ALLEY LIGHT)
		LUMINAIRE, H.P.S.V. 250W LAMP, 120V
		LUMINAIRE, H.P.S.V. 400W LAMP, 240V, (FLOOD LIGHT)
T	T	TERMINAL, CABINET F.A. & P.C.
F	F	FIRE ALARM BOX, MOUNTED
F	F	FIRE ALARM BOX, POLE MOUNTED
PR	PR	CABLE, TRAFFIC SIGNAL, COMMUNICATION, 1–PAIR #14 SHIELDED, IN CONDUIT
2	2	CABLE, TRAFFIC SIGNAL POWER SUPPLY, 2/C– #4, 600 V. EPR. IN CONDUIT
III	III	CABLE, TRAFFIC SIGNAL POWER SUPPLY, 2 1/C–#2 or #1/0 600V. EPR IN CONDUIT
II	II	CABLE, TRAFFIC SIGNAL POWER SUPPLY, 2/C–#10 or #6, 600V NSRI, IN CONDUIT
VII	VII	CABLE, TRAFFIC SIGNAL, 7/C–#12 or #14, 600V, EPR IN CONDUIT
X	X	CABLE, TRAFFIC SIGNAL, 10/C–#12 600V. EPR IN CONDUIT
	XIV	CABLE, TRAFFIC SIGNAL, 14/C–#14, 600V. EPR IN CONDUIT
XIX	XIX	CABLE, TRAFFIC SIGNAL, 19/C–#12 600V, EPR IN CONDUIT
2N	2N	CABLE, STREET LIGHT, 2 1/C–#6, 600V. RINS IN PARKWAY
2NC	2NC	CABLE, STREET LIGHT, 2 1/C–#6, 600V. RINS IN CONDUIT
3TC	3TC	CABLE, STREET LIGHT, 2 1/C–#6 EPRN 600V. & 1 1/C–#8 GREEN, TRIPLEXED,IN CONDUIT
3NC	3NC	CABLE, STREET LIGHT, 3 1/C–#1/0, or #2/0, or #4, 600V. EPR IN CONDUIT
2W	2W	WIRE, STREET LIGHT, 2 1/C–#6, HDNS. AERIAL
3W	3W	WIRE, STREET LIGHT, 2 1/C–#6 & 1 1/C #8, HDNS. AERIAL
III	III	CABLE, STREET LIGHT AERIAL, 3 1/C–#4 or #2 SELF SUPPORTING, 600V EPR
W FA	W FA	WIRE, F.A. & P.C. AERIAL, 1/C–#10, NUMERAL DENOTES QUANTITY
PR	PR	CABLE, F.A. & P.C. AERIAL, W/ MESSENGER #19–(NUMBER OF PAIRS AS INDICATED)
PR 6 6	PR 6	CABLE, F.A. & P.C. AERIAL, SELF SUPPORTING, #19–(NUMBER OF PAIRS AS INDICATED)
37 PR	37 PR	CABLE, F.A. & P.C., IN CONDUIT, #19–(NUMBER OF PAIRS AS INDICATED)
		DOWNLIGHT ASSEMBLY. (DWG. #850)
		LIGHT, TRAFFIC SAFETY ISLAND
		FLASHING BEACON & DOWNLIGHT

C.M.H. LUMINAIRES

PROPOSED	PRESENT	
		LUMINAIRE, C.M.H. 315W LAMP, 240V
		LUMINAIRE, C.M.H. 315W LAMP, 240V, (FLOOD)
		LUMINAIRE, C.M.H. 210W LAMP, 240V
		LUMINAIRE, C.M.H. 140W LAMP, 240V
		LUMINAIRE, C.M.H. 140W LAMP, 120V, (ALLEY)
		LUMINAIRE, C.M.H. 90W LAMP, 240V
		LUMINAIRE, C.M.H. 90W LAMP, 240V (ACORN)
		LUMINAIRE, C.M.H. 60W LAMP, 240V (ACORN)

H.P.S.V. ORNAMENTAL LUMINAIRES

PROPOSED	PRESENT	
		310W PENDANT (240V)
		400W PENDANT (240V)
		250W PENDANT (240V)
		150W ACORN (120V)
		150W ACORN (240V)
		50W ACORN (240V)
		100W ACORN (240V)
		150W GLOBE (240V)
		100W GLOBE (240V)
		50W GLOBE (240V)

L.E.D. LUMINAIRES

PROPOSED	PRESENT	
		(400W HPSV EQUIVALENT), 240V
		(100W HPSV EQUIVALENT), 240V, ACORN
		(310W HPSV EQUIVALENT), 240V
		(100/150W HPSV EQUIVALENT), 240V ACORN
		(250W HPSV EQUIVALENT), 240V
		(50W HPSV EQUIVALENT), 240V, ACORN

F	01–08–14	ADDED LED LUMINAIRES A.VIEU
E	09–19–13	ADDED CMH LUMINAIRES A.VIEU
D	02–06–04	REVISED/REDRAW R.POOL/B.I.
C	04–01–02	REVISED/REDRAW R.POOL/B.I.
B	12–4–01	ADDED ORNAMENTAL SYMBOLS
A	8–6–96	REDRAWN
	DATE	REVISION

SUPERSEDES DWG. #

WORK ORDER NO. _____ DATE _____

COST ALLOCATION ACCOUNT _____

APPROPRIATION ACCOUNT { MATERIAL _____ / LABOR _____

STANDARD CODE FOR TRAFFIC SIGNALS/ STREET LIGHTING

CITY OF CHICAGO
DEPT. OF TRANSPORTATION
DIVISION OF ENGINEERING
ELECTRICAL SECTION

DRAFTSMAN:	CHIEF DRAFTSMAN:	ENGINEER:
R. IVY	R. CARTER	R. POOL/R.C/W.T.

SUPERVISING ENGINEER: ELEC. DESIGN ENGR.

ENGINEER OF ELECTRICITY:

GEN'L SUPT. OF CONSTRUCTION:

DEPUTY COMMISSIONER:

DWG. NO. 826

SIZE: 22" | 36" SCALE: NONE DATE: 09–19–13

DESIGN:	RAS			
DRAWN:	RAS			
CHECKED:	MKR			
APPROVED:				
DATE:	11/29/2017			
SCALE:	NTS			
FILE:	NO.	BY	DATE	DESCRIPTION
	REVISIONS			

CDOT CHICAGO DEPARTMENT OF TRANSPORTATION

EJM ENGINEERING, INC. 411 South Wells Street Suite 1000 Chicago, Illinois 60607

W. IRVING PARK ROAD AT NORTH BRANCH CHICAGO RIVER

STANDARD CODE FOR TRAFFIC SIGNALS/STREET LIGHTING

PROJECT NO. E-5-038

DRAWING NO. E–2

CONTRACT NO. XXXXX

...\E5038-sht_elecl ghtng2.dgn

11/29/2017 1:43:19 PM

TOTAL SHEETS	SHEET NO.
184	85

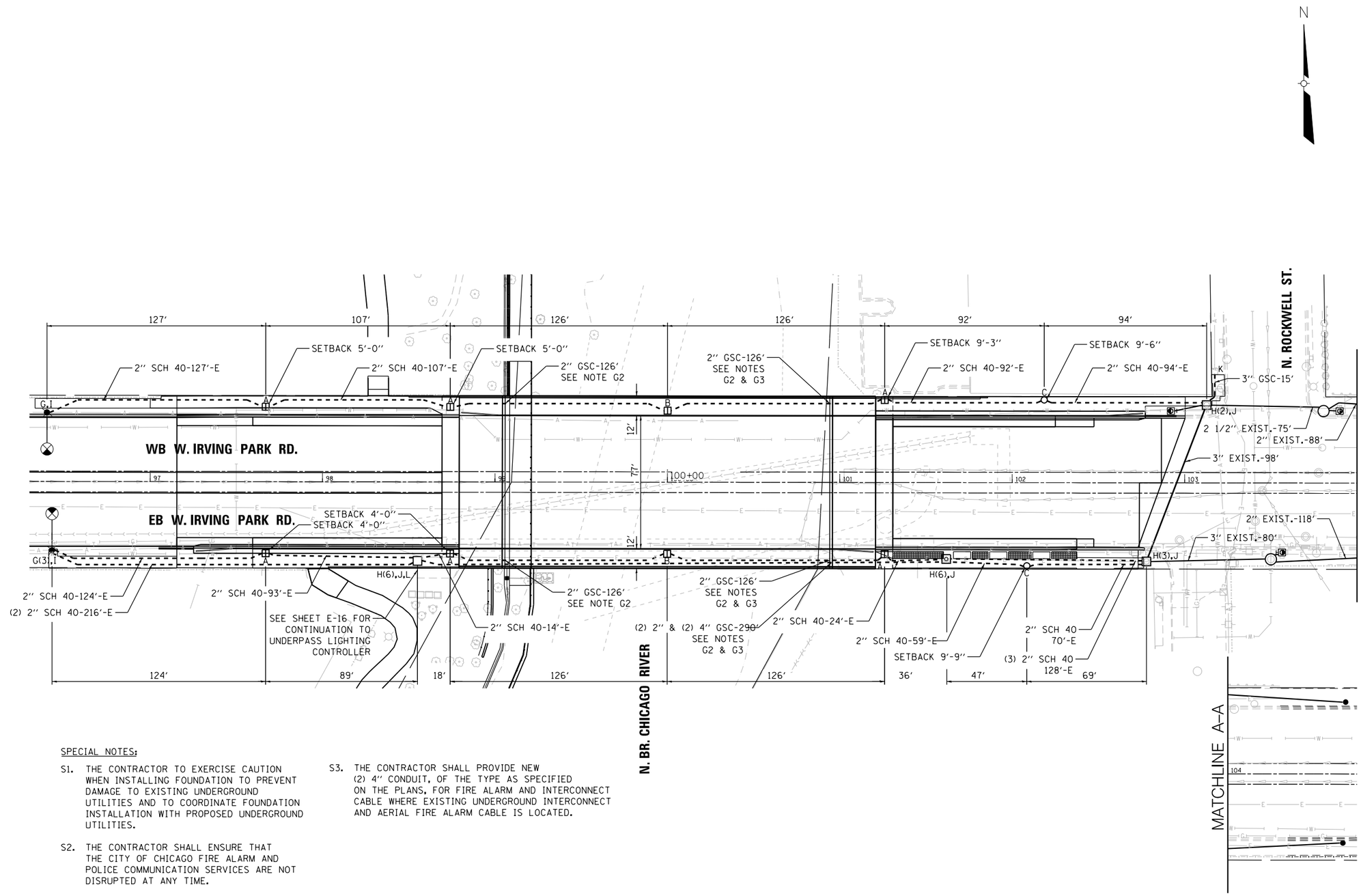

FOUNDATION AND CONDUIT PLAN LEGEND:

A - CONSTRUCT 28″ X 7′ CONCRETE FOUNDATION WITH 15″ BOLT CIRCLE AND 1 1/4″ ANCHOR RODS, AS PER DRAWING NO. 953.

B - SEE STRUCTURAL PLANS FOR POLE FOUNDATION DETAILS. THE COST OF THE FOUNDATION IS INCLUDED IN THE PRICE OF THE BRIDGE DECK.

C - CONSTRUCT 30″ X 7′ CONCRETE FOUNDATION WITH 15″ BOLT CIRCLE AND 1″ ANCHOR RODS, AS PER DRAWING NO. 956.

D - INSTALL HANDHOLE 30″ DIAMETER WITH 24″ FRAME AND COVER, AS PER DRAWING NO. 867.

E - INSTALL PVC SCHEDULE 40 CONDUIT IN TRENCH, SIZE AS NOTED. CONDUIT BELOW ROADWAYS OR DRIVEWAYS MUST BE SCHEDULE 80, AS NOTED.

F - INSTALL PVC SCHEDULE 80 CONDUIT, PUSHED, SIZE AS NOTED.

G - INSTALL 2″ STEEL CONDUIT RISER, SERVICE ENTRANCE HEAD, AND 2″ STEEL ELBOW ON EXISTING EMBEDDED POLE.

H - DRILL EXISTING MANHOLE. QUANTITY OF ″DRILL EXISTING MANHOLE″ AT EACH LOCATION IS SHOWN IN PARENTHESES.

I - EXISTING EMBEDDED POLE TO REMAIN

J - EXISTING MANHOLE TO REMAIN

K - INSTALL 100 AMP SERVICE PER DRAWING NO. 11925.

L - INSTALL GROUND ROD FOR UNDERPASS LIGHTING CONTROLLER. PRICE SHALL BE INCLUDED IN THE COST OF UNDERPASS LIGHTING CONTROLLER.

GENERAL NOTES:

G1. FOUNDATIONS TO BE SET AT MINIMUM 3′ FROM FACE OF CURB TO CENTER OF LIGHT POLE, UNLESS OTHERWISE NOTED. FOUNDATIONS LOCATED ON APPROACH SLAB TO BE SET AT MINIMUM 3′ FROM BACK OF SHOULDER TO CENTER OF LIGHT POLE.

G2. SEE SHEET E-6 FOR PVC SCHEDULE 40 CONDUIT IN TRENCH 2″ OR 4″ TO GALVANIZED STEEL CONDUIT ATTACHED TO STRUCTURE 2″ OR 4″ TRANSITION DETAIL. SEE STRUCTURAL PLANS FOR INSTALLATION DETAILS THROUGH ABUTMENT AND HANGER ASSEMBLY DETAILS.

G3. SEE SHEET E-6 FOR CONDUIT EXPANSION/ DEFLECTION FITTING DETAIL.

SPECIAL NOTES:

S1. THE CONTRACTOR TO EXERCISE CAUTION WHEN INSTALLING FOUNDATION TO PREVENT DAMAGE TO EXISTING UNDERGROUND UTILITIES AND TO COORDINATE FOUNDATION INSTALLATION WITH PROPOSED UNDERGROUND UTILITIES.

S2. THE CONTRACTOR SHALL ENSURE THAT THE CITY OF CHICAGO FIRE ALARM AND POLICE COMMUNICATION SERVICES ARE NOT DISRUPTED AT ANY TIME.

S3. THE CONTRACTOR SHALL PROVIDE NEW (2) 4″ CONDUIT, OF THE TYPE AS SPECIFIED ON THE PLANS, FOR FIRE ALARM AND INTERCONNECT CABLE WHERE EXISTING UNDERGROUND INTERCONNECT AND AERIAL FIRE ALARM CABLE IS LOCATED.

...\E5038-sht_elelghtng3.dgn
11/29/2017 1:43:31 PM

DESIGN:	RAS			
DRAWN:	RAS			
CHECKED:	MKR			
APPROVED:				
DATE:	11/29/2017			
SCALE:	1″ = 30′			
FILE:	NO.	BY	DATE	DESCRIPTION
	REVISIONS			

KEY PLAN:

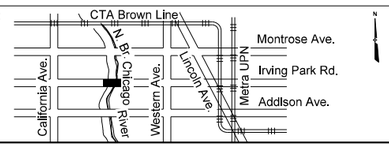

CDOT
CHICAGO DEPARTMENT OF TRANSPORTATION

EJM ENGINEERING, INC.
411 South Wells Street Suite 1000
Chicago, Illinois 60607

W. IRVING PARK ROAD AT NORTH BRANCH CHICAGO RIVER

STREET LIGHTING
FOUNDATION AND CONDUIT PLAN

CDOT
17–029

PROJECT NO.
E-5-038

DRAWING NO.
17–029

CONTRACT NO. XXXXX

TOTAL SHEETS	SHEET NO.
184	86

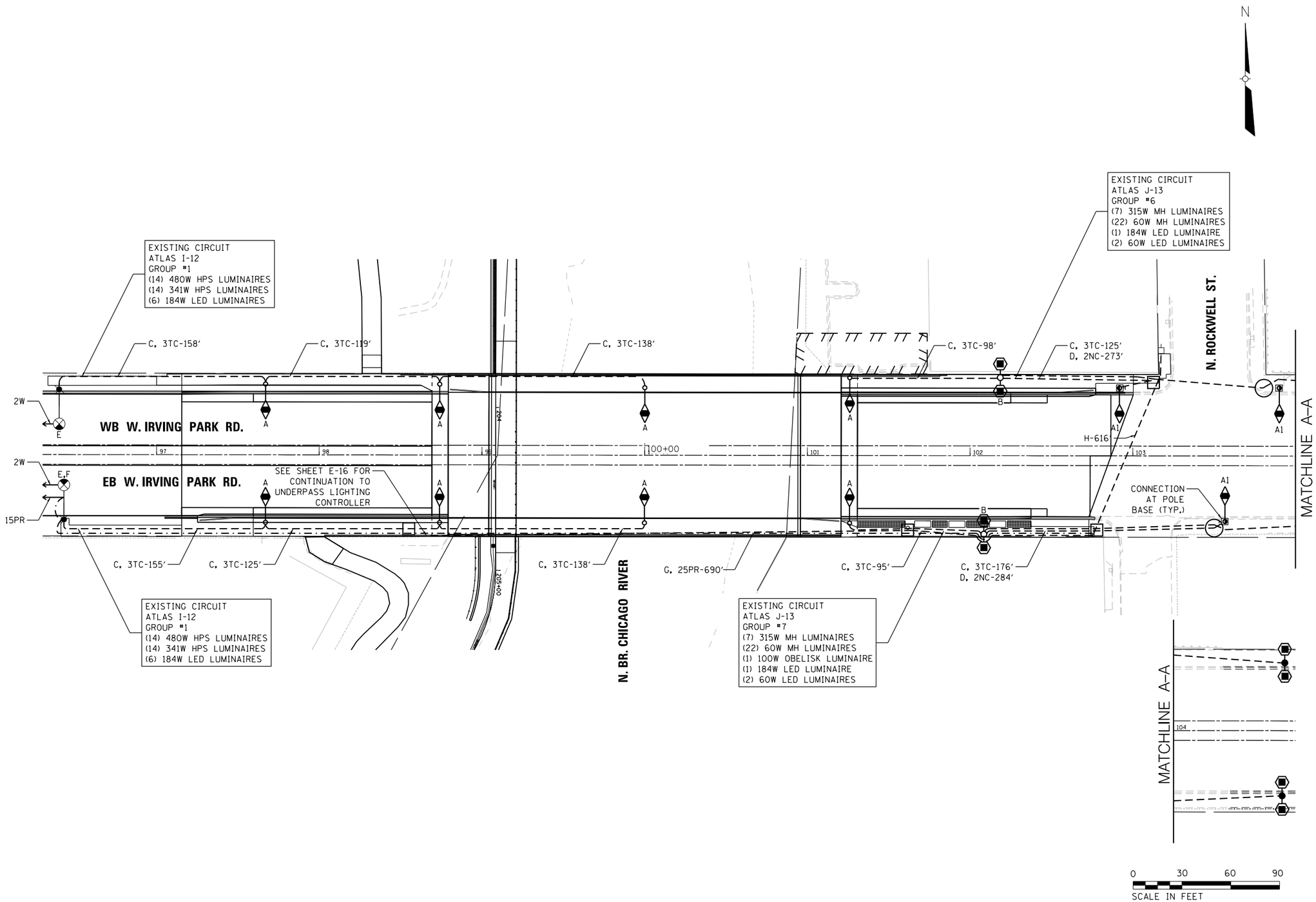

STREET LIGHTING INSTALLATION PLAN LEGEND:

A - INSTALL CHICAGO 2000 STREET LIGHT UNIT (184W LED LUMINAIRE), AS PER DRAWINGS NO. 930, 930A, 930B, 930C, AND 931

A1- INSTALL CHICAGO 2000 STREET LIGHT (184W LED LUMINAIRE) ONLY.

B - INSTALL ORNAMENTAL SHORT LOOP STREET LIGHT POLE (TWO LED LUMINAIRES), AS PER DRAWINGS NO. 911, 911A, 911B, AND 912

C - INSTALL STREET LIGHT CABLE, 2-1/C #6 & 1/C #8 GND IN CONDUIT

D - INSTALL RECEPTACLE CABLE, 2-1/C #6 IN CONDUIT, TO POWER FESTOON RECEPTACLE LOCATED AT EACH 60W LED ACORN LUMINAIRE PER SHORT LOOP POLE. CONTRACTOR SHALL IDENTIFY 120V 1-PAIR CABLE AND LABEL AS "120V FESTOON RECEPTACLE" AT EACH SHORT LOOP POLE, HANDHOLE, AND MANHOLE.

E - EXISTING EMBEDDED POLE TO REMAIN

F - INSTALL JUNCTION BOX, TSS-18

G - 25PR FIRE ALARM CABLE TO BE FURNISHED BY OEMC

H - INSTALL SERVICE CABLE 3/C NO. 2 IN CONDUIT

SPECIAL NOTES:

S1. INSTALLATION OF FIRE ALARM CABLE SHALL BE BY THE CONTRACTOR. OEMC TO FURNISH FIRE ALARM CABLE. OEMC WILL DISCONNECT EXISTING CABLE AND PROVIDE CONNECTION AND TERMINATIONS FOR TEMPORARY AND PERMANENT SERVICES.

S2. INSTALLATION OF THE INTERCONNECT CABLE SHALL BE BY THE CONTRACTOR. EXISTING INTERCONNECT CABLE DISCONNECTED BY OEMC AND COILED INTO EXISTING MANHOLE TO BE PULLED BACK TO COMED MANHOLE AT ROCKWELL ST. AND RECONNECTED BY OEMC FORCES.

...\E5038-sht_elecligthng4.dgn
11/29/2017 1:43:33 PM

DESIGN: RAS				
DRAWN: RAS				
CHECKED: MKR				
APPROVED:				
DATE: 11/29/2017				
SCALE: 1" = 30'				
FILE:	NO.	BY	DATE	DESCRIPTION
	REVISIONS			

KEY PLAN:

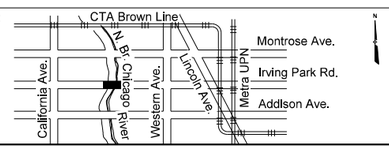

CDOT
CHICAGO DEPARTMENT OF TRANSPORTATION

EJM ENGINEERING, INC.
411 South Wells Street Suite 1000
Chicago, Illinois 60607

W. IRVING PARK ROAD AT NORTH BRANCH CHICAGO RIVER

STREET LIGHTING AND CABLE PLAN

CDOT
17-030

PROJECT NO.
E-5-038

DRAWING NO.
17-030

CONTRACT NO. XXXXX

TOTAL SHEETS	SHEET NO.
184	87

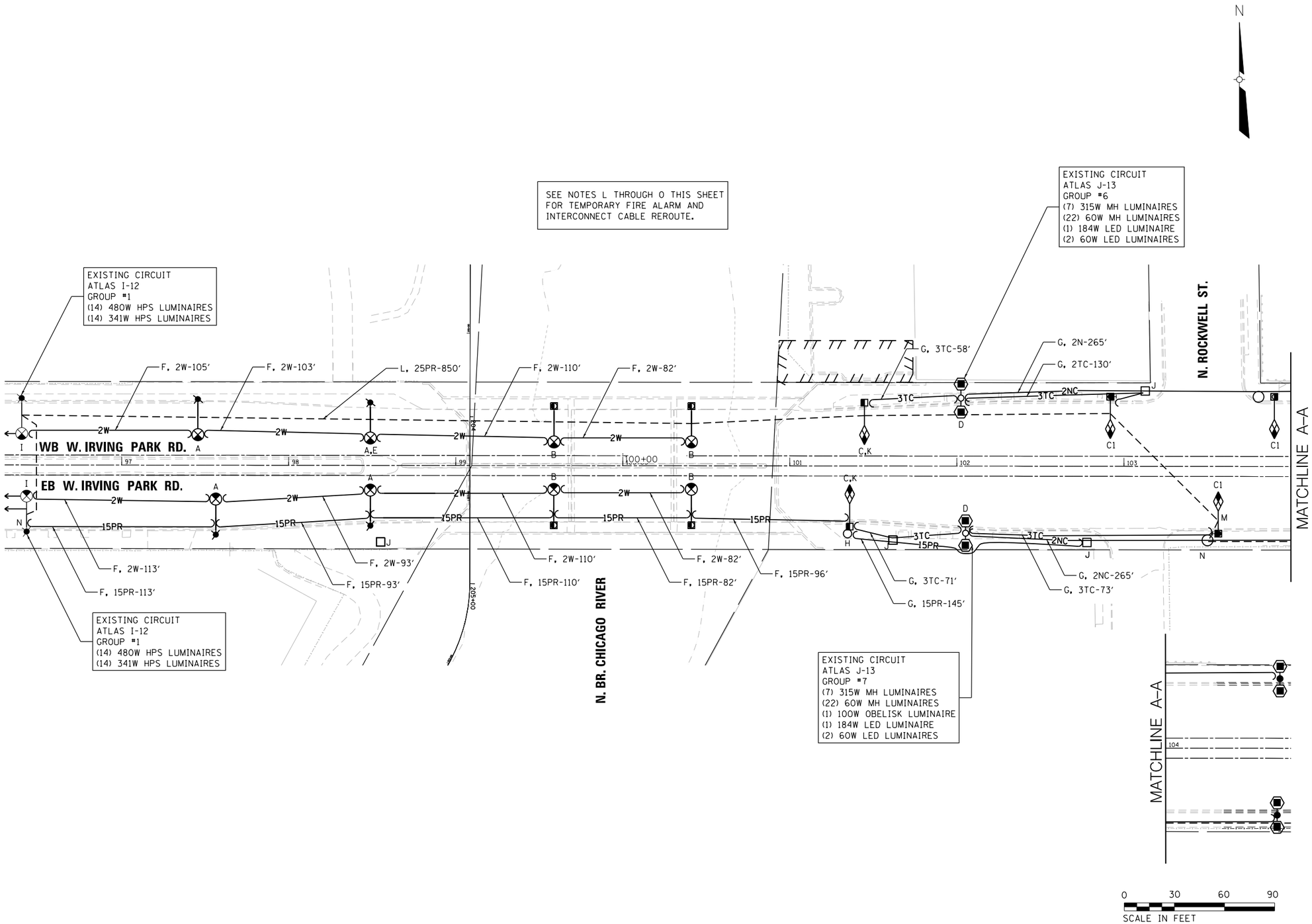

STREET LIGHTING REMOVAL LEGEND:

A - REMOVE EMBEDDED POLE WITH MAST ARM AND HPS LUMINAIRE

B - REMOVE POLE WITH MAST ARM AND HPS LUMINAIRE. FOUNDATION REMOVAL IS INCLUDED IN THE PRICE OF REMOVAL OF THE EXISTING BRIDGE STRUCTURE.

C - REMOVE POLE, POLE BASE, ARM, LUMINAIRE, MAST HEAD AND FINIAL. BREAKDOWN EXISTING FOUNDATION BELOW GRADE.

C1- REMOVE LUMINAIRE ONLY.

D - REMOVE ORNAMENTAL POLE, POLE BASE, AND LUMINAIRE. BREAKDOWN EXISTING FOUNDATION BELOW GRADE.

E - REMOVE FLOODLIGHT ATTACHED TO POLE.

F - REMOVE AERIAL CABLE AND ASSOCIATED EQUIPMENT

G - REMOVE ELECTRIC CABLE FROM CONDUIT

H - REMOVE EXISTING HANDHOLE FRAME AND COVER. BACKFILL HANDHOLE AND ABANDON.

I - EXISTING EMBEDDED POLE TO REMAIN

J - EXISTING MANHOLE TO REMAIN

K - REMOVE EXISTING HANGING BASKET ASSEMBLY AND RELOCATE TO NEW GATEWAY LIGHTING UNIT. THE COST OF RELOCATING THE ASSEMBLY IS INCLUDED IN THE PRICE OF THE NEW LIGHTING UNIT

L - INSTALL 25 PR TEMPORARY AERIAL F.A. CABLE AS SHOWN. CABLE TO BE PROVIDED BY OEMC. THIS WORK SHALL BE INCLUDED IN THE COST OF THE PAY ITEM "MAINTAIN EXISTING FIRE-ALARM AND INTERCONNECT CABLE".

M - REMOVE EXISTING GATEWAY POLE FINIAL AND INSTALL SERVICE ENTRANCE HEAD TO FACILITATE ENTRY OF F.A. CABLE INSIDE EXISTING POLE. THIS WORK SHALL BE INCLUDED IN THE COST OF THE PAY ITEM "MAINTAIN EXISTING FIRE-ALARM AND INTERCONNECT CABLE".

N - OEMC FORCES TO SPLICE TEMPORARY F.A. CABLE INTO EXISTING UNDERGROUND F.A. CABLE IN EXISTING MANHOLE. THIS WORK MUST BE COORDINATED WITH THE OFFICE OF EMERGENCY MANAGEMENT AND COMMUNICATIONS.

O - OEMC FORCES TO DISCONNECT FIBER OPTIC INTERCONNECT BACKBONE IN COMED MANHOLE AT ROCKWELL ST. CONTRACTOR TO PULL BACK CABLE TO EXISTING MANHOLE WEST OF BRIDGE. CABLE TO BE COILED AND STORED IN MANHOLE FOR RECONNECTION AFTER COMPLETION OF PROPOSED CONDUIT ATTACHED TO STRUCTURE ACROSS BRIDGE.

...\E5038-sht_elec\ghtng5.dgn
11/29/2017 1:43:36 PM

DESIGN: RAS				
DRAWN: RAS				
CHECKED: MKR				
APPROVED:				
DATE: 11/29/2017				
SCALE: 1" = 30'				
FILE:	NO.	BY	DATE	DESCRIPTION
	REVISIONS			

KEY PLAN:

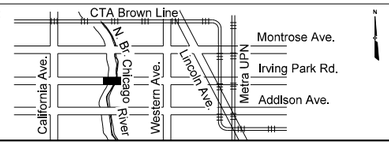

CDOT
CHICAGO DEPARTMENT OF TRANSPORTATION

EJM ENGINEERING, INC.
411 South Wells Street Suite 1000
Chicago, Illinois 60607

W. IRVING PARK ROAD AT NORTH BRANCH CHICAGO RIVER

STREET LIGHTING REMOVAL PLAN

CDOT
17-031

PROJECT NO.
E-5-038

DRAWING NO.
17-031

CONTRACT NO. XXXXX

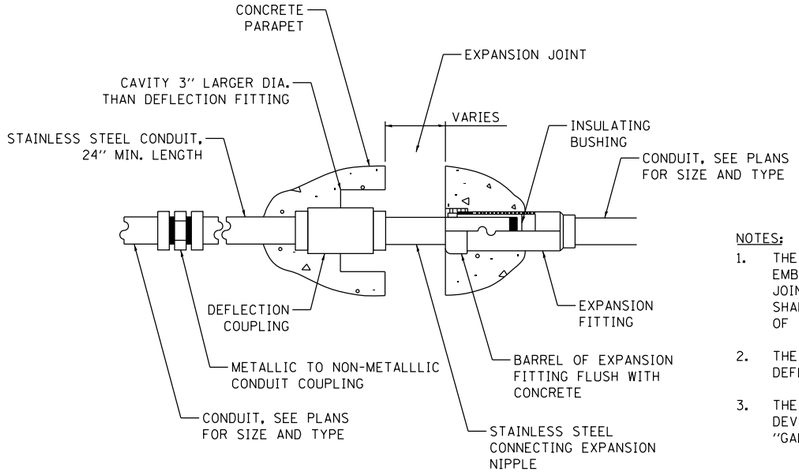

COMBINATION EXPANSION/DEFLECTION FITTING

NOT TO SCALE

NOTES:

1. THE BARREL IN THE EXPANSION FITTING SHALL BE FULLY EMBEDDED IN THE CONCRETE ON ONE SIDE OF THE EXPANSION JOINT. ONE HALF THE LENGTH OF THE DEFLECTION FITTING SHALL BE EMBEDDED IN THE CONCRETE ON THE OTHER SIDE OF THE EXPANSION JOINT.
2. THE CONTRACTOR SHALL INSTALL COMBINATION EXPANSION DEFLECTION FITTINGS AT ALL BRIDGE EXPANSION JOINTS.
3. THE COST OF INSTALLATION OF EXPANSION/DEFLECTION FITTING DEVICES SHALL BE CONSIDERED INCLUDED IN THE PAY ITEM "GALVANIZED STEEL CONDUIT ATTACHED TO STRUCTURE 2" OR 4".

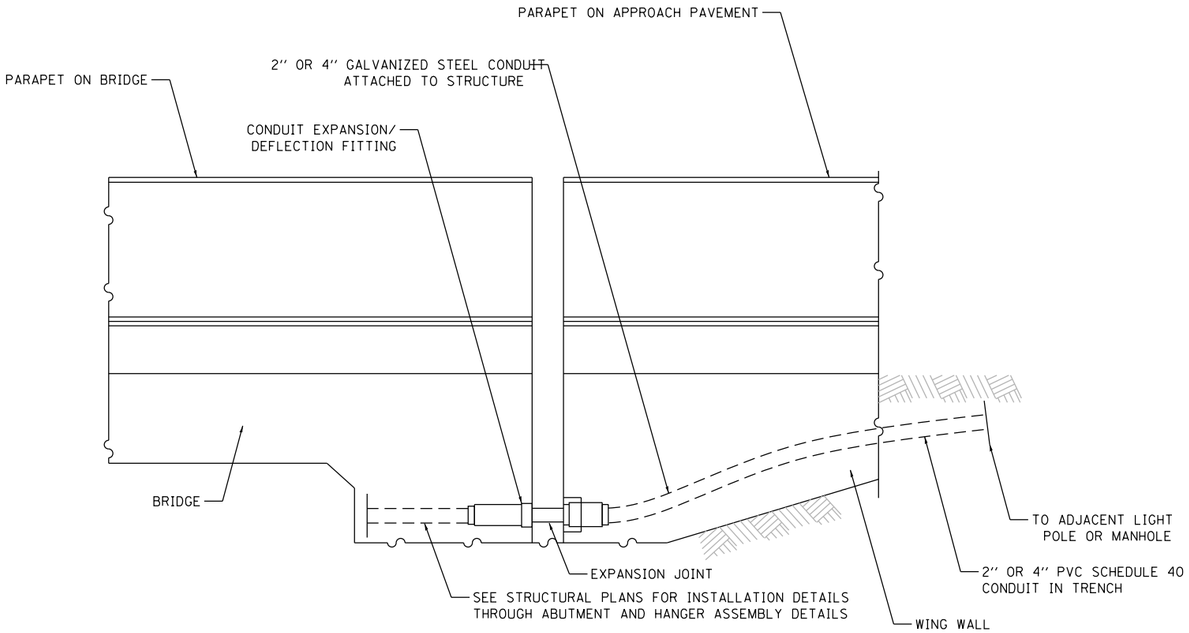

JOINTED ABUTMENT WITH PARAPET ON APPROACH PAVEMENT

NOT TO SCALE

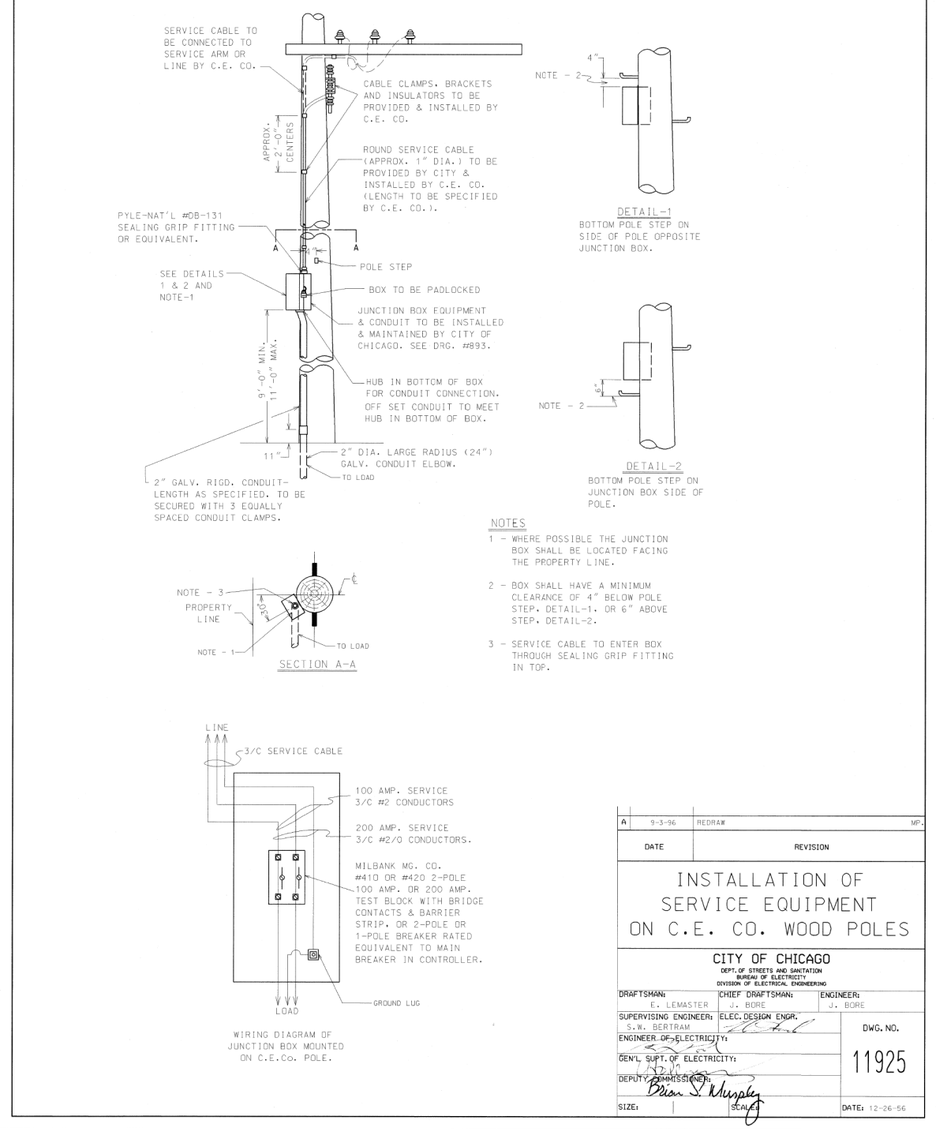

NOTES

1 - WHERE POSSIBLE THE JUNCTION BOX SHALL BE LOCATED FACING THE PROPERTY LINE.

2 - BOX SHALL HAVE A MINIMUM CLEARANCE OF 4" BELOW POLE STEP. DETAIL-1. OR 6" ABOVE STEP. DETAIL-2.

3 - SERVICE CABLE TO ENTER BOX THROUGH SEALING GRIP FITTING IN TOP.

A	9-3-96	REDRAW	MP.
DATE		REVISION	

INSTALLATION OF SERVICE EQUIPMENT ON C.E. CO. WOOD POLES

CITY OF CHICAGO
DEPT. OF STREETS AND SANITATION
BUREAU OF ELECTRICITY
DIVISION OF ELECTRICAL ENGINEERING

DRAFTSMAN: E. LEMASTER	CHIEF DRAFTSMAN: J. BORE	ENGINEER: J. BORE
SUPERVISING ENGINEER: S.W. BERTRAM	ELEC. DESIGN ENGR.	DWG. NO. 11925
ENGINEER OF ELECTRICITY:		
CEN'L. SUPT. OF ELECTRICITY:		
DEPUTY COMMISSIONER: Brian S. Murphy		
SIZE:	SCALE:	DATE: 12-26-96

...\E5038-sht_elecltgtng6.dgn
11/29/2017 1:43:38 PM

DESIGN: RAS					
DRAWN: RAS					
CHECKED: MKR					
APPROVED:					
DATE: 11/29/2017					
SCALE: NTS					
FILE:	NO.	BY	DATE	DESCRIPTION	
	REVISIONS				

CDOT CHICAGO DEPARTMENT OF TRANSPORTATION

EJM ENGINEERING, INC.
411 South Wells Street Suite 1000
Chicago, Illinois 60607

W. IRVING PARK ROAD AT NORTH BRANCH CHICAGO RIVER

STREET LIGHTING DETAILS

PROJECT NO. E-5-038

DRAWING NO. E-6

CONTRACT NO. XXXXX

TOTAL SHEETS	SHEET NO.
184	89

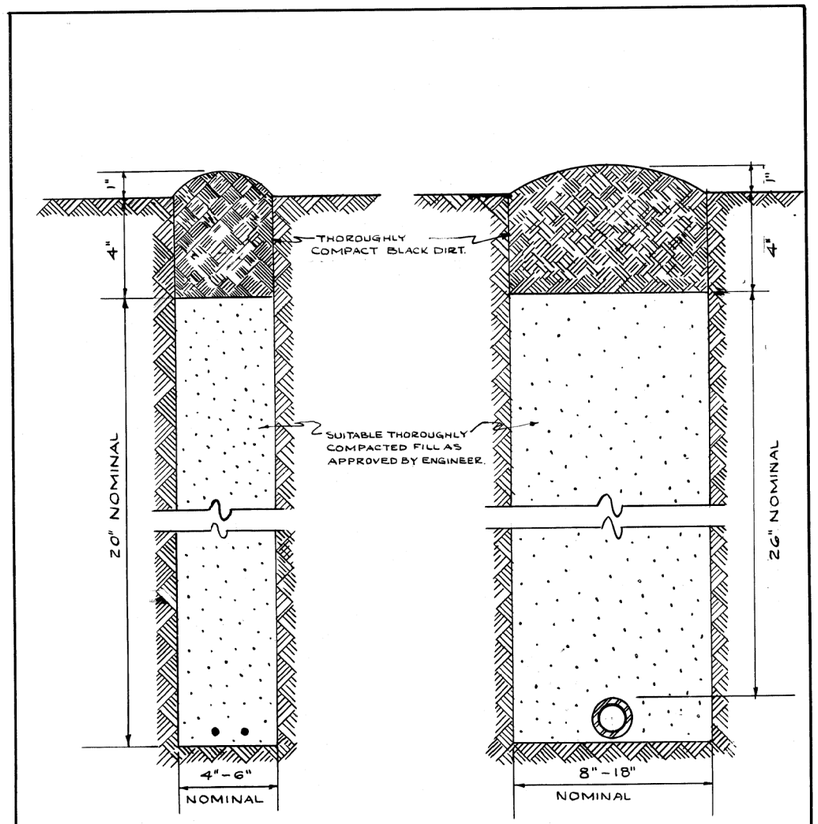

CABLE TRENCH

CONDUIT TRENCH

NOTE

EXCESS SOIL FROM TRENCH TO BE COMPLETELY REMOVED FROM SITE AS SOON AS PRACTICABLE.

BLACK DIRT TO BE TAMPED & THOROUGHLY COMPACTED AS SHOWN.

STANDARD METHOD FOR BACKFILLING CABLE & CONDUIT TRENCHES IN SODDED PARKWAY & LAWNS

REVISION	CITY OF CHICAGO DEPT. OF STREETS & SANITATION DIVISION OF ELECTRICAL ENGINEERING.		
A	DRAWN. W. E. HARP.	CHECKED. M. Shine	ENGINEER. J. O'CONNOR.
B	ENG. IN CHARGE. [signature]		DRG. NO. 579
C	SUPT. OF CONST. [signature]		
D	DEPUTY COMM. [signature]		
E	SIZE. 8½"x14"	SCALE: ~	DATE: 7-14-61
F			
G			
H			

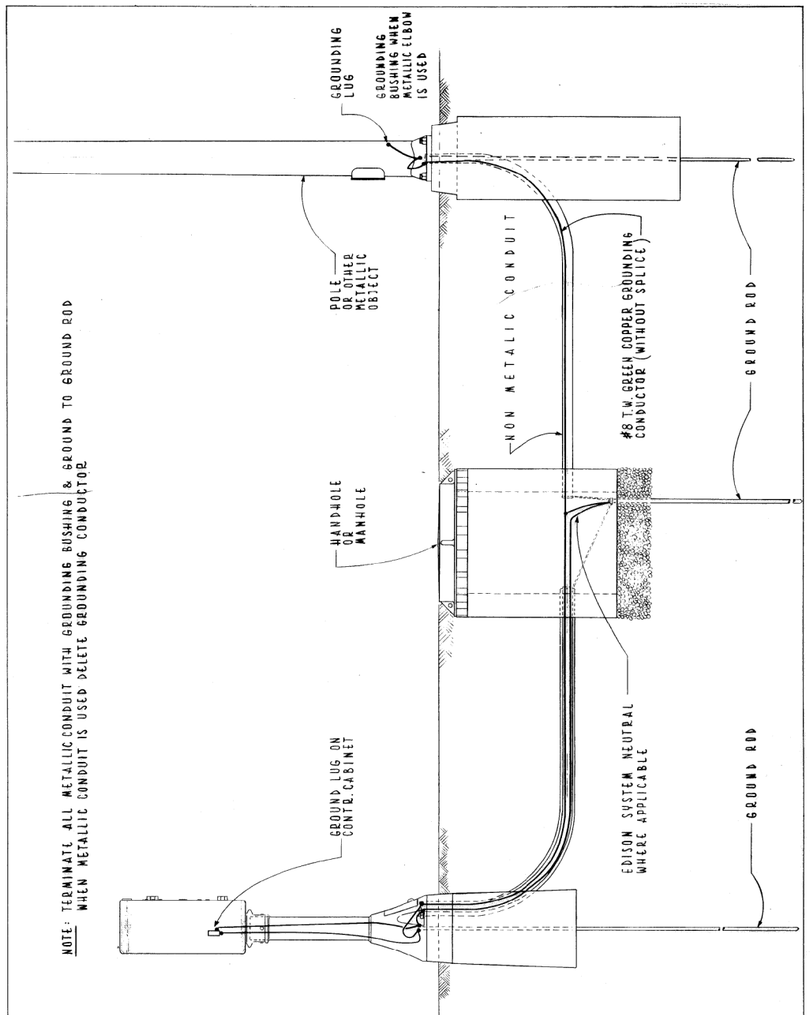

TYPICAL GROUNDING METHODS FOR BUREAU OF ELECTRICITY EQUIPMENT

CITY OF CHICAGO
DEPT. OF STREETS & SANITATION
BUREAU OF ELECTRICITY
DIVISION OF ELEC. ENGINEERING

REVISED	DRAWN: E. GERULIS	CHECKED: M. SHINE	ENGINEER: J. O'CONNOR
A	ENG. OF ELEC.: [signature]		DWG. NO. 736
B	SUPT. OF CONST.: [signature]		
C	DEPUTY COMM.: Charles E. Buckley		
D	SIZE: 8½" x 14"	SCALE: 1" = 10'	DATE: 5-12-76
E			
F			

DESIGN:	RAS				
DRAWN:	RAS				
CHECKED:	MKR				
APPROVED:					
DATE:	11/29/2017				
SCALE:	NTS				
FILE:		NO.	BY	DATE	DESCRIPTION
		REVISIONS			

CDOT
CHICAGO DEPARTMENT OF TRANSPORTATION

EJM ENGINEERING, INC.
411 South Wells Street Suite 1000
Chicago, Illinois 60607

W. IRVING PARK ROAD AT NORTH BRANCH CHICAGO RIVER

STREET LIGHTING DETAILS

PROJECT NO. E-5-038

DRAWING NO. E-7

CONTRACT NO. XXXXX

11/29/2017 1:43:44 PM ...\E5038-sht_elecIghtng7.dgn

CONDUIT INSTALLATION UNDER PAVED STREET

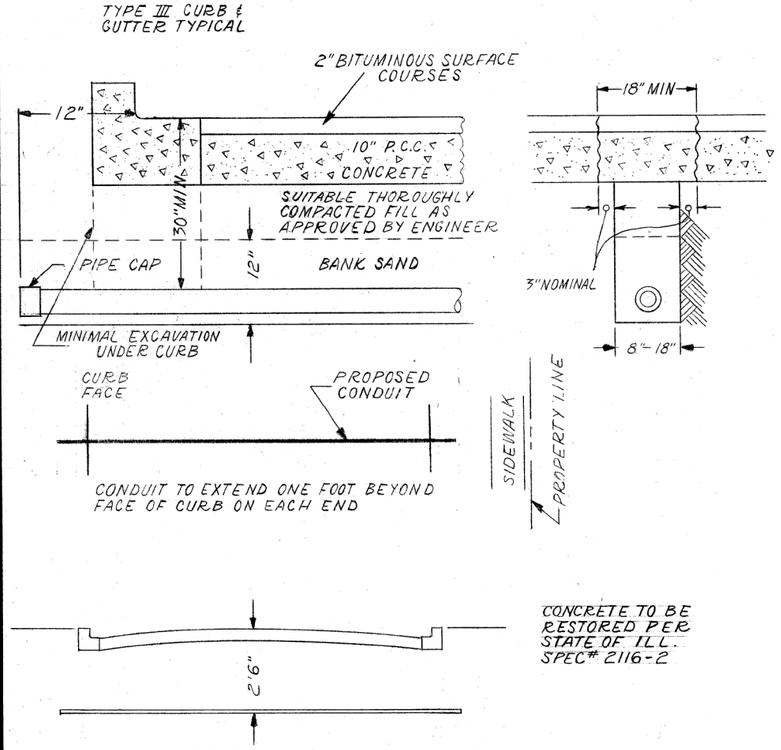

INSTALLATION METHOD OF INSTALLING CONDUIT UNDER PAVED ROADWAY

CITY OF CHICAGO
DEPT. OF STREETS AND SANITATION
BUREAU OF ELECTRICITY
DIVISION OF ELECTRICAL ENGINEERING

DRAWN	CHECKED	ENGINEER
A.M. JOHNSON	R. SYCKOWSKI	R.L. MARTIN

ENGINEER OF ELECTRICITY

DEPT. OF CONST. DEPUTY COMM.

DRG. NO. 813

SIZE $8\frac{1}{2}$"X14" SCALE N.T.S. DATE 3-13-81

CONDUIT INSTALLATION THROUGH EXISTING MANHOLE OR HANDHOLE WALL

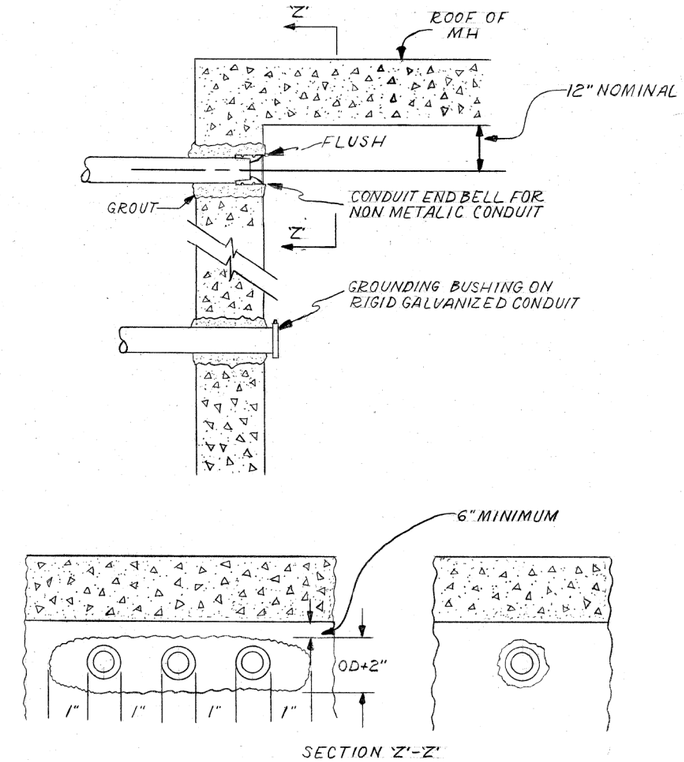

OPENING THROUGH WALL TO BE KEPT TO MININIMUN SIZE TO ADMIT CONDUIT AND SUFFICIENT GROUT TO ASSURE SEALING WALL.

INSTALLATION METHOD OF INSTALLING CONDUIT THRU MANHOLE WALL

CITY OF CHICAGO
DEPT. OF STREETS AND SANITATION
BUREAU OF ELECTRICITY
DIVISION OF ELECTRICAL ENGINEERING

DRAWN	CHECKED	ENGINEER
A.M. JOHNSON	R. SYCKOWSKI	R.L. MARTIN

ENGINEER OF ELECTRICITY

DEPT. OF CONST. DEPUTY COMM.

DRG. NO. 814

SIZE $8\frac{1}{2}$"X14" SCALE N.T.S. DATE 3-13-81

DESIGN: RAS				
DRAWN: RAS				
CHECKED: MKR				
APPROVED:				
DATE: 11/29/2017				
SCALE: NTS				
FILE:	NO.	BY	DATE	DESCRIPTION
	REVISIONS			

CDOT
CHICAGO DEPARTMENT OF TRANSPORTATION

EJM ENGINEERING, INC.
411 South Wells Street Suite 1000
Chicago, Illinois 60607

W. IRVING PARK ROAD AT NORTH BRANCH CHICAGO RIVER

STREET LIGHTING DETAILS

PROJECT NO. E-5-038

DRAWING NO. E–8

CONTRACT NO. XXXXX

11/29/2017 1:43:53 PM ...\E5038-sht_elec\ghtng8.dgn

TOTAL SHEETS	SHEET NO.
184	91

COMPLETE COMMODITY CODE NO. 05-6610-5310M			
CODE NO.	MATERIALS	SIZE	QUAN.
(1)05-6610-5310	PRE-CAST HANDHOLE	30"X36"	1
(2)05-9075-5470	STONE 3/4" CRUSHED	BAG	5
(2)05-5082-5330	SONO TUBE	30"	1
(2)05-5082-5342	SONO TUBE	42"	1
(2)05-3267-2940	CONC. REDI-MIX	CU. YD.	1/2
(2)57-0770-0000	6" X 6" MESH	36"X10'	1
05-1452-9720	BRICK		24
02-4299-5524	FRAME MANHOLE	24"	1
02-4574-5040	COVER, MANHOLE	24"	1
09-7796-9312	GROUND ROD	3/4"X12'	1
09-2630-3240	GROUND CLAMP		1

(1) PRE-CAST HANDHOLE SHALL INCLUDE CABLE HOOKS AND CONDUIT KNOCKOUTS.
(2) THESE ITEMS ARE FOR POURED-IN-PLACE HANDHOLES ONLY.

CONSTRUCTION NOTES:

1. 8" BED OF STONE FOR DRAINAGE.
2. ALL METALLIC CONDUITS ENTERING HANDHOLE SHALL EXTEND A MINIMUM OF 3" INSIDE INNER WALL AND BE EQUIPPED WITH AN APPROVED TYPE OF THREADED GROUNDING BUSHING.

NO.	BY	DATE	DESCRIPTION	AEC/CDD
B.	BJ	2-2-96	ADDED CABLE HOOKS FOR COMMUNICATIONS MANHOLE	
A.		12-8-95	REDRAW (CADD)	WP.

30" DIA. CONCRETE HANDHOLE

CITY OF CHICAGO
DEPARTMENT OF TRANSPORTATION
BUREAU OF ELECTRICAL ENGINEERING

DRAFTSMAN: W. PATTON
ENGINEER: B. CARTER
CHECKED BY: DESIGNED BY: TEMPLATE
DRAWING NO. 867
DATE: 12-4-95
SCALE: 1" = 1'-0" HOME

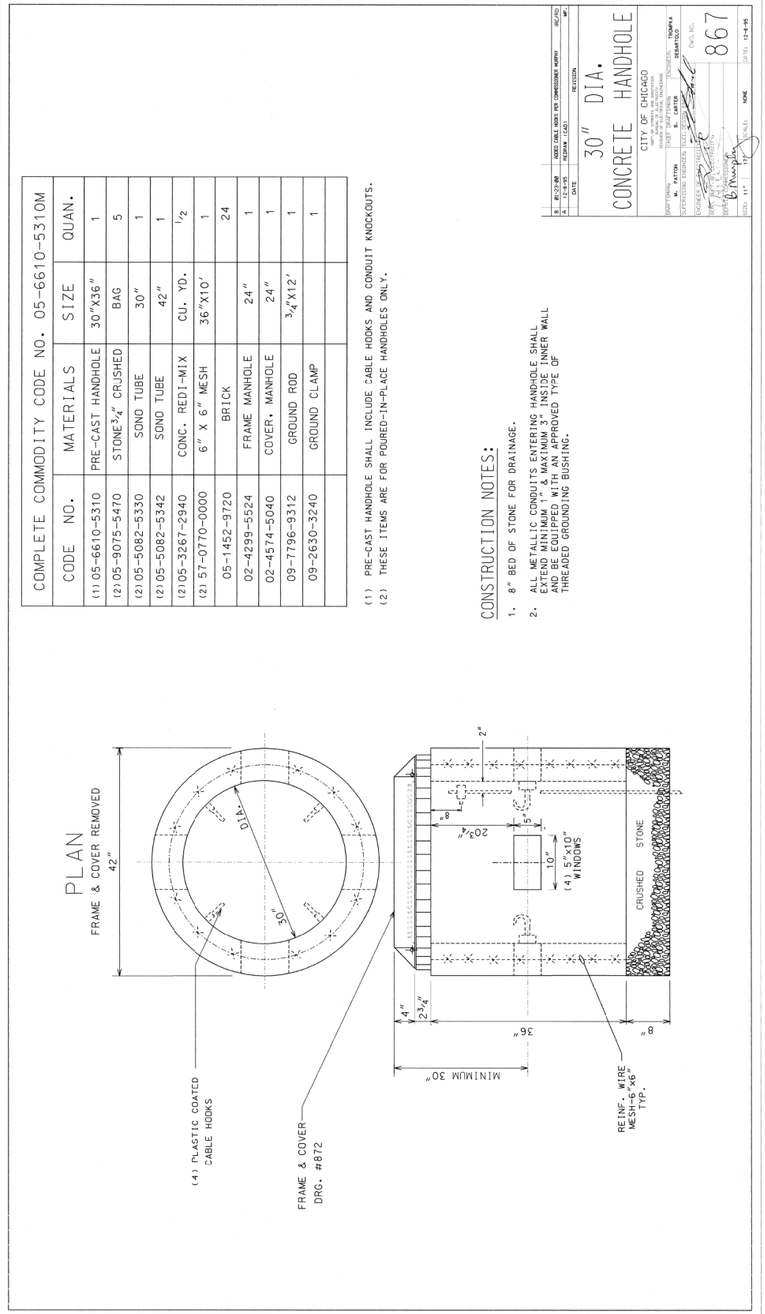

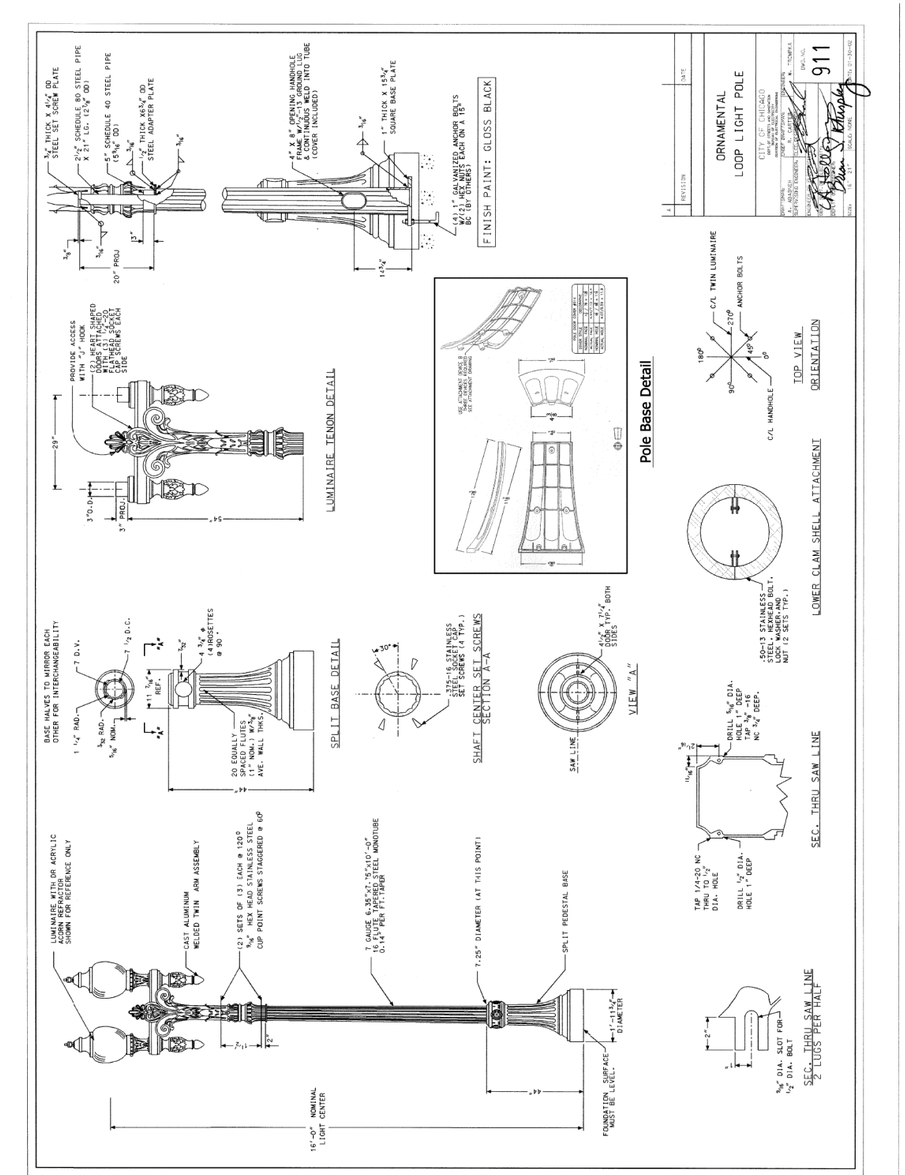

DESIGN: RAS				
DRAWN: RAS				
CHECKED: MKR				
APPROVED:				
DATE: 11/29/2017				
SCALE: NTS				
FILE:	NO.	BY	DATE	DESCRIPTION
	REVISIONS			

CDOT
CHICAGO DEPARTMENT OF TRANSPORTATION

EJM ENGINEERING, INC.
411 South Wells Street Suite 1000
Chicago, Illinois 60607

W. IRVING PARK ROAD AT NORTH BRANCH CHICAGO RIVER

STREET LIGHTING DETAILS

PROJECT NO. E-5-038
DRAWING NO. E–9
CONTRACT NO. XXXXX

11/29/2017 1:44:02 PM ...\E5038-sht_elecltghtng9.dgn

TOTAL SHEETS	SHEET NO.
184	92

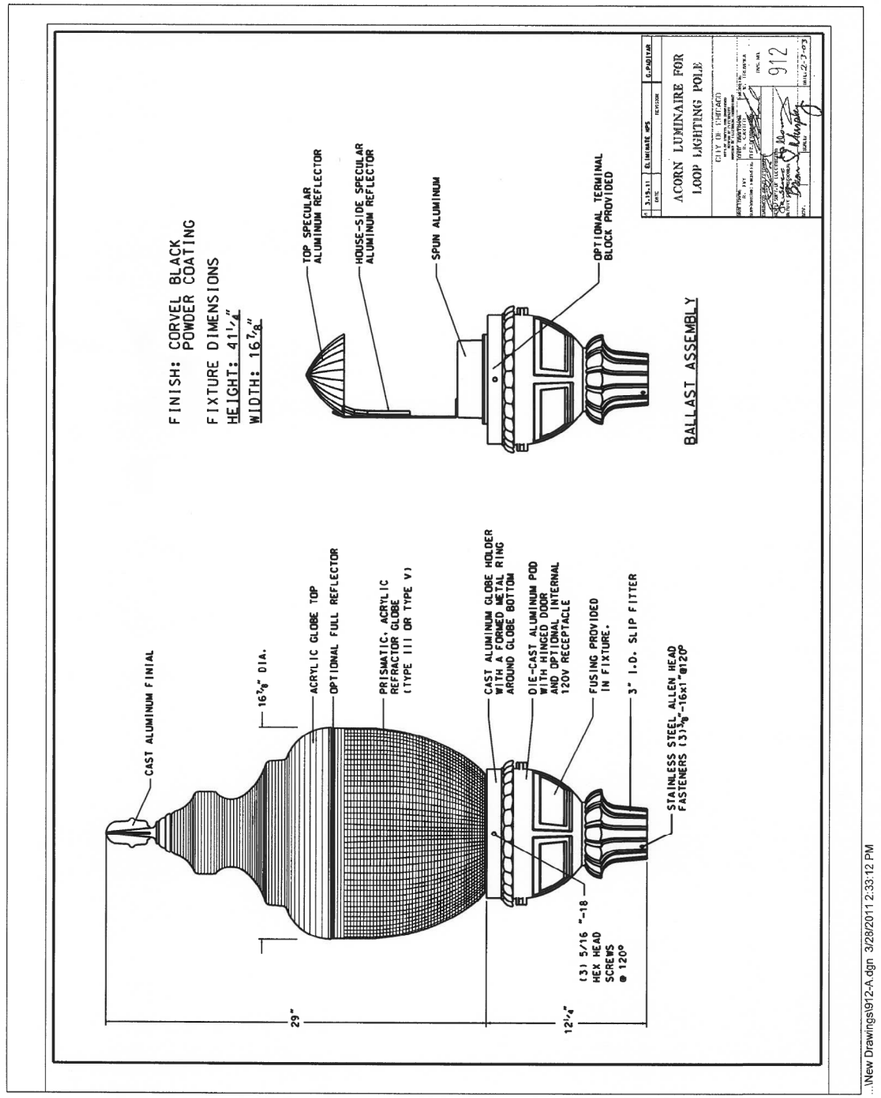

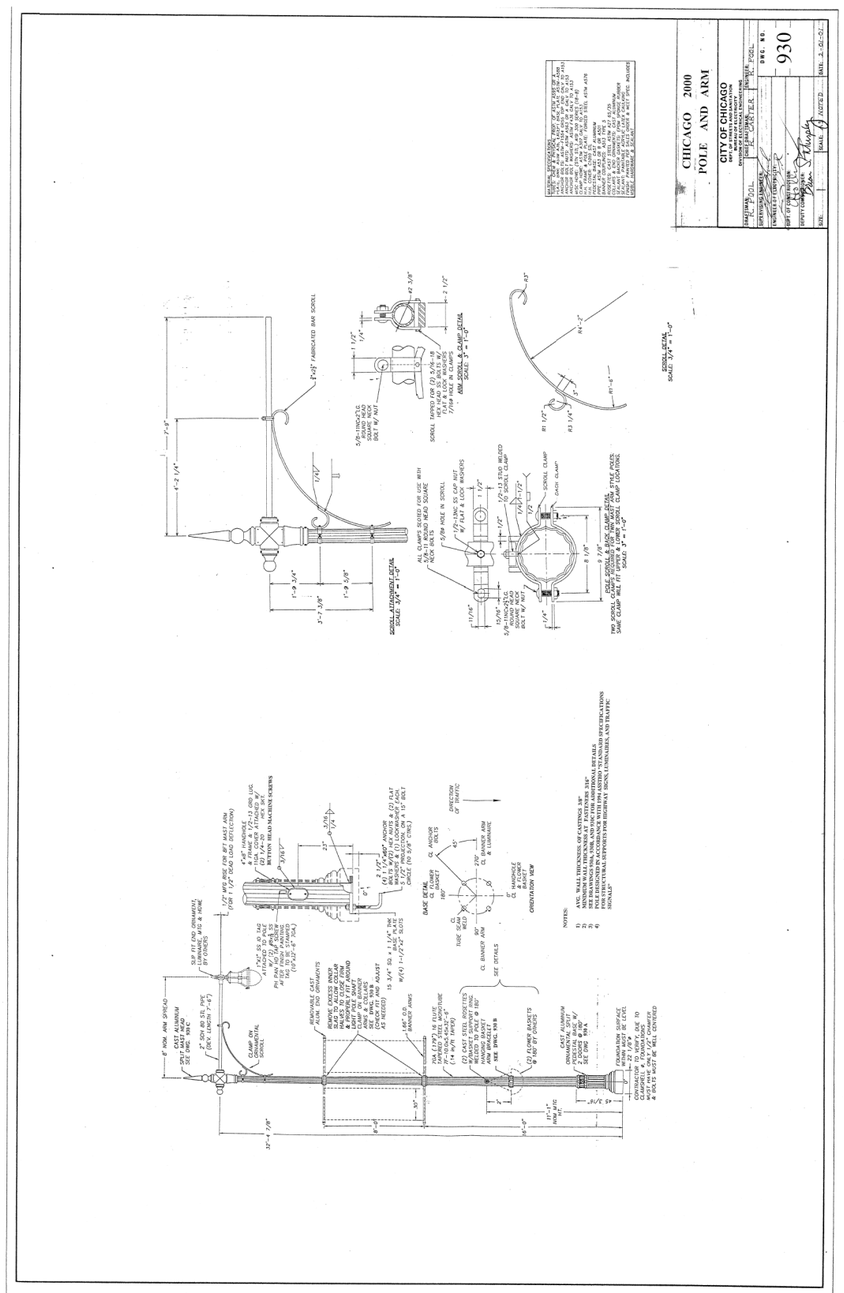

...\E5038-sht_elecltghting10.dgn 11/29/2017 1:44:12 PM
...\New Drawings\912-A.dgn 3/28/2011 2:33:12 PM

DESIGN: RAS				
DRAWN: RAS				
CHECKED: MKR				
APPROVED:				
DATE: 11/29/2017				
SCALE: NTS				
FILE:	NO.	BY	DATE	DESCRIPTION
	REVISIONS			

CDOT
CHICAGO DEPARTMENT OF TRANSPORTATION

EJM ENGINEERING, INC.
411 South Wells Street Suite 1000
Chicago, Illinois 60607

W. IRVING PARK ROAD AT NORTH BRANCH CHICAGO RIVER

STREET LIGHTING DETAILS

PROJECT NO. E-5-038

DRAWING NO. E–10

CONTRACT NO. XXXXX

TOTAL SHEETS	SHEET NO.
184	93

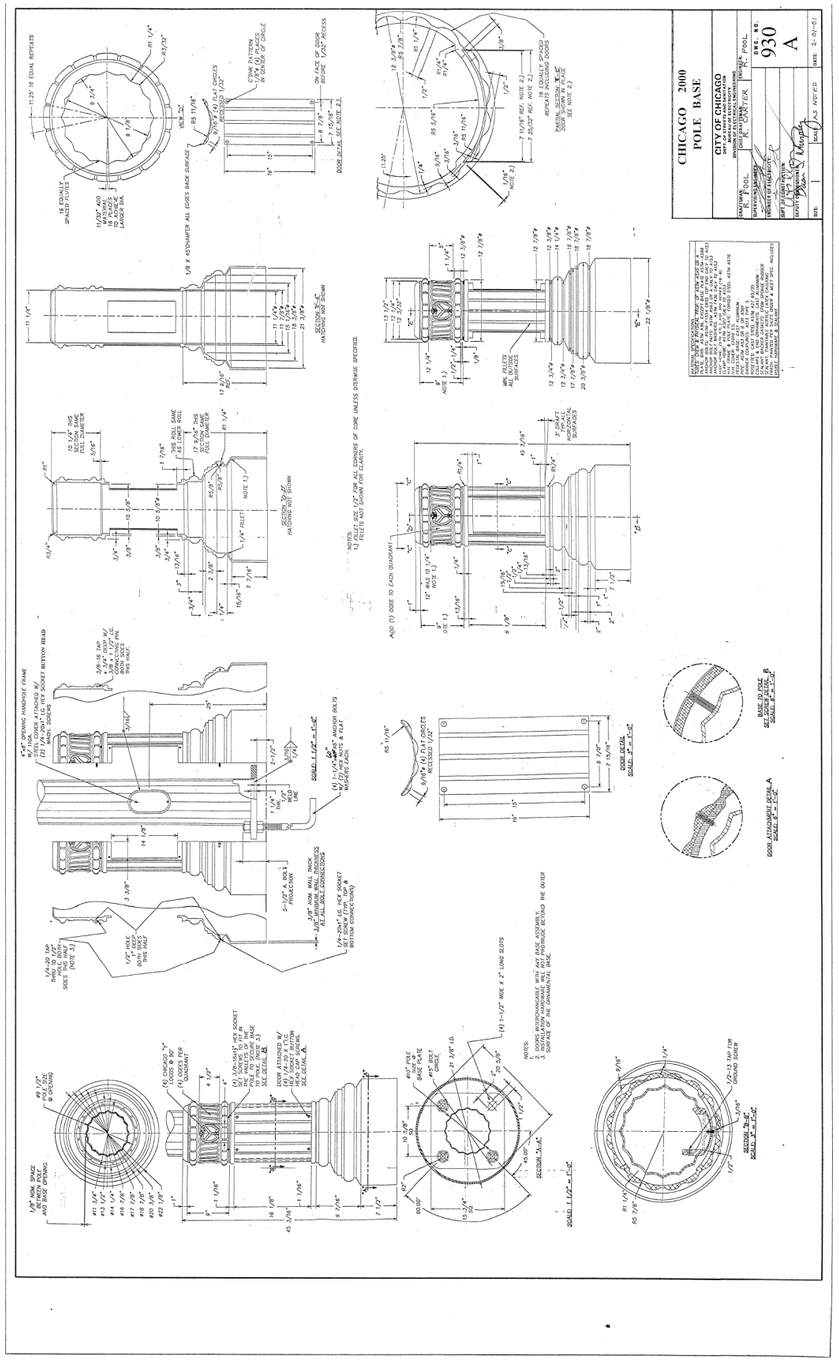

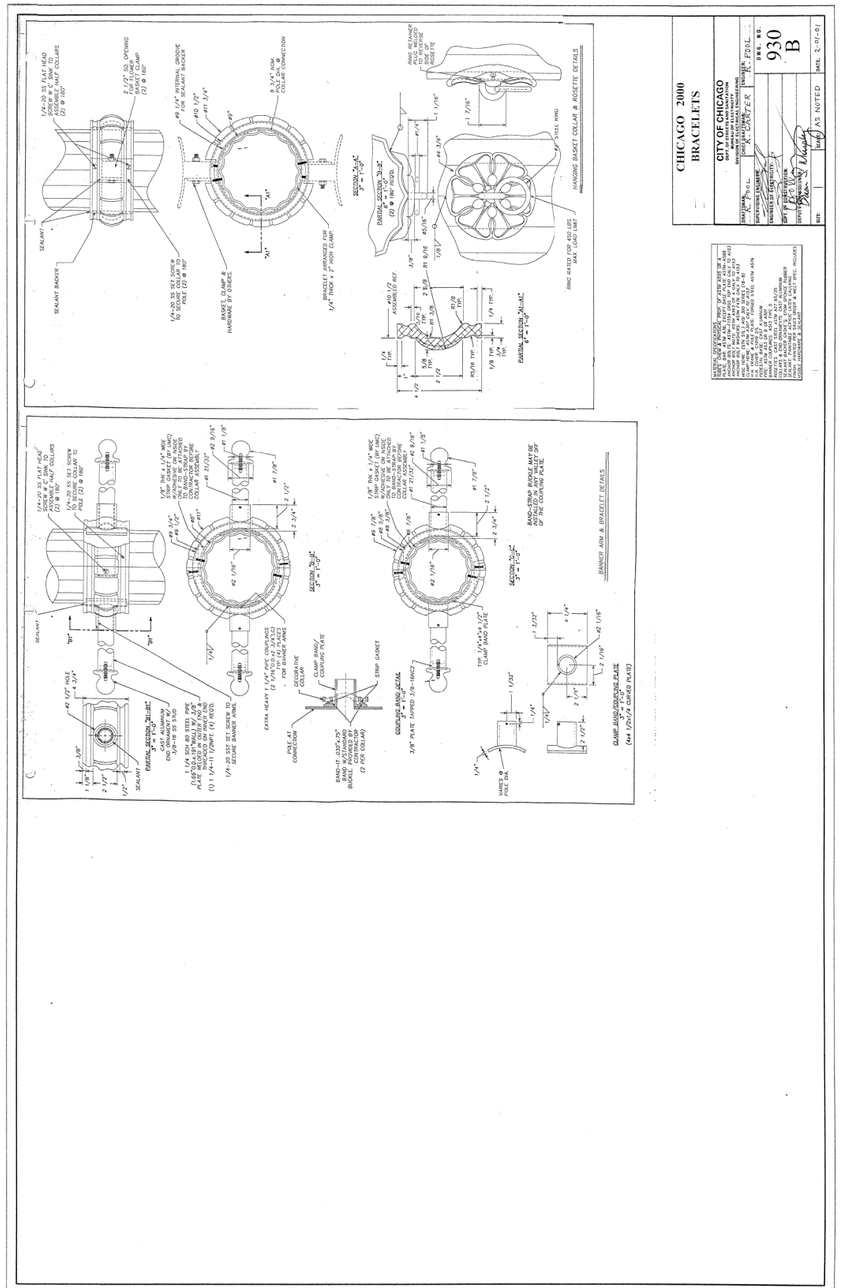

...\E5038-sht_elecldghtng11.dgn
11/29/2017 1:44:26 PM

DESIGN: RAS				
DRAWN: RAS				
CHECKED: MKR				
APPROVED:				
DATE: 11/29/2017				
SCALE: NTS				
FILE:	NO.	BY	DATE	DESCRIPTION
	REVISIONS			

CDOT
CHICAGO DEPARTMENT OF TRANSPORTATION

EJM ENGINEERING, INC.
411 South Wells Street Suite 1000
Chicago, Illinois 60607

W. IRVING PARK ROAD
AT NORTH BRANCH
CHICAGO RIVER

STREET LIGHTING DETAILS

PROJECT NO. E-5-038
DRAWING NO. E–11
CONTRACT NO. XXXXX

TOTAL SHEETS	SHEET NO.
184	94

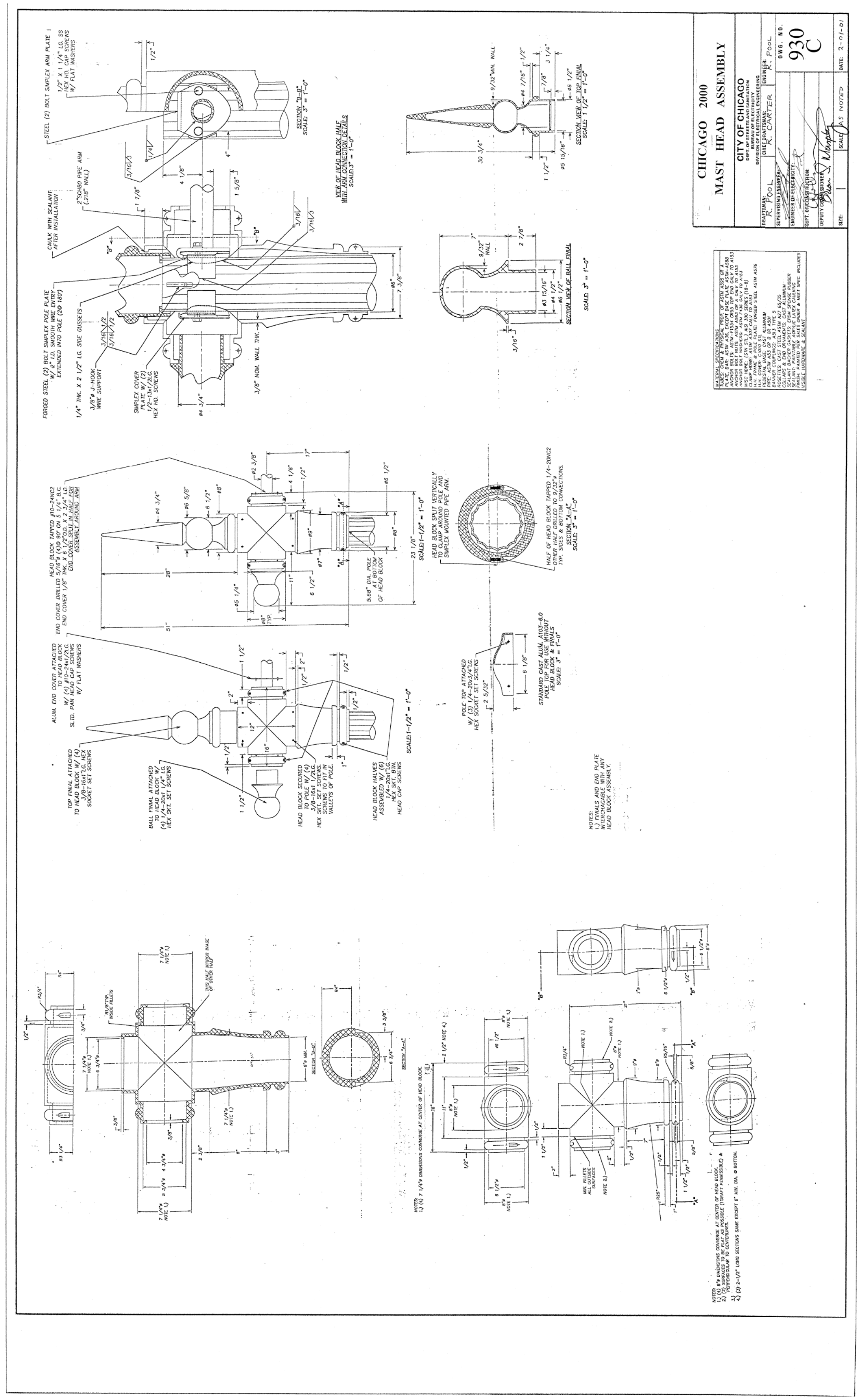

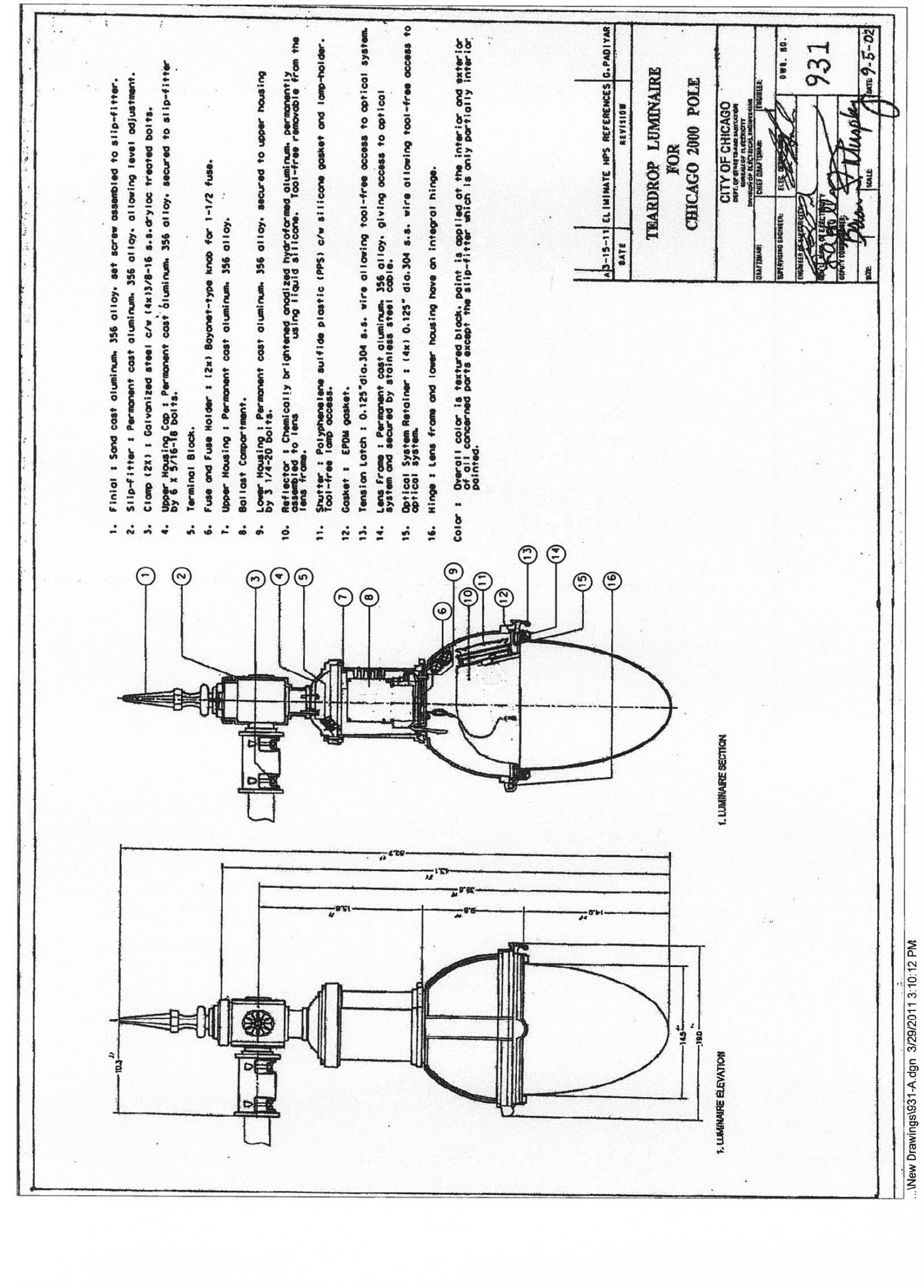

...\E5038-sht_eleclghtng12.dgn

11/29/2017 1:44:36 PM

DESIGN: RAS				
DRAWN: RAS				
CHECKED: MKR				
APPROVED:				
DATE: 11/29/2017				
SCALE: NTS				
FILE:	NO.	BY	DATE	DESCRIPTION
	REVISIONS			

CDOT
CHICAGO DEPARTMENT OF TRANSPORTATION

EJM ENGINEERING, INC.
411 South Wells Street Suite 1000
Chicago, Illinois 60607

W. IRVING PARK ROAD
AT NORTH BRANCH
CHICAGO RIVER

STREET LIGHTING DETAILS

PROJECT NO. E-5-038

DRAWING NO. E–12

CONTRACT NO. XXXXX

TOTAL SHEETS	SHEET NO.
184	95

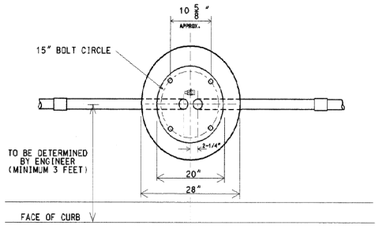

TOP VIEW

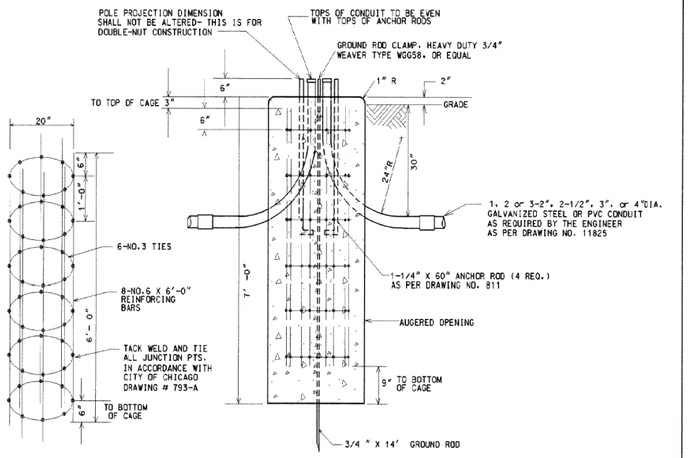

ISOMETRIC VIEW
OF STEEL CAGE

ELEVATION

NOTES:
1. CONCRETE MUST MEET IDOT REQUIREMENTS FOR PORTLAND CEMENT CLASS SI CONCRETE.
2. REINFORCING BARS MUST MEET ASTM A-615 GRADE 60.

NOTE:
HOLE FOR FOUNDATION MUST BE AUGERED IN UNDISTURBED SOIL

CODE	COMMODITY	SIZE	QUANTITY
05-3267-2940	REDI-MIX CONCRETE	CU. YD.	1.11
09-4001-	ELBOW, LARGE RADIUS	2",2-1/2",3",4"	AS REQUIRED
37-8180-0200	ANCHOR ROD	1-1/4" X 60"	4
05-5054-6910	RE-BAR CAGE	20" ⌀ X 6'-0"	1
09-7796	GROUND ROD	¾" X 14'-0"	1
09-2636-	GROUND ROD CLAMP	3/4"	1
	GROUND BUSHING	2",2-1/2",3",4"	AS REQUIRED

DATE	REVISION

FOUNDATION FOR CHICAGO 2000 GATEWAY POLE & CHICAGO 2000 PEDESTRIAN POLE

CITY OF CHICAGO
DEPT. OF STREETS AND SANITATION
BUREAU OF ELECTRICITY
DIVISION OF ELECTRICAL ENGINEERING

DRAFTSMAN:	CHIEF DRAFTSMAN:	ENGINEER:
B. GARNSEY	R. CARTER	B. GARNSEY

ELECTRICAL DESIGN ENGINEER
ENGINEER OF ELECTRICITY
GENERAL SUPERINTENDENT
DEPUTY COMMISSIONER

DRAWING NO. 953

SIZE: 11" x 17" | SCALE: NONE | DATE: 8/21/02

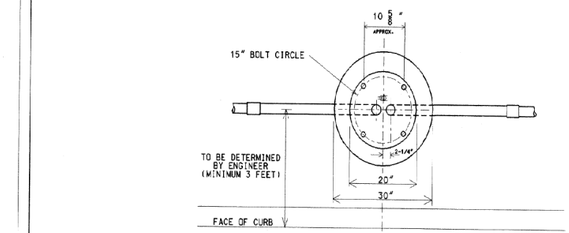

TOP VIEW

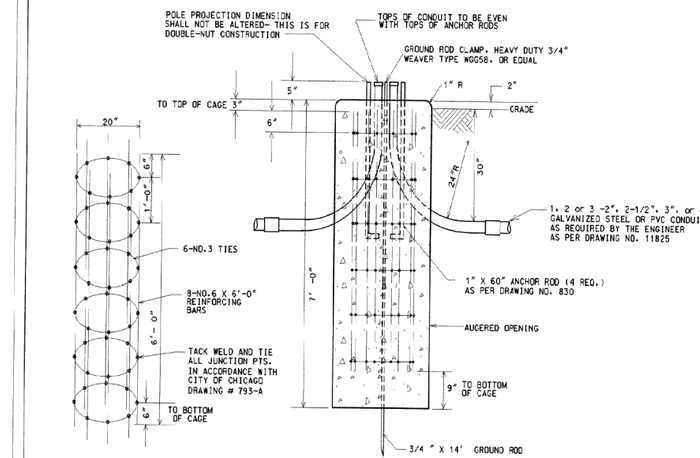

ISOMETRIC VIEW
OF STEEL CAGE

ELEVATION

NOTES:
1. CONCRETE MUST MEET IDOT REQUIREMENTS FOR PORTLAND CEMENT CLASS SI CONCRETE.
2. REINFORCING BARS MUST MEET ASTM A-615 GRADE 60.

NOTE:
HOLE FOR FOUNDATION MUST BE AUGERED IN UNDISTURBED SOIL

CODE	COMMODITY	SIZE	QUANTITY
05-3267-2940	REDI-MIX CONCRETE	CU. YD.	1.27
09-4001-	ELBOW, LARGE RADIUS	2",2-1/2",3",4"	AS REQUIRED
37-8180-0200	ANCHOR ROD	1" X 60"	4
05-5054-6310	RE-BAR CAGE	20" ⌀ X 6'-0"	1
09-7796	GROUND ROD	¾" X 14'-0"	1
09-2636-	GROUND ROD CLAMP	3/4"	1
	GROUND BUSHING	2",2-1/2",3",4"	AS REQUIRED

DATE	REVISION

FOUNDATION FOR LOOP POLE & EXTENDED LOOP POLE

CITY OF CHICAGO
DEPT. OF STREETS AND SANITATION
BUREAU OF ELECTRICITY
DIVISION OF ELECTRICAL ENGINEERING

DRAFTSMAN:	CHIEF DRAFTSMAN:	ENGINEER:
B. GARNSEY	B. CARTER	B. GARNSEY

ELECTRICAL DESIGN ENGINEER
ENGINEER OF ELECTRICITY
GENERAL SUPERINTENDENT
DEPUTY COMMISSIONER

DRAWING NO. 956

SIZE: 11" x 17" | SCALE: NONE | DATE: 8/21/02

DESIGN: RAS				
DRAWN: RAS				
CHECKED: MKR				
APPROVED:				
DATE: 11/29/2017				
SCALE: NTS				
FILE:	NO.	BY	DATE	DESCRIPTION
	REVISIONS			

CDOT
CHICAGO DEPARTMENT OF TRANSPORTATION

EJM ENGINEERING, INC.
411 South Wells Street Suite 1000
Chicago, Illinois 60607

W. IRVING PARK ROAD AT NORTH BRANCH CHICAGO RIVER

STREET LIGHTING DETAILS

PROJECT NO. E-5-038

DRAWING NO. E-13

CONTRACT NO. XXXXX

11/29/2017 1:44:47 PM ...\E5038-sht_elecdghtng13.dgn

TOTAL SHEETS	SHEET NO.
184	96

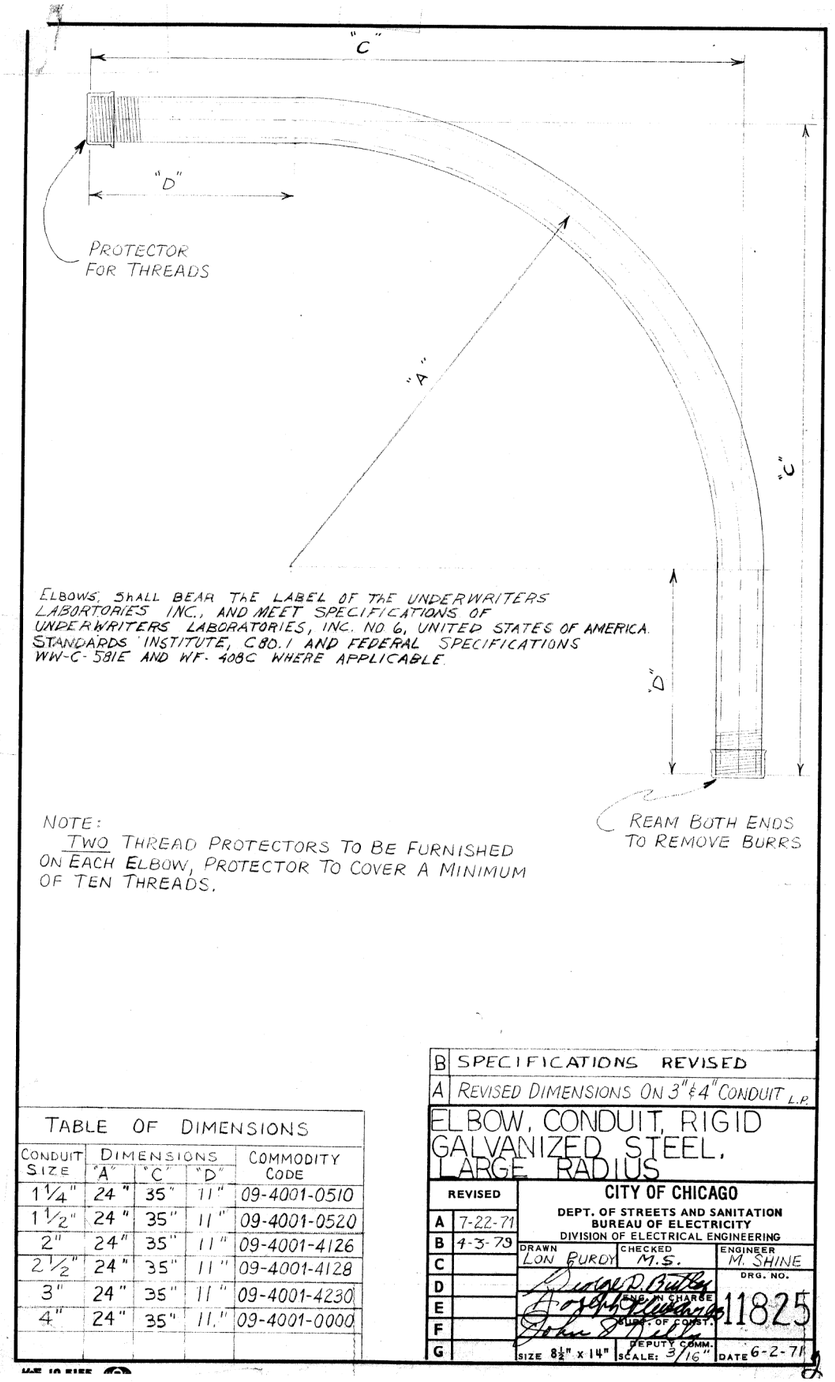

TABLE OF DIMENSIONS				
CONDUIT SIZE	DIMENSIONS "A"	"C"	"D"	COMMODITY CODE
1¼"	24"	35"	11"	09-4001-0510
1½"	24"	35"	11"	09-4001-0520
2"	24"	35"	11"	09-4001-4126
2½"	24"	35"	11"	09-4001-4128
3"	24"	35"	11"	09-4001-4230
4"	24"	35"	11"	09-4001-0000

REVISED	
B	SPECIFICATIONS REVISED
A	REVISED DIMENSIONS ON 3" & 4" CONDUIT L.P.

ELBOW, CONDUIT, RIGID GALVANIZED STEEL, LARGE RADIUS

REVISED		CITY OF CHICAGO
A	7-22-71	DEPT. OF STREETS AND SANITATION
B	4-3-79	BUREAU OF ELECTRICITY
C		DIVISION OF ELECTRICAL ENGINEERING
D		DRAWN: LON BURDY; CHECKED: M.S.; ENGINEER: M. SHINE
E		ENGR. IN CHARGE; SUPT. OF CONST.; DEPUTY COMM.
F		ORG. NO. 11825
G		SIZE 8½" x 14" SCALE: 3/16" DATE 6-2-71

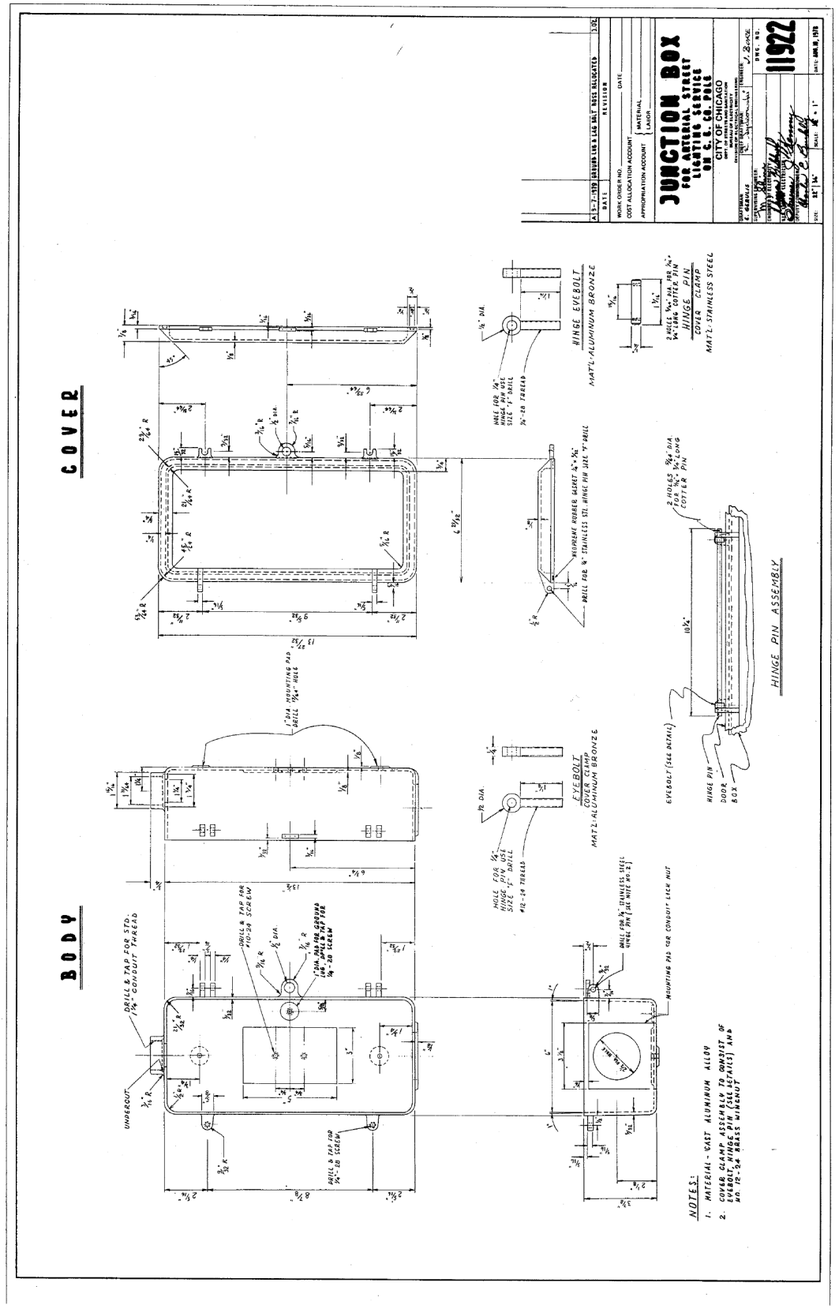

DESIGN: RAS				
DRAWN: RAS				
CHECKED: MKR				
APPROVED:				
DATE: 11/29/2017				
SCALE: NTS				
FILE:	NO.	BY	DATE	DESCRIPTION
	REVISIONS			

CDOT
CHICAGO DEPARTMENT OF TRANSPORTATION

EJM ENGINEERING, INC.
411 South Wells Street Suite 1000
Chicago, Illinois 60607

W. IRVING PARK ROAD AT NORTH BRANCH CHICAGO RIVER

STREET LIGHTING DETAILS

PROJECT NO. E-5-038
DRAWING NO. E–14
CONTRACT NO. XXXXX

11/29/2017 1:44:56 PM ...\E5038-sht_elecdghtng14.dgn

TOTAL SHEETS	SHEET NO.
184	97

LIGHTING AND ELECTRICAL LEGEND - CHICAGO PARK DISTRICT	
SYMBOL	DESCRIPTION
	EXISTING CONCRETE POLE TO REMAIN IN PLACE
	PROPOSED LED COBRAHEAD LUMINAIRE ON 20 FT. CONCRETE POLE, 277V
	PROPOSED UNDERPASS LUMINAIRE, LED, SUSPENDED FROM BRIDGE DECK
P	12"X12" OPEN BOTTOM POLYMER HANDHOLE
	PROPOSED CONDUIT (TYPE AND SIZE AS INDICATED ON PLANS)
	PROPOSED LIGHTING CABLE, DIRECT BURY
P	EXISTING HANDHOLE
	EXISTING LIGHTING CABLE
J	PROPOSED JUNCTION BOX, STAINLESS STEEL, ATTACHED TO STRUCTURE, 6"X6"X4" U.N.O.

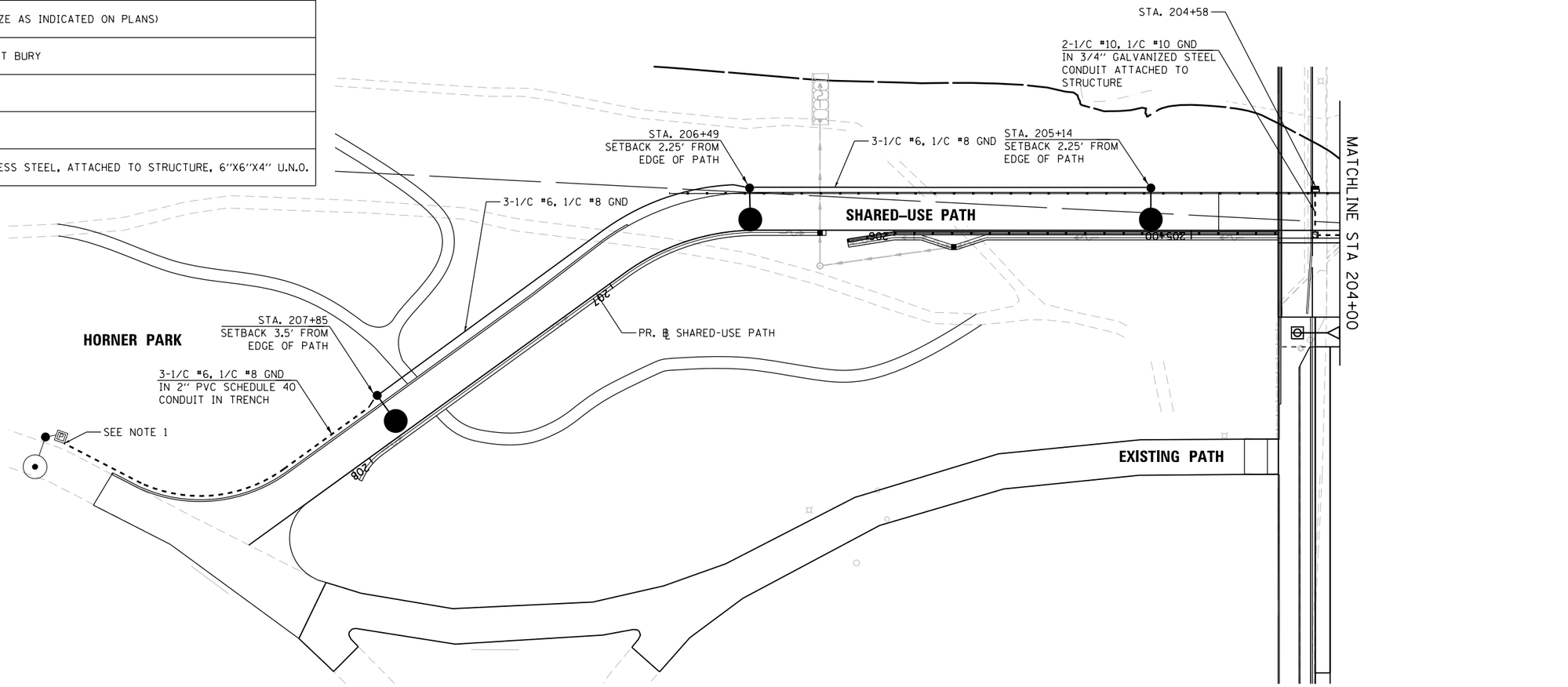

NOTES:

1. SPLICE NEW CONDUCTORS TO EXISTING CONDUCTORS IN EXISTING HANDHOLE. THE COST OF THIS WORK IS INCLUDED IN THE PRICE OF THE NEW CONDUCTORS.
2. SEE SHEET E-18 FOR UNDERPASS LIGHTING DETAILS.

0 20 40 60
SCALE IN FEET

...\E5038-sht_elecltghting15.dgn
11/29/2017 1:45:06 PM

DESIGN: RAS				
DRAWN: RAS				
CHECKED: MKR				
APPROVED:				
DATE: 11/29/2017				
SCALE: 1" = 20'				
FILE:	NO.	BY	DATE	DESCRIPTION
	REVISIONS			

KEY PLAN:

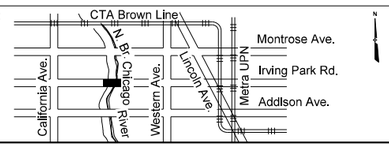

CDOT
CHICAGO DEPARTMENT
OF TRANSPORTATION

EJM ENGINEERING, INC.
411 South Wells Street Suite 1000
Chicago, Illinois 60607

W. IRVING PARK ROAD
AT NORTH BRANCH
CHICAGO RIVER

LIGHTING PLAN
SHARED-USE PATH

STATION 200+00 TO STATION 204+00

PROJECT NO. E-5-038
DRAWING NO. E-15
CONTRACT NO. XXXXX

TOTAL SHEETS	SHEET NO.
184	98

LIGHTING AND ELECTRICAL LEGEND - CHICAGO PARK DISTRICT	
SYMBOL	DESCRIPTION
	EXISTING CONCRETE POLE TO REMAIN IN PLACE
	PROPOSED LED COBRAHEAD LUMINAIRE ON 20 FT. CONCRETE POLE, 208V
	PROPOSED UNDERPASS LUMINAIRE, LED, SUSPENDED FROM BRIDGE DECK
P	12"X12" OPEN BOTTOM POLYMER HANDHOLE
	PROPOSED CONDUIT (TYPE AND SIZE AS INDICATED ON PLANS)
	PROPOSED LIGHTING CABLE, DIRECT BURY
P	EXISTING HANDHOLE
	EXISTING LIGHTING CABLE
J	PROPOSED JUNCTION BOX, STAINLESS STEEL, ATTACHED TO STRUCTURE, 6"X6"X4" U.N.O.
RS	REMOVE AND SALVAGE EXISTING CONDOMINIUM OWNED PEDESTRIAN LIGHTING UNITS

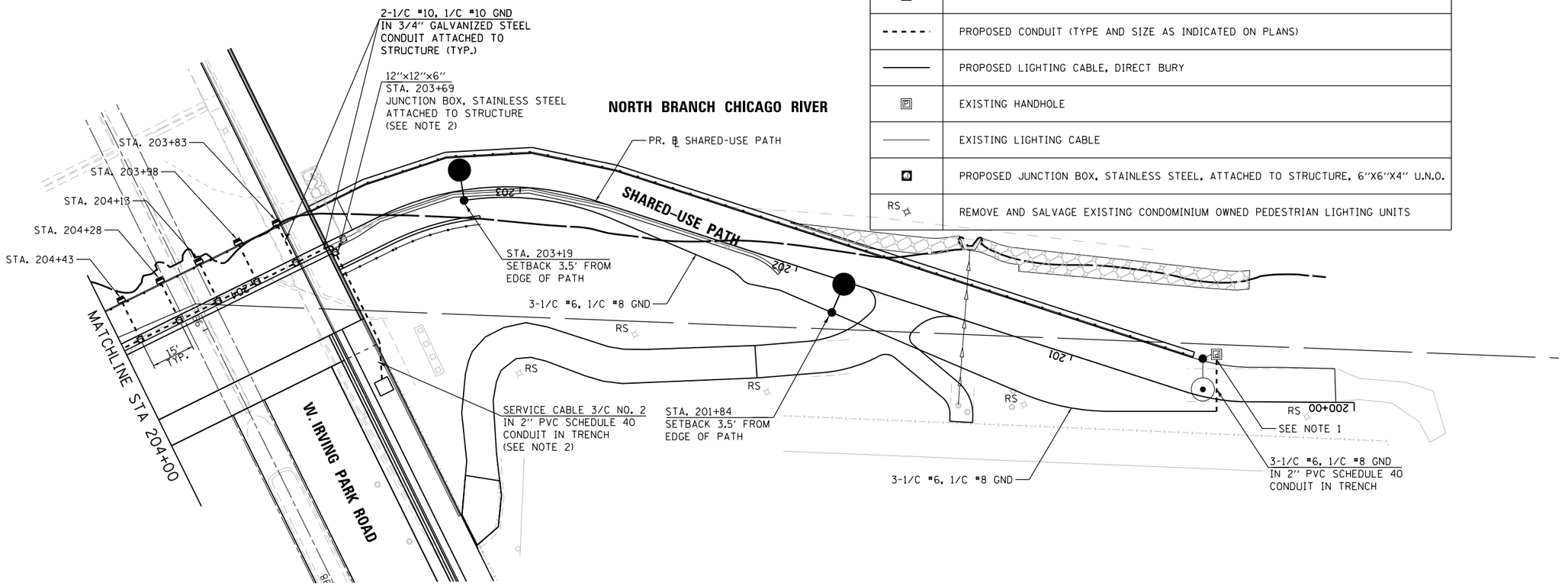

N

NOTES;

1. SPLICE NEW CONDUCTORS TO EXISTING CONDUCTORS IN EXISTING HANDHOLE. THE COST OF THIS WORK IS INCLUDED IN THE PRICE OF THE NEW CONDUCTORS.

2. SEE SHEET E-18 FOR UNDERPASS LIGHTING DETAILS AND HANDHOLE TO JUNCTION BOX CONNECTION DETAIL. SEE SHEETS E-3 AND E-4 FOR ELECTRICAL SERVICE DETAIL.

3. REMOVE EXISTING CONDOMINIUM OWNED PEDESTRIAN LIGHTING UNITS AS SHOWN ON THE PLANS. SALVAGED LIGHTING UNITS SHALL BE DELIVERED TO A ALOCATION AS DESIGNATED BY THE CONDO ASSOCIATION MAINTENANCE ENGINEER STEVE VELA. CONTRACTOR SHALL CONTACT STEVE VELA 72 HOURS IN ADVANCE TO DISCONNECT POWER TO THE LIGHTING UNITS. THIS WORK SHALL BE INCLUDED IN THE COST OF THE PAY ITEM "REMOVE EXISTING STREET LIGHTING EQUIPMENT".

0 20 40 60
SCALE IN FEET

E-16

...\E5038-sht_elecltghtng16.dgn
11/29/2017 1:45:08 PM

DESIGN:	RAS
DRAWN:	RAS
CHECKED:	MKR
APPROVED:	
DATE:	11/29/2017
SCALE:	1" = 20'
FILE:	

NO.	BY	DATE	DESCRIPTION
REVISIONS			

KEY PLAN:

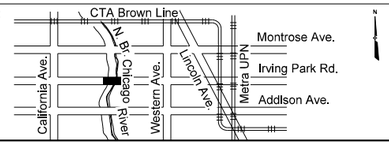

CDOT
CHICAGO DEPARTMENT OF TRANSPORTATION

EJM ENGINEERING, INC.
411 South Wells Street Suite 1000
Chicago, Illinois 60607

W. IRVING PARK ROAD AT NORTH BRANCH CHICAGO RIVER

LIGHTING PLAN
SHARED-USE PATH

STATION 204+00 TO STATION 207+95

CDOT 17-032	
PROJECT NO.	E-5-038
DRAWING NO.	17-032
CONTRACT NO.	XXXXX

TOTAL SHEETS	SHEET NO.
184	99

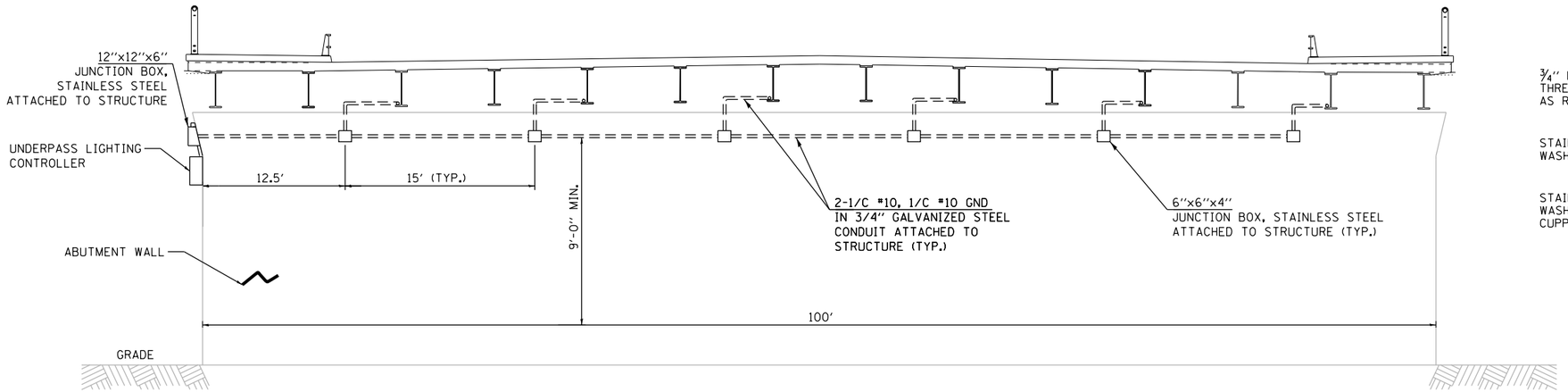

ELEVATION VIEW – FACING WEST

NTS

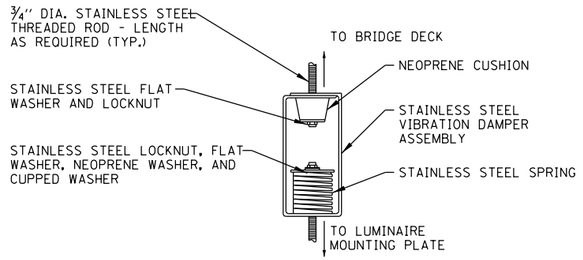

LUMINAIRE HANGER ASSEMBLY DETAIL

NTS

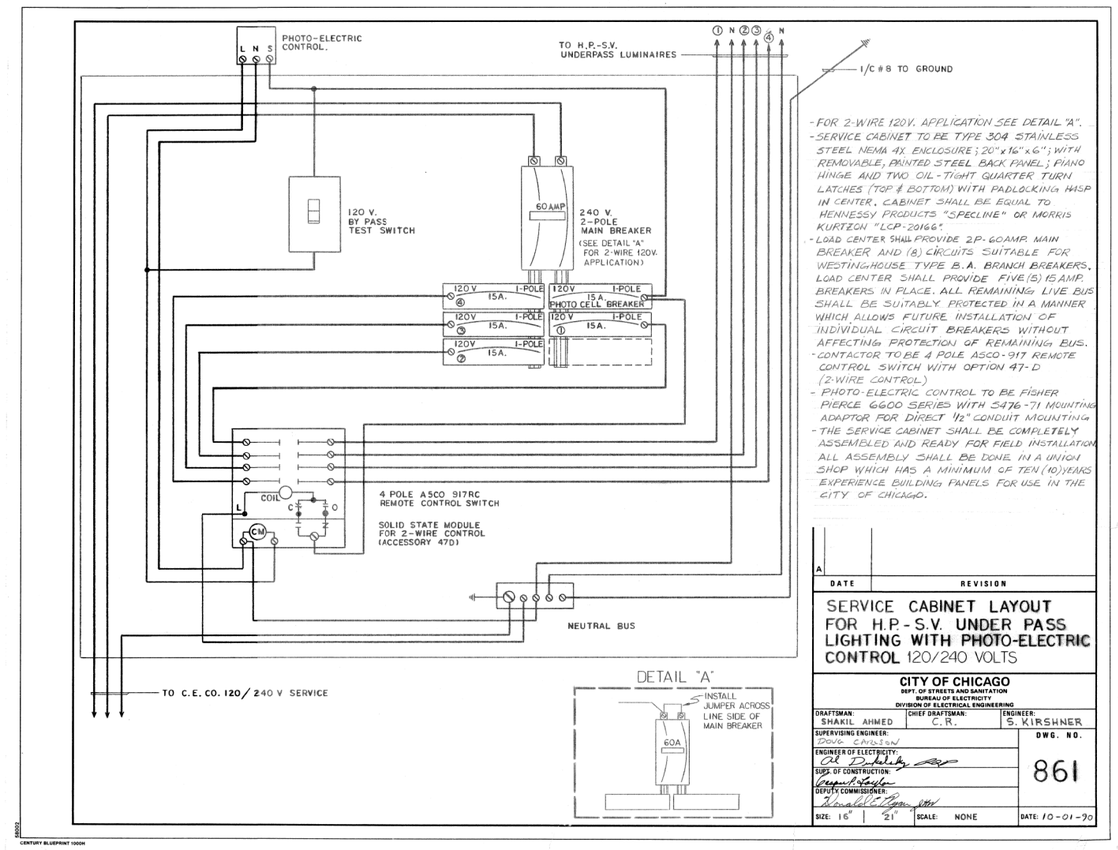

NOTES:

1. LIQUID TIGHT FLEXIBLE METAL CONDUIT, MAXIMUM LENGTH 6'-0", TYPICAL FOR EACH INSTANCE AS SHOWN, PROVIDE RIGID GALVANIZED STEEL CONDUIT AS REQUIRED NOT TO EXCEED 6'-0" OF FLEXIBLE LIQUID TIGHT METAL CONDUIT. LIQUID TIGHT FLEXIBLE METAL CONDUIT WILL BE INCLUDED IN THE COST OF THE UNDERPASS LUMINAIRE IT CONNECTS TO.
2. THE CONTRACTOR SHALL TILT PROPOSED UNDERPASS LUMINAIRES DOWN 20 DEGREES.

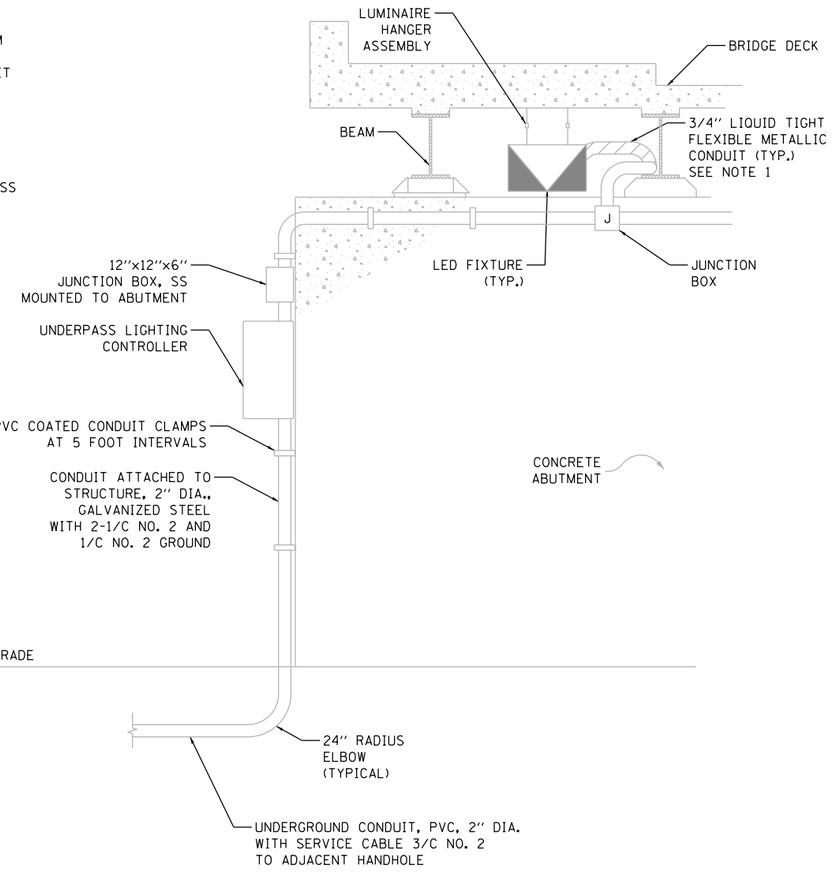

HANDHOLE TO JUNCTION BOX CONNECTION – LUMINIARE MOUNTING DETAIL – ELEVATION VIEW – FACING WEST

NTS

E–17

...\E5038-sht_elecltghtng17.dgn
11/29/2017 1:45:10 PM

DESIGN:	RAS			
DRAWN:	RAS			
CHECKED:	MKR			
APPROVED:				
DATE:	11/29/2017			
SCALE:	NTS			
FILE:	NO.	BY	DATE	DESCRIPTION
	REVISIONS			

KEY PLAN:

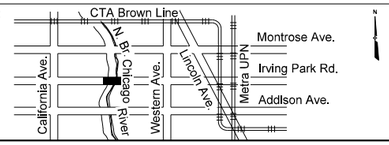

CDOT
CHICAGO DEPARTMENT OF TRANSPORTATION

EJM ENGINEERING, INC.
411 South Wells Street Suite 1000
Chicago, Illinois 60607

W. IRVING PARK ROAD AT NORTH BRANCH CHICAGO RIVER

UNDERPASS LIGHTING DETAILS

CDOT 17-032A

PROJECT NO. E-5-038

DRAWING NO. 17-032A

CONTRACT NO. XXXXX

DIMENSIONS AND WEIGHT

	SmartLume 1	SmartLume 2	SmartLume 3
L	19.2" | 487mm	23.9" | 607mm	28.6" | 727mm
H1	5.2" | 131mm	5.2" | 131mm	5.2" | 131mm
H2	6.4" | 162mm	6.4" | 162mm	6.4" | 162mm
l	13" | 330mm	13" | 330mm	13" | 330mm
Weight	14.3lbs | 6.5kg	16.5lbs | 7.5kg	18.7lbs | 8.5kg

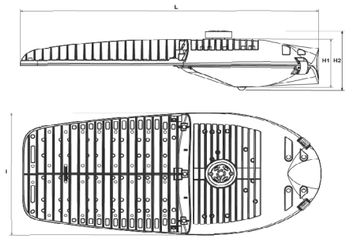

PHOTOMETRY

SmartLume Size 1 Neutral White (4000K)

Number of LEDs	Typical luminaire output flux (*)	Typical luminaire power consumption (120-277V)	Typical luminaire power consumption (347-480V)
12	4100lm	33W	-
	5500lm	48W	-

SmartLume Size 2 Neutral White (4000K)

Number of LEDs	Typical luminaire output flux (*)	Typical luminaire power consumption (120-277V)	Typical luminaire power consumption (347-480V)
24	7300lm	56W	55W
	8100lm	64W	62W
	9300lm	77W	74W
	10100lm	85W	83W
	11200lm	98W	96W
	12200lm	111W	-
36	13400lm	104W	108W
	14600lm	117W	120W
	16800lm	144W	144W
	17700lm	155W	-

SmartLume Size 3 Neutral White (4000K)

Number of LEDs	Typical luminaire output flux (*)	Typical luminaire power consumption (120-277V)	Typical luminaire power consumption (347-480V)
48	18500lm	148W	149W
	20000lm	166W	165W
	21400lm	183W	181W
60	23100lm	180W	188W
	26700lm	223W	227W
	28400lm	238W	248W
	30600lm	-	280W

(*) The flux is an indicative flux @ t_j 25°C based on LED manufacturer's data. The real flux output of the luminaire depends on environmental conditions (e.g. temperature and pollution) and the optical efficiency of luminaire.

CPD LUMINAIRE DETAILS

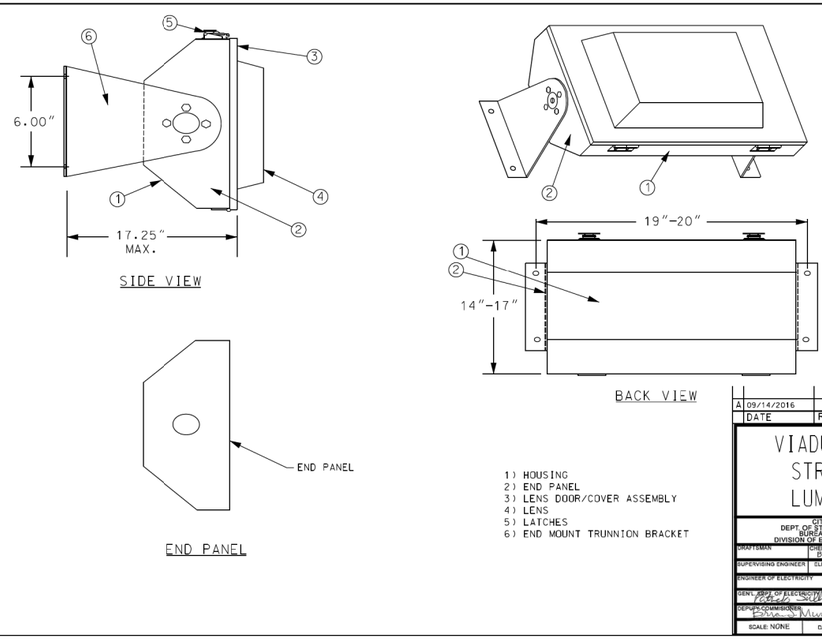

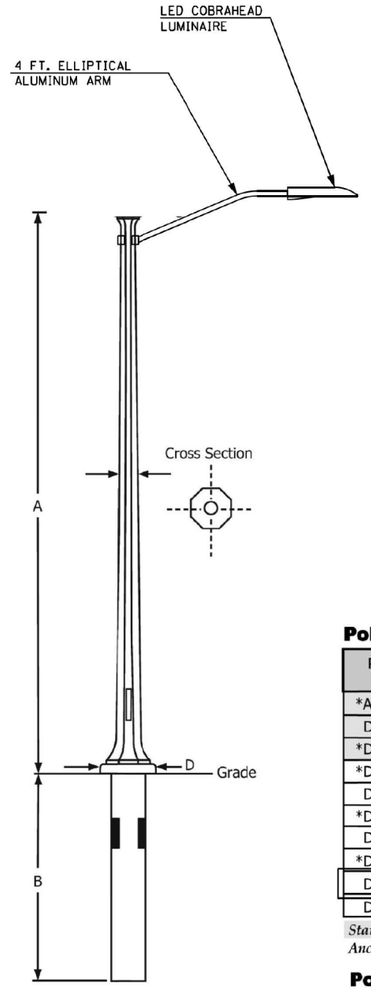

Typical Structural Detail

Tip for 710, 713, 715:

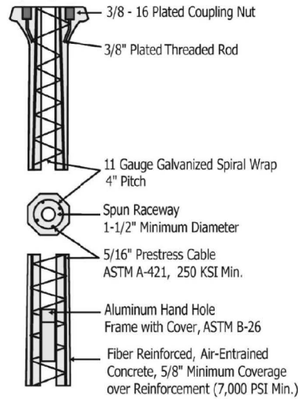

Tip for 712, 714, 720, 72 3:

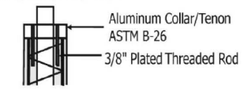

Pole Dimensions

Pole No.	Above Ground Height (A)	Burial Depth (B)	Tip Diameter (C)	Base Diameter (D)	Est. Pole Weight (lbs.)
*A701	20"	----	2"	5-1/2"	10
D703	42"	42"	4-3/4"	10"	175
*D706	6'	3'	6"	10"	175
*D710	10'	4' 6"	8-1/2"	18"	850
D712	12'	4'	5-1/2"	18"	875
*D713	13'	4'	8-1/2"	18"	900
D714	14'	4' 6"	5-1/2"	18"	925
*D715	15'	4' 6"	8-1/2"	18"	950
D720	20'	5'	6"	18"	1,400
D723	23'	5'	5-1/2"	18"	1,500

Static, cast-in-place. ** Pole has decorative flared top.*
Anchor Base units available upon request. Standard bolt circle is 15".

Pole Code

Standard Code: D723-MG-EA-C

Mounting Type	Series + Height Above Ground	Color	Finish	Sealer	Options
(D) Direct Burial	701	(SG) Sky Gray	(E) Etched	(A) Acrylic	(B) Banner Arm
(A) Anchor Base	703	(MS) Midnight Sky Black	(M) Mold	(W) Waterseal	(C) Clamp-on Arm
	706	(CB) Charcoal Black		(G) Anti-Graffiti	(G) Ground Lug
	710	(SP) Salt & Pepper			(I) Threaded Insert
	712	(AW) Alpine White			(O) Outlet
	713	(TC) Terra Cotta			(T) Tenon
	714	(RG) Red Granite			
	715	(RR) Rustic Red			
	720	(SR) Sedona Red			
	723	(ER) Earthtone Red			
		(AR) Antique Red			
		(KG) Kelly Green			

CPD POLE DETAILS

DESIGN: RAS				
DRAWN: RAS				
CHECKED: MKR				
APPROVED:				
DATE: 11/29/2017				
SCALE: NTS				
FILE:	NO.	BY	DATE	DESCRIPTION
	REVISIONS			

CDOT CHICAGO DEPARTMENT OF TRANSPORTATION

EJM ENGINEERING, INC.
411 South Wells Street Suite 1000
Chicago, Illinois 60607

W. IRVING PARK ROAD AT NORTH BRANCH CHICAGO RIVER

LIGHTING DETAILS SHARED-USE PATH

PROJECT NO. E-5-038

DRAWING NO. E-18

CONTRACT NO. XXXXX

11/29/2017 1:45:15 PM ...\E5038-sht_elecltghtng18.dgn

TOTAL SHEETS	SHEET NO.
184	101

Bench Mark: 1) Chiseled plus cut in north sidewalk along Irving Park Rd., approximately 400' west of S.N. 016-6082 West Abutment, Elevation 12.86 CCD.

Existing Structure: Structure No. 016-6082, which carries IL Route 19 over the North Branch Chicago River, was originally built in 1914 and widened in 1951. The bridge is a fixed, three-span, steel girder structure with floor beams, stringers, a 6½" thick concrete deck and an asphalt overlay. A simple center span rests on expansion bearings at ship-lap joints located on the two end span girders which cantilever over the piers. The total length, back to back of abutments, is 185'-0". The spans are 50'-0", 80'-0", and 50'-0". The out-to-out width of the structure is 82'-0", and the face-to-face curb width is 67'-6". The 12 in. high raised, superimposed sidewalk is 7'-6" wide at each side of the superstructure. A 3'-0" wide raised median separates the two eastbound and two westbound lanes. The existing structure and approaches are built on a tangent alignment.

The wingwalls are monolithic with the abutments. The closed abutment wall is turned at 45° toward the approach at the bearing of the originally installed girders. Columns were added near the abutments to support the fascia girders added in 1951. The original piers consist of two circular concrete columns supported by timber piles. The columns are joined by a 3'-0" wide tie girder. Concrete pier columns were added as part of the 1951 widening to support the additional girders. The added columns are supported by 4'-6" diameter caissons embedded into solid rock. The slope in front of the abutments consists of bare earth varying in elevation. There is a discharge culvert with a concrete headwall through the middle of both abutments. The substructure is not skewed. The bridge will be replaced utilizing staged construction, maintaining two lanes of traffic in each direction in each stage.

No salvage.

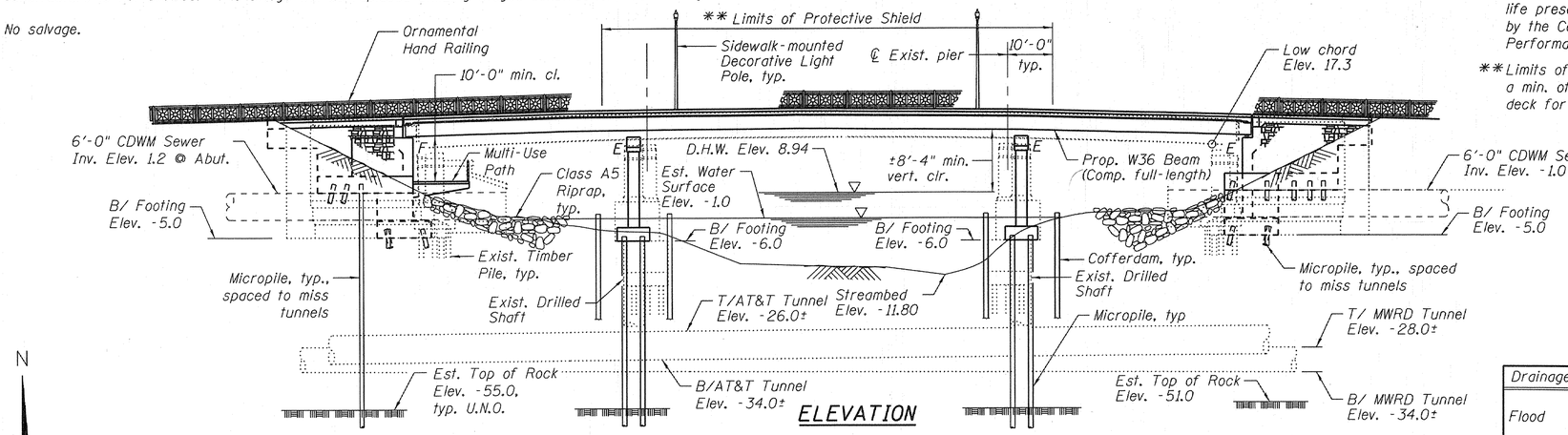

ELEVATION

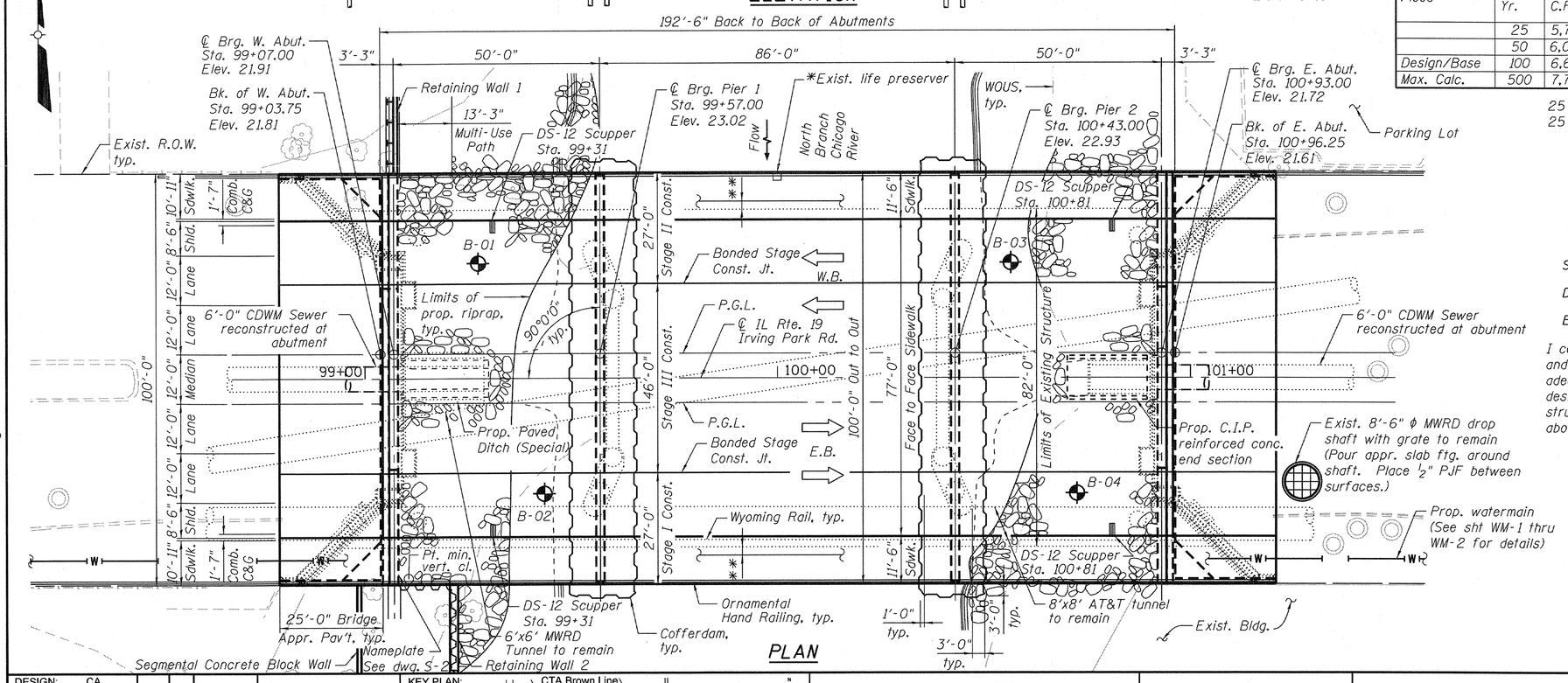

PLAN

NOTES

1. Elevations refer to City of Chicago Datum U.N.O.

LEGEND

⊕ B-0X = Soil Boring Location and Identifier

*Contractor shall remove, store, and reinstall life preserver cabinet on supports as directed by the Commissioner. Cost included with High Performance Concrete Superstructure.

**Limits of Protective Shield shall extend a min. of 2'-0" beyond edge of exist. deck for limits shown.

LOADING HL-93

25 psf Future Wearing Surface

DESIGN SPECIFICATIONS

2014 AASHTO LRFD Bridge Design Specifications, 7th Edition, with 2015 Interim Revisions

2009 AASHTO LRFD Guide Specifications for the Design of Pedestrian Bridges, 2nd Edition, with 2015 Interim Revisions

DESIGN STRESSES

FIELD UNITS

f'c = 4,000 psi High Performance
fy = 60,000 psi (Reinforcement)
fy = 50,000 psi (AASHTO M270 Grade 50)

SEISMIC DATA

Seismic Performance Zone (SPZ) = 1
Design Spectral Acceleration at 1.0 sec (S_{D1}) = 0.060g
Design Spectral Acceleration at 0.2 sec (S_{DS}) = 0.106g
Soil Site Class = C

DESIGN SCOUR ELEVATION TABLE

Event / Limit State	Design Scour Elevations (ft.) W. Abut.	Pier 1	Pier 2	E. Abut.	Item 113
Q100	-2.6	-11.7	-11.7	-2.6	5
Q500	-2.6	-11.6	-11.6	-2.6	
Design	-2.6	-11.7	-11.7	-2.6	
Check	-2.6	-11.6	-11.6	-2.6	

WATERWAY INFORMATION

Drainage Area = 141.6 sq. mi. Low Grade Elev. 11.5 CCD/590.98 NGVD29 @ Sta. 103+70

Flood	Freq. Yr.	Q C.F.S.	Opening Sq. Ft. Exist.	Prop.	Nat. H.W.E. CCD	Nat. H.W.E. NGVD29	Head - Ft. Exist.	Prop.	Headwater El. CCD Exist.	Prop.	Headwater El. NGVD29 Exist.	Prop.
	25	5,700	1,645	2,006	7.35	586.83	0.04	0.03	7.39	7.38	586.87	586.86
	50	6,047	1,736	2,123	8.04	587.52	0.05	0.03	8.09	8.07	587.57	587.55
Design/Base	100	6,605	1,862	2,277	8.94	588.42	0.05	0.03	8.99	8.97	588.47	588.45
Max. Calc.	500	7,720	2,074	2,526	10.34	589.82	0.05	0.04	10.39	10.38	589.87	589.86

25 year velocity through Existing Bridge = 3.28 fps
25 year velocity through Prop. Bridge = 3.18 fps

DANIEL S. FLICK
081-007107
LICENSED STRUCTURAL ENGINEER
STATE OF ILLINOIS

SIGNED: Dan Flick
DATE: OCTOBER 20, 2017
EXPIRES: November 30, 2018

I certify that to the best of knowledge, information and belief, this bridge design is structurally adequate for the design loading on the plans. The design is an economical one for the style of structure and complies with requirements of the above AASHTO Design Specifications.

APPROVED
FOR STRUCTURAL ADEQUACY ONLY
Engineer of Bridges and Structures

Range 13E | Range 14E
3rd PM

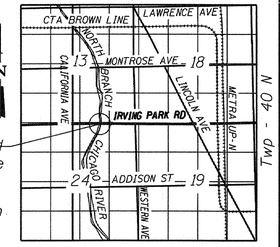

Proposed Structure

LOCATION SKETCH

DESIGN:	CA			
DRAWN:	MTR			
CHECKED:	SF			
APPROVED:	DF			
DATE:	10/20/2017			
SCALE:				
FILE:	NO.	BY	DATE	DESCRIPTION
	REVISIONS			

KEY PLAN:

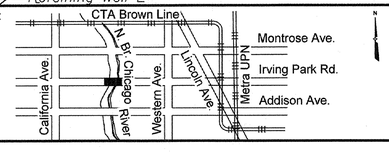

CDOT
CHICAGO DEPARTMENT OF TRANSPORTATION

BOWMAN, BARRETT & ASSOCIATES INC.
CONSULTING ENGINEERS
Chicago, Illinois
312.228.0100
www.bbandainc.com

W. IRVING PARK ROAD AT NORTH BRANCH CHICAGO RIVER

GENERAL PLAN & ELEVATION
STRUCTURE NO. 016-6090
PUBLIC WATERS

PROJECT NO. E-5-038
DRAWING NO. S-1
CONTRACT NO. XXXXX

...\0166090-E5038-001-GPE.dgn
11/6/2017 3:48:03 PM

TOTAL SHEETS	SHEET NO.
184	102

GENERAL NOTES

Fasteners shall be ASTM A325 Type 1, mechanically galvanized bolts (in painted areas. Bolts $^{3}/_{4}$ in. ϕ, holes $^{15}/_{16}$ in. ϕ, unless otherwise noted.

Calculated weight of Structural Steel = 518,415 pounds.

No field welding is permitted except as specified in the contract documents.

Reinforcement bars designated (E) shall be epoxy coated.

Bearing seat surfaces shall be constructed or adjusted to the designated elevations within a tolerance of $^{1}/_{8}$ inch (0.01 ft.). Adjustment shall be made either by grinding the surface or by shimming the bearings.

Protective Concrete Sealer shall be applied to the abutment backwalls, bearing seats, and front face of each abutment, top surface of bridge decks, sidewalks, approach slabs, and face and top surface of special curb.

The organic Zinc Rich Primer / Epoxy / Urethane Paint System shall be used for painting of new structural steel except where otherwise noted. The entire system shall be shop applied, with the exception of the exterior surface and the bottom of the bottom flange of fascia beams, masked off connection surfaces, field installed fasteners and damaged areas shall be touched up in the field. The color of the final finish coat for all interior and exterior beam surfaces shall be Sherwin Williams Standard Clossy Color SW 2717 (Bordeaux).

This project requires a US Army Corps of Engineers 404 permit. See Roadway General Notes. In stream work plan will be requried depicting any work within the Waters of the US (WOUS) noted on the plans. The Contractor shall develop and submit the instream work plans as described in the General Notes on sheet GEN-2.

INDEX OF STRUCTURAL SHEETS

S-1	General Plan & Elevation	S-31	East Abutment Removal Details
S-2	General Data	S-32	East Abutment Plan and Elevation
S-3	Construction Staging	S-33	East Abutment Footing Plan I
S-4	Substructure Layout	S-34	East Abutment Footing Plan II
S-5	Temporary Concrete Barrier for Stage Construction	S-35	East Abutment Footing Plan III
S-6	Top of Slab Elevations I	S-36	East Abutment Wingwall Details
S-7	Top of Slab Elevations II	S-37	East Abutment Sections and Details I
S-8	Top of Slab Elevations III	S-38	East Abutment Sections and Details II
S-9	Top of Slab Elevations IV	S-39	NE Wingwall Repair Details
S-10	Top of Slab Elevations V	S-40	West Abutment Removal Details
S-11	Top of West Approach Slab Elevations	S-41	West Abutment Plan and Elevation
S-12	Top of East Approach Slab Elevations	S-42	West Abutment Footing Plan I
S-13	Superstructure Plan and Cross Section	S-43	West Abutment Footing Plan II
S-14	Superstructure Details I	S-44	West Abutment Wingwall Details
S-15	Superstructure Details II	S-45	West Abutment Sections and Details I
S-16	Ornamental Hand Rail Architectural Plan and Elevations	S-46	West Abutment Sections and Details II
S-17	Ornamental Hand Rail Architectural Plan and Elevations	S-47	West Abutment Sections and Details III
S-18	Ornamental Hand Railing Details	S-48	SW Wingwall Repair Details
S-19	Wyoming Railing Details I	S-49	Multi-Use Path Details
S-20	Wyoming Railing Details II	S-50	Pier 1 & 2 Removal Details
S-21	Wyoming Railing Details III	S-51	Pier 1 Plan and Elevation
S-22	Bridge Approach Slab Plan	S-52	Pier 1 Footing Plan & Details
S-23	Bridge Approach Slab Details	S-53	Pier 2 Plan and Elevation
S-24	Preformed Joint Strip Seal	S-54	Pier 2 Footing Plan & Details
S-25	Drainage Scupper, DS-12	S-55	Pier 1 & 2 Details
S-26	Temporary Sidewalk Support System	S-56	Micropile Details
S-27	Framing Plan	S-57	Bar Splicer Assembly and Mechanical Splicer Details
S-28	Framing Details	S-58	Soil Boring Logs I
S-29	Beam Details	S-59	Soil Boring Logs II
S-30	Bearing Details	S-60	Soil Boring Logs III
		S-61	Soil Boring Logs IV

TOTAL BILL OF MATERIAL

ITEM	UNIT	SUPER	SUB	TOTAL
Stone Riprap, Class A5	Sq Yd	-	600	600
Filter Fabric	Sq Yd	-	600	600
Removal of Existing Structures	Each	1	-	1
Cofferdam Excavation	Cu Yd	-	493	493
Cofferdam (Type 1) (Location - 1)	Each	-	1	1
Cofferdam (Type 1) (Location - 2)	Each	-	1	1
High Performance Concrete Structures	Cu Yd	-	1,552.6	1,552.6
High Performance Concrete Superstructures	Cu Yd	951.4	-	951.4
Bridge Deck Grooving	Sq Yd	1,986	-	1,986
Protective Concrete Sealer	Sq Yd	2,800	627	3,427
Furnishing and Erecting Structural Steel	L Sum	1	-	1
Stud Shear Connectors	Each	13,020	-	13,020
Reinforcement Bars, Epoxy Coated	Pound	203,580	116,530	320,110
Bar Splicers	Each	1,966	990	2,956
Name Plates	Each	1	-	1
Preformed Joint Strip Seal	Foot	202	-	202
Elastomeric Bearing Assembly, Type II	Each	42	-	42
Anchor Bolts, $^{5}/_{8}$"	Each	28	-	28
Anchor Bolts, $1^{1}/_{4}$"	Each	84	-	84
Permanent Sheet Piling	Sq Ft	-	580	580
Geocomposite Wall Drain	Sq Yd	-	486	486
Controlled Low-Strength Material	Cu Yd	-	34	34
Micro-piles	Each	-	154	154
Micropile Load Test	Each	-	4	4
Micropile Proof Load Test	Each	-	12	12
Braced Excavation	Cu Yd	-	2,075	2,075
Ornamental Railing	Foot	653	-	653
Granular Backfill For Structures	Cu Yd	-	1,066	1,066
Latex Concrete Overlay For New Bridge Deck, $2^{1}/_{4}$"	Sq Yd	2,001	-	2,001
Steel Railing (Special)	Foot	795	-	795
Temporary Sidewalk	Sq Ft	963	-	963
Drainage Scupper, DS-12	Each	4	-	4
Pipe Underdrains for Structures 4"	Foot	-	350	350
Protective Shield	Sq Yd	1,225	-	1,225
Concrete Structures (Retaining Wall)	Cu Yd	-	27	27
Concrete Removal	Cu Yd	-	30	30
Handrail Removal	Foot	-	133	133
Structural Repair of Concrete (Depth Equal to or Less than 5")	Sq Ft	-	27	27
Structure Excavation	Cu Yd	-	95	95

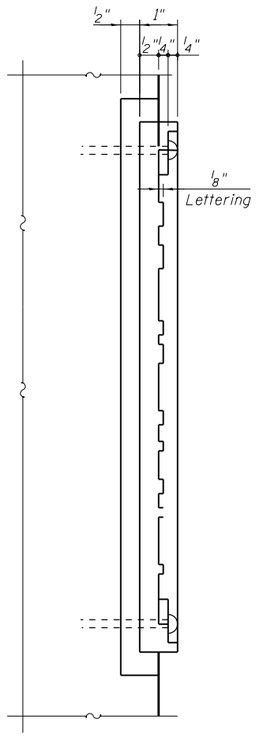

SECTION A-A

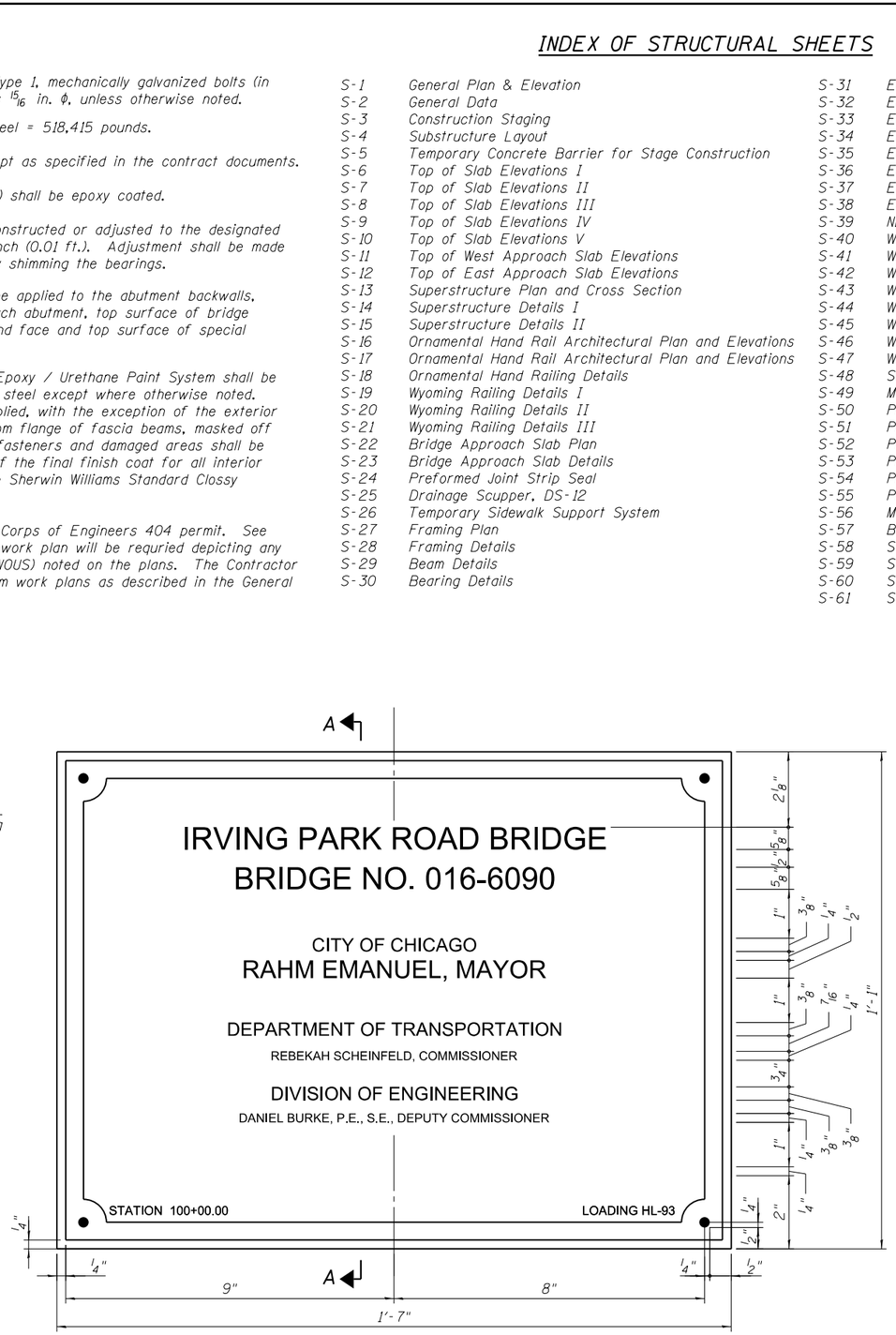

NAME PLATE

Notes for Nameplate:

1. All letters to be Helvetica medium.
2. All letters and borders to have satin finish.
3. Plaque background to have pebble texture.
4. Plaque finish to be antique bronze color.
5. Provide bronze button-head tamper resistant threaded studs with expansion anchors.
6. Text to be coordinated with the City before fabrication.
7. Work in conjuction with IDOT Standard 515001.
8. Nameplate shall be located on face of the W. Abutment. Contractor shall coordinate Final position with the Commissioner prior to placement.

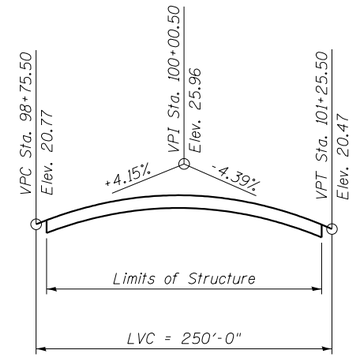

PROFILE GRADE

(6' Offset from ℄ IL Rte. 19 Irving Park Rd.)

...\0166090-E5038-002-GD.dgn
11/29/2017 1:46:08 PM

DESIGN: CA				
DRAWN: MTR				
CHECKED: SF				
APPROVED: DF				
DATE: 11/29/2017				
SCALE:				
FILE:	NO.	BY	DATE	DESCRIPTION
	REVISIONS			

KEY PLAN:

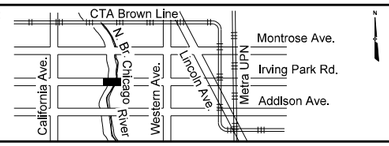

CDOT
CHICAGO DEPARTMENT OF TRANSPORTATION

BOWMAN, BARRETT & ASSOCIATES INC.
CONSULTING ENGINEERS
Chicago, Illinois
312.228.0100
www.bbandainc.com

W. IRVING PARK ROAD AT NORTH BRANCH CHICAGO RIVER

GENERAL DATA
STRUCTURE NO. 016-6090

PROJECT NO.	E-5-038
DRAWING NO.	S-2
CONTRACT NO.	XXXXX

TOTAL SHEETS	SHEET NO.
184	103

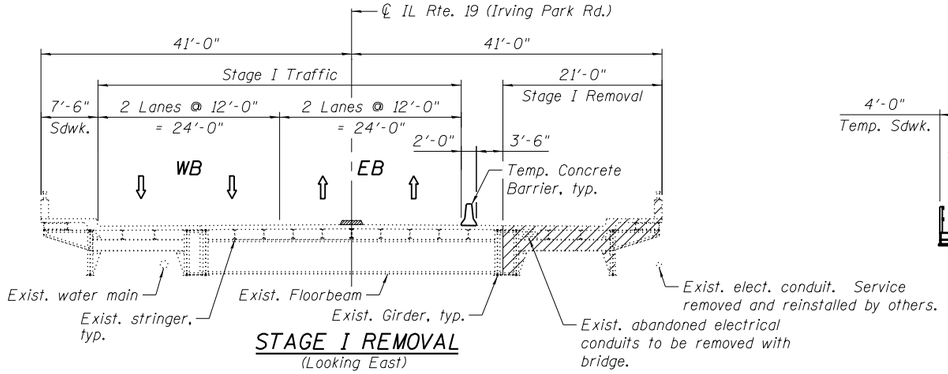

STAGE I REMOVAL
(Looking East)

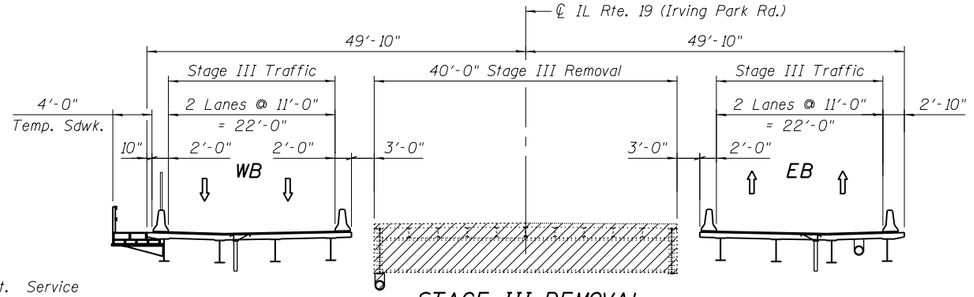

STAGE III REMOVAL
(Looking East)

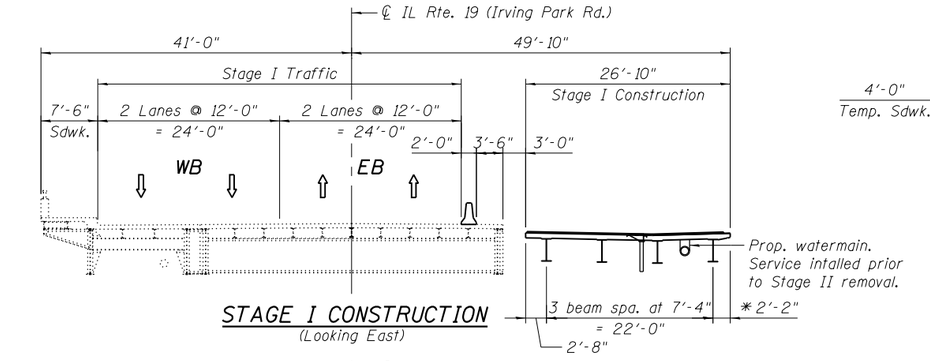

STAGE I CONSTRUCTION
(Looking East)

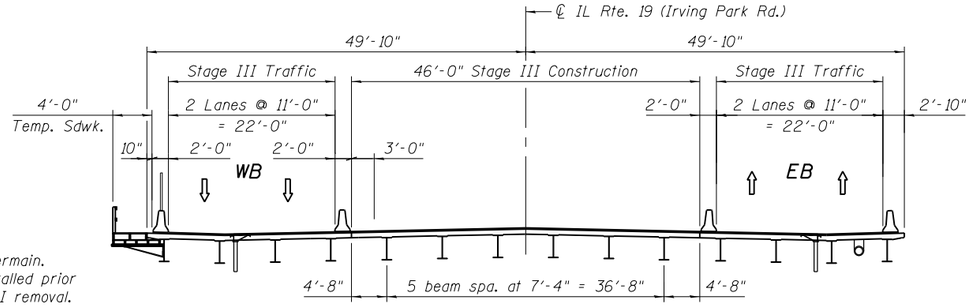

STAGE III CONSTRUCTION
(Looking East)

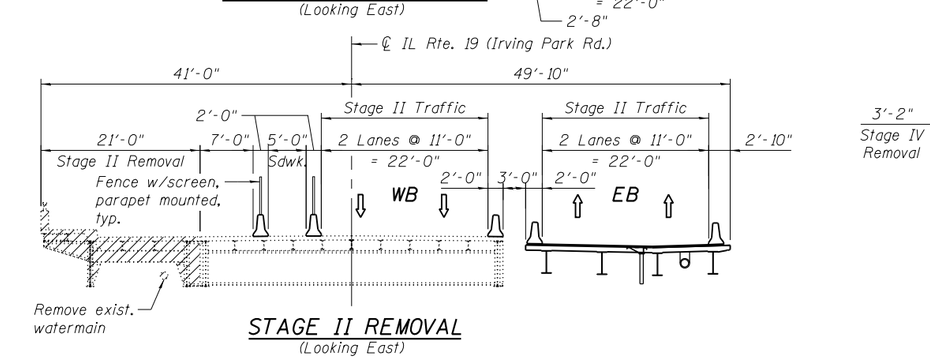

STAGE II REMOVAL
(Looking East)

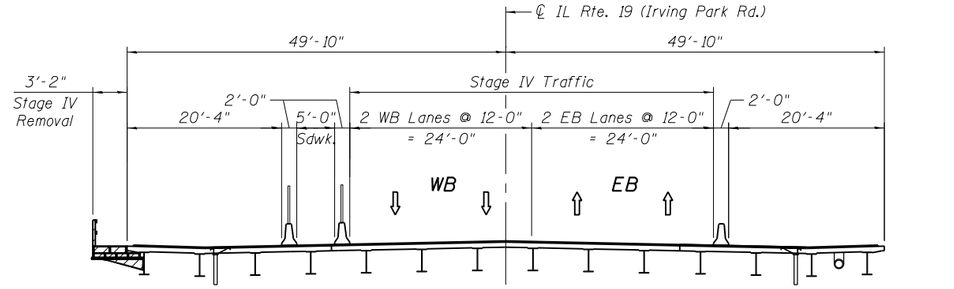

STAGE IV REMOVAL
(Looking East)

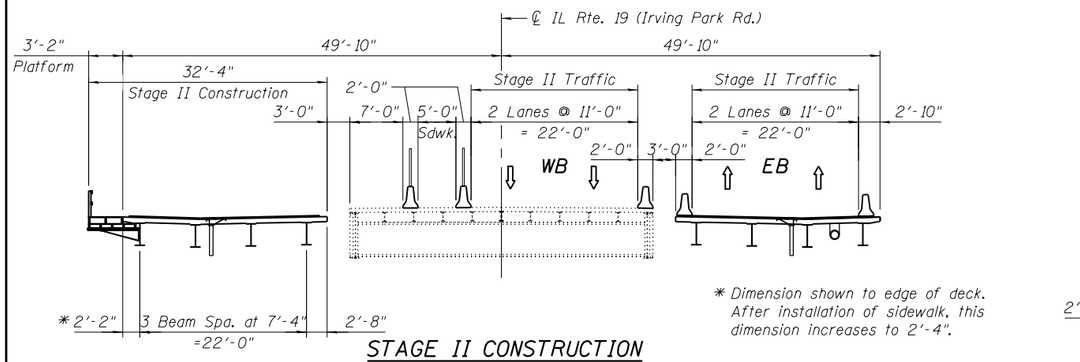

* Dimension shown to edge of deck. After installation of sidewalk, this dimension increases to 2'-4".

STAGE II CONSTRUCTION
(Looking East)

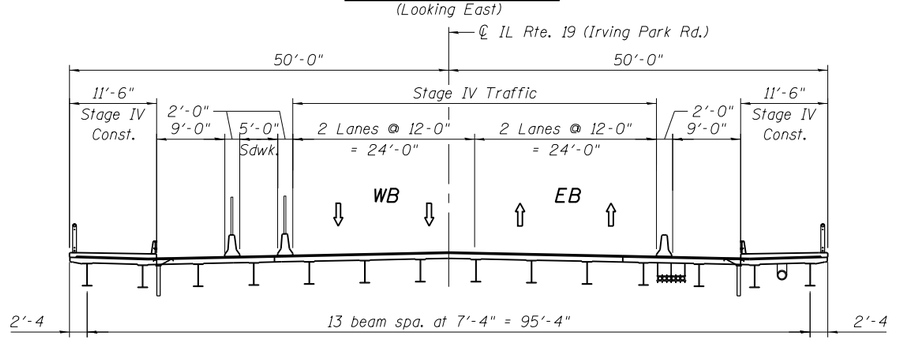

STAGE IV CONSTRUCTION
(Looking East)

LEGEND

Removal of Existing Structures

NOTES

1. See dwg. S-26 for temporary sidewalk details.
2. See MOT plans for additional details.
3. See dwg. S-5 for temporary concrete barrier details.

...\0166090-E5038-003-CS.dgn
11/29/2017 1:46:10 PM

DESIGN: CA				
DRAWN: MTR				
CHECKED: SF				
APPROVED: DF				
DATE: 11/29/2017				
SCALE:				
FILE:	NO.	BY	DATE	DESCRIPTION
	REVISIONS			

KEY PLAN:

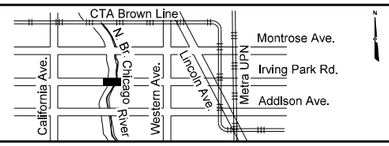

CDOT
CHICAGO DEPARTMENT OF TRANSPORTATION

BOWMAN, BARRETT & ASSOCIATES INC.
CONSULTING ENGINEERS
Chicago, Illinois
312.228.0100
www.bbandainc.com

W. IRVING PARK ROAD AT NORTH BRANCH CHICAGO RIVER

CONSTRUCTION STAGING
STRUCTURE NO. 016-6090

PROJECT NO.	E-5-038
DRAWING NO.	S-3
CONTRACT NO.	XXXXX

TOTAL SHEETS	SHEET NO.
184	104

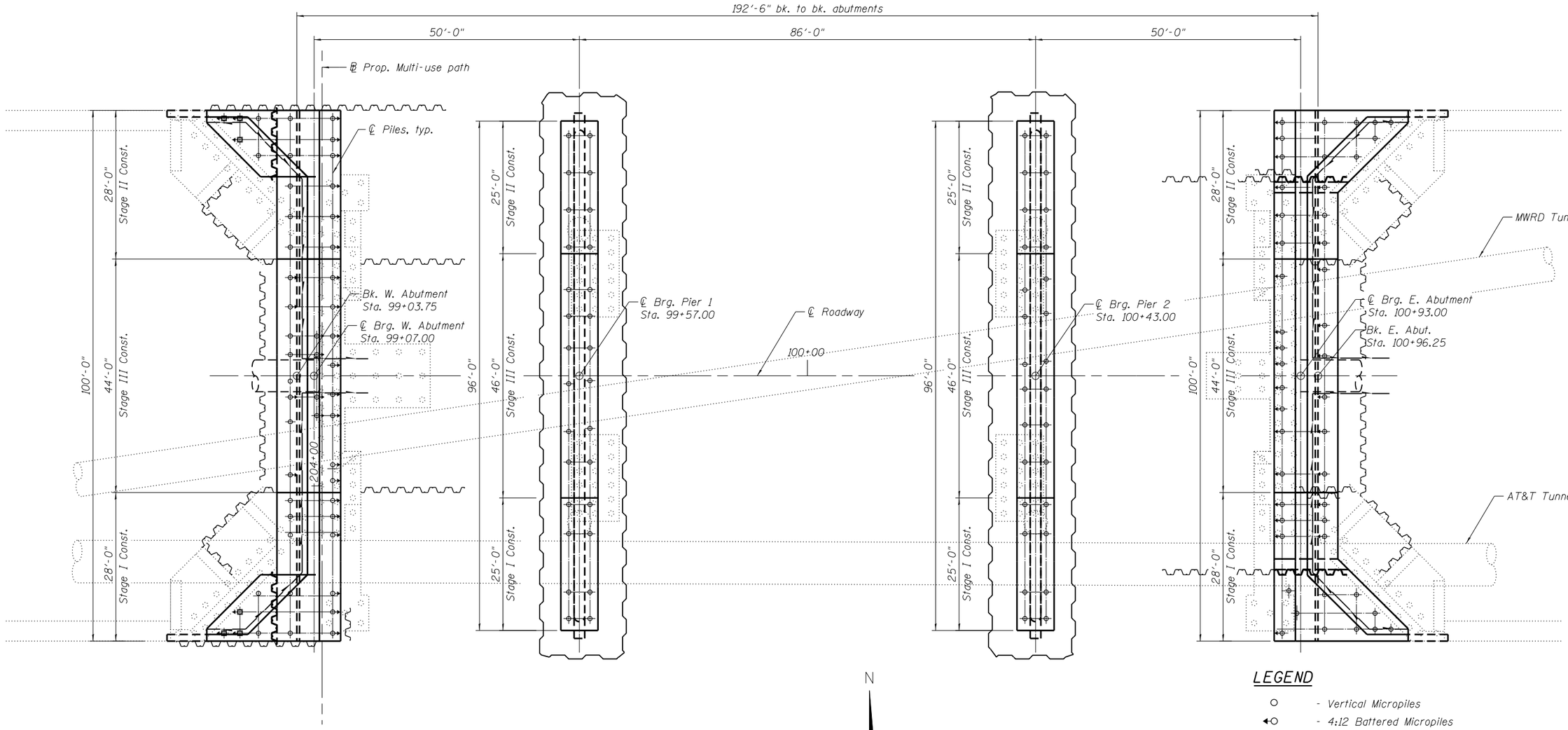

PLAN

N

LEGEND

- ○ - Vertical Micropiles
- ◂○ - 4:12 Battered Micropiles
- ◂□ - 4:12 Battered Micropiles with Top Plate
- ∿∿∿ - Temporary Soil Retention System
- ∿∿∿ - Permanent Sheet Piling
- ∿∿∿ - Cofferdam
- —— - Pipe Underdrain for Structures, 4"

Notes:

For Micropile spacings at Prop. Abutments and Wingwalls, see Drawing Nos. S-33 and S-42.

For Micropile spacings at Prop. Piers, see Drawing Nos. S-52 and S-54.

For Pier Removal Details see Drawing No. S-50.

For Abutment Removal Details see Drawing No. S-31 and S-40.

DESIGN: SF				
DRAWN: MTR				
CHECKED: DF				
APPROVED: DF				
DATE: 11/29/2017				
SCALE:				
FILE:	NO.	BY	DATE	DESCRIPTION
	REVISIONS			

KEY PLAN:

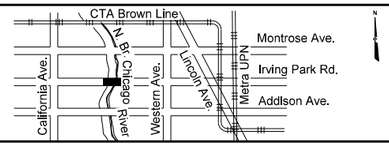

CDOT
CHICAGO DEPARTMENT OF TRANSPORTATION

BOWMAN, BARRETT & ASSOCIATES INC.
CONSULTING ENGINEERS
Chicago, Illinois
312.228.0100
www.bbandainc.com

W. IRVING PARK ROAD AT NORTH BRANCH CHICAGO RIVER

SUBSTRUCTURE LAYOUT
STRUCTURE NO. 016-6090

PROJECT NO. E-5-038

DRAWING NO. S-4

CONTRACT NO. XXXXX

11/29/2017 1:46:12 PM ...\0166090-E5038-004-SL.dgn

TOTAL SHEETS	SHEET NO.
184	105

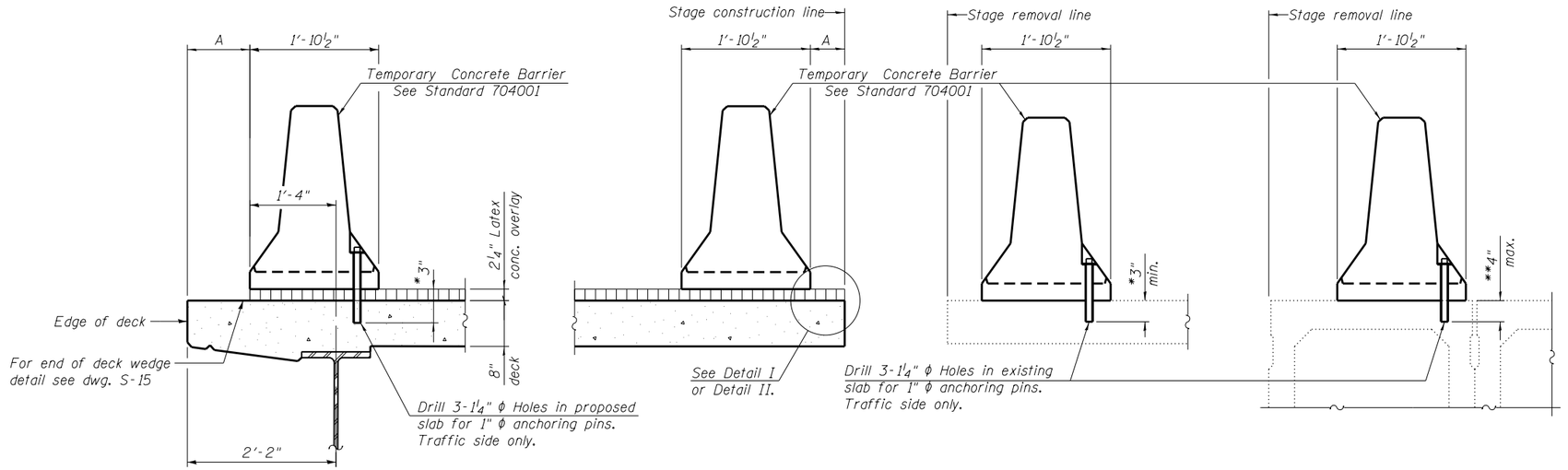

NEW SLAB AT OUTSIDE EDGE | NEW SLAB AT STAGE LINE | EXISTING SLAB | EXISTING DECK BEAM

When "A" is 3'-1" or less, the temporary concrete barrier shall be anchored to the new slab according to Detail I or Detail II. No anchorage is required when "A" is greater than 3'-1".

SECTIONS THRU SLAB OR DECK BEAM

* Dimension shown is minimum required embedment into concrete. If hot-mix asphalt wearing surface is present, minimum embedment shall be in addition to wearing surface depth.

** If existing deck beam is to remain in place after stage construction, embedment shall only be into wearing surface and not into existing deck beam concrete.

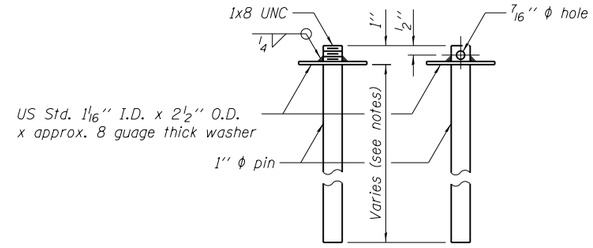

RESTRAINING PIN

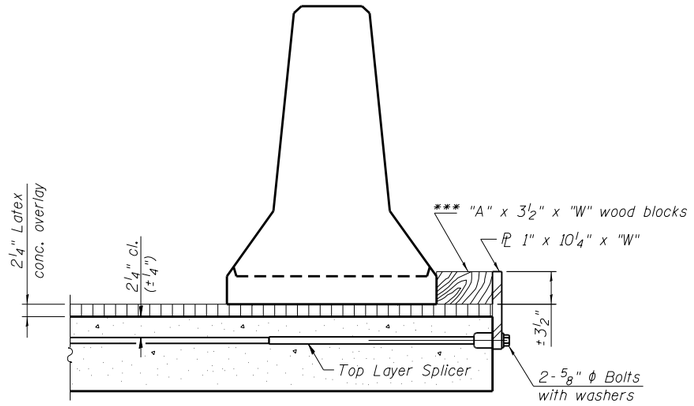

DETAIL I

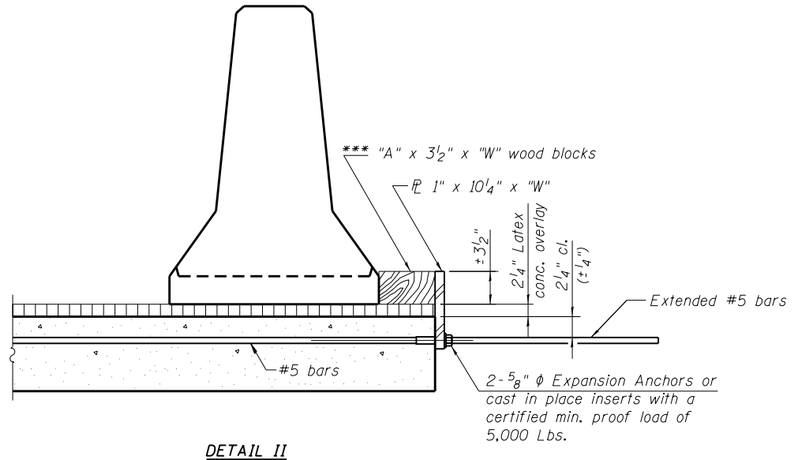

DETAIL II

RETAINER ASSEMBLY

*** Wood blocks may be omitted when required to provide minimum stage traffic lane width. When the wood blocks are omitted, the concrete barrier shall be in direct contact with the steel retainer plate.

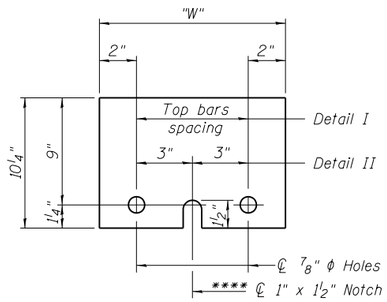

STEEL RETAINER ℄ 1" x 10¼" x "W"

***** Required only with Detail II

NOTES

Detail I - With Bar Splicer or Couplers:
Connect one (1) 1" x 10¼" x "W" steel ℄ to the top layer of couplers with 2-⅝" ϕ bolts screwed to coupler at approximate ℄ of each barrier panel.

Detail II - With Extended Reinforcement Bars:
Connect one (1) 1" x 10¼" x "W" steel ℄ to the concrete slab or concrete wearing surface with 2-⅝" ϕ Expansion Anchors or cast in place inserts spaced between the top layer of reinforcement at approximate ℄ of each barrier panel.

Cost of retainer assembly is included with Temporary Concrete Barrier.

The 1" x 10¼" x "W" plate shall not be removed until stage II construction forms and all reinforcement bars are in place and the concrete is ready to be placed.

...\0166090-E5038-005-TCB.dgn
11/29/2017 1:46:15 PM

DESIGN: CA				
DRAWN: LAM				
CHECKED: DF				
APPROVED: DF				
DATE: 11/29/2017				
SCALE:				
FILE:	NO.	BY	DATE	DESCRIPTION
	REVISIONS			

KEY PLAN:

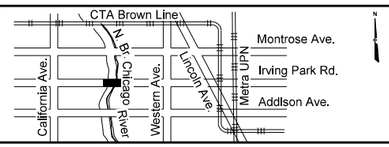

CDOT
CHICAGO DEPARTMENT OF TRANSPORTATION

BOWMAN, BARRETT & ASSOCIATES INC.
CONSULTING ENGINEERS
Chicago, Illinois
312.228.0100
www.bbandainc.com

W. IRVING PARK ROAD AT NORTH BRANCH CHICAGO RIVER

TEMPORARY CONCRETE BARRIER FOR STAGE CONSTRUCTION STRUCTURE NO. 016-6090

PROJECT NO. E-5-038
DRAWING NO. S-5
CONTRACT NO. XXXXX

TOTAL SHEETS	SHEET NO.
184	106

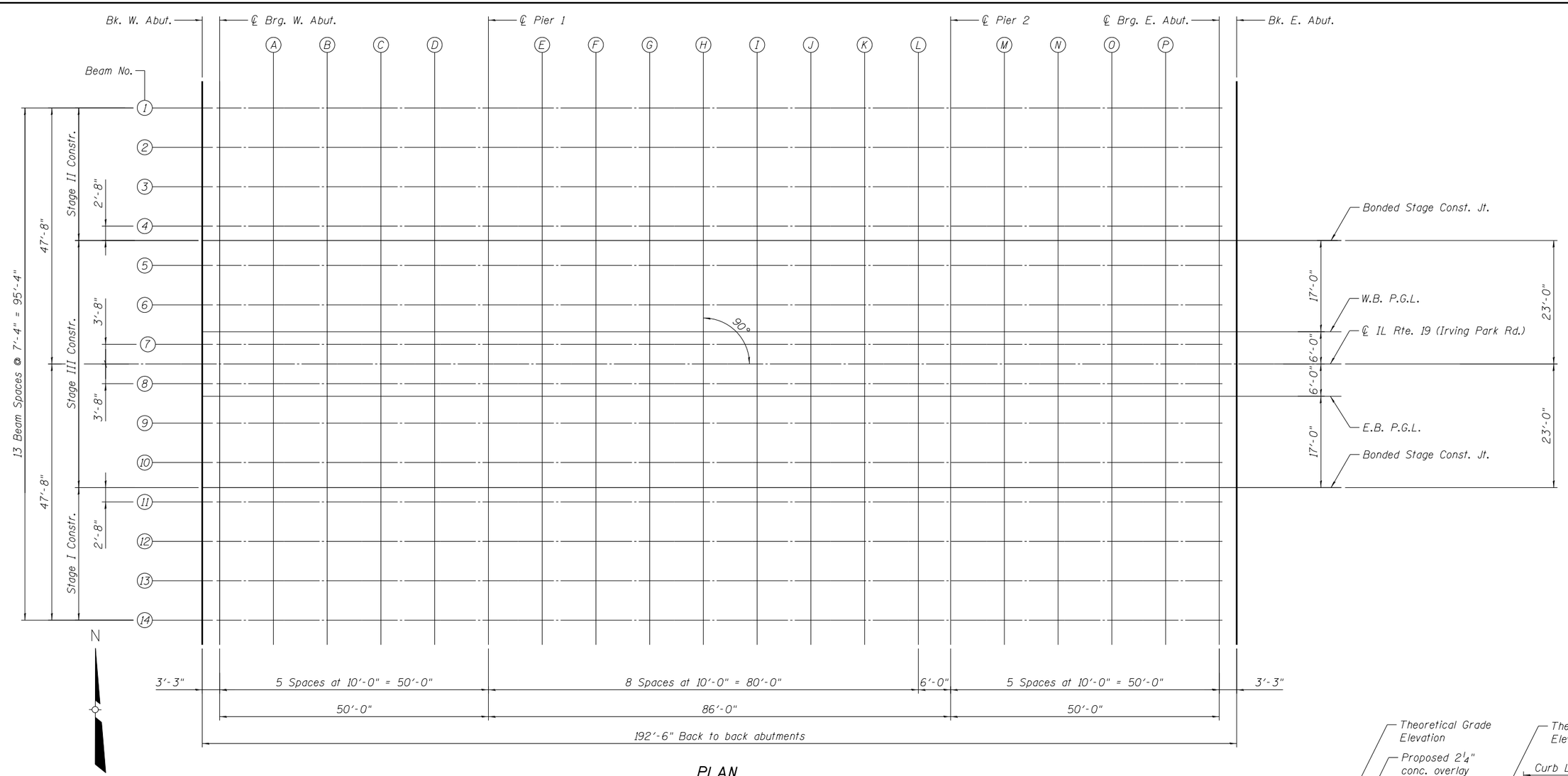

PLAN

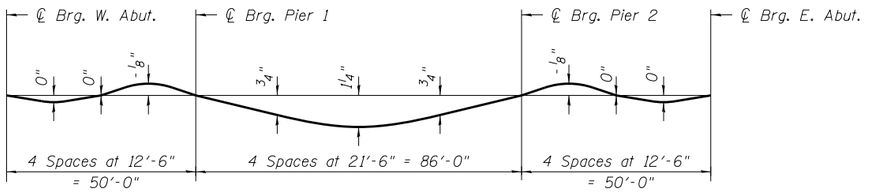

DEAD LOAD DEFLECTION DIAGRAM

(Includes weight of concrete including concrete overlay only)

Note:
The above deflections are not to be used in the field if the engineer is working from the grade elevations adjusted for dead load deflections as shown on Drawing No. S-7 thru S-10

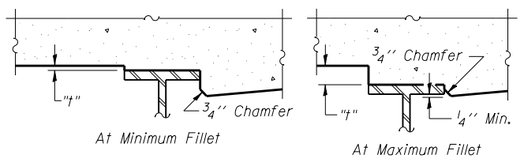

To determine "t": After all structural steel has been erected, elevations of the top flanges of the beams shall be taken at intervals shown above. These elevations subtracted from the "Theoretical Grade Elevations Adjusted for Dead Load Deflection" shown on Drawing no. S-7 thru S-10, minus slab thickness, equals the fillet heights "t" above top flange of beams.

FILLET HEIGHTS

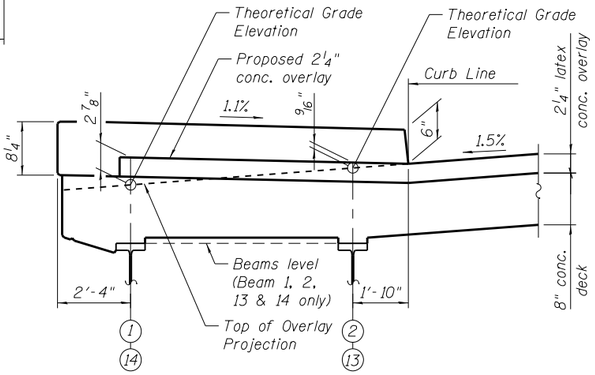

SECTION THRU SIDEWALK

(Looking East)

...\0166090-E5038-006-SE01.dgn
11/29/2017 1:46:17 PM

DESIGN: CA				
DRAWN: MTR				
CHECKED: DF				
APPROVED: DF				
DATE: 11/29/2017				
SCALE:				
FILE:	NO.	BY	DATE	DESCRIPTION
	REVISIONS			

KEY PLAN:

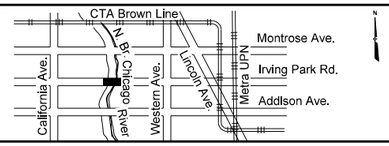

CDOT
CHICAGO DEPARTMENT OF TRANSPORTATION

BOWMAN, BARRETT & ASSOCIATES INC.
CONSULTING ENGINEERS
Chicago, Illinois
312.228.0100
www.bbandainc.com

W. IRVING PARK ROAD AT NORTH BRANCH CHICAGO RIVER

TOP OF SLAB ELEVATIONS I STRUCTURE NO. 016-6090

PROJECT NO. E-5-038
DRAWING NO. S-6
CONTRACT NO. XXXXX

TOTAL SHEETS	SHEET NO.
184	107

BEAM 1

Location	Station	*Offset	Theoretical Grade Elevations	Theoretical Grade Elevations Adjusted For Dead Load Deflection
Bk. W. Abut.	99+03.75	-47.67	21.18	21.18
℄ Brg. W. Abut.	99+07.00	-47.67	21.28	21.28
A	99+17.00	-47.67	21.57	21.58
B	99+27.00	-47.67	21.83	21.83
C	99+37.00	-47.67	22.05	22.05
D	99+47.00	-47.67	22.24	22.23
℄ Pier 1	99+57.00	-47.67	22.39	22.39
E	99+67.00	-47.67	22.51	22.54
F	99+77.00	-47.67	22.60	22.66
G	99+87.00	-47.67	22.65	22.74
H	99+97.00	-47.67	22.67	22.77
I	100+07.00	-47.67	22.65	22.75
J	100+17.00	-47.67	22.60	22.68
K	100+27.00	-47.67	22.51	22.56
L	100+37.00	-47.67	22.39	22.42
℄ Pier 2	100+43.00	-47.67	22.31	22.31
M	100+53.00	-47.67	22.13	22.12
N	100+63.00	-47.67	21.92	21.92
O	100+73.00	-47.67	21.68	21.68
P	100+83.00	-47.67	21.40	21.41
℄ Brg. E. Abut.	100+93.00	-47.67	21.09	21.09
Bk. E. Abut.	100+96.25	-47.67	20.98	20.98

BEAM 2

Location	Station	*Offset	Theoretical Grade Elevations	Theoretical Grade Elevations Adjusted For Dead Load Deflection
Bk. W. Abut.	99+03.75	-40.33	21.34	21.34
℄ Brg. W. Abut.	99+07.00	-40.33	21.44	21.44
A	99+17.00	-40.33	21.73	21.73
B	99+27.00	-40.33	21.99	21.99
C	99+37.00	-40.33	22.21	22.21
D	99+47.00	-40.33	22.40	22.39
℄ Pier 1	99+57.00	-40.33	22.55	22.55
E	99+67.00	-40.33	22.67	22.69
F	99+77.00	-40.33	22.76	22.81
G	99+87.00	-40.33	22.81	22.89
H	99+97.00	-40.33	22.82	22.92
I	100+07.00	-40.33	22.81	22.90
J	100+17.00	-40.33	22.76	22.83
K	100+27.00	-40.33	22.67	22.71
L	100+37.00	-40.33	22.55	22.56
℄ Pier 2	100+43.00	-40.33	22.46	22.46
M	100+53.00	-40.33	22.29	22.28
N	100+63.00	-40.33	22.08	22.08
O	100+73.00	-40.33	21.84	21.84
P	100+83.00	-40.33	21.56	21.56
℄ Brg. E. Abut.	100+93.00	-40.33	21.25	21.25
Bk. E. Abut.	100+96.25	-40.33	21.14	21.14

BEAM 3

Location	Station	*Offset	Theoretical Grade Elevations	Theoretical Grade Elevations Adjusted For Dead Load Deflection
Bk. W. Abut.	99+03.75	-33.00	21.40	21.40
℄ Brg. W. Abut.	99+07.00	-33.00	21.50	21.50
A	99+17.00	-33.00	21.79	21.80
B	99+27.00	-33.00	22.05	22.05
C	99+37.00	-33.00	22.27	22.27
D	99+47.00	-33.00	22.46	22.45
℄ Pier 1	99+57.00	-33.00	22.61	22.61
E	99+67.00	-33.00	22.73	22.76
F	99+77.00	-33.00	22.82	22.87
G	99+87.00	-33.00	22.87	22.95
H	99+97.00	-33.00	22.89	22.98
I	100+07.00	-33.00	22.87	22.96
J	100+17.00	-33.00	22.82	22.89
K	100+27.00	-33.00	22.73	22.78
L	100+37.00	-33.00	22.61	22.63
℄ Pier 2	100+43.00	-33.00	22.53	22.53
M	100+53.00	-33.00	22.35	22.34
N	100+63.00	-33.00	22.14	22.14
O	100+73.00	-33.00	21.90	21.90
P	100+83.00	-33.00	21.62	21.63
℄ Brg. E. Abut.	100+93.00	-33.00	21.31	21.31
Bk. E. Abut.	100+96.25	-33.00	21.20	21.20

BEAM 4

Location	Station	*Offset	Theoretical Grade Elevations	Theoretical Grade Elevations Adjusted For Dead Load Deflection
Bk. W. Abut.	99+03.75	-25.67	21.51	21.51
℄ Brg. W. Abut.	99+07.00	-25.67	21.61	21.61
A	99+17.00	-25.67	21.90	21.91
B	99+27.00	-25.67	22.16	22.16
C	99+37.00	-25.67	22.38	22.38
D	99+47.00	-25.67	22.57	22.56
℄ Pier 1	99+57.00	-25.67	22.72	22.72
E	99+67.00	-25.67	22.84	22.87
F	99+77.00	-25.67	22.93	22.98
G	99+87.00	-25.67	22.98	23.06
H	99+97.00	-25.67	23.00	23.09
I	100+07.00	-25.67	22.98	23.07
J	100+17.00	-25.67	22.93	23.00
K	100+27.00	-25.67	22.84	22.89
L	100+37.00	-25.67	22.72	22.74
℄ Pier 2	100+43.00	-25.67	22.64	22.64
M	100+53.00	-25.67	22.46	22.45
N	100+63.00	-25.67	22.25	22.25
O	100+73.00	-25.67	22.01	22.01
P	100+83.00	-25.67	21.73	21.74
℄ Brg. E. Abut.	100+93.00	-25.67	21.42	21.42
Bk. E. Abut.	100+96.25	-25.67	21.31	21.31

BONDED STAGE CONST. JT.

Location	Station	*Offset	Theoretical Grade Elevations	Theoretical Grade Elevations Adjusted For Dead Load Deflection
Bk. W. Abut.	99+03.75	-23.00	21.55	21.55
℄ Brg. W. Abut.	99+07.00	-23.00	21.65	21.65
A	99+17.00	-23.00	21.94	21.95
B	99+27.00	-23.00	22.20	22.20
C	99+37.00	-23.00	22.42	22.42
D	99+47.00	-23.00	22.61	22.60
℄ Pier 1	99+57.00	-23.00	22.76	22.76
E	99+67.00	-23.00	22.88	22.91
F	99+77.00	-23.00	22.97	23.02
G	99+87.00	-23.00	23.02	23.10
H	99+97.00	-23.00	23.04	23.13
I	100+07.00	-23.00	23.02	23.11
J	100+17.00	-23.00	22.97	23.04
K	100+27.00	-23.00	22.88	22.93
L	100+37.00	-23.00	22.76	22.78
℄ Pier 2	100+43.00	-23.00	22.68	22.68
M	100+53.00	-23.00	22.50	22.49
N	100+63.00	-23.00	22.29	22.29
O	100+73.00	-23.00	22.05	22.05
P	100+83.00	-23.00	21.77	21.78
℄ Brg. E. Abut.	100+93.00	-23.00	21.46	21.46
Bk. E. Abut.	100+96.25	-23.00	21.35	21.35

BEAM 5

Location	Station	*Offset	Theoretical Grade Elevations	Theoretical Grade Elevations Adjusted For Dead Load Deflection
Bk. W. Abut.	99+03.75	-18.33	21.62	21.62
℄ Brg. W. Abut.	99+07.00	-18.33	21.72	21.72
A	99+17.00	-18.33	22.01	22.02
B	99+27.00	-18.33	22.27	22.27
C	99+37.00	-18.33	22.49	22.49
D	99+47.00	-18.33	22.68	22.67
℄ Pier 1	99+57.00	-18.33	22.83	22.83
E	99+67.00	-18.33	22.95	22.98
F	99+77.00	-18.33	23.04	23.09
G	99+87.00	-18.33	23.09	23.17
H	99+97.00	-18.33	23.11	23.20
I	100+07.00	-18.33	23.09	23.18
J	100+17.00	-18.33	23.04	23.11
K	100+27.00	-18.33	22.95	23.00
L	100+37.00	-18.33	22.83	22.85
℄ Pier 2	100+43.00	-18.33	22.75	22.75
M	100+53.00	-18.33	22.57	22.56
N	100+63.00	-18.33	22.36	22.36
O	100+73.00	-18.33	22.12	22.12
P	100+83.00	-18.33	21.84	21.85
℄ Brg. E. Abut.	100+93.00	-18.33	21.53	21.53
Bk. E. Abut.	100+96.25	-18.33	21.42	21.42

*Offset measured from ℄ of roadway

...\0166090-E5038-007-SE02.dgn

11/29/2017 1:46:19 PM

DESIGN: CA				
DRAWN: LAM				
CHECKED: DF				
APPROVED: DF				
DATE: 11/29/2017				
SCALE:				
FILE:	NO.	BY	DATE	DESCRIPTION
	REVISIONS			

KEY PLAN:

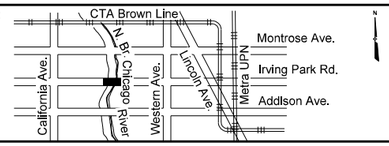

CDOT
CHICAGO DEPARTMENT OF TRANSPORTATION

BOWMAN, BARRETT & ASSOCIATES INC.
CONSULTING ENGINEERS
Chicago, Illinois
312.228.0100
www.bbandainc.com

W. IRVING PARK ROAD AT NORTH BRANCH CHICAGO RIVER

TOP OF SLAB ELEVATIONS II
STRUCTURE NO. 016-6090

PROJECT NO.	E-5-038
DRAWING NO.	S-7
CONTRACT NO.	XXXXX

TOTAL SHEETS	SHEET NO.
184	108

BEAM 6

Location	Station	*Offset	Theoretical Grade Elevations	Theoretical Grade Elevations Adjusted For Dead Load Deflection
Bk. W. Abut.	99+03.75	-11.00	21.73	21.73
℄ Brg. W. Abut.	99+07.00	-11.00	21.83	21.83
A	99+17.00	-11.00	22.12	22.13
B	99+27.00	-11.00	22.38	22.38
C	99+37.00	-11.00	22.60	22.60
D	99+47.00	-11.00	22.79	22.78
℄ Pier 1	99+57.00	-11.00	22.94	22.94
E	99+67.00	-11.00	23.06	23.09
F	99+77.00	-11.00	23.15	23.20
G	99+87.00	-11.00	23.20	23.28
H	99+97.00	-11.00	23.22	23.31
I	100+07.00	-11.00	23.20	23.29
J	100+17.00	-11.00	23.15	23.22
K	100+27.00	-11.00	23.06	23.11
L	100+37.00	-11.00	22.94	22.96
℄ Pier 2	100+43.00	-11.00	22.86	22.86
M	100+53.00	-11.00	22.68	22.67
N	100+63.00	-11.00	22.47	22.47
O	100+73.00	-11.00	22.23	22.23
P	100+83.00	-11.00	21.95	21.96
℄ Brg. E. Abut.	100+93.00	-11.00	21.64	21.64
Bk. E. Abut.	100+96.25	-11.00	21.53	21.53

W.B. PROFILE GRADE LINE

Location	Station	*Offset	Theoretical Grade Elevations	Theoretical Grade Elevations Adjusted For Dead Load Deflection
Bk. W. Abut.	99+03.75	-6.00	21.81	21.81
℄ Brg. W. Abut.	99+07.00	-6.00	21.91	21.91
A	99+17.00	-6.00	22.20	22.20
B	99+27.00	-6.00	22.46	22.46
C	99+37.00	-6.00	22.68	22.67
D	99+47.00	-6.00	22.87	22.86
℄ Pier 1	99+57.00	-6.00	23.02	23.02
E	99+67.00	-6.00	23.14	23.16
F	99+77.00	-6.00	23.22	23.28
G	99+87.00	-6.00	23.28	23.36
H	99+97.00	-6.00	23.29	23.38
I	100+07.00	-6.00	23.27	23.36
J	100+17.00	-6.00	23.22	23.29
K	100+27.00	-6.00	23.14	23.18
L	100+37.00	-6.00	23.02	23.03
℄ Pier 2	100+43.00	-6.00	22.93	22.93
M	100+53.00	-6.00	22.76	22.75
N	100+63.00	-6.00	22.55	22.54
O	100+73.00	-6.00	22.30	22.31
P	100+83.00	-6.00	22.03	22.03
℄ Brg. E. Abut.	100+93.00	-6.00	21.72	21.72
Bk. E. Abut.	100+96.25	-6.00	21.61	21.61

BEAM 7

Location	Station	*Offset	Theoretical Grade Elevations	Theoretical Grade Elevations Adjusted For Dead Load Deflection
Bk. W. Abut.	99+03.75	-3.67	21.84	21.84
℄ Brg. W. Abut.	99+07.00	-3.67	21.94	21.94
A	99+17.00	-3.67	22.23	22.24
B	99+27.00	-3.67	22.49	22.49
C	99+37.00	-3.67	22.71	22.71
D	99+47.00	-3.67	22.90	22.89
℄ Pier 1	99+57.00	-3.67	23.05	23.05
E	99+67.00	-3.67	23.17	23.20
F	99+77.00	-3.67	23.26	23.31
G	99+87.00	-3.67	23.31	23.39
H	99+97.00	-3.67	23.33	23.42
I	100+07.00	-3.67	23.31	23.40
J	100+17.00	-3.67	23.26	23.33
K	100+27.00	-3.67	23.17	23.22
L	100+37.00	-3.67	23.05	23.07
℄ Pier 2	100+43.00	-3.67	22.97	22.97
M	100+53.00	-3.67	22.79	22.78
N	100+63.00	-3.67	22.58	22.58
O	100+73.00	-3.67	22.34	22.34
P	100+83.00	-3.67	22.06	22.07
℄ Brg. E. Abut.	100+93.00	-3.67	21.75	21.75
Bk. E. Abut.	100+96.25	-3.67	21.64	21.64

℄ IL RTE. 19 (IRVING PARK RD.)

Location	Station	*Offset	Theoretical Grade Elevations	Theoretical Grade Elevations Adjusted For Dead Load Deflection
Bk. W. Abut.	99+03.75	0.00	21.90	21.90
℄ Brg. W. Abut.	99+07.00	0.00	22.00	22.00
A	99+17.00	0.00	22.29	22.29
B	99+27.00	0.00	22.55	22.55
C	99+37.00	0.00	22.77	22.76
D	99+47.00	0.00	22.96	22.95
℄ Pier 1	99+57.00	0.00	23.11	23.11
E	99+67.00	0.00	23.23	23.25
F	99+77.00		23.31	23.37
G	99+87.00	0.00	23.37	23.45
H	99+97.00	0.00	23.38	23.47
I	100+07.00	0.00	23.36	23.45
J	100+17.00	0.00	23.31	23.38
K	100+27.00	0.00	23.23	23.27
L	100+37.00	0.00	23.11	23.12
℄ Pier 2	100+43.00	0.00	23.02	23.02
M	100+53.00	0.00	22.85	22.84
N	100+63.00	0.00	22.64	22.63
O	100+73.00	0.00	22.39	22.40
P	100+83.00	0.00	22.12	22.12
℄ Brg. E. Abut.	100+93.00	0.00	21.81	21.81
Bk. E. Abut.	100+96.25	0.00	21.70	21.70

BEAM 8

Location	Station	*Offset	Theoretical Grade Elevations	Theoretical Grade Elevations Adjusted For Dead Load Deflection
Bk. W. Abut.	99+03.75	3.67	21.84	21.84
℄ Brg. W. Abut.	99+07.00	3.67	21.94	21.94
A	99+17.00	3.67	22.23	22.24
B	99+27.00	3.67	22.49	22.49
C	99+37.00	3.67	22.71	22.71
D	99+47.00	3.67	22.90	22.89
℄ Pier 1	99+57.00	3.67	23.05	23.05
E	99+67.00	3.67	23.17	23.20
F	99+77.00	3.67	23.26	23.31
G	99+87.00	3.67	23.31	23.39
H	99+97.00	3.67	23.33	23.42
I	100+07.00	3.67	23.31	23.40
J	100+17.00	3.67	23.26	23.33
K	100+27.00	3.67	23.17	23.22
L	100+37.00	3.67	23.05	23.07
℄ Pier 2	100+43.00	3.67	22.97	22.97
M	100+53.00	3.67	22.79	22.78
N	100+63.00	3.67	22.58	22.58
O	100+73.00	3.67	22.34	22.34
P	100+83.00	3.67	22.06	22.07
℄ Brg. E. Abut.	100+93.00	3.67	21.75	21.75
Bk. E. Abut.	100+96.25	3.67	21.64	21.64

E.B. PROFILE GRADE LINE

Location	Station	*Offset	Theoretical Grade Elevations	Theoretical Grade Elevations Adjusted For Dead Load Deflection
Bk. W. Abut.	99+03.75	6.00	21.81	21.81
℄ Brg. W. Abut.	99+07.00	6.00	21.91	21.91
A	99+17.00	6.00	22.20	22.20
B	99+27.00	6.00	22.46	22.46
C	99+37.00	6.00	22.68	22.67
D	99+47.00	6.00	22.87	22.86
℄ Pier 1	99+57.00	6.00	23.02	23.02
E	99+67.00	6.00	23.14	23.16
F	99+77.00	6.00	23.22	23.28
G	99+87.00	6.00	23.28	23.36
H	99+97.00	6.00	23.29	23.38
I	100+07.00	6.00	23.27	23.36
J	100+17.00	6.00	23.22	23.29
K	100+27.00	6.00	23.14	23.18
L	100+37.00	6.00	23.02	23.03
℄ Pier 2	100+43.00	6.00	22.93	22.93
M	100+53.00	6.00	22.76	22.75
N	100+63.00	6.00	22.55	22.54
O	100+73.00	6.00	22.30	22.31
P	100+83.00	6.00	22.03	22.03
℄ Brg. E. Abut.	100+93.00	6.00	21.72	21.72
Bk. E. Abut.	100+96.25	6.00	21.61	21.61

*Offset measured from ℄ of roadway

...\0166090-E5038-008-SE03.dgn

11/29/2017 1:46:21 PM

DESIGN:	CA			
DRAWN:	LAM			
CHECKED:	DF			
APPROVED:	DF			
DATE:	11/29/2017			
SCALE:				
FILE:	NO.	BY	DATE	DESCRIPTION
	REVISIONS			

KEY PLAN:

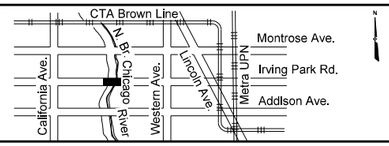

CDOT
CHICAGO DEPARTMENT OF TRANSPORTATION

BOWMAN, BARRETT & ASSOCIATES INC.
CONSULTING ENGINEERS
Chicago, Illinois
312.228.0100
www.bbandainc.com

W. IRVING PARK ROAD AT NORTH BRANCH CHICAGO RIVER

TOP OF SLAB ELEVATIONS III
STRUCTURE NO. 016-6090

PROJECT NO. E-5-038

DRAWING NO. S-8

CONTRACT NO. XXXXX

TOTAL SHEETS	SHEET NO.
184	109

BEAM 9

Location	Station	*Offset	Theoretical Grade Elevations	Theoretical Grade Elevations Adjusted For Dead Load Deflection
Bk. W. Abut.	99+03.75	11.00	21.73	21.73
℄ Brg. W. Abut.	99+07.00	11.00	21.83	21.83
A	99+17.00	11.00	22.12	22.13
B	99+27.00	11.00	22.38	22.38
C	99+37.00	11.00	22.60	22.60
D	99+47.00	11.00	22.79	22.78
℄ Pier 1	99+57.00	11.00	22.94	22.94
E	99+67.00	11.00	23.06	23.09
F	99+77.00	11.00	23.15	23.20
G	99+87.00	11.00	23.20	23.28
H	99+97.00	11.00	23.22	23.31
I	100+07.00	11.00	23.20	23.29
J	100+17.00	11.00	23.15	23.22
K	100+27.00	11.00	23.06	23.11
L	100+37.00	11.00	22.94	22.96
℄ Pier 2	100+43.00	11.00	22.86	22.86
M	100+53.00	11.00	22.68	22.67
N	100+63.00	11.00	22.47	22.47
O	100+73.00	11.00	22.23	22.23
P	100+83.00	11.00	21.95	21.96
℄ Brg. E. Abut.	100+93.00	11.00	21.64	21.64
Bk. E. Abut.	100+96.25	11.00	21.53	21.53

BEAM 10

Location	Station	*Offset	Theoretical Grade Elevations	Theoretical Grade Elevations Adjusted For Dead Load Deflection
Bk. W. Abut.	99+03.75	18.33	21.62	21.62
℄ Brg. W. Abut.	99+07.00	18.33	21.72	21.72
A	99+17.00	18.33	22.01	22.02
B	99+27.00	18.33	22.27	22.27
C	99+37.00	18.33	22.49	22.49
D	99+47.00	18.33	22.68	22.67
℄ Pier 1	99+57.00	18.33	22.83	22.83
E	99+67.00	18.33	22.95	22.98
F	99+77.00	18.33	23.04	23.09
G	99+87.00	18.33	23.09	23.17
H	99+97.00	18.33	23.11	23.20
I	100+07.00	18.33	23.09	23.18
J	100+17.00	18.33	23.04	23.11
K	100+27.00	18.33	22.95	23.00
L	100+37.00	18.33	22.83	22.85
℄ Pier 2	100+43.00	18.33	22.75	22.75
M	100+53.00	18.33	22.57	22.56
N	100+63.00	18.33	22.36	22.36
O	100+73.00	18.33	22.12	22.12
P	100+83.00	18.33	21.84	21.85
℄ Brg. E. Abut.	100+93.00	18.33	21.53	21.53
Bk. E. Abut.	100+96.25	18.33	21.42	21.42

BONDED STAGE CONSTRUCTION JT.

Location	Station	*Offset	Theoretical Grade Elevations	Theoretical Grade Elevations Adjusted For Dead Load Deflection
Bk. W. Abut.	99+03.75	23.00	21.55	21.55
℄ Brg. W. Abut.	99+07.00	23.00	21.65	21.65
A	99+17.00	23.00	21.94	21.95
B	99+27.00	23.00	22.20	22.20
C	99+37.00	23.00	22.42	22.42
D	99+47.00	23.00	22.61	22.60
℄ Pier 1	99+57.00	23.00	22.76	22.76
E	99+67.00	23.00	22.88	22.91
F	99+77.00	23.00	22.97	23.02
G	99+87.00	23.00	23.02	23.10
H	99+97.00	23.00	23.04	23.13
I	100+07.00	23.00	23.02	23.11
J	100+17.00	23.00	22.97	23.04
K	100+27.00	23.00	22.88	22.93
L	100+37.00	23.00	22.76	22.78
℄ Pier 2	100+43.00	23.00	22.68	22.68
M	100+53.00	23.00	22.50	22.49
N	100+63.00	23.00	22.29	22.29
O	100+73.00	23.00	22.05	22.05
P	100+83.00	23.00	21.77	21.78
℄ Brg. E. Abut.	100+93.00	23.00	21.46	21.46
Bk. E. Abut.	100+96.25	23.00	21.35	21.35

BEAM 11

Location	Station	*Offset	Theoretical Grade Elevations	Theoretical Grade Elevations Adjusted For Dead Load Deflection
Bk. W. Abut.	99+03.75	25.67	21.51	21.51
℄ Brg. W. Abut.	99+07.00	25.67	21.61	21.61
A	99+17.00	25.67	21.90	21.91
B	99+27.00	25.67	22.16	22.16
C	99+37.00	25.67	22.38	22.38
D	99+47.00	25.67	22.57	22.56
℄ Pier 1	99+57.00	25.67	22.72	22.72
E	99+67.00	25.67	22.84	22.87
F	99+77.00	25.67	22.93	22.98
G	99+87.00	25.67	22.98	23.06
H	99+97.00	25.67	23.00	23.09
I	100+07.00	25.67	22.98	23.07
J	100+17.00	25.67	22.93	23.00
K	100+27.00	25.67	22.84	22.89
L	100+37.00	25.67	22.72	22.74
℄ Pier 2	100+43.00	25.67	22.64	22.64
M	100+53.00	25.67	22.46	22.45
N	100+63.00	25.67	22.25	22.25
O	100+73.00	25.67	22.01	22.01
P	100+83.00	25.67	21.73	21.74
℄ Brg. E. Abut.	100+93.00	25.67	21.42	21.42
Bk. E. Abut.	100+96.25	25.67	21.31	21.31

BEAM 12

Location	Station	*Offset	Theoretical Grade Elevations	Theoretical Grade Elevations Adjusted For Dead Load Deflection
Bk. W. Abut.	99+03.75	33.00	21.40	21.40
℄ Brg. W. Abut.	99+07.00	33.00	21.50	21.50
A	99+17.00	33.00	21.79	21.80
B	99+27.00	33.00	22.05	22.05
C	99+37.00	33.00	22.27	22.27
D	99+47.00	33.00	22.46	22.45
℄ Pier 1	99+57.00	33.00	22.61	22.61
E	99+67.00	33.00	22.73	22.76
F	99+77.00	33.00	22.82	22.87
G	99+87.00	33.00	22.87	22.95
H	99+97.00	33.00	22.89	22.98
I	100+07.00	33.00	22.87	22.96
J	100+17.00	33.00	22.82	22.89
K	100+27.00	33.00	22.73	22.78
L	100+37.00	33.00	22.61	22.63
℄ Pier 2	100+43.00	33.00	22.53	22.53
M	100+53.00	33.00	22.35	22.34
N	100+63.00	33.00	22.14	22.14
O	100+73.00	33.00	21.90	21.90
P	100+83.00	33.00	21.62	21.63
℄ Brg. E. Abut.	100+93.00	33.00	21.31	21.31
Bk. E. Abut.	100+96.25	33.00	21.20	21.20

BEAM 13

Location	Station	*Offset	Theoretical Grade Elevations	Theoretical Grade Elevations Adjusted For Dead Load Deflection
Bk. W. Abut.	99+03.75	40.33	21.34	21.34
℄ Brg. W. Abut.	99+07.00	40.33	21.44	21.44
A	99+17.00	40.33	21.73	21.73
B	99+27.00	40.33	21.99	21.99
C	99+37.00	40.33	22.21	22.21
D	99+47.00	40.33	22.40	22.39
℄ Pier 1	99+57.00	40.33	22.55	22.55
E	99+67.00	40.33	22.67	22.69
F	99+77.00	40.33	22.76	22.81
G	99+87.00	40.33	22.81	22.89
H	99+97.00	40.33	22.82	22.92
I	100+07.00	40.33	22.81	22.90
J	100+17.00	40.33	22.76	22.83
K	100+27.00	40.33	22.67	22.71
L	100+37.00	40.33	22.55	22.56
℄ Pier 2	100+43.00	40.33	22.46	22.46
M	100+53.00	40.33	22.29	22.28
N	100+63.00	40.33	22.08	22.08
O	100+73.00	40.33	21.84	21.84
P	100+83.00	40.33	21.56	21.56
℄ Brg. E. Abut.	100+93.00	40.33	21.25	21.25
Bk. E. Abut.	100+96.25	40.33	21.14	21.14

*Offset measured from ℄ of roadway

...\0166090-E5038-009-SE04.dgn

11/29/2017 1:46:24 PM

DESIGN:	CA			
DRAWN:	LAM			
CHECKED:	DF			
APPROVED:	DF			
DATE:	11/29/2017			
SCALE:				
FILE:	NO.	BY	DATE	DESCRIPTION
	REVISIONS			

KEY PLAN:

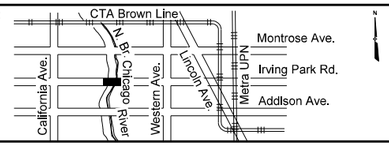

CDOT
CHICAGO DEPARTMENT OF TRANSPORTATION

BOWMAN, BARRETT & ASSOCIATES INC.
CONSULTING ENGINEERS
Chicago, Illinois
312.228.0100
www.bbandainc.com

W. IRVING PARK ROAD AT NORTH BRANCH CHICAGO RIVER

TOP OF SLAB ELEVATIONS IV STRUCTURE NO. 016-6090

PROJECT NO.	E-5-038
DRAWING NO.	S-9
CONTRACT NO.	XXXXX

TOTAL SHEETS	SHEET NO.
184	110

BEAM 14

Location	Station	*Offset	Theoretical Grade Elevations	Theoretical Grade Elevations Adjusted For Dead Load Deflection
Bk. W. Abut.	99+03.75	47.67	21.18	21.18
℄ Brg. W. Abut.	99+07.00	47.67	21.28	21.28
A	99+17.00	47.67	21.57	21.58
B	99+27.00	47.67	21.83	21.83
C	99+37.00	47.67	22.05	22.05
D	99+47.00	47.67	22.24	22.23
℄ Pier 1	99+57.00	47.67	22.39	22.39
E	99+67.00	47.67	22.51	22.54
F	99+77.00	47.67	22.60	22.66
G	99+87.00	47.67	22.65	22.74
H	99+97.00	47.67	22.67	22.77
I	100+07.00	47.67	22.65	22.75
J	100+17.00	47.67	22.60	22.68
K	100+27.00	47.67	22.51	22.56
L	100+37.00	47.67	22.39	22.42
℄ Pier 2	100+43.00	47.67	22.31	22.31
M	100+53.00	47.67	22.13	22.12
N	100+63.00	47.67	21.92	21.92
O	100+73.00	47.67	21.68	21.68
P	100+83.00	47.67	21.40	21.41
℄ Brg. E. Abut.	100+93.00	47.67	21.09	21.09
Bk. E. Abut.	100+96.25	47.67	20.98	20.98

*Offset measured from ℄ of roadway

...\0166090-E5038-010-SE05.dgn
11/29/2017 1:46:26 PM

DESIGN: CA				
DRAWN: LAM				
CHECKED: DF				
APPROVED: DF				
DATE: 11/29/2017				
SCALE:				
FILE:	NO.	BY	DATE	DESCRIPTION
	REVISIONS			

KEY PLAN:

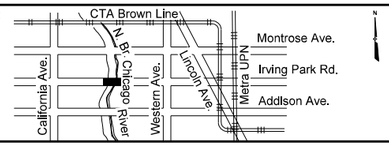

CDOT
CHICAGO DEPARTMENT OF TRANSPORTATION

BOWMAN, BARRETT & ASSOCIATES INC.
CONSULTING ENGINEERS
Chicago, Illinois
312.228.0100
www.bbandainc.com

W. IRVING PARK ROAD AT NORTH BRANCH CHICAGO RIVER

TOP OF SLAB ELEVATIONS V
STRUCTURE NO. 016–6090

PROJECT NO.	E-5-038
DRAWING NO.	S–10
CONTRACT NO.	XXXXX

TOTAL SHEETS	SHEET NO.
184	111

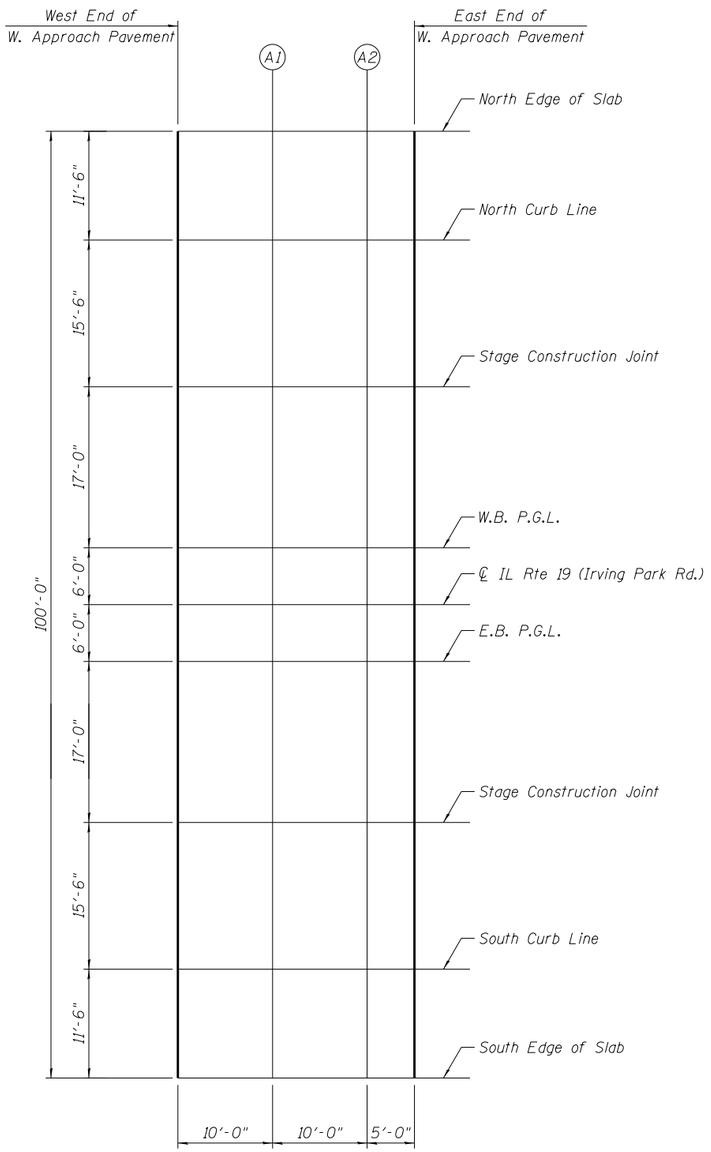

PLAN

N

NORTH EDGE OF SLAB

Location	Station	*Offset	Theoretical Grade Elevations
W. End of W. Appr. Pvmt.	98+79.25	-50.00	20.56
A1	98+89.25	-50.00	20.95
A2	98+99.25	-50.00	21.30
E. End of W. Appr. Pvmt.	99+04.25	-50.00	21.46

NORTH CURB LINE

Location	Station	*Offset	Theoretical Grade Elevations
W. End of W. Appr. Pvmt.	98+79.25	-38.50	20.44
A1	98+89.25	-38.50	20.82
A2	98+99.25	-38.50	21.17
E. End of W. Appr. Pvmt.	99+04.25	-38.50	21.33

STAGE CONSTRUCTION JOINT

Location	Station	*Offset	Theoretical Grade Elevations
W. End of W. Appr. Pvmt.	98+79.25	-23.00	20.67
A1	98+89.25	-23.00	21.05
A2	98+99.25	-23.00	21.40
E. End of W. Appr. Pvmt.	99+04.25	-23.00	21.57

W.B. PROFILE GRADE LINE

Location	Station	*Offset	Theoretical Grade Elevations
W. End of W. Appr. Pvmt.	98+79.25	-6.00	20.92
A1	98+89.25	-6.00	21.31
A2	98+99.25	-6.00	21.66
E. End of W. Appr. Pvmt.	99+04.25	-6.00	21.82

℄ IL RTE 19 (IRVING PARK RD.)

Location	Station	*Offset	Theoretical Grade Elevations
W. End of W. Appr. Pvmt.	98+79.25	0.00	21.01
A1	98+89.25	0.00	21.40
A2	98+99.25	0.00	21.75
E. End of W. Appr. Pvmt.	99+04.25	0.00	21.91

E.B. PROFILE GRADE LINE

Location	Station	*Offset	Theoretical Grade Elevations
W. End of W. Appr. Pvmt.	98+79.25	6.00	20.92
A1	98+89.25	6.00	21.31
A2	98+99.25	6.00	21.66
E. End of W. Appr. Pvmt.	99+04.25	6.00	21.82

STAGE CONSTRUCTION JOINT

Location	Station	*Offset	Theoretical Grade Elevations
W. End of W. Appr. Pvmt.	98+79.25	23.00	20.67
A1	98+89.25	23.00	21.05
A2	98+99.25	23.00	21.40
E. End of W. Appr. Pvmt.	99+04.25	23.00	21.57

SOUTH CURB LINE

Location	Station	*Offset	Theoretical Grade Elevations
W. End of W. Appr. Pvmt.	98+79.25	38.50	20.44
A1	98+89.25	38.50	20.82
A2	98+99.25	38.50	21.17
E. End of W. Appr. Pvmt.	99+04.25	38.50	21.33

*Offset measured from ℄ of roadway.

SOUTH EDGE OF SLAB

Location	Station	*Offset	Theoretical Grade Elevations
W. End of W. Appr. Pvmt.	98+79.25	50.00	20.56
A1	98+89.25	50.00	20.95
A2	98+99.25	50.00	21.30
E. End of W. Appr. Pvmt.	99+04.25	50.00	21.46

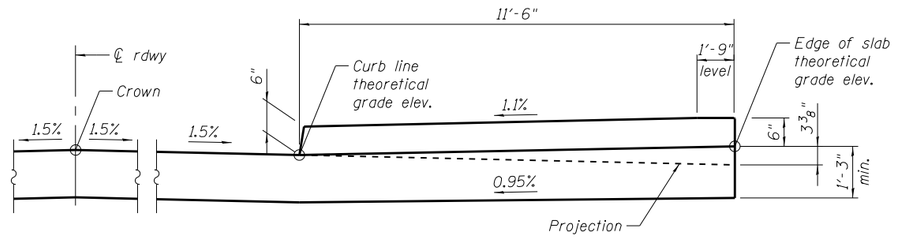

SECTION THRU SOUTH SIDEWALK

(Looking East) (North sidewalk similar)

...\0166090-E5038-011-ASE1.dgn
11/29/2017 1:46:28 PM

DESIGN: CA				
DRAWN: MTR				
CHECKED: DF				
APPROVED: DF				
DATE: 11/29/2017				
SCALE:				
FILE:	NO.	BY	DATE	DESCRIPTION
	REVISIONS			

KEY PLAN:

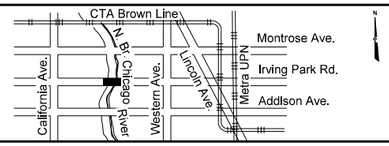

CDOT
CHICAGO DEPARTMENT OF TRANSPORTATION

BOWMAN, BARRETT & ASSOCIATES INC.
CONSULTING ENGINEERS
Chicago, Illinois
312.228.0100
www.bbandainc.com

W. IRVING PARK ROAD AT NORTH BRANCH CHICAGO RIVER

TOP OF WEST APPROACH SLAB ELEVATIONS
STRUCTURE NO. 016–6090

PROJECT NO. E-5-038

DRAWING NO. S–11

CONTRACT NO. XXXXX

TOTAL SHEETS	SHEET NO.
184	112

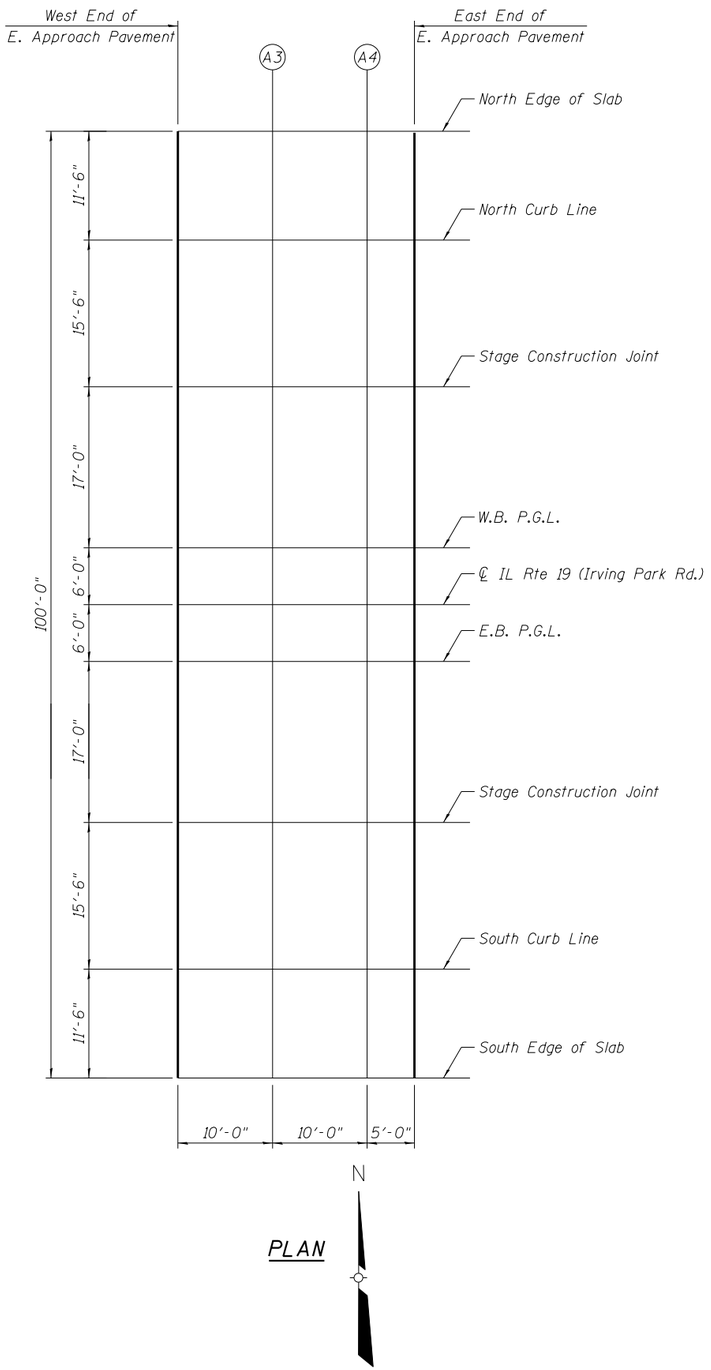

PLAN

NORTH EDGE OF SLAB

Location	Station	*Offset	Theoretical Grade Elevations
W. End of E. Appr. Pvmt.	100+95.75	-50.00	21.26
A3	101+05.75	-50.00	20.91
A4	101+15.75	-50.00	20.52
E. End of E. Appr. Pvmt.	101+20.75	-50.00	20.31

NORTH CURB LINE

Location	Station	*Offset	Theoretical Grade Elevations
W. End of E. Appr. Pvmt.	100+95.75	-38.50	21.14
A3	101+05.75	-38.50	20.78
A4	101+15.75	-38.50	20.39
E. End of E. Appr. Pvmt.	101+20.75	-38.50	20.19

STAGE CONSTRUCTION JOINT

Location	Station	*Offset	Theoretical Grade Elevations
W. End of E. Appr. Pvmt.	100+95.75	-23.00	21.37
A3	101+05.75	-23.00	21.02
A4	101+15.75	-23.00	20.63
E. End of E. Appr. Pvmt.	101+20.75	-23.00	20.42

W.B. PROFILE GRADE LINE

Location	Station	*Offset	Theoretical Grade Elevations
W. End of E. Appr. Pvmt.	100+95.75	-6.00	21.63
A3	101+05.75	-6.00	21.27
A4	101+15.75	-6.00	20.88
E. End of E. Appr. Pvmt.	101+20.75	-6.00	20.67

℄ IL RTE 19 (IRVING PARK RD.)

Location	Station	*Offset	Theoretical Grade Elevations
W. End of E. Appr. Pvmt.	100+95.75	0.00	21.72
A3	101+05.75	0.00	21.36
A4	101+15.75	0.00	20.97
E. End of E. Appr. Pvmt.	101+20.75	0.00	20.76

E.B. PROFILE GRADE LINE

Location	Station	*Offset	Theoretical Grade Elevations
W. End of E. Appr. Pvmt.	100+95.75	6.00	21.63
A3	101+05.75	6.00	21.27
A4	101+15.75	6.00	20.88
E. End of E. Appr. Pvmt.	101+20.75	6.00	20.67

STAGE CONSTRUCTION JOINT

Location	Station	*Offset	Theoretical Grade Elevations
W. End of E. Appr. Pvmt.	100+95.75	23.00	21.37
A3	101+05.75	23.00	21.02
A4	101+15.75	23.00	20.63
E. End of E. Appr. Pvmt.	101+20.75	23.00	20.42

SOUTH CURB LINE

Location	Station	*Offset	Theoretical Grade Elevations
W. End of E. Appr. Pvmt.	100+95.75	38.50	21.14
A3	101+05.75	38.50	20.78
A4	101+15.75	38.50	20.39
E. End of E. Appr. Pvmt.	101+20.75	38.50	20.19

SOUTH EDGE OF SLAB

Location	Station	*Offset	Theoretical Grade Elevations
W. End of E. Appr. Pvmt.	100+95.75	50.00	21.26
A3	101+05.75	50.00	20.91
A4	101+15.75	50.00	20.52
E. End of E. Appr. Pvmt.	101+20.75	50.00	20.31

*Offset measured from ℄ of roadway.

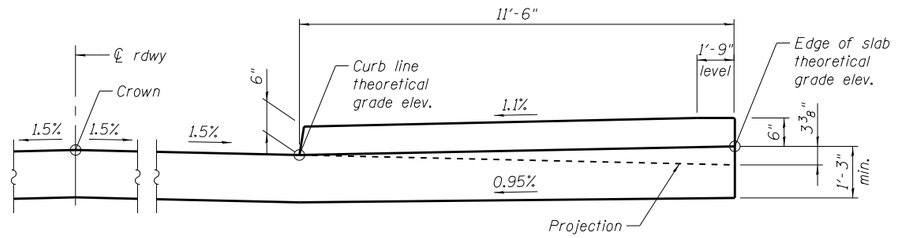

SECTION THRU SOUTH SIDEWALK

(Looking East) (North sidewalk similar)

...\0166090-E5038-012-ASE2.dgn

11/29/2017 1:46:30 PM

DESIGN: CA				
DRAWN: MTR				
CHECKED: DF				
APPROVED: DF				
DATE: 11/29/2017				
SCALE:				
FILE:	NO.	BY	DATE	DESCRIPTION
	REVISIONS			

KEY PLAN:

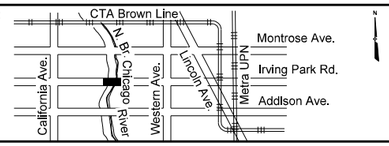

CDOT
CHICAGO DEPARTMENT OF TRANSPORTATION

BOWMAN, BARRETT & ASSOCIATES INC.
CONSULTING ENGINEERS
Chicago, Illinois
312.228.0100
www.bbandainc.com

W. IRVING PARK ROAD AT NORTH BRANCH CHICAGO RIVER

TOP OF EAST APPROACH SLAB ELEVATIONS
STRUCTURE NO. 016–6090

PROJECT NO. E-5-038

DRAWING NO. S–12

CONTRACT NO. XXXXX

TOTAL SHEETS	SHEET NO.
184	113

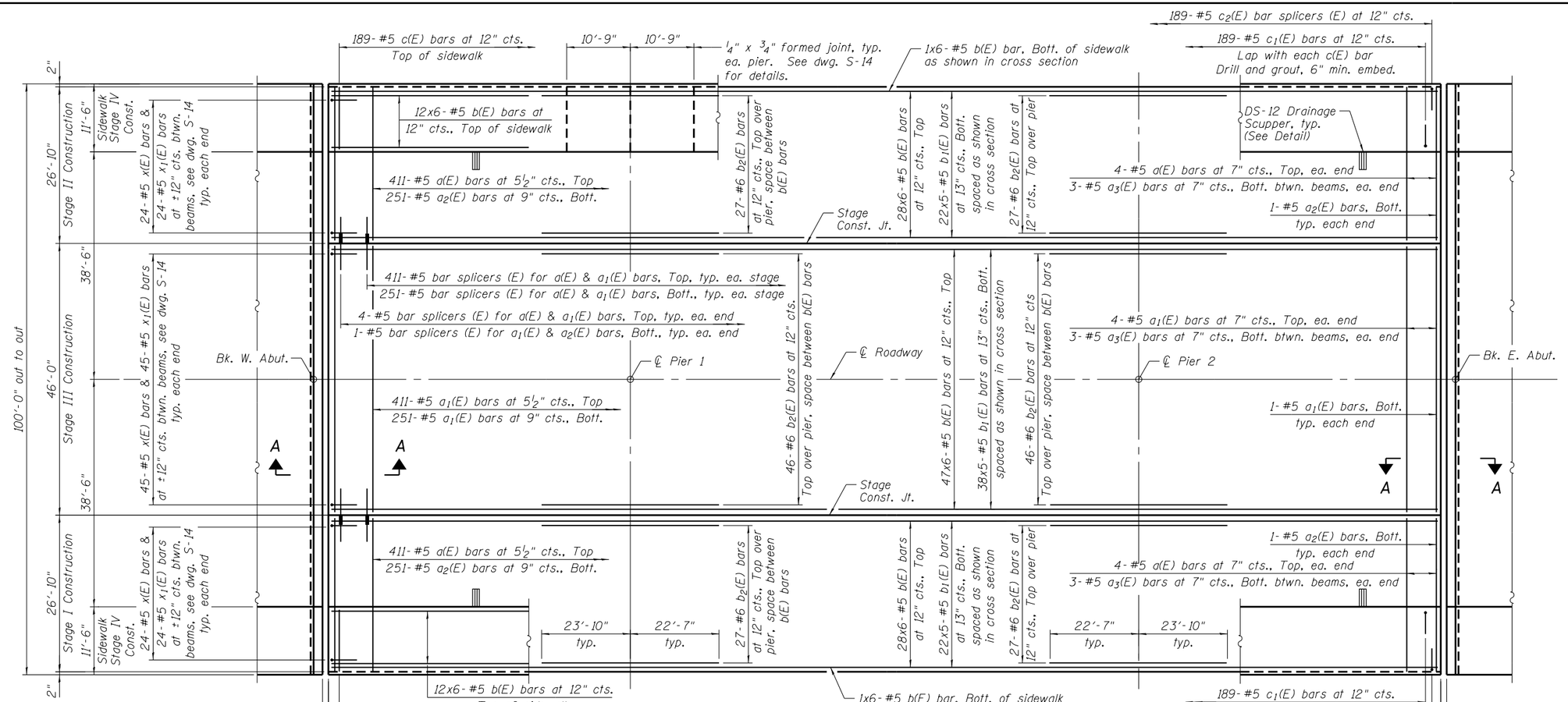

DECK PLAN

MIN. BAR LAP

#5 - 3'-6"

Notes:
See drawing S-14 of S-61 for Section A-A, Scupper Reinf. details, Superstructure details and Bill of Material.

Bars indicated thus 12 x 6- #5 etc. indicates 12 lines of bars with 6 lengths per line.

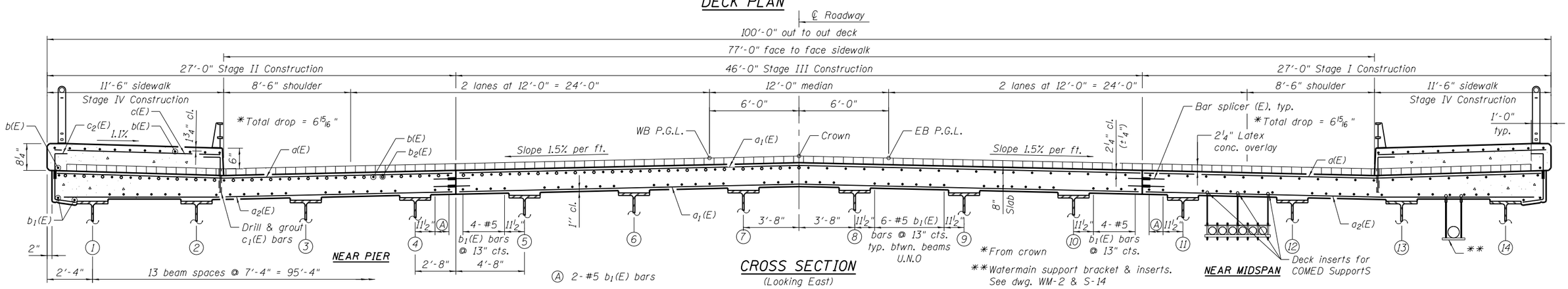

NEAR PIER

NEAR MIDSPAN

Ⓐ 2- #5 b1(E) bars

CROSS SECTION

(Looking East)

DESIGN: CA				
DRAWN: LAM				
CHECKED: DF				
APPROVED: DF				
DATE: 11/29/2017				
SCALE:				
FILE:	NO.	BY	DATE	DESCRIPTION
	REVISIONS			

KEY PLAN:

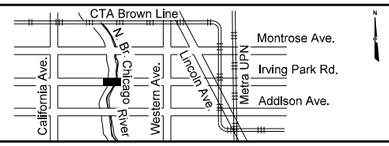

CDOT
CHICAGO DEPARTMENT OF TRANSPORTATION

BOWMAN, BARRETT & ASSOCIATES INC.
CONSULTING ENGINEERS
Chicago, Illinois
312.228.0100
www.bbandainc.com

W. IRVING PARK ROAD AT NORTH BRANCH CHICAGO RIVER

SUPERSTRUCTURE PLAN AND CROSS SECTION
STRUCTURE NO. 016-6090

PROJECT NO.	E-5-038
DRAWING NO.	S-13
CONTRACT NO.	XXXXX

...\0166090-E5038-013-SP.dgn
11/29/2017 1:46:32 PM

TOTAL SHEETS	SHEET NO.
184	114

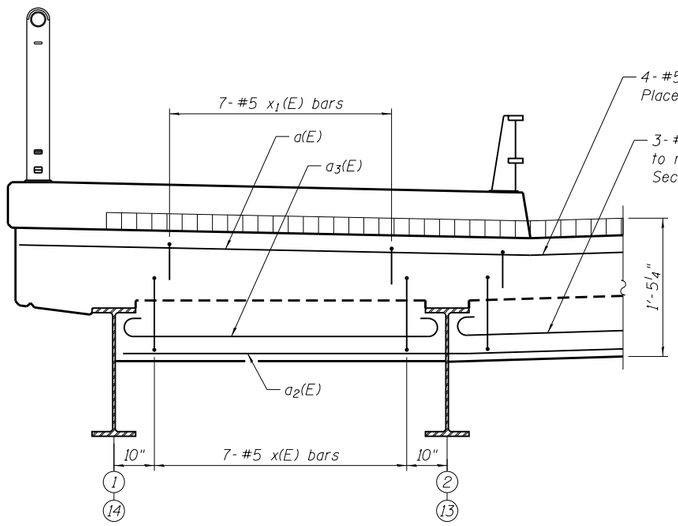

DECK EDGE BEAM ELEVATION

(Typical between beams U.N.O.)

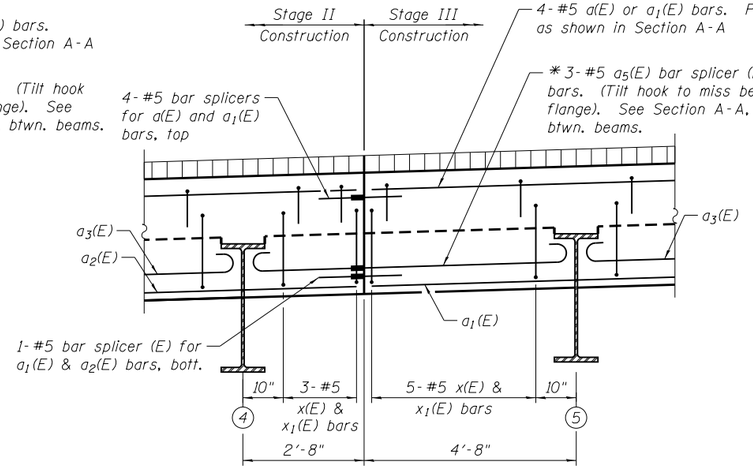

DECK EDGE BEAM ELEVATION AT STAGE CONSTRUCTION

(Stage II/III shown, Stage I/III opp. hand)

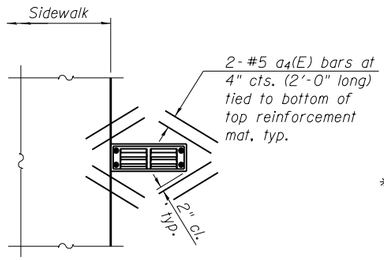

SCUPPER DETAIL

Note:
Cut longitudinal reinforcement to clear drainage scuppers.
See Sheet S-25 of S-61 for DS-12 Drainage Scupper Detail.

SUPERSTRUCTURE BILL OF MATERIAL

	Bar	No.	Size	Length	Shape
	a(E)	838	#5	26'-6"	
	a_1(E)	672	#5	45'-9"	
	a_2(E)	506	#5	26'-3"	
	a_3(E)	66	#5	8'-3"	
	a_4(E)	32	#5	2'-0"	
*	a_5(E)	12	#5	8'-3"	
	b(E)	774	#5	34'-4"	
	b_1(E)	410	#5	40'-5"	
	b_2(E)	200	#6	46'-5"	
	c(E)	378	#5	11'-1"	
**	c_1(E)	378	#5	1'-9½"	
*	c_2(E)	378	#5	3'-5"	
	x(E)	186	#5	6'-5''	
	x_1(E)	186	#5	1'-11"	
	Reinforcement Bars, Epoxy Coated		Pound	136,900	
	High Performance Concrete Superstructures		Cu. Yd.	648.6	
	Bridge Deck Grooving		Sq. Yd.	1,569	
	Protective Concrete Sealer		Sq. Yd.	1,610	

Bars indicated thus 1 x 2-#8 etc. indicates 1 line of bars with 2 lengths per line.

* Bars a_5(E) and c_2(E) shall be furnished by bar splicer supplier and cost included in the contract unit price for Bar Splicers. See dwg. S-57 for bar splicer assembly details.

** Drill and grout bars according to Article 509.06 of the Standard Specifications. Cored holes shall be rough end or scored per manufacturer's recommendations.

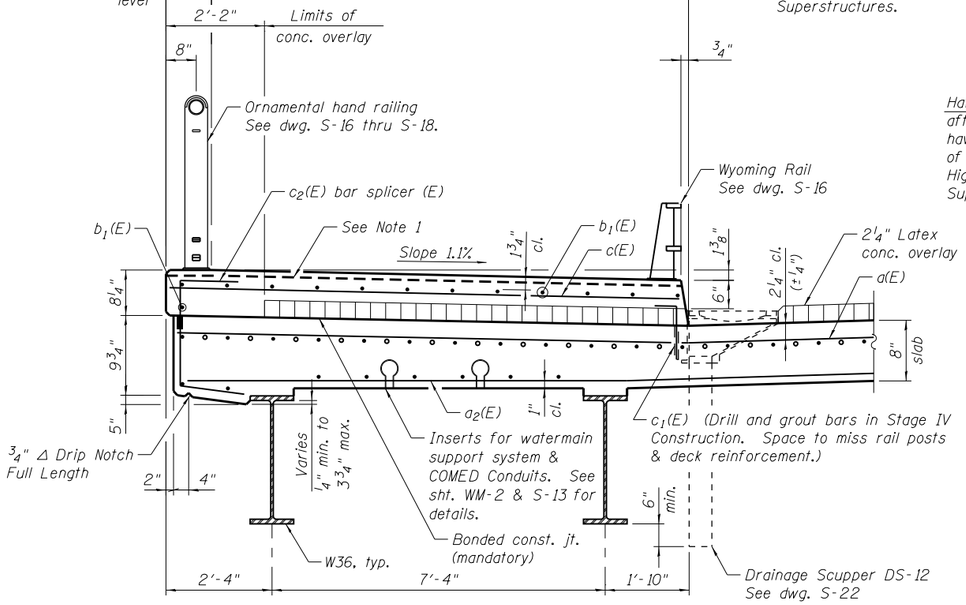

SECTION THRU N. SIDEWALK

(Looking East, S. Sidewalk similar)

Note 1:
¼" x ¾" formed joint in sidewalk with bridge relief joint sealer (full width along joint) at piers and either side as shown on dwg. S-13. Cost included with High Performance Concrete Superstructures.

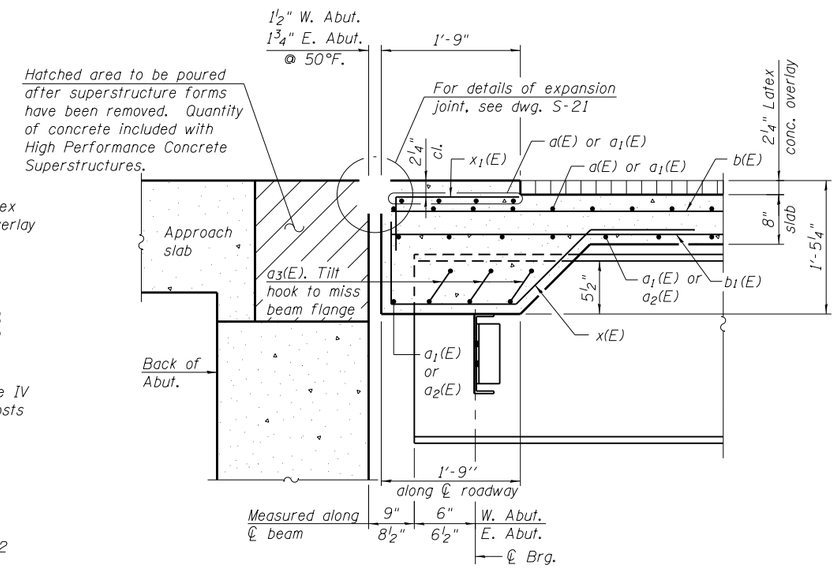

SECTION A-A

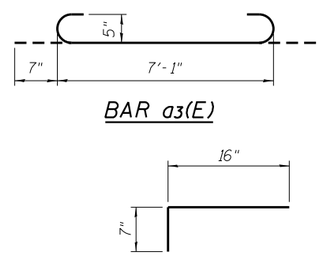

BAR a_3(E)

BAR x_1(E)

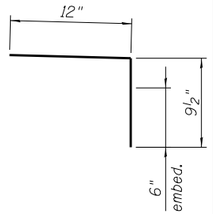

**BAR c_1(E)

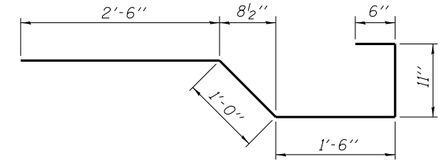

BAR x(E)

DESIGN: CA				
DRAWN: LAM				
CHECKED: DF				
APPROVED: DF				
DATE: 11/29/2017				
SCALE:				
FILE:	NO.	BY	DATE	DESCRIPTION
	REVISIONS			

KEY PLAN:

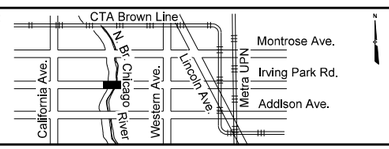

CDOT
CHICAGO DEPARTMENT OF TRANSPORTATION

BOWMAN, BARRETT & ASSOCIATES INC.
CONSULTING ENGINEERS
Chicago, Illinois
312.228.0100
www.bbandainc.com

W. IRVING PARK ROAD AT NORTH BRANCH CHICAGO RIVER

SUPERSTRUCTURE DETAILS I
STRUCTURE NO. 016-6090

PROJECT NO.	E-5-038
DRAWING NO.	S-14
CONTRACT NO.	XXXXX

11/29/2017 1:46:34 PM ...\0166090-E5038-014-SD01.dgn

TOTAL SHEETS	SHEET NO.
184	115

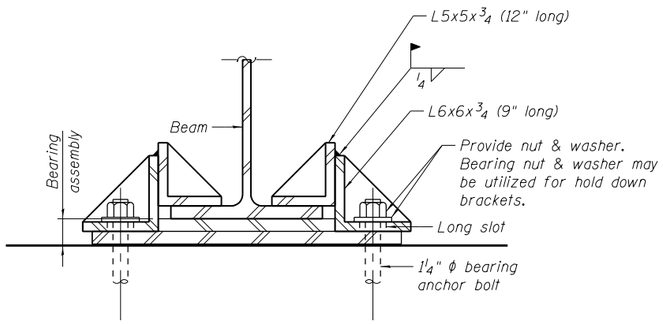

BEAM HOLD DOWN DETAIL AT WEST ABUTMENT

(14 Required)

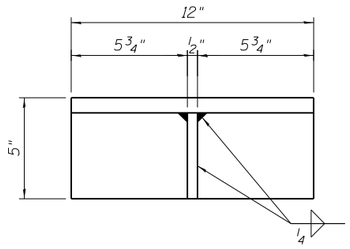

L5x5x3/4" DETAIL

(W. Abut.)

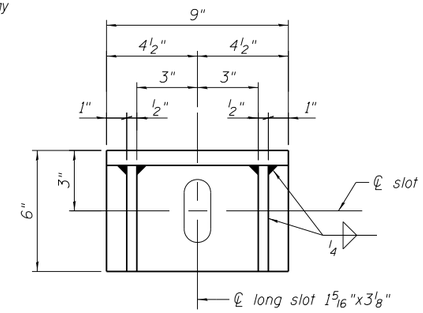

L6x6x3/4" DETAIL

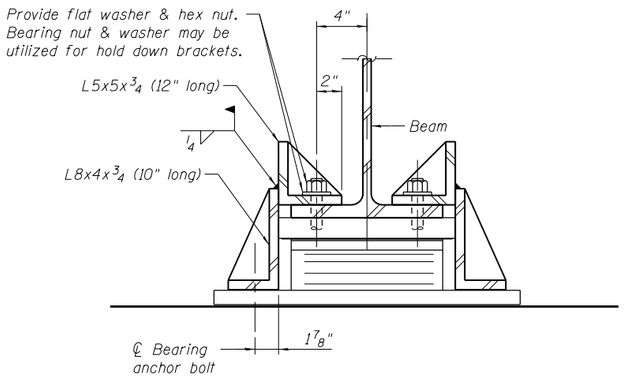

BEAM HOLD DOWN DETAIL AT EAST ABUTMENT

(14 Required)

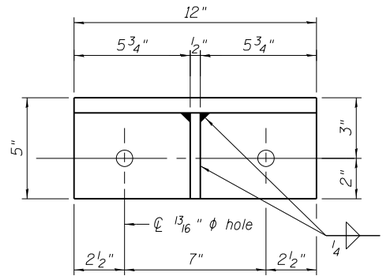

L5x5x3/4" DETAIL

(E. Abut.)

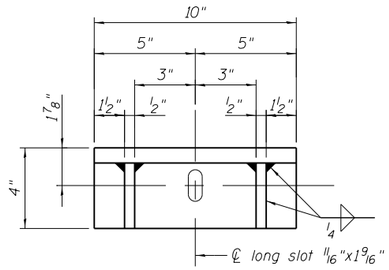

L8x4x3/4" DETAIL

NOTES

1. Contractor may elect to pour the deck starting at one abutment and continuing for the length of the bridge. Hold downs are required to resist uplift forces during the deck pour as well as resting uplift due to live loads during Stage I and II traffic loads. Hold down retainers shall be installed at the time of beam erection and shall remain in place until the Stage IV sidewalks have been installed. The hold downs shall be removed and anchor bolts and side retainers (where required) shall be installed. Hold downs will become property of the Contractor and shall be disposed of properly. This work shall be included in the cost of Furnishing and Erecting Structural Steel. Weight of structural steel included in the total provided on dwg. S-2 .

2. See dwg. S-28 and S-30 for bearing details.

...\0166090-E5038-015-SD02.dgn
11/29/2017 1:46:37 PM

DESIGN: CA				
DRAWN: LAM				
CHECKED: DF				
APPROVED: DF				
DATE: 11/29/2017				
SCALE:				
FILE:	NO.	BY	DATE	DESCRIPTION
	REVISIONS			

KEY PLAN:

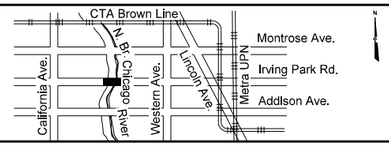

CDOT
CHICAGO DEPARTMENT OF TRANSPORTATION

BOWMAN, BARRETT & ASSOCIATES INC.
CONSULTING ENGINEERS
Chicago, Illinois
312.228.0100
www.bbandainc.com

W. IRVING PARK ROAD AT NORTH BRANCH CHICAGO RIVER

SUPERSTRUCTURE DETAILS II
STRUCTURE NO. 016-6090

PROJECT NO. E-5-038
DRAWING NO. S-15
CONTRACT NO. XXXXX

TOTAL SHEETS	SHEET NO.
184	116

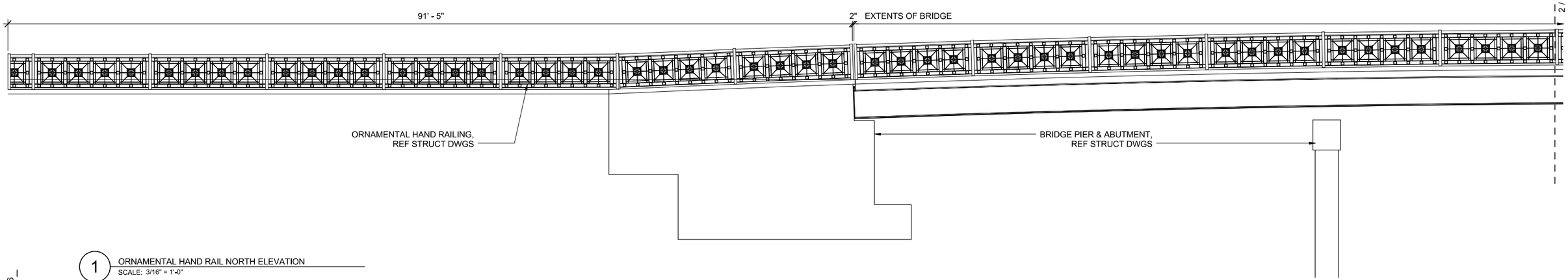

1 ORNAMENTAL HAND RAIL NORTH ELEVATION
SCALE: 3/16" = 1'-0"

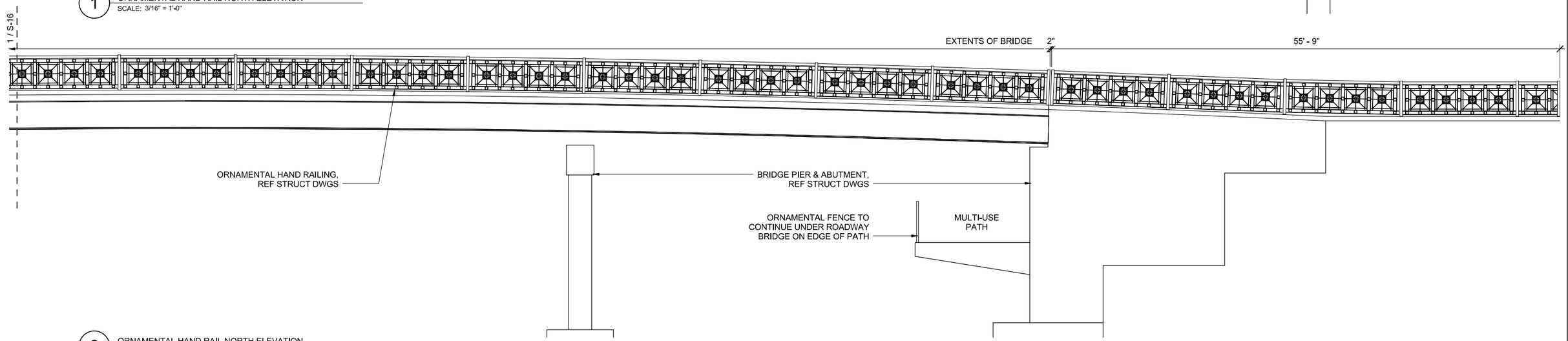

2 ORNAMENTAL HAND RAIL NORTH ELEVATION
SCALE: 3/16" = 1'-0"

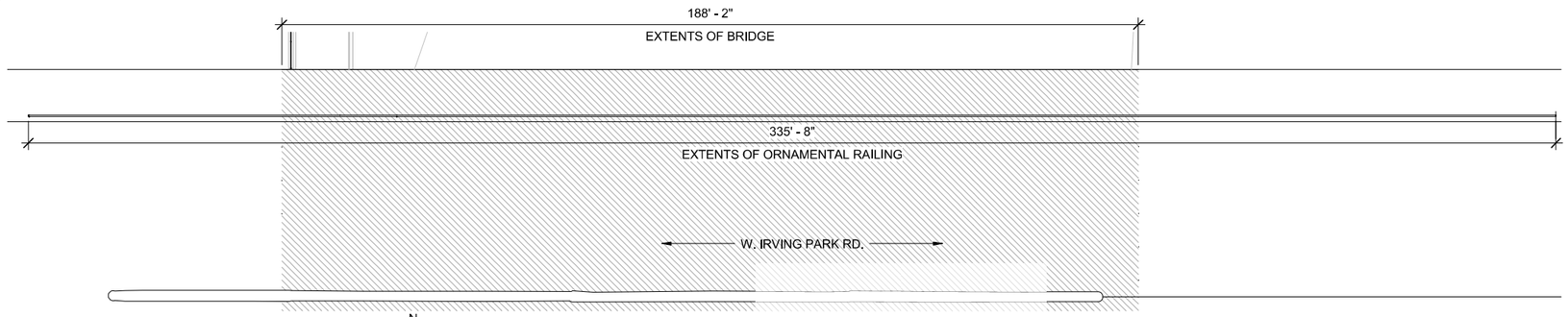

3 IRVING PARK ROAD NORTH ORNAMENTAL RAILING PLAN
SCALE: 1/16" = 1'-0"

SCALE: 3/16"=1'-0"

SCALE: 1/16"=1'-0"

$FILE$

$TIME$

$DATE$

DESIGN: DAS				
DRAWN: AND				
CHECKED: DAS				
APPROVED:				
DATE: 10-9-17				
SCALE:				
FILE:	NO.	BY	DATE	DESCRIPTION
	REVISIONS			

KEY PLAN:

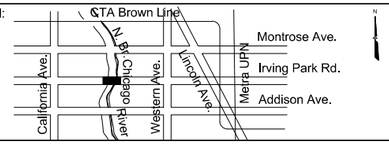

CDOT
CHICAGO DEPARTMENT OF TRANSPORTATION

MULLER+MULLER
ARCHITECTURE · PLANNING · INTERIORS
700 N SANGAMON
CHICAGO, IL 60642
T: 312.432.4180
F: 312.432.4184
© 2013, Muller & Muller, Ltd.

OUC NUMBER 2014-63418

W. IRVING PARK ROAD AT NORTH BRANCH CHICAGO RIVER

ORNAMENTAL HAND RAIL ARCHITECTURAL PLAN AND ELEVATIONS

PROJECT NO. E-5-038

DRAWING NO. S-16

CONTRACT NO. XXXXX

TOTAL SHEETS	SHEET NO.
184	117

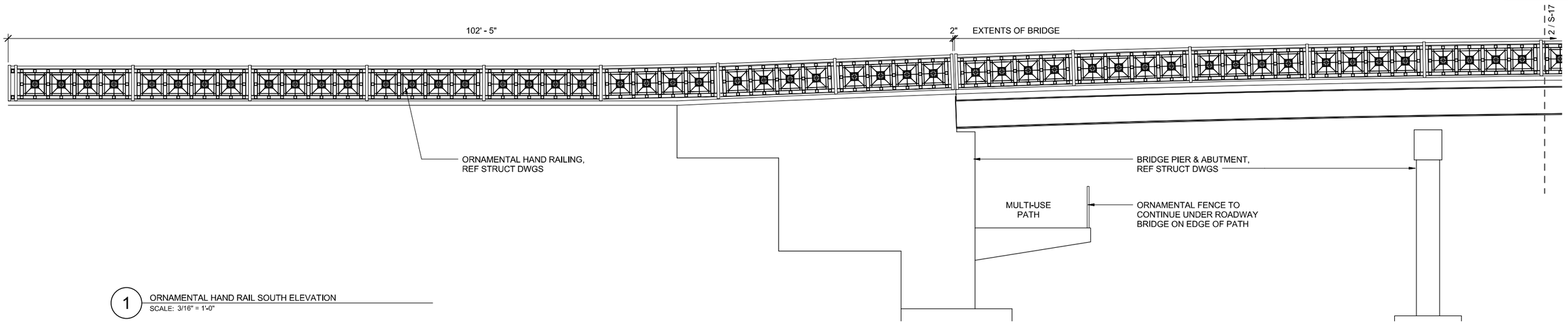

1 ORNAMENTAL HAND RAIL SOUTH ELEVATION
SCALE: 3/16" = 1'-0"

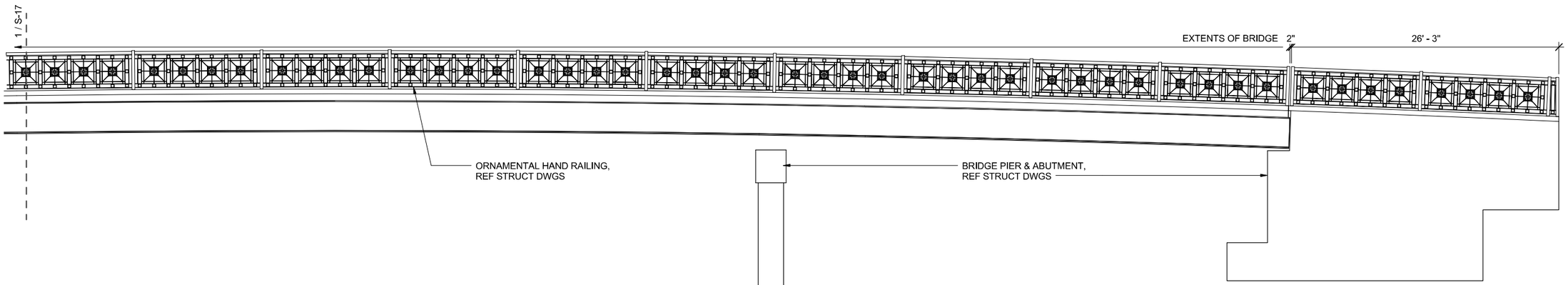

2 ORNAMENTAL HAND RAIL SOUTH ELEVATION
SCALE: 3/16" = 1'-0"

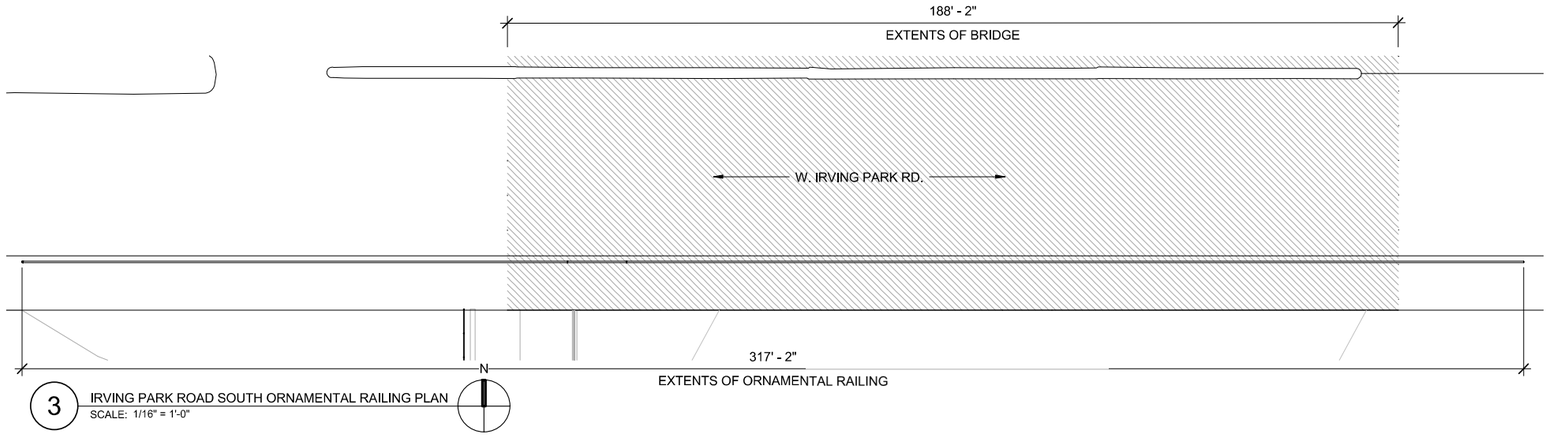

3 IRVING PARK ROAD SOUTH ORNAMENTAL RAILING PLAN
SCALE: 1/16" = 1'-0"

$FILE$

$TIME$

$DATE$

DESIGN: DAS				
DRAWN: AND				
CHECKED: DAS				
APPROVED:				
DATE: 10-9-17				
SCALE:				
FILE:	NO.	BY	DATE	DESCRIPTION
	REVISIONS			

KEY PLAN:

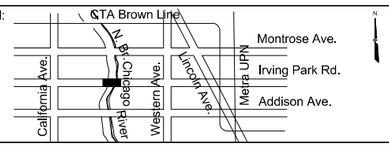

CDOT
CHICAGO DEPARTMENT OF TRANSPORTATION

MULLER+MULLER
ARCHITECTURE · PLANNING · INTERIORS
700 N SANGAMON
CHICAGO, IL 60642
T: 312.432.4180
F: 312.432.4184
© 2013, Muller & Muller, Ltd.

OUC NUMBER 2014-63418

W. IRVING PARK ROAD AT NORTH BRANCH CHICAGO RIVER

ORNAMENTAL HAND RAIL ARCHITECTURAL PLAN AND ELEVATIONS

PROJECT NO.
E-5-038
DRAWING NO.
S-17
CONTRACT NO. XXXXX

TOTAL SHEETS	SHEET NO.
184	118

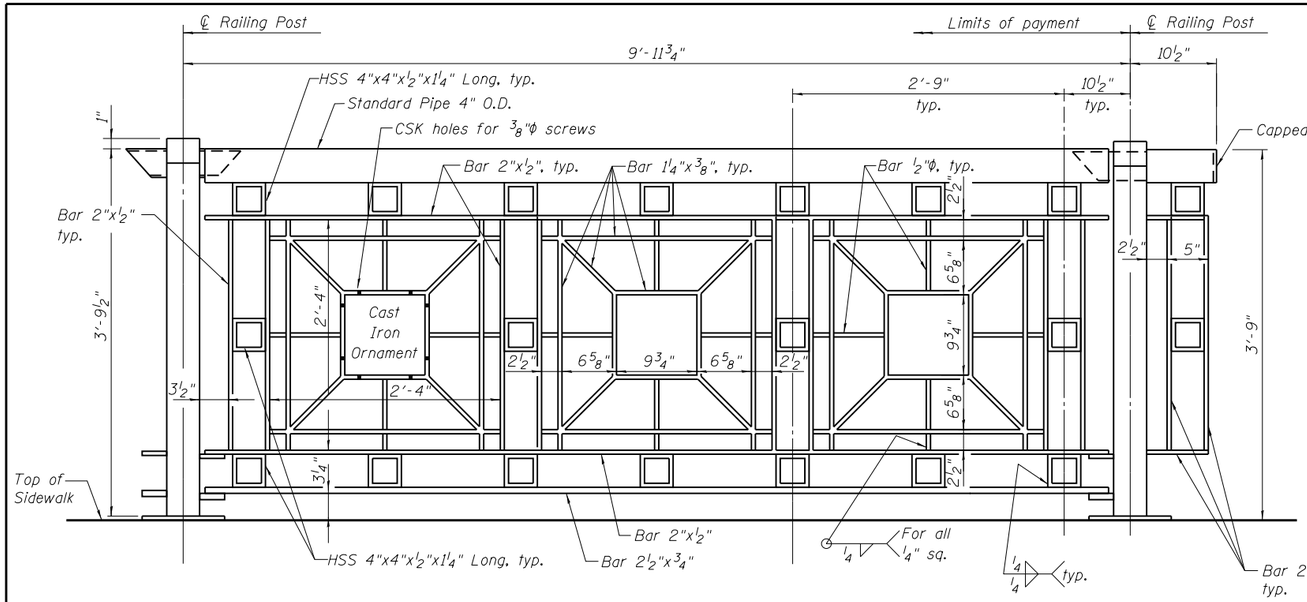

TYPICAL PANEL

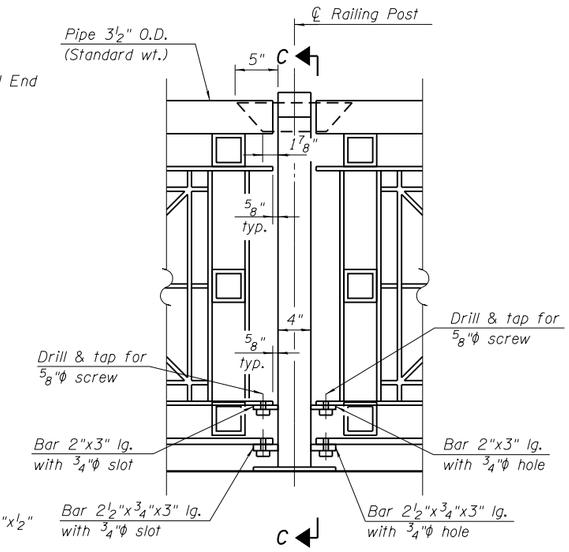

TYPICAL POST

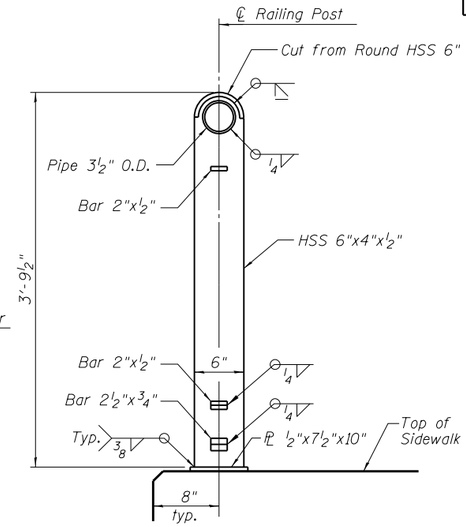

SECTION C-C

Note:
All rail connection bolts shall be tack welded to the top of the rail and ground smooth.

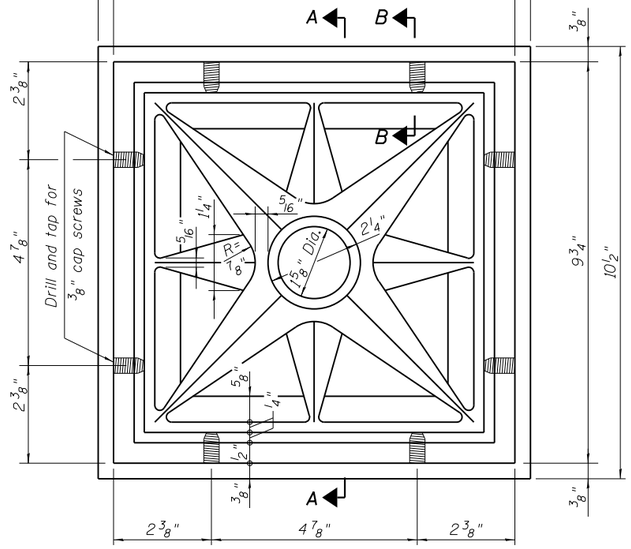

CAST IRON ORNAMENT FOR RAILING PANELS

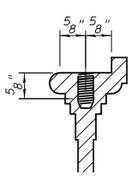

SECTION B-B

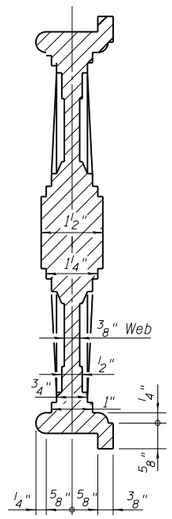

SECTION A-A

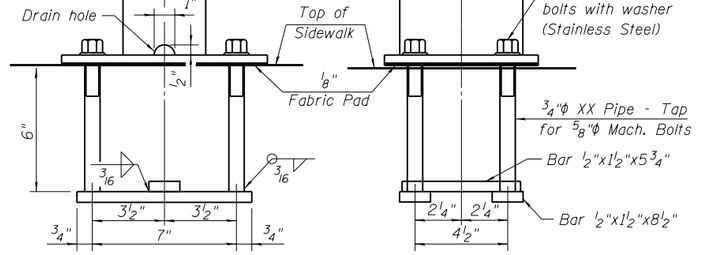

ANCHOR BOLT DETAILS

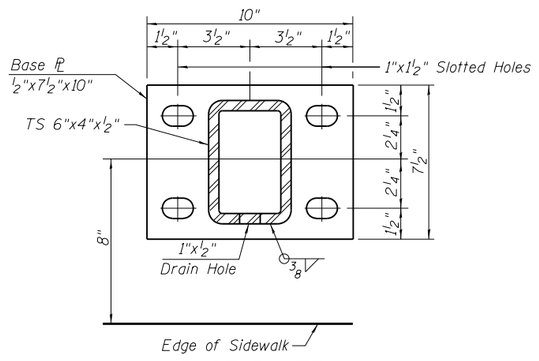

BASE PLATE

NOTES

1. See Special Provision "Ornamental Railing" for requirements.
2. For additional railing details and post spacing see dwg. A-01 and A-02

BILL OF MATERIAL

ITEM	UNIT	QUANTITY
Ornamental Railing	Foot	653

...\0166090-E5038-016-HR.dgn
11/29/2017 1:46:39 PM

DESIGN:	CA			
DRAWN:	MTR			
CHECKED:	SF			
APPROVED:	DF			
DATE:	11/29/2017			
SCALE:				
FILE:	NO.	BY	DATE	DESCRIPTION
	REVISIONS			

KEY PLAN:

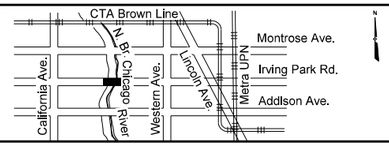

CDOT
CHICAGO DEPARTMENT OF TRANSPORTATION

BOWMAN, BARRETT & ASSOCIATES INC.
CONSULTING ENGINEERS
Chicago, Illinois
312.228.0100
www.bbandainc.com

W. IRVING PARK ROAD AT NORTH BRANCH CHICAGO RIVER

ORNAMENTAL HAND RAILING DETAILS STRUCTURE NO. 016–6090

PROJECT NO.	E-5-038
DRAWING NO.	S–18
CONTRACT NO.	XXXXX

TOTAL SHEETS	SHEET NO.
184	119

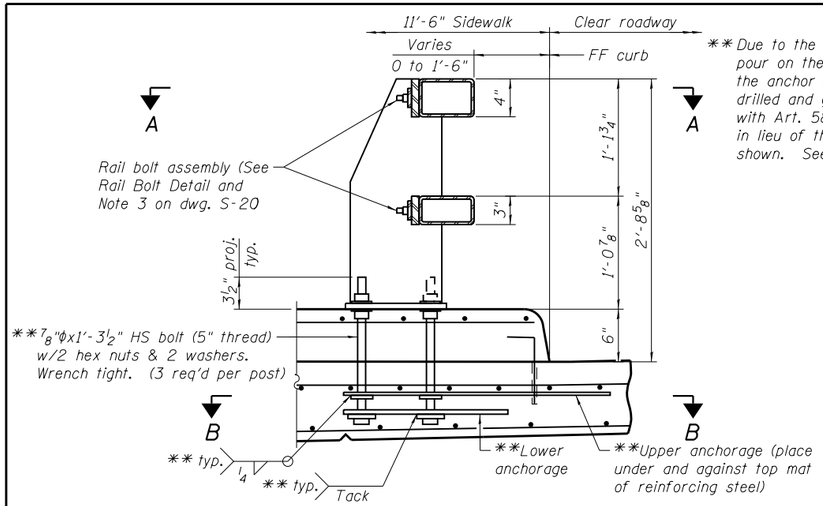

**Due to the Stage IV sidewalk pour on the bridge and approach, the anchor bolts shown can be drilled and grouted in accordance with Art. 584 of the Std. Specs. in lieu of the anchorage system shown. See Special Provisions.

TYPICAL ASSEMBLY DETAIL ON BRIDGE AND APPROACH SLAB

(Shown near ℄ post)
(Bridge slab shown, approach slab similar)
(See dwg. S-13, S-22 and S-23 for Reinforcement Details)
(See dwg. S-21 for Special Curb Details)

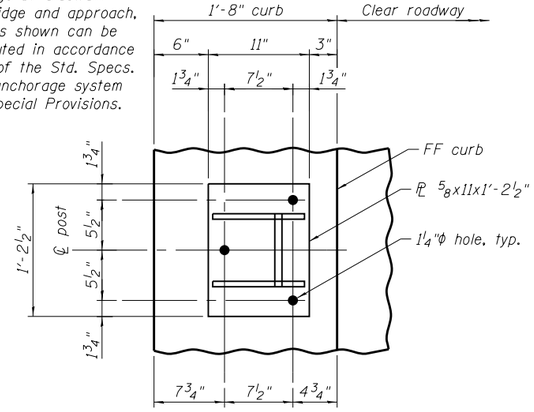

VIEW A-A

(Anchor bolts, rails and rail bolts not shown)

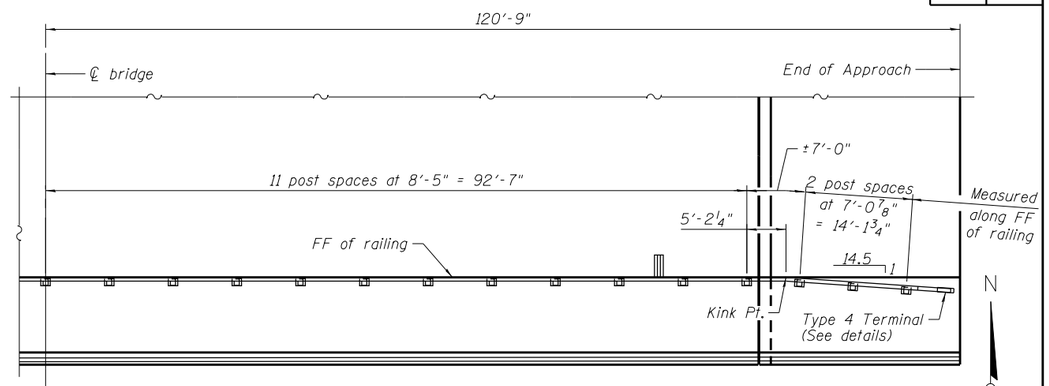

PLAN (RAILING TERMINAL ON APPROACH SLAB)

(46 posts req'd on bridge)
(12 posts req'd on approach slabs)
(SE. side of bridge shown, NW. side shown opposite hand)

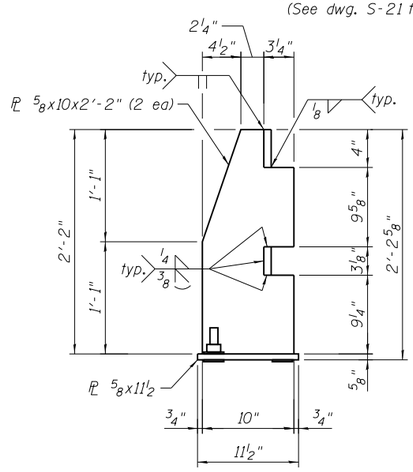

SIDE VIEW

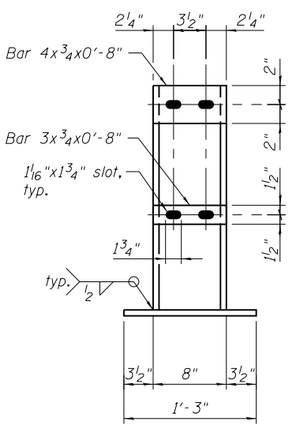

FRONT VIEW

POST DETAILS

(See View A-A for anchor bolt hole spacing)

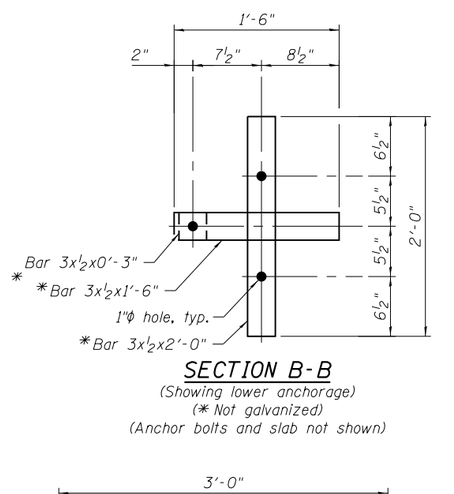

SECTION B-B

(Showing lower anchorage)
(* Not galvanized)
(Anchor bolts and slab not shown)

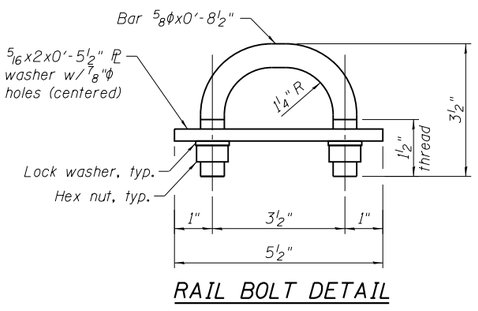

RAIL BOLT DETAIL

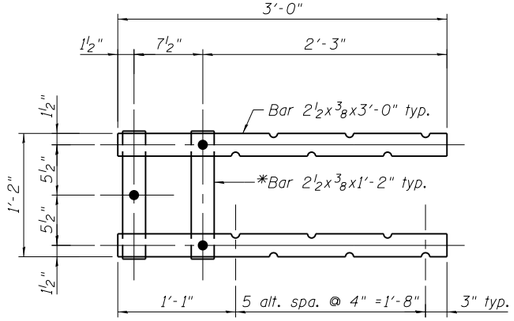

SECTION B-B

(Showing upper anchorage)
(* Not galvanized)
(Anchor bolts and slab not shown)

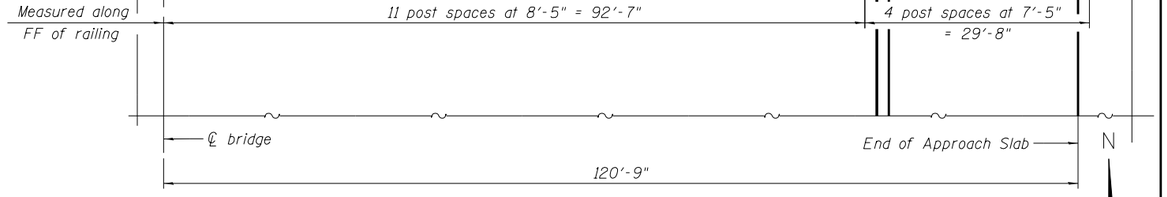

PLAN (RAILING ON APPROACH SLAB)

(NE. side of bridge shown, SW. side rotated 180°)

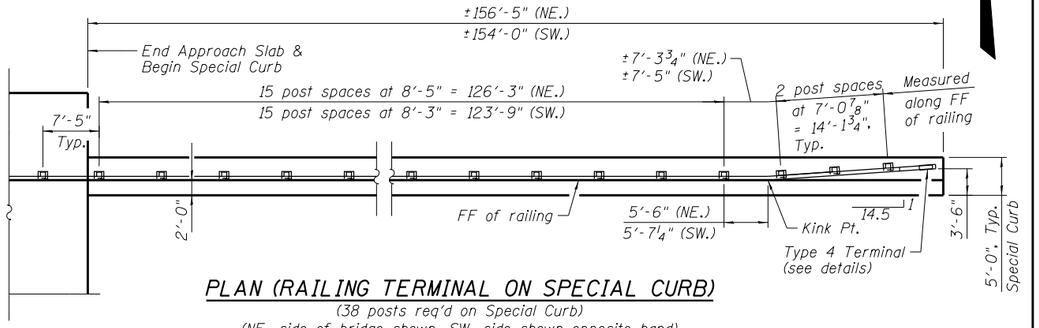

PLAN (RAILING TERMINAL ON SPECIAL CURB)

(38 posts req'd on Special Curb)
(NE. side of bridge shown, SW. side shown opposite hand)
(See dwg. S-21 for reinforcement details)

DESIGN: –				
DRAWN: LAM				
CHECKED: –				
APPROVED: DF				
DATE: 11/29/2017				
SCALE:				
FILE:	NO.	BY	DATE	DESCRIPTION
	REVISIONS			

KEY PLAN:

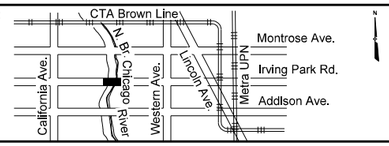

CDOT
CHICAGO DEPARTMENT OF TRANSPORTATION

BOWMAN, BARRETT & ASSOCIATES INC.
CONSULTING ENGINEERS
Chicago, Illinois
312.228.0100
www.bbandainc.com

W. IRVING PARK ROAD AT NORTH BRANCH CHICAGO RIVER

WYOMING RAILING DETAILS I
STRUCTURE NO. 016–6090

PROJECT NO.	E-5-038
DRAWING NO.	S–19
CONTRACT NO.	XXXXX

...\0166090-E5038-017-WR01.dgn
11/29/2017 1:46:41 PM

TOTAL SHEETS	SHEET NO.
184	120

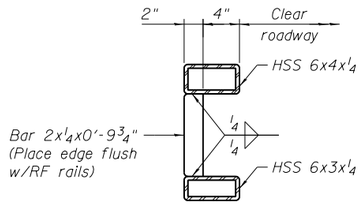

BRACE BAR DETAIL

(See Note 11)

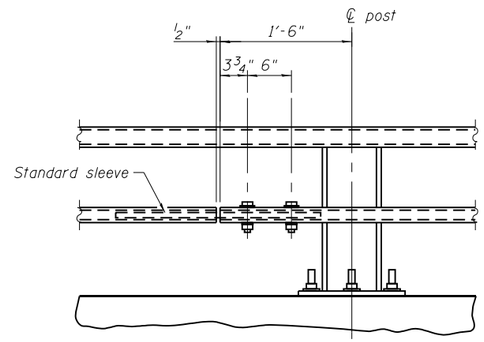

STANDARD SPLICE

(Top or bottom rail)

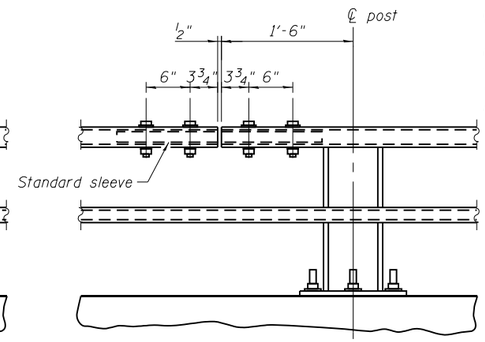

DOUBLE-BOLTED SPLICE

(Top or bottom rail)

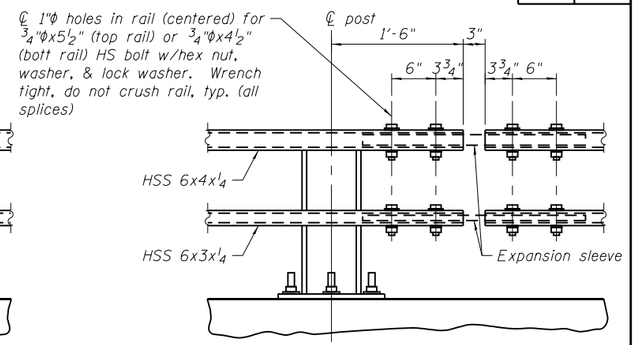

EXPANSION SPLICE

(Top or bottom rail)

SPLICE DETAILS

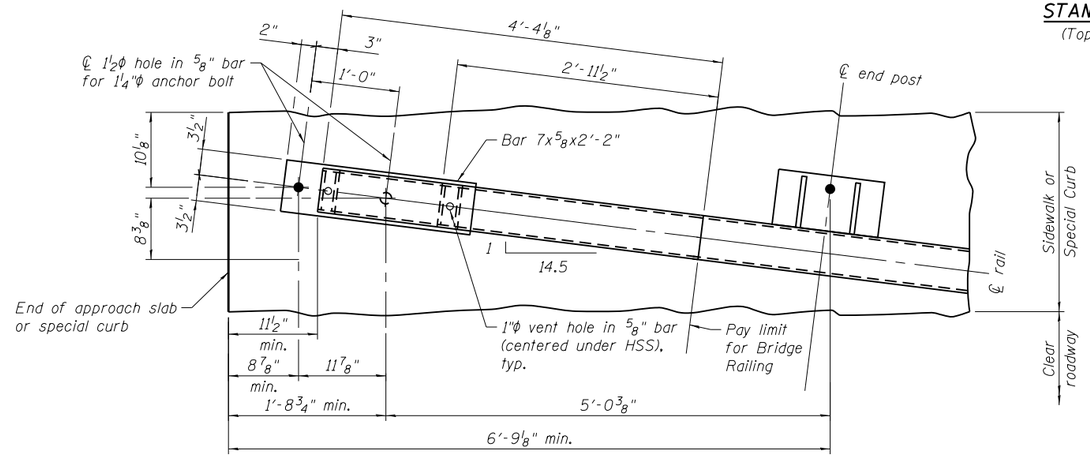

PLAN AT TERMINAL TYPE 4

(Bolts not shown)
(See sheet S-19 for additional railing terminal information)

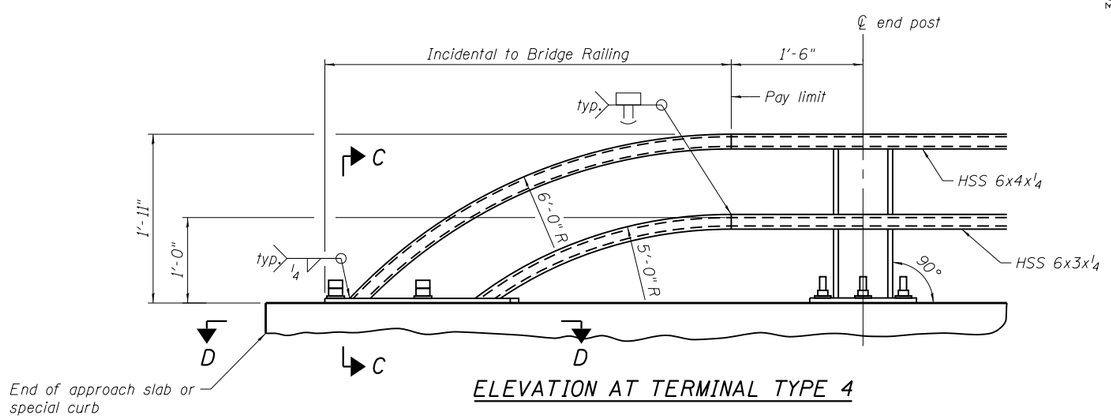

ELEVATION AT TERMINAL TYPE 4

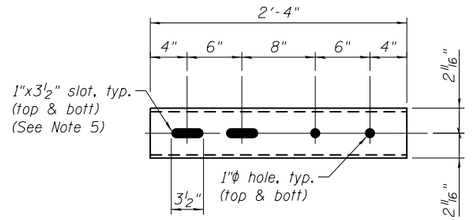

STANDARD SLEEVE

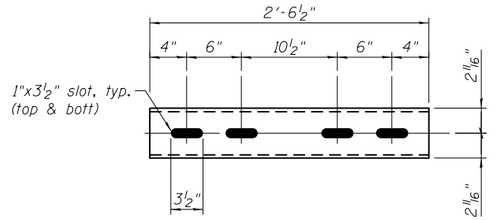

EXPANSION SLEEVE

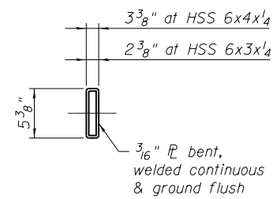

END VIEW

SLEEVE DETAILS

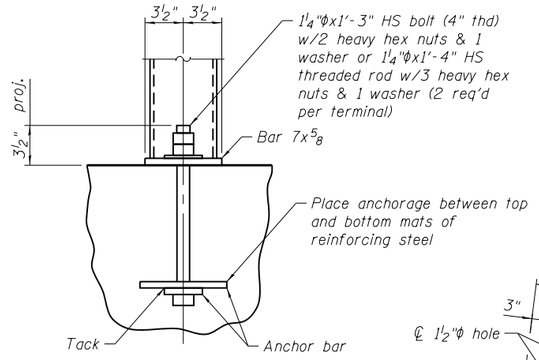

SECTION C-C

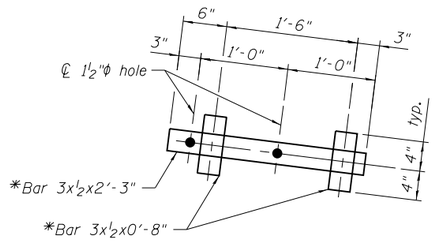

SECTION D-D

(Showing anchor bars)
(*Not galvanized)

NOTES

1. Ensure the expansion splice is located in the railing panel which passes over the bridge expansion joint as indicated on the plan.
2. Anchor bolts may be tack welded to anchorage (shop or field).
3. At post locations, drill two 1 1/16" ϕ holes in the rails to receive rail bolts (shop or field). See Post Details for hole spacing.
4. Before installing rails, paint cut, drilled, or otherwise damaged surface areas of the railing components with two coats of zinc rich paint conforming to the requirements of ASTM A 780.
5. After installing the rails, paint exposed bolt threads with two coats of zinc rich paint conforming to the requirements of ASTM A 780.
6. Either top or bottom rail in terminal section may be the longer rail.
7. Ensure each rail length is continuous over a minimum of two posts. Railing that is part of a type 4 terminal is continuous over a minimum of two posts.
8. Splices may be located on either side of post.
9. Not more than one splice is permitted per side of post, except at expansion splices.
10. Do not shop splice rails.
11. Ensure a brace bar is placed 2'-0" from the splice of the shorter tube at type 4 terminals.
12. Wyoming Railing shall be paid for at the contract unit price per lineal foot for Steel Railing (Special).

DESIGN: –				
DRAWN: LAM				
CHECKED: –				
APPROVED: DF				
DATE: 11/29/2017				
SCALE:				
FILE:	NO.	BY	DATE	DESCRIPTION
	REVISIONS			

KEY PLAN:

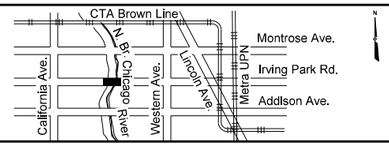

CDOT
CHICAGO DEPARTMENT OF TRANSPORTATION

BOWMAN, BARRETT & ASSOCIATES INC.
CONSULTING ENGINEERS
Chicago, Illinois
312.228.0100
www.bbandainc.com

W. IRVING PARK ROAD AT NORTH BRANCH CHICAGO RIVER

WYOMING RAILING DETAILS II
STRUCTURE NO. 016-6090

PROJECT NO.	E-5-038
DRAWING NO.	S-20
CONTRACT NO.	XXXXX

...\0166090-E5038-018-WR02.dgn
4/27/2018 3:12:04 PM

TOTAL SHEETS	SHEET NO.
184	121

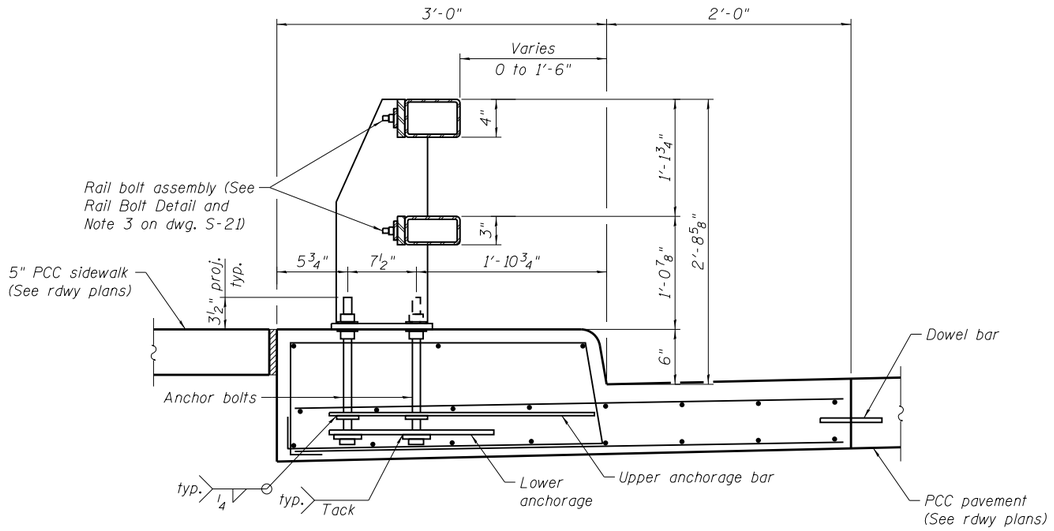

TYPICAL ASSEMBLY DETAIL ON SPECIAL CURB

(Shown near ℄ post)

(See dwg. S-19 for Typical Assembly Detail on Bridge and Approach)

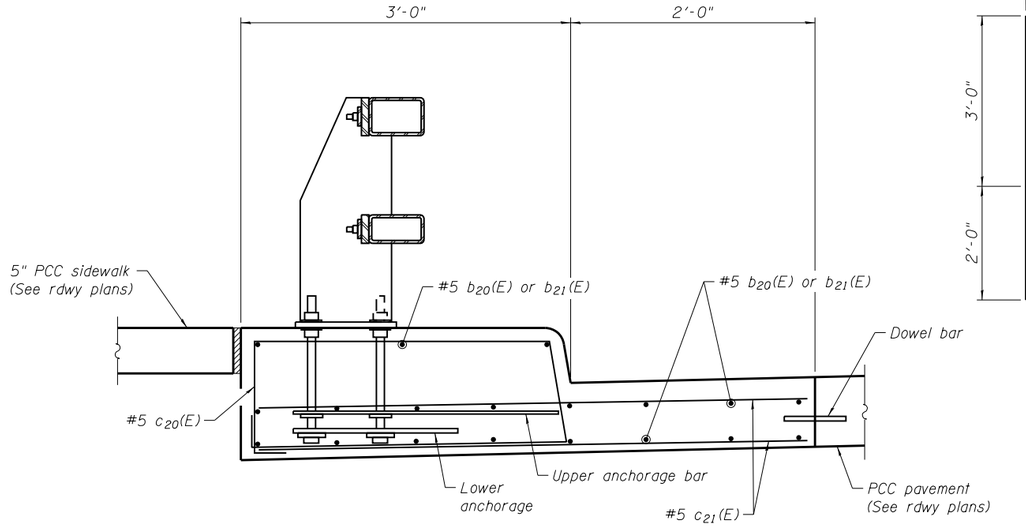

TYPICAL SPECIAL CURB REINFORCEMENT

(Shown near ℄ post)

BILL OF MATERIAL

Bar	No.	Size	Length	Shape
b_{20}(E)	95	#5	33'-11"	
b_{21}(E)	95	#5	33'-5"	
c_{20}(E)	312	#5	4'-8"	
c_{21}(E)	312	#5	8'-1"	
Steel Railing (Special)			Foot	795
High Performance Concrete Superstructures			Cu. Yd.	58
Reinforcement Bars, Epoxy Coated			Pound	10,830
Protective Concrete Sealer			Sq. Yd.	121

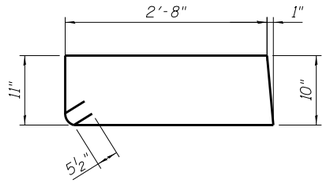

BAR c21(E)

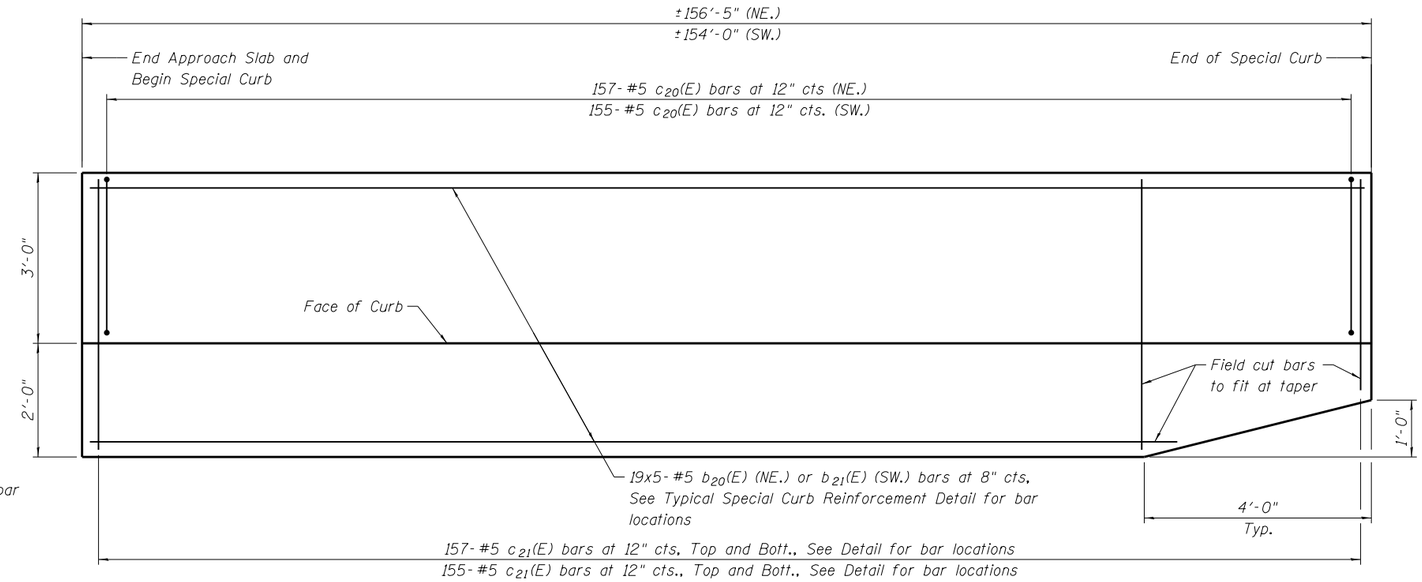

PLAN OF SPECIAL CURB SHOWING REINFORCEMENT

(See dwg. S-19 for Limits of Special Curb)

...\0166090-E5038-019-WR03.dgn
11/29/2017 1:46:46 PM

DESIGN: CA				
DRAWN: LAM				
CHECKED: CA				
APPROVED: DF				
DATE: 11/29/2017				
SCALE:				
FILE:	NO.	BY	DATE	DESCRIPTION
	REVISIONS			

KEY PLAN:

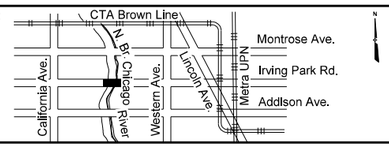

CDOT
CHICAGO DEPARTMENT OF TRANSPORTATION

BOWMAN, BARRETT & ASSOCIATES INC.
CONSULTING ENGINEERS
Chicago, Illinois
312.228.0100
www.bbandainc.com

W. IRVING PARK ROAD AT NORTH BRANCH CHICAGO RIVER

WYOMING RAILING DETAILS III
STRUCTURE NO. 016-6090

PROJECT NO.	E-5-038
DRAWING NO.	S-21
CONTRACT NO.	XXXXX

TOTAL SHEETS	SHEET NO.
184	122

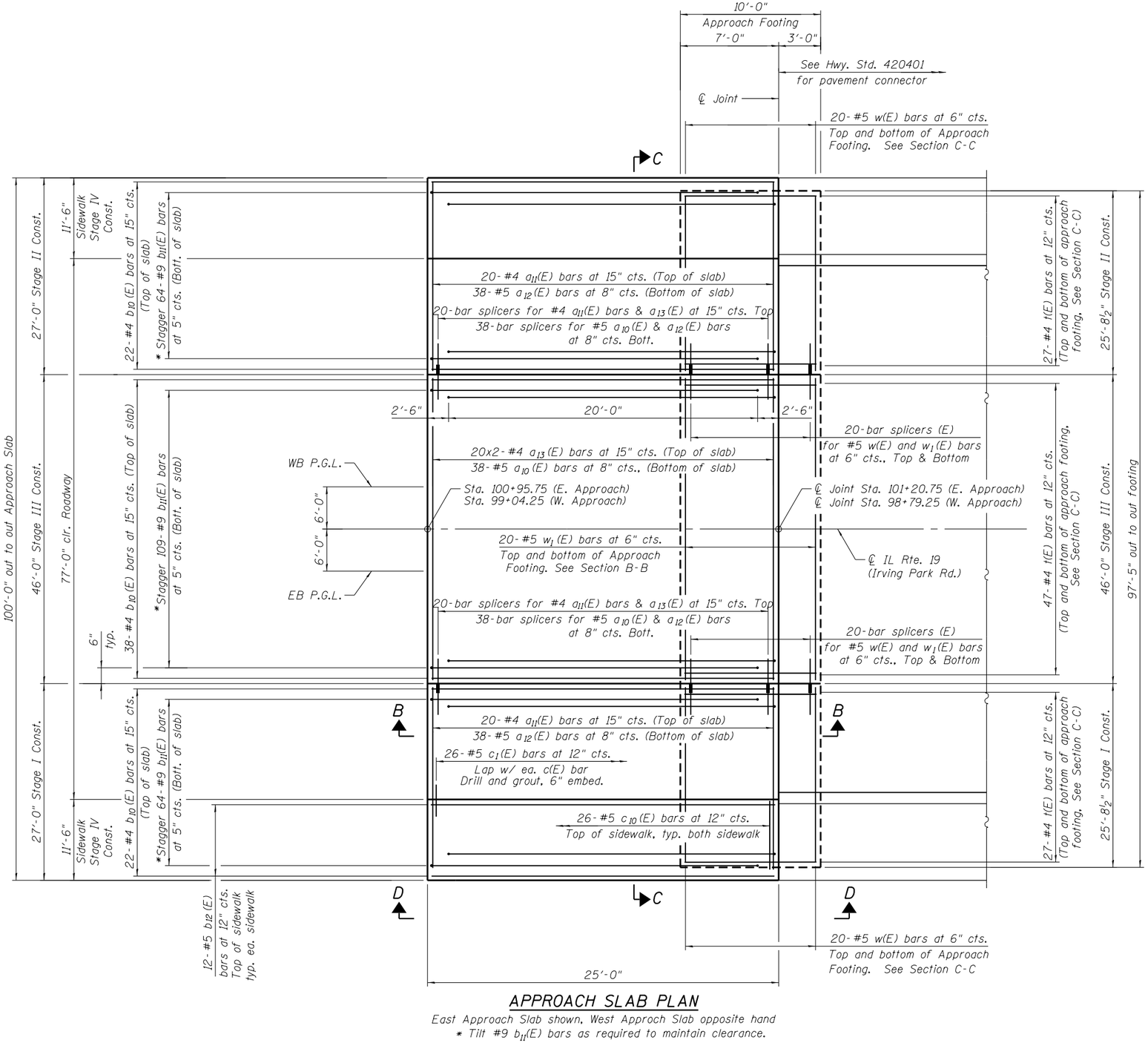

APPROACH SLAB PLAN

East Approach Slab shown. West Approch Slab opposite hand
* Tilt #9 b_{11}(E) bars as required to maintain clearance.

** Cost included with High Performance Concrete Superstructures.

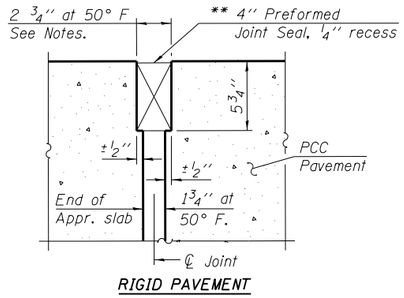

RIGID PAVEMENT

DETAIL A

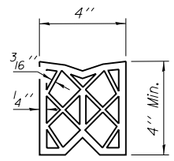

PREFORMED JOINT SEAL

MIN. BAR LAP

#4 - 2'-5"
#5 - 3'-6"

N

Notes:

See Drawing No. S-23 for Sections B-B & C-C and View D-D.

The joint opening shall be determined per Article 520.04 except that on jointless structures, the distance described as the bridge length between the nearest fixed bearings each way from the joint shall be taken as half the bridge length plus the approach slab length. The minimum dimension shall be 1/2" for installation purposes.

...\0166090-E5038-020-AS01.dgn
11/29/2017 1:46:47 PM

DESIGN: DF				
DRAWN: LAM				
CHECKED: DF				
APPROVED: DF				
DATE: 11/29/2017				
SCALE:				
FILE:	NO.	BY	DATE	DESCRIPTION
	REVISIONS			

KEY PLAN:

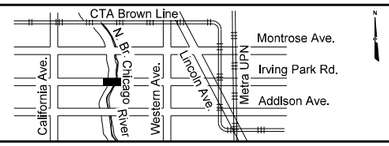

CDOT
CHICAGO DEPARTMENT OF TRANSPORTATION

BOWMAN, BARRETT & ASSOCIATES INC.
CONSULTING ENGINEERS
Chicago, Illinois
312.228.0100
www.bbandainc.com

W. IRVING PARK ROAD AT NORTH BRANCH CHICAGO RIVER

BRIDGE APPROACH SLAB PLAN
STRUCTURE NO. 016-6090

PROJECT NO. E-5-038
DRAWING NO. S-22
CONTRACT NO. XXXXX

TOTAL SHEETS	SHEET NO.
184	123

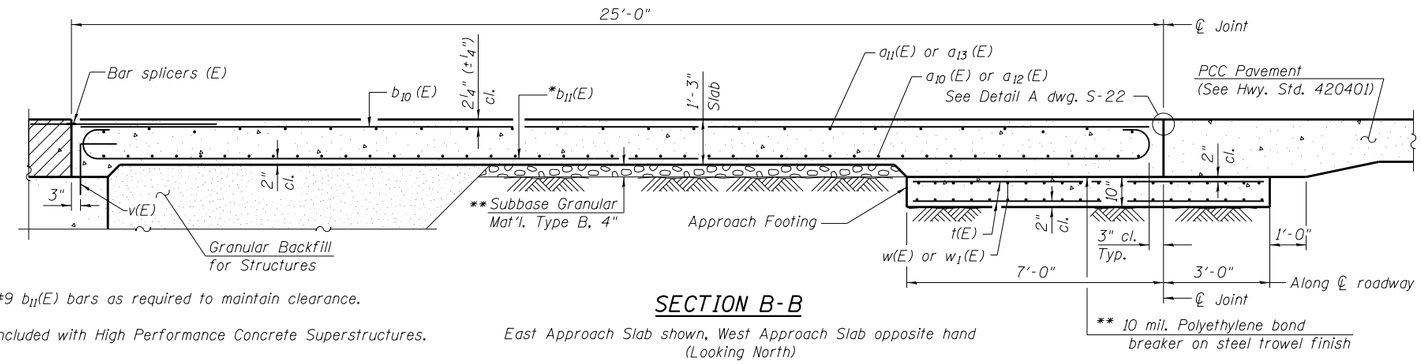

* Tilt #9 b_{11}(E) bars as required to maintain clearance.

** Cost included with High Performance Concrete Superstructures.

SECTION B-B

East Approach Slab shown, West Approach Slab opposite hand
(Looking North)

Notes:

Approach slab & sidewalks shall be paid for as High Performance Concrete Superstructures.
Approach footing concrete shall be paid for as High Performance Concrete Structures.
Reinforcement shall be paid for as Reinforcement Bars, Epoxy Coated.
For v(E) bar details, see dwg. S-32 and S-41.
The approach footing maximum applied service bearing pressure (Qmax) = 2.0 ksf.
For bar splicer details, see dwg. S-57.
Cost of excavation for approach footing included with High Performance Concrete Structures.
For Granular Backfill for Structures and drainage treatment details, see dwg. S-38 and S-47.

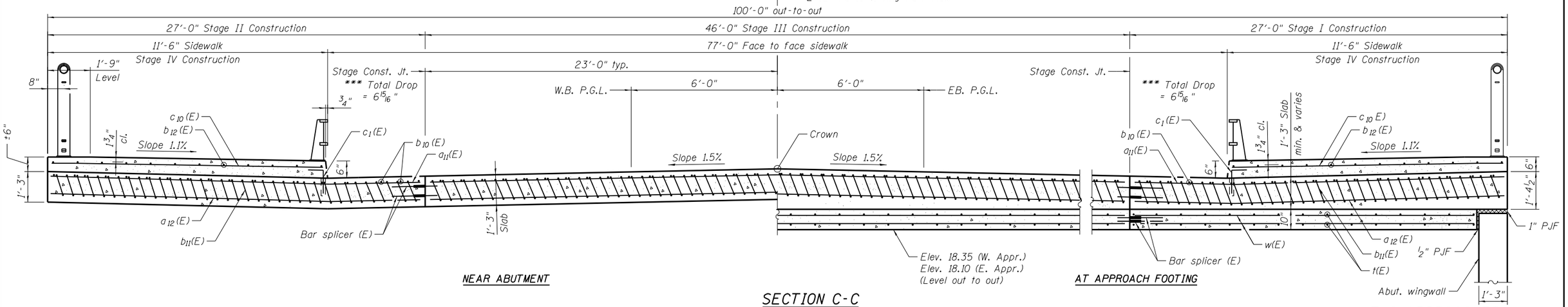

NEAR ABUTMENT

SECTION C-C

AT APPROACH FOOTING

TWO APPROACHES

*** From Crown

(1) Drill and grout bars according to Article 509.06 of the Standard Specifications. Cored holes shall be roughened or scored per manufacturer's recommendations.

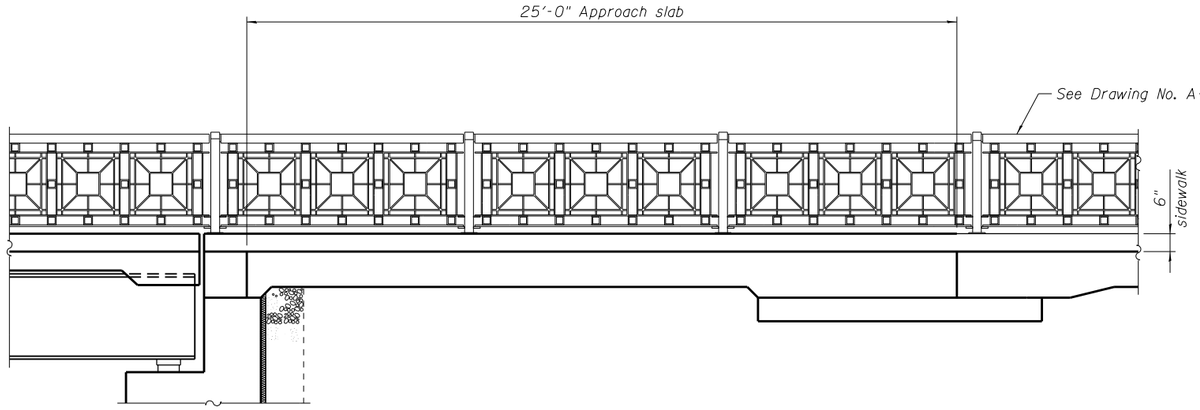

VIEW D-D

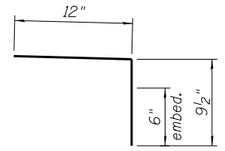

BAR c_1(E)

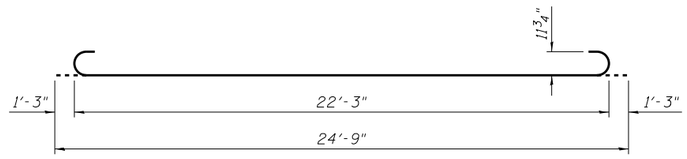

BAR b_{11}(E)

TWO APPROACHES BILL OF MATERIAL

	Bar	No.	Size	Length	Shape
	a_{10}(E)	76	#5	45'-9"	
	a_{11}(E)	80	#4	26'-8"	
	a_{12}(E)	152	#5	26'-8"	
	a_{13}(E)	80	#4	24'-2"	
	b_{10}(E)	164	#4	24'-8"	
	b_{11}(E)	474	#9	24'-9"	
	b_{12}(E)	50	#5	24'-8"	
(1)	c_1(E)	104	#5	1'-9½"	
	c_{10}(E)	104	#5	11'-1"	
	t(E)	404	#4	9'-8"	
	w(E)	160	#5	25'-5"	
	w_1E)	80	#5	45'-9"	
	Bridge Deck Grooving		Sq. Yd.	417	
	Protective Concrete Sealer		Sq. Yd.	1,069	
	High Performance Concrete Superstructures		Cu. Yd.	244.8	
	High Performance Concrete Structures		Cu. Yd.	61.0	
	Reinforcement Bars, Epoxy Coated		Pound	66,520	

...\0166090-E5038-021-AS02.dgn
11/29/2017 1:46:50 PM

DESIGN: CA				
DRAWN: LAM				
CHECKED: DF				
APPROVED: DF				
DATE: 11/29/2017				
SCALE:				
FILE:	NO.	BY	DATE	DESCRIPTION
	REVISIONS			

KEY PLAN:

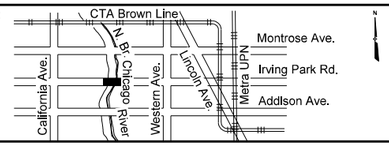

CDOT
CHICAGO DEPARTMENT OF TRANSPORTATION

BOWMAN, BARRETT & ASSOCIATES INC.
CONSULTING ENGINEERS
Chicago, Illinois
312.228.0100
www.bbandainc.com

W. IRVING PARK ROAD AT NORTH BRANCH CHICAGO RIVER

BRIDGE APPROACH SLAB DETAILS
STRUCTURE NO. 016-6090

PROJECT NO. E-5-038
DRAWING NO. S-23
CONTRACT NO. XXXXX

TOTAL SHEETS	SHEET NO.
184	124

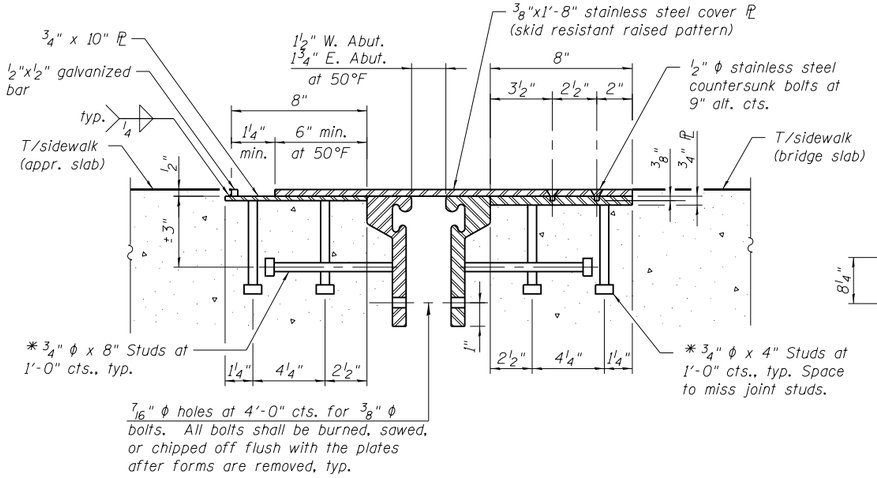

SECTION THRU ROLLED RAIL JOINT IN SIDEWALK

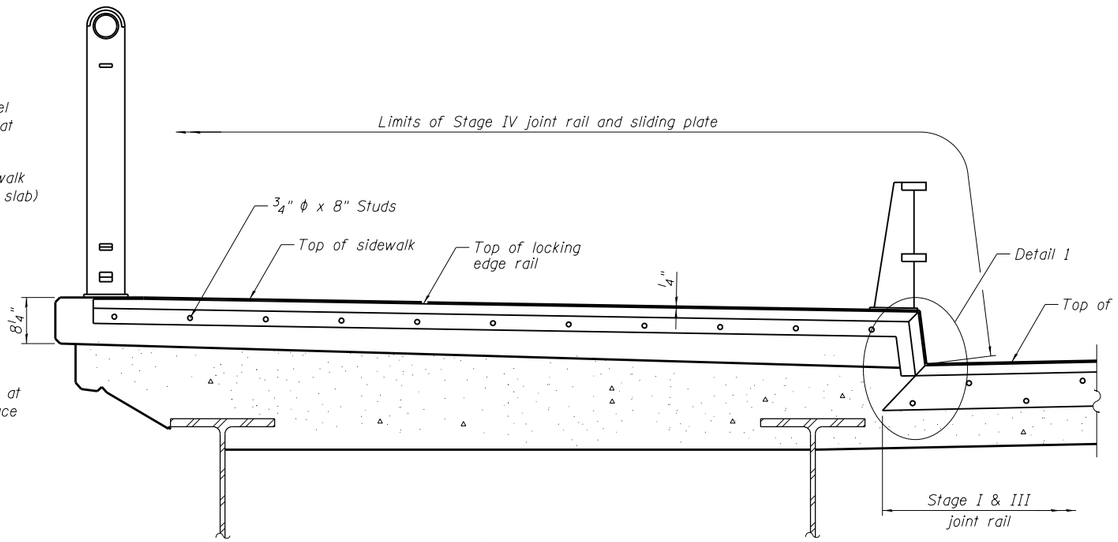

SECTION A-A TYPICAL END TREATMENT AT SIDEWALK

** Shorter plates with a single row of studs at 12" cts. may be necessary on medians which are shallower than 9". See manufacturers recommendation.

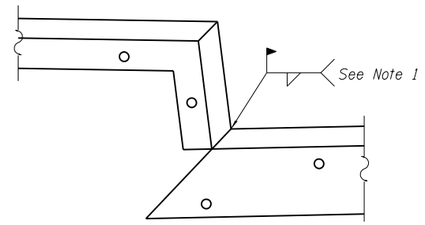

DETAIL 1

(Sliding PL not shown for clarity)

Note 1:
Expose Stage I/III joint rail knuckle & field weld sidewalk joint rail knuckles. Line up joint rail opening allowing for a continuous strip seal installation.

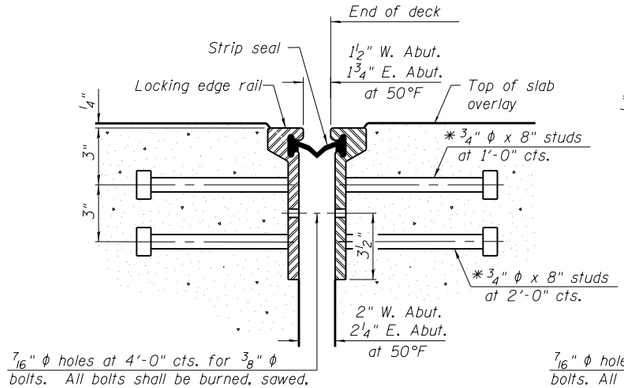

SECTION THRU ROLLED RAIL JOINT IN DECK

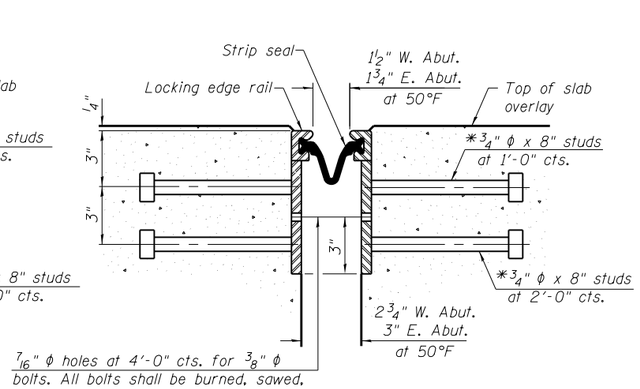

SECTION THRU WELDED RAIL JOINT IN DECK

* Granular or solid flux filled headed studs conforming to Article 1006.32 of the Std. Specs., automatically end welded.

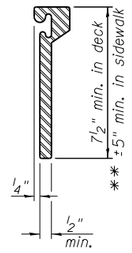

ROLLED EXTRUDED RAIL

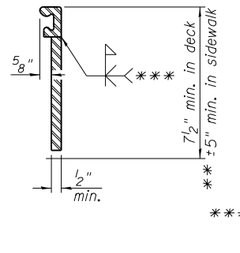

WELDED RAIL

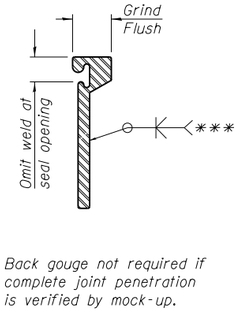

*** Back gouge not required if complete joint penetration is verified by mock-up.

LOCKING EDGE RAIL SPLICE

The inside of the locking edge rail groove shall be free of weld residue.
Rolled rail shown, welded rail similar.

LOCKING EDGE RAILS

Notes:
The strip seal shall be made continuous and shall have a minimum thickness of 1/4". The configuration of the strip seal shall match the configuration of the Locking Edge Rails. Open or "webbed" strip seal gland configurations are not permitted. The gland shall be sized for a maximum rated movement of 4 inches.

The Locking Edge Rails depicted are conceptual only, except for the minimum dimensions shown. The actual configuration of the Locking Edge Rails and matching strip seal may vary from manufacturer to manufacturer. Flanged edge rails will not be allowed. Locking Edge Rails may be spliced at slope discontinuities.

The manufacturer's recommended installation methods shall be followed.

The joint opening and deck dimensions detailed on the superstructure are based on a rolled rail expansion joint. If the Contractor elects to use the welded rail expansion joint, the opening and deck dimensions shall be modified according to the dimensions detailed on this sheet. Required modifications shall be made at no additional cost to the City.

All steel components shall be galvanized after fabrication according to Article 520.03 of the Standard Specifications.

Maximum space between rail segments shall be 3/16", sealed with a suitable sealant. Joints in rails within 10 ft. of curbs shall be welded.

BILL OF MATERIAL

Item	Unit	Total
Preformed Joint Strip Seal	Foot	202

DESIGN: CA				
DRAWN: LAM				
CHECKED: DF				
APPROVED: DF				
DATE: 11/29/2017				
SCALE:				
FILE:	NO.	BY	DATE	DESCRIPTION
	REVISIONS			

KEY PLAN:

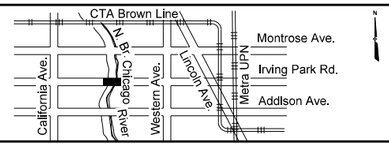

CDOT
CHICAGO DEPARTMENT OF TRANSPORTATION

BOWMAN, BARRETT & ASSOCIATES INC.
CONSULTING ENGINEERS
Chicago, Illinois
312.228.0100
www.bbandainc.com

W. IRVING PARK ROAD AT NORTH BRANCH CHICAGO RIVER

PREFORMED JOINT STRIP SEAL STRUCTURE NO. 016-6090

PROJECT NO. E-5-038
DRAWING NO. S-24
CONTRACT NO. XXXXX

11/29/2017 1:46:52 PM ...\0166090-E5038-022-PJS.dgn

TOTAL SHEETS	SHEET NO.
184	125

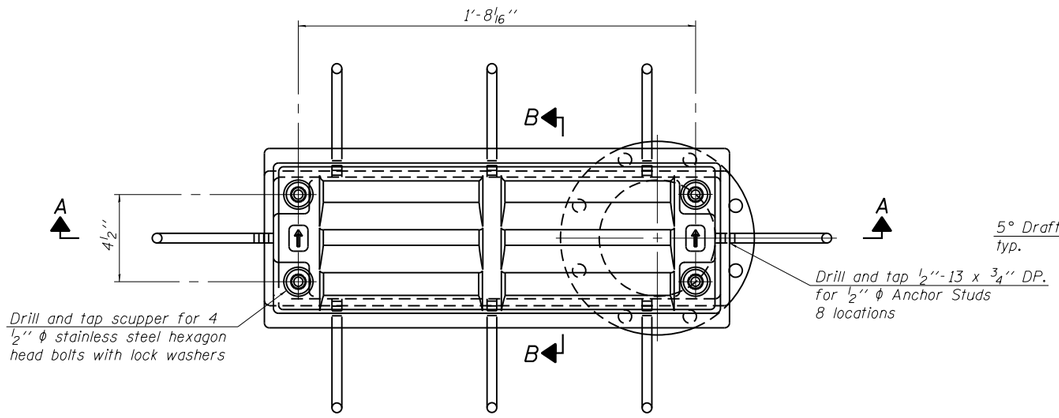

PLAN

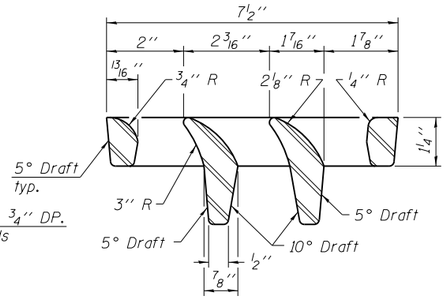

VANE GRATE DETAIL

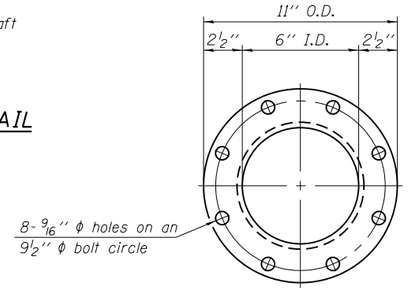

Notes:

All cast iron parts shall be gray iron conforming to the requirements of AASHTO M 105, Class 35B.

Bolts, anchor studs, washers and nuts shall conform to the requirements of ASTM A 307 and shall be galvanized according to AASHTO M 232.

Downspouts located on the exterior side of a painted steel fascia beam shall be painted with the finish coat specified for the exterior side of the fascia beam.

As an alternate, bolts, anchor studs, washers and nuts may be stainless steel according to Article 1006.29(d) of the Standard Specifications.

Structural steel weldments of equal sections and of the same configuration may be substituted for the cast iron scupper frame. Fillet or full penetration welds shall be used for the weldments. Details shall be submitted to the Engineer for approval. Structural steel weldments shall not be substituted for the cast iron scupper grate. Structural steel frames and downspouts shall be galvanized according to AASHTO M111.

The Contractor shall take appropriate measures to assure that Protective Coat is not applied to the scupper.

Cost of the Grate, Frame, Downspout, Anchor Studs, Bolts, Washers and Nuts including complete installation of the scupper shall be paid for at the contract unit price each for Drainage Scupper, DS-12.

Alternate fiberglass downspout conforming to ASTM D 2996 with a short-time rupture strength hoop tensile stress of 30,000 psi min. may be used in lieu of the cast iron or steel equivalent.

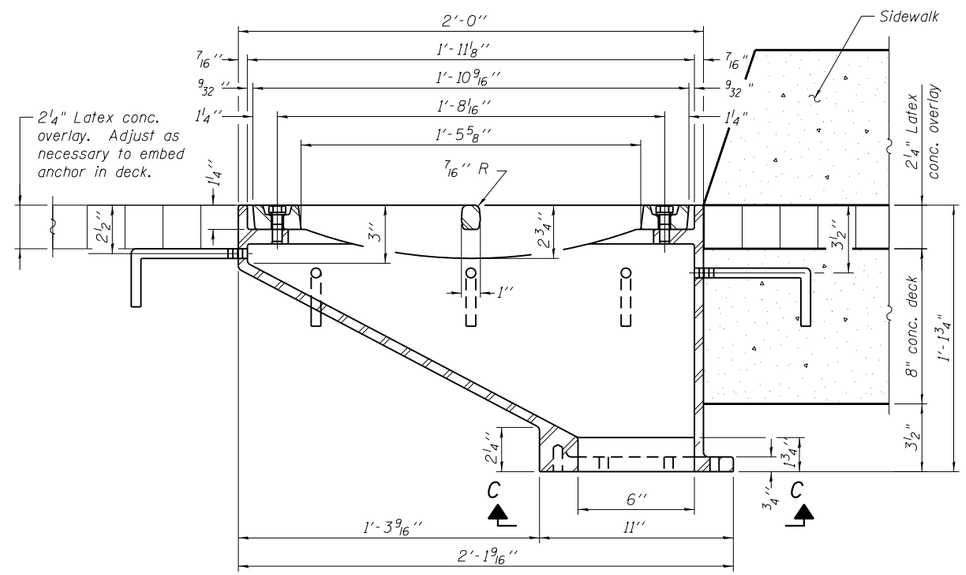

SECTION A-A

See dwg. S-14 for scupper location relative to sidewalk.

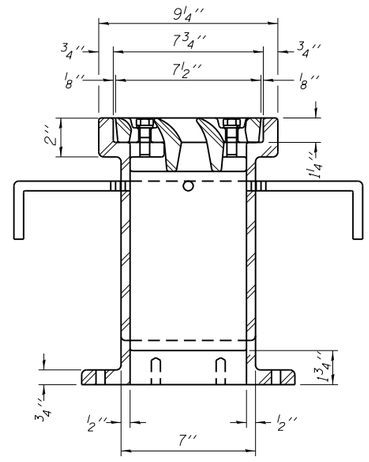

SECTION B-B

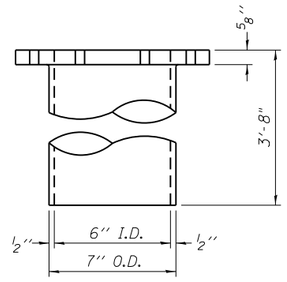

DOWNSPOUT

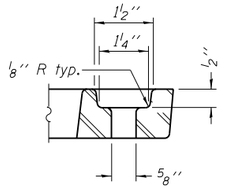

BOLT HOLE DETAIL

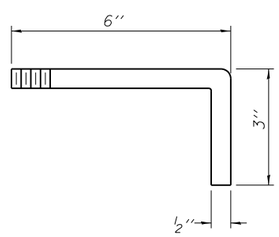

ANCHOR STUD DETAIL

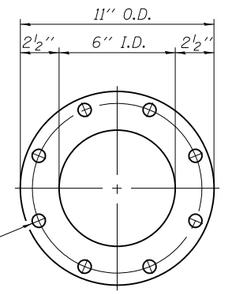

VIEW C-C

BILL OF MATERIAL

ITEM	UNIT	QUANTITY
Drainage Scupper, DS-12	Each	4

DESIGN: CA				
DRAWN: LAM				
CHECKED: DF				
APPROVED: DF				
DATE: 11/29/2017				
SCALE:				
FILE:	NO.	BY	DATE	DESCRIPTION
	REVISIONS			

KEY PLAN:

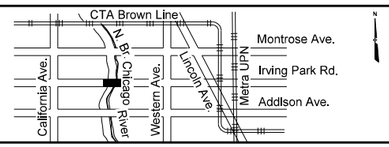

CDOT
CHICAGO DEPARTMENT OF TRANSPORTATION

BOWMAN, BARRETT & ASSOCIATES INC.
CONSULTING ENGINEERS
Chicago, Illinois
312.228.0100
www.bbandainc.com

W. IRVING PARK ROAD AT NORTH BRANCH CHICAGO RIVER

DRAINAGE SCUPPER, DS-12
STRUCTURE NO. 016-6090

PROJECT NO. E-5-038

DRAWING NO. S-25

CONTRACT NO. XXXXX

...\0166090-E5038-023-DS.dgn
11/29/2017 1:46:54 PM

TOTAL SHEETS	SHEET NO.
184	126

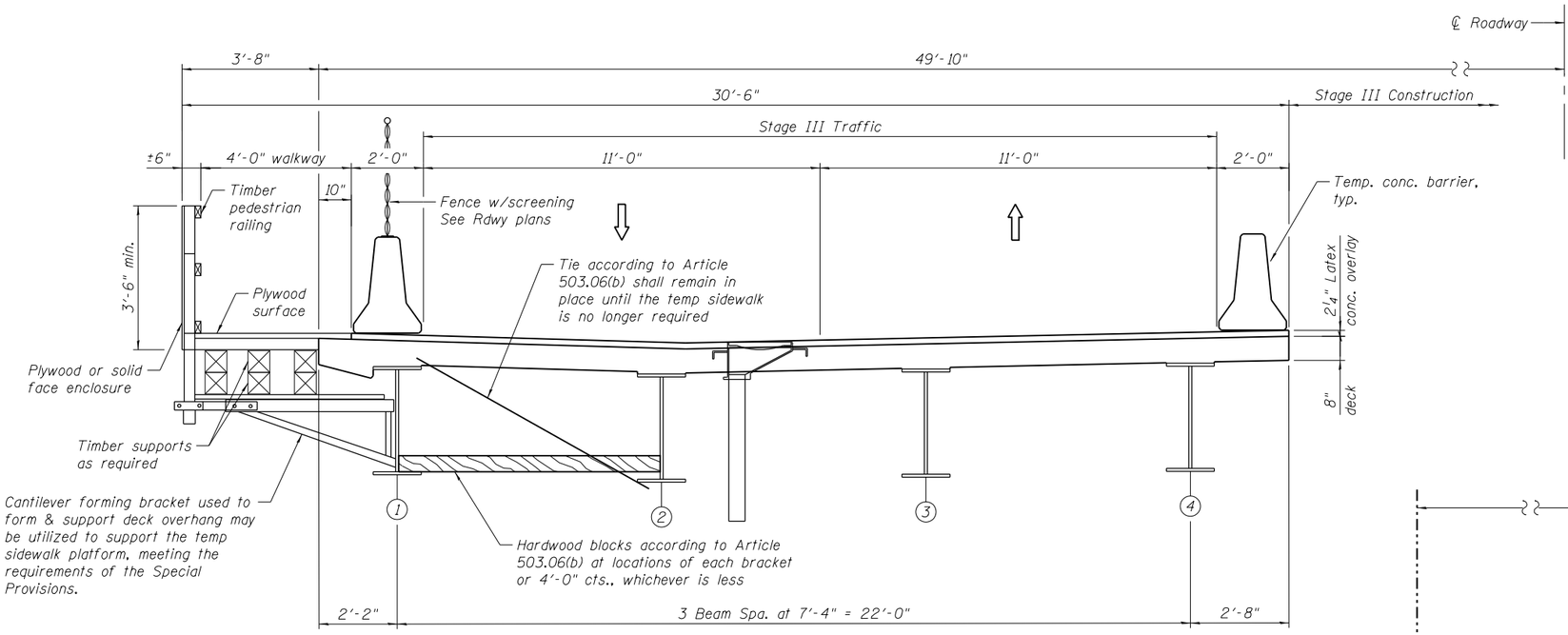

SECTION THRU BRIDGE - STAGE III CONSTRUCTION

(Looking East)

DESIGN SPECIFICATIONS

2014 AASHTO LRFD Bridge Design Specifications, 7th Edition with 2015 Interims

LOADING

DL: 60 psf (unfactored) max.
LL: 90 psf (unfactored)
Wind: Per AASHTO Chapter 3
Handrail Live Load: AASHTO Chapter 13

NOTES

1. Contractor shall refer to Special Provision "Temporary Sidewalk" for additional requirements.
2. Contractor shall review maintenance of traffic plans. See MOT dwg. MOT-5 for limits of temporary sidewalk support system. In addition, see dwg. S-5 for temporary concrete barrier details.
3. Details shown on this drawing are conceptual in nature and the Contractor shall develop a temporary sidewalk support system according to the requirements of the special provision and plan details.
4. Contractor shall inspect the condition of the existing retaining wall, which is to remain in the northeast quadrant of the bridge, and determine if the existing condition is adequate to support the temporary sidewalk. If the wall is determined to be inadequate to support temporary sidewalk, ground supports may be required. Alternate support systems shall be included in this item at no additional cost to the Department.
5. Temporary Sidewalk Support System shall be paid for at the contract unit price per square foot for Temporary Sidewalk.

BILL OF MATERIAL

ITEM	UNIT	QUANTITY
Temporary Sidewalk	Sq Ft	963

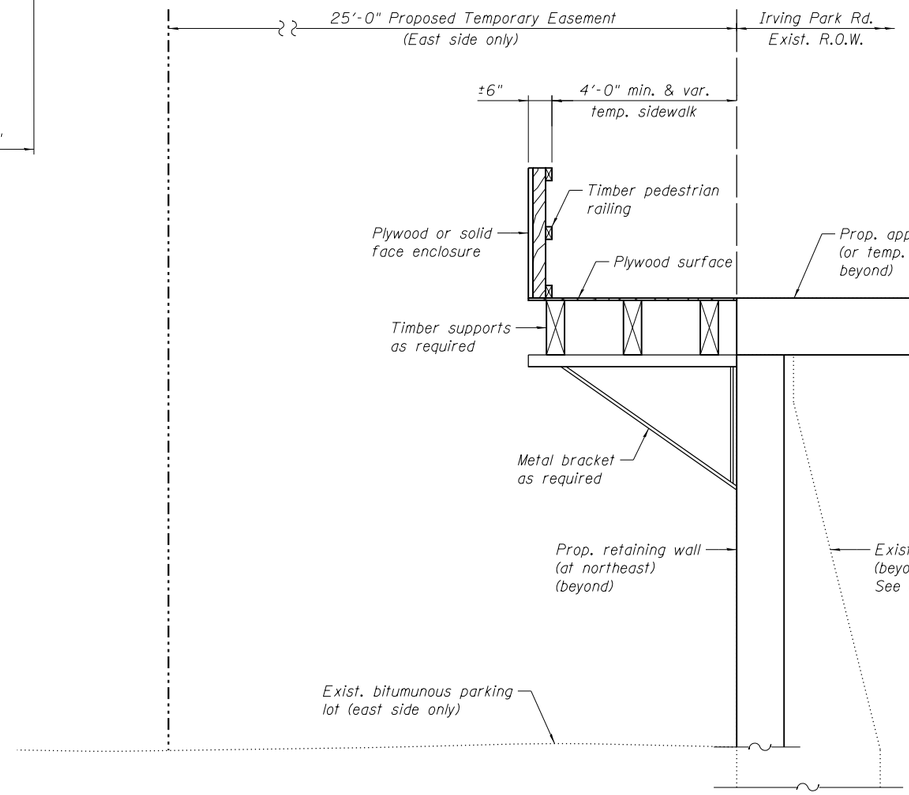

SECTION THRU APPROACH SLAB - STAGE II CONSTRUCTION

(Looking East)

DESIGN:	CA			
DRAWN:	LAM			
CHECKED:	DF			
APPROVED:	DF			
DATE:	11/29/2017			
SCALE:				
FILE:	NO.	BY	DATE	DESCRIPTION
	REVISIONS			

KEY PLAN:

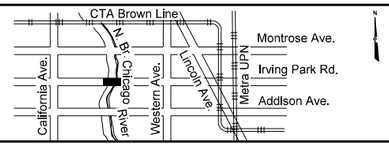

CDOT
CHICAGO DEPARTMENT OF TRANSPORTATION

BOWMAN, BARRETT & ASSOCIATES INC.
CONSULTING ENGINEERS
Chicago, Illinois
312.228.0100
www.bbandainc.com

W. IRVING PARK ROAD AT NORTH BRANCH CHICAGO RIVER

TEMPORARY SIDEWALK SUPPORT SYSTEM
STRUCTURE NO. 016-6090

PROJECT NO.	E-5-038
DRAWING NO.	S-26
CONTRACT NO.	XXXXX

...\0166090-E5038-024-TS.dgn
11/29/2017 1:46:56 PM

TOTAL SHEETS	SHEET NO.
184	127

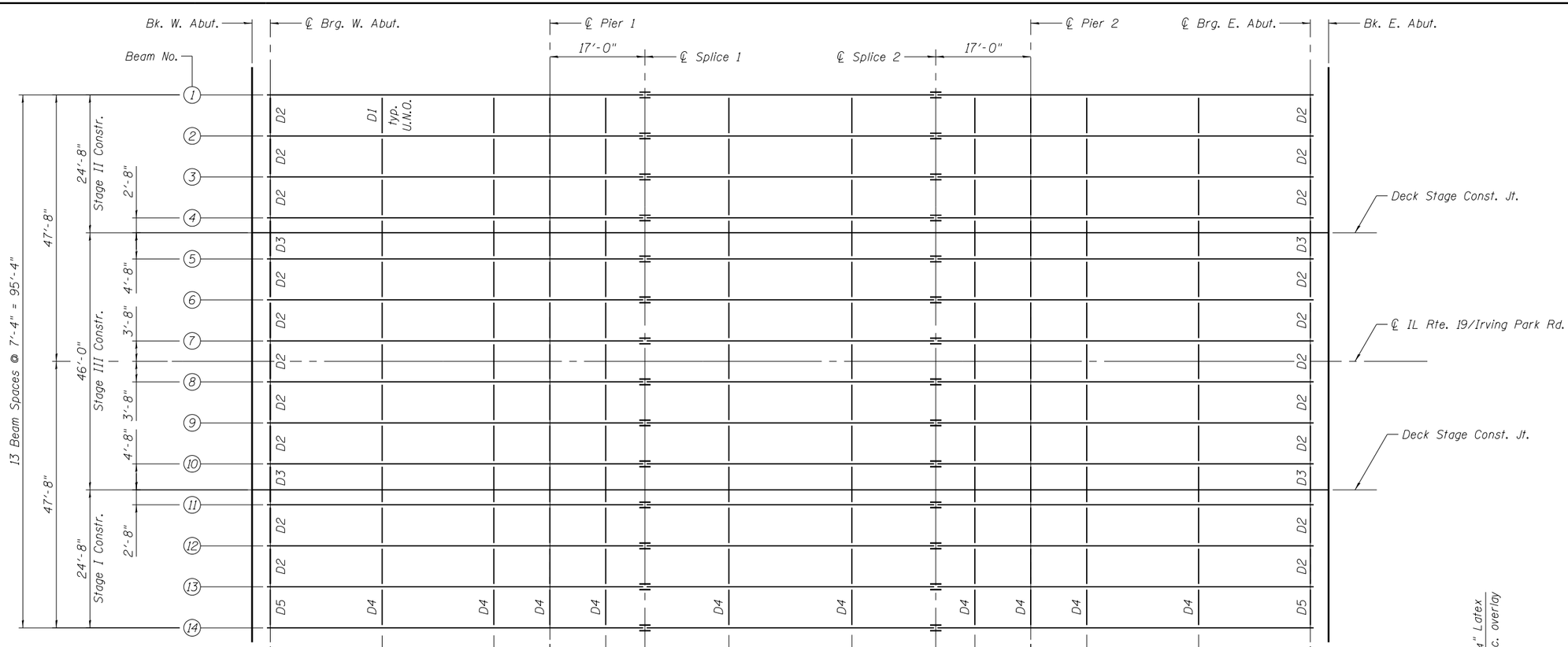

FRAMING PLAN

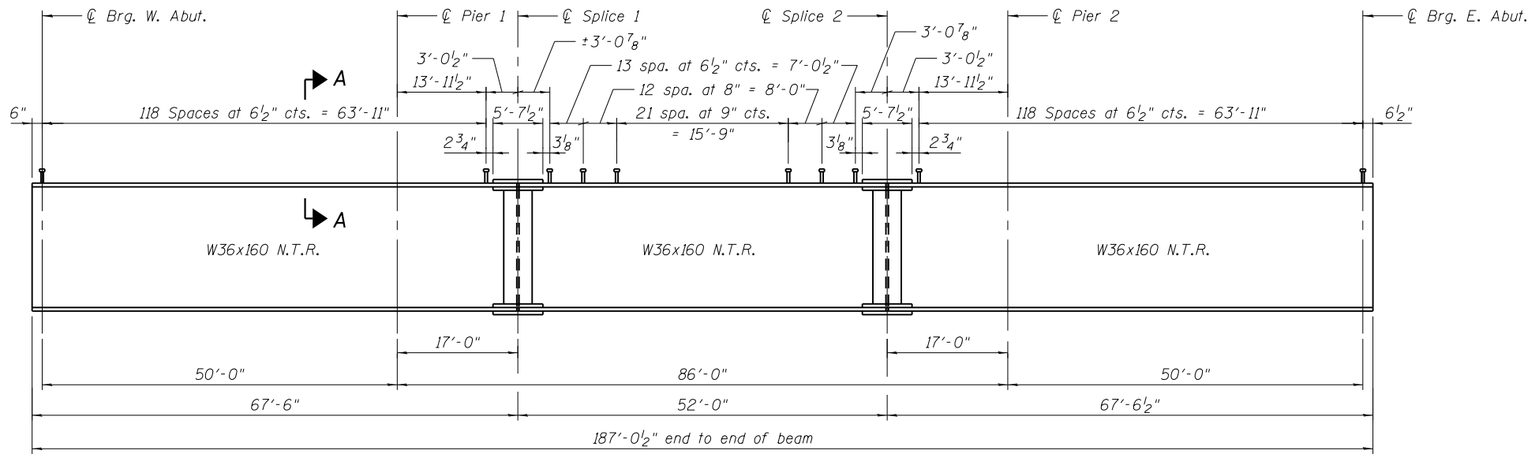

BEAM ELEVATION

N.T.R. = Notch Toughness Requirements

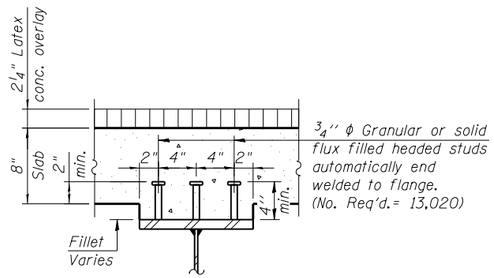

SECTION A-A

Note:
Load carrying components designated "NTR" shall conform to the Impact Testing Requirement, Zone 2.

...\0166090-E5038-025-FP.dgn
11/29/2017 1:46:58 PM

DESIGN:	CA			
DRAWN:	LAM			
CHECKED:	DF			
APPROVED:	DF			
DATE:	11/29/2017			
SCALE:				
FILE:	NO.	BY	DATE	DESCRIPTION
	REVISIONS			

KEY PLAN:

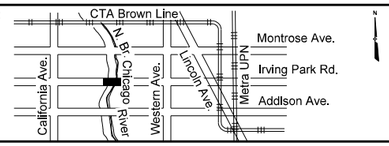

CDOT
CHICAGO DEPARTMENT OF TRANSPORTATION

BOWMAN, BARRETT & ASSOCIATES INC.
CONSULTING ENGINEERS
Chicago, Illinois
312.228.0100
www.bbandainc.com

W. IRVING PARK ROAD AT NORTH BRANCH CHICAGO RIVER

FRAMING PLAN
STRUCTURE NO. 016-6090

PROJECT NO. E-5-038
DRAWING NO. S-27
CONTRACT NO. XXXXX

TOTAL SHEETS	SHEET NO.
184	128

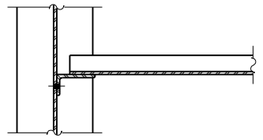

SECTION A-A

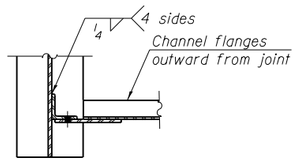

SECTION B-B

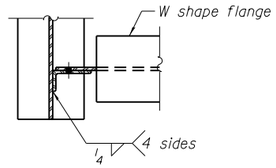

SECTION D-D

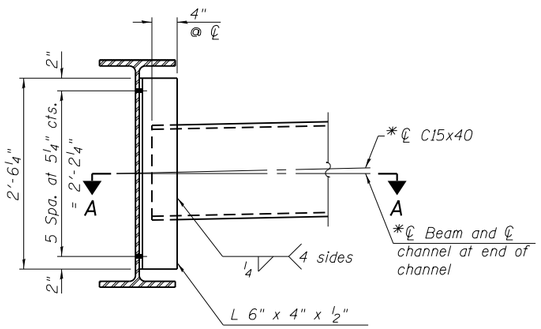

INTERIOR DIAPHRAGM - D1

(120 Required)

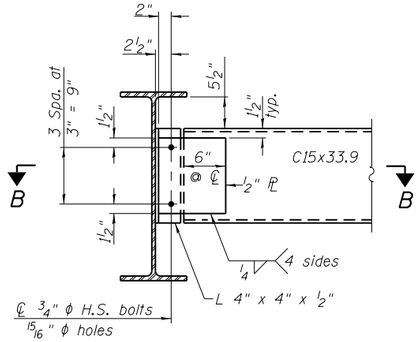

END DIAPHRAGM - D2

(20 Required)

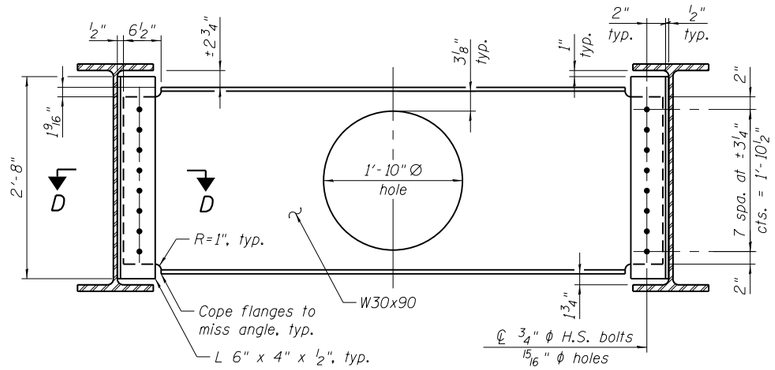

INTERIOR DIAPHRAGM - D4

(10 Required)

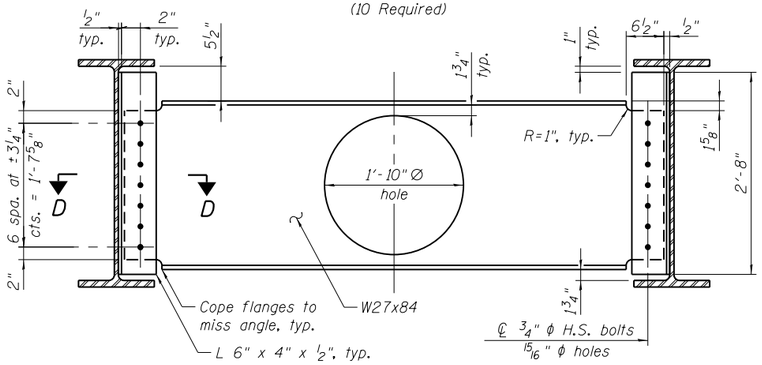

END DIAPHRAGM - D5

(2 Required)

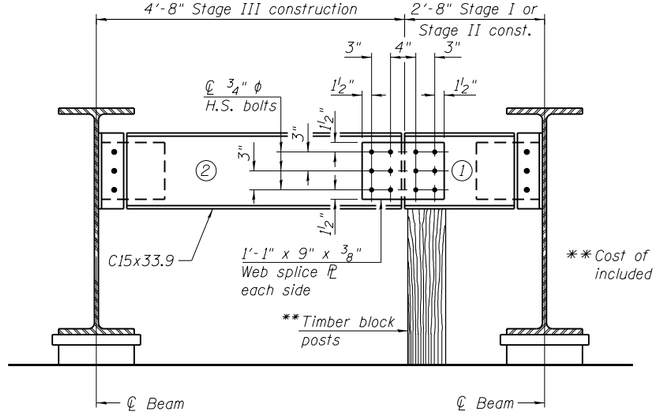

** Cost of Timber Block Posts is included with Structural Steel.

END DIAPHRAGM - D3

(4 Required)

END DIAPHRAGM STAGE CONSTRUCTION SEQUENCE

1. Order diaphragm in two sections.
2. Attach section ① of diaphragm to beam 11 (Stage 1) or beam 4 (Stage II)
3. Place timber block posts between section ① of diaphragm and abutment bearing section.
4. Attach section ② of diaphragm to both beam 10 (or beam 5) and section ① of diaphragm during stage III construction with splice plates.
5. Remove timber block posts.

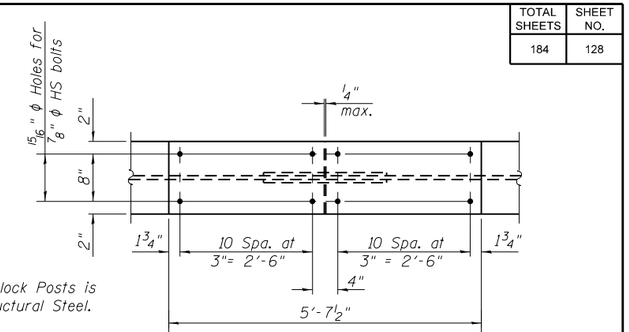

PLAN

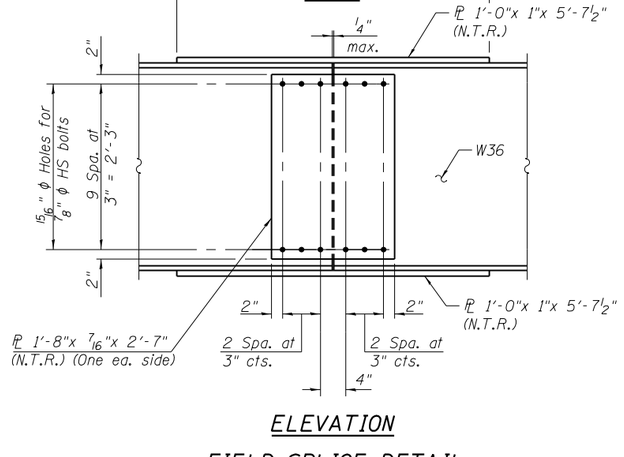

ELEVATION

FIELD SPLICE DETAIL

(28 Required)

Note:
Load carrying components designated "N.T.R." shall conform to the requirements for Notch Toughness, Zone 2.

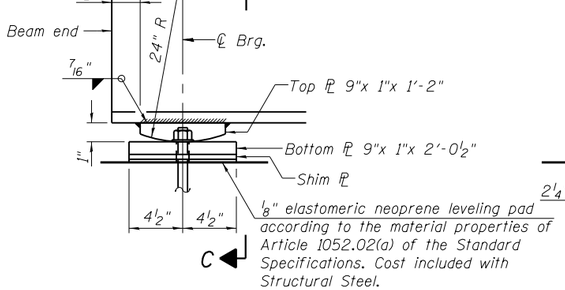

ELEVATION AT W. ABUT.

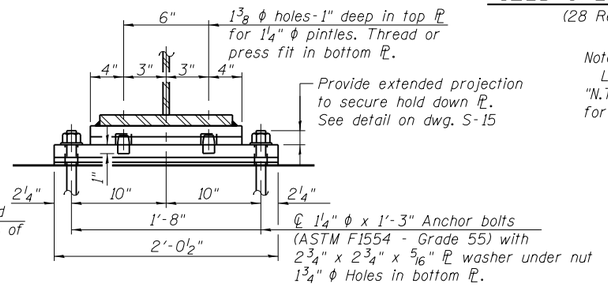

SECTION C-C

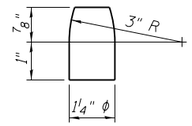

PINTLE

Notes:
Two hardened washers required for each set of oversized holes.
* Alternate channels (C15x50) are permitted to facilitate material acquisition. Calculated weight of structural steel is based on the lighter section.
The alternate, if utilized, shall be provided at no additional cost to the Contract.
All cross frames or diaphragms shall be installed as steel is erected and secured with erection pins and bolts except as otherwise noted. Individual cross frames or diaphragms at supports may be temporarily disconnected to install bearing anchor rods.

FIXED BEARING AT W. ABUT.

(14 Required)

BILL OF MATERIAL

Item	Unit	Total
Anchor Bolts, 1 1/4"	Each	28

Notes cont'd:
Two 1/8 in. adjusting shims shall be provided for each bearing in addition to all other plates or shims and placed as shown on bearing details.
Anchor bolts shall be ASTM F1554 all-thread (or a CDOT-approved alternate material) of the grade(s) and diameter(s) specified. The corresponding specified grade of AASHTO M314 anchor bolts may be used in lieu of ASTM F1554.
Anchor bolts at fixed bearings may be either cast in place or installed in holes drilled after the supported member is in place.
Drilled and set anchor bolts shall be installed according to Article 521.06 of the Standard Specifications.
Cost of the fixed bearing assemblies, shim plates, and fill plates shall be included with furnishing and erecting structural steel.
The structural steel plates of the bearing assembly shall conform to the requirements of AASHTO M270 Grade 50.

...\0166090-E5038-026-FD.dgn
4/27/2018 3:12:07 PM

DESIGN:	CA			
DRAWN:	LAM			
CHECKED:	DF			
APPROVED:	DF			
DATE:	11/29/2017			
SCALE:				
FILE:	NO.	BY	DATE	DESCRIPTION
	REVISIONS			

KEY PLAN:

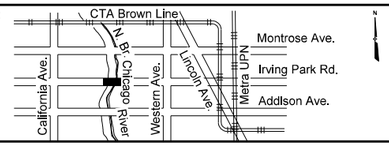

CDOT
CHICAGO DEPARTMENT OF TRANSPORTATION

BOWMAN, BARRETT & ASSOCIATES INC.
CONSULTING ENGINEERS
Chicago, Illinois
312.228.0100
www.bbandainc.com

W. IRVING PARK ROAD AT NORTH BRANCH CHICAGO RIVER

FRAMING DETAILS
STRUCTURE NO. 016-6090

PROJECT NO. E-5-038
DRAWING NO. S-28
CONTRACT NO. XXXXX

TOTAL SHEETS	SHEET NO.
184	129

I_s, S_s: Non-composite moment of inertia and section modulus of the steel section used for computing f_s (Total-Strength I, and Service II) due to non-composite dead loads (in.^{4} and in.^{3}).

$I_c(n)$, $S_c(n)$: Composite moment of inertia and section modulus of the steel and deck based upon the modular ratio, "n", used for computing f_s (Total-Strength I, and Service II) in uncracked sections due to short-term composite live loads (in.^{4} and in.^{3}).

$I_c(3n)$, $S_c(3n)$: Composite moment of inertia and section modulus of the steel and deck based upon 3 times the modular ratio, "3n", used for computing f_s (Total-Strength I, and Service II) in uncracked sections, due to long-term composite (superimposed) dead loads (in.^{4} and in.^{3}).

$I_c(cr)$, $S_c(cr)$: Composite moment of inertia and section modulus of the steel and longitudinal deck reinforcement, used for computing f_s (Total-Strength I and Service II) in cracked sections, due to both short-term composite live loads and long-term composite (superimposed) dead loads (in.^{4} and in.^{3}).

DC1: Un-factored non-composite dead load (kips/ft.).

M_{DC1}: Un-factored moment due to non-composite dead load (kip-ft.).

DC2: Un-factored long-term composite (superimposed excluding future wearing surface) dead load (kips/ft.).

M_{DC2}: Un-factored moment due to long-term composite (superimposed excluding future wearing surface) dead load (kip-ft.).

DW: Un-factored long-term composite (superimposed future wearing surface only) dead load (kips/ft.).

M_{DW}: Un-factored moment due to long-term composite (superimposed future wearing surface only) dead load (kip-ft.).

M_{L+IM}: Un-factored live load moment plus dynamic load allowance (impact) (kip-ft.).

M_u (Strength I): Factored design moment (kip-ft.).
$1.25\ (M_{DC1} + M_{DC2}) + 1.5\ M_{DW} + 1.75\ M_{L+IM}$

$\phi_f M_n$: Compact composite positive moment capacity computed according to Article 6.10.7.1 or non-slender negative moment capacity according to Article A6.1.1 or A6.1.2 (kip-ft).

f_s DC1: Un-factored stress at edge of flange for controlling steel flange due to vertical non-composite dead loads as calculated below (ksi).
M_{DC1} / S_{nc}

f_s DC2: Un-factored stress at edge of flange for controlling steel flange due to vertical composite dead loads as calculated below (ksi).
$M_{DC2} / S_c(3n)$ or $M_{DC2} / S_c(cr)$ as applicable.

f_s DW: Un-factored stress at edge of flange for controlling steel flange due to vertical composite future wearing surface loads as calculated below (ksi).
$M_{DW} / S_c(3n)$ or $M_{DW} / S_c(cr)$ as applicable.

f_s (L+IM): Un-factored stress at edge of flange for controlling steel flange due to vertical composite live load plus impact loads as calculated below (ksi).
$M_{L+IM} / S_c(n)$ or $M_{DW} / S_c(cr)$ as applicable.

f_s (Service II): Sum of stresses as computed below (ksi).
$f_{sDC1} + f_{sDC2} + f_{sDW} + 1.3\ f_s(L+IM)$

$0.95R_hF_yf$: Composite stress capacity for Service II loading according to Article 6.10.4.2 (ksi).

f (Total)(Strength I): Sum of stresses as computed below on non-compact section (ksi).
$1.25\ (f_{sDC1} + f_{sDC2}) + 1.5\ f_{sDW} + 1.75\ f_s(L+IM)$

$\phi_f F_n$: Non-Compact composite positive or negative stress capacity for Strength I loading according to Article 6.10.7 or 6.10.8 (ksi).

V_f: Maximum factored shear range in span computed according to Article 6.10.10.

Note:
M_{L+IM} and R_{L+IM} include the effects of centrifugal force and superelevation.

DW includes the weight of 2 1/4" concrete topping.

INTERIOR BEAM MOMENT TABLE				
		0.4 Sp. 1 or 0.6 Sp. 3	0.5 Sp. 2	Pier 1 or 2
I_s	(in^4)	9760	9760	9760
$I_c(n)$	(in^4)	26067	26067	26067
$I_c(3n)$	(in^4)	19387	19387	19387
$I_c(CR)$	(in^4)	-	-	13017
S_s	(in^3)	542	542	542
$S_c(n)$	(in^3)	791	791	791
$S_c(3n)$	(in^3)	719	719	719
$S_c(CR)$	(in^3)	-	-	618
DC1	(k/')	0.949	0.949	0.949
M_{DC1}	('k)	85	378	-499
DC2	(k/')	0.173	0.173	0.173
M_{DC2}	('k)	15	68	-92
DW	(k/')	0.444	0.444	0.444
M_{DW}	('k)	39	175	-236
LLDF		0.670	0.609	0.634
M_{L+IM}	('k)	579	793	-742
M_u (Strength I)	('k)	1196.8	2207.8	-2391.3
$\phi_f M_n$	('k)	4156.1	3958	-3189.1
f_s DC1	(ksi)	1.88	8.37	-11.05
f_s DC2	(ksi)	0.25	1.13	-1.79
f_s DW	(ksi)	0.65	2.92	-4.58
f_s (L+IM)	(ksi)	8.78	12.03	-14.41
f_s (Service II)	(ksi)	14.20	28.06	-36.15
$0.95R_hF_{yf}$	(ksi)	47.5	47.5	47.5
f_s (Total)(Strength I)	(ksi)	-	-	-
$\phi_f F_n$	(ksi)	-	-	-
V_f	(k)	49.4	56.4	-

BEAM REACTION TABLE					
		Abut.		Pier	
		Interior	Exterior	Interior	Exterior
LLDF		0.767	0.767	0.767	0.767
OCF		-	1.0	-	1.0
R_{DC1}	(k)	14.6	14.3	74.5	74.5
R_{DC2}	(k)	2.5	2.5	13.6	13.6
R_{DW}	(k)	6.4	6.4	34.9	34.9
R_{L+IM}	(k)	54.6	54.6	94.2	94.2
R_{IM}	(k)	14.2	14.2	17.9	17.9
R_{Total}	(k)	92.3	92.3	235.1	235.1

TOP OF BEAM ELEVATIONS

(For fabrication use only)

Beam No.	℄ Brg. W. Abut.	℄ Pier 1	℄ Splice 1	℄ Splice 2	℄ Pier 2	℄ Brg. E. Abut.
1	20.49	21.44	21.76	21.70	21.35	20.30
2	20.49	21.44	21.76	21.71	21.35	20.30
3	20.60	21.55	21.87	21.81	21.46	20.41
4	20.71	21.66	21.98	21.92	21.57	20.52
5	20.82	21.77	22.09	22.03	21.68	20.63
6	20.93	21.88	22.20	22.14	21.79	20.74
7	21.04	21.99	22.31	22.25	21.90	20.85
8	21.04	21.99	22.31	22.25	21.90	20.85
9	20.93	21.88	22.20	22.14	21.79	20.74
10	20.82	21.77	22.09	22.03	21.68	20.63
11	20.71	21.66	21.98	21.92	21.57	20.52
12	20.60	21.55	21.87	21.81	21.46	20.41
13	20.49	21.44	21.76	21.71	21.35	20.30
14	20.49	21.44	21.76	21.70	21.35	20.30

...\0166090-E5038-027-BD.dgn
11/29/2017 1:47:03 PM

DESIGN: CA				
DRAWN: LAM				
CHECKED: DF				
APPROVED: DF				
DATE: 11/29/2017				
SCALE:				
FILE:	NO.	BY	DATE	DESCRIPTION
	REVISIONS			

KEY PLAN:

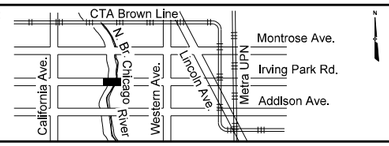

CDOT
CHICAGO DEPARTMENT OF TRANSPORTATION

BOWMAN, BARRETT & ASSOCIATES INC.
CONSULTING ENGINEERS
Chicago, Illinois
312.228.0100
www.bbandainc.com

W. IRVING PARK ROAD AT NORTH BRANCH CHICAGO RIVER

BEAM DETAILS
STRUCTURE NO. 016-6090

PROJECT NO.	E-5-038
DRAWING NO.	S-29
CONTRACT NO.	XXXXX

TOTAL SHEETS	SHEET NO.
184	130

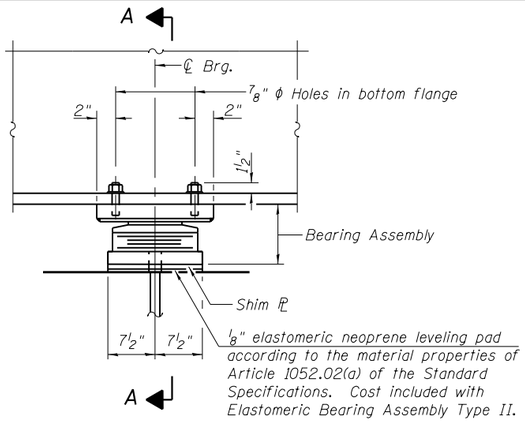

ELEVATION AT PIERS

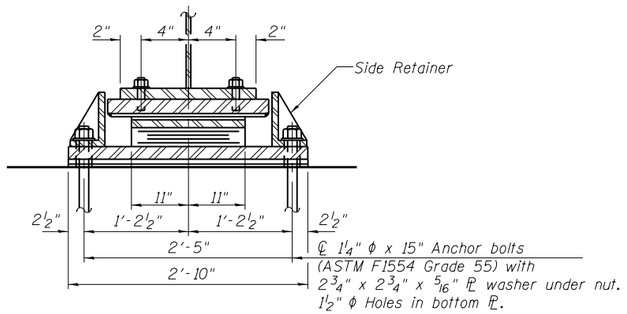

SECTION A-A

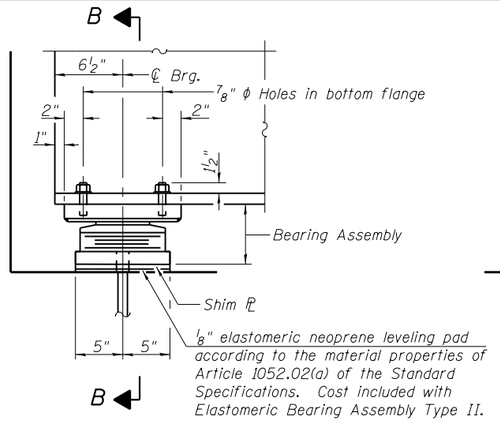

ELEVATION AT E. ABUT.

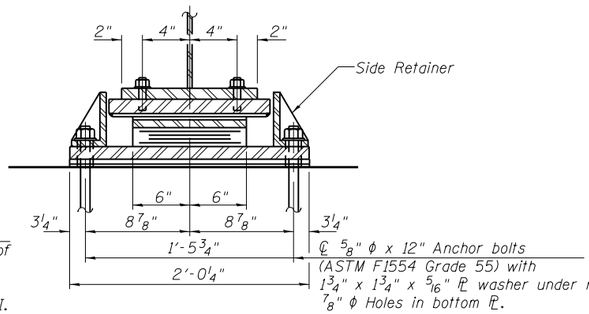

SECTION B-B

TYPE II ELASTOMERIC EXP. BRG. AT PIERS 1 AND 2

(28 Required)

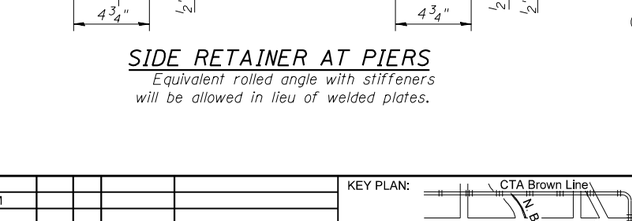

BEVELED TOP BEARING ASSEMBLY AT PIERS

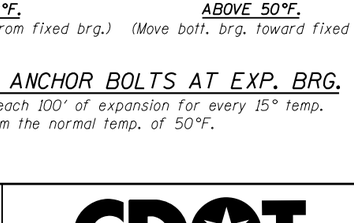

PLAN-PTFE SURFACE

TYPE II ELASTOMERIC EXP. BRG. AT E. ABUT.

(14 Required)

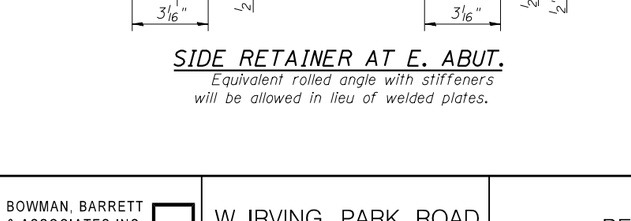

BEVELED TOP BEARING ASSEMBLY AT E. ABUT.

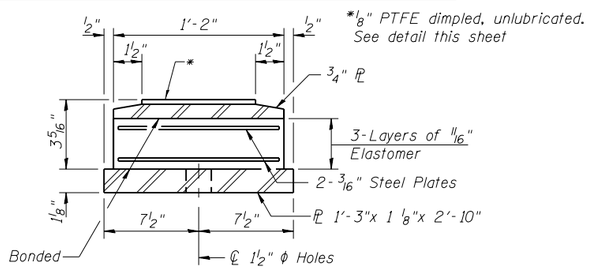

BEVELED TOP BEARING ASSEMBLY AT PIERS

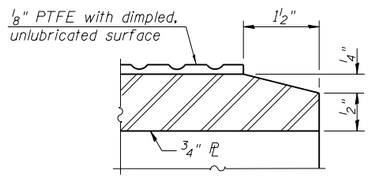

SECTION THRU PTFE

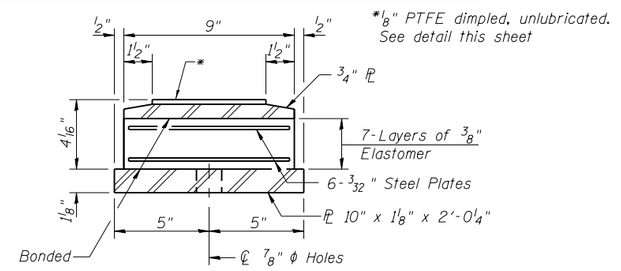

BEVELED TOP BEARING ASSEMBLY AT E. ABUT.

BOTTOM BEARING ASSEMBLY AT PIERS

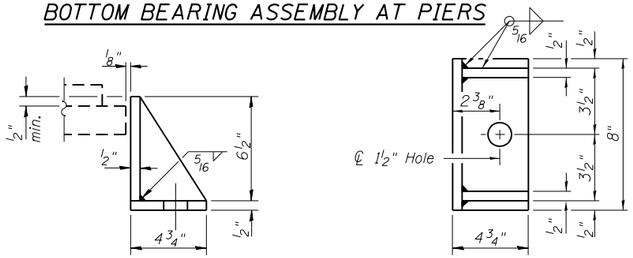

SIDE RETAINER AT PIERS

Equivalent rolled angle with stiffeners will be allowed in lieu of welded plates.

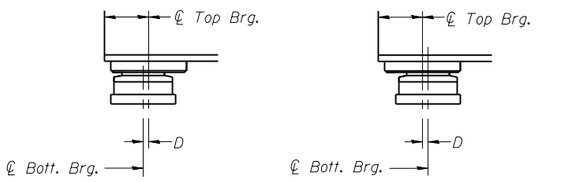

SETTING ANCHOR BOLTS AT EXP. BRG.

D=1/8" per each 100' of expansion for every 15° temp. change from the normal temp. of 50°F.

BOTTOM BEARING ASSEMBLY AT. E. ABUT.

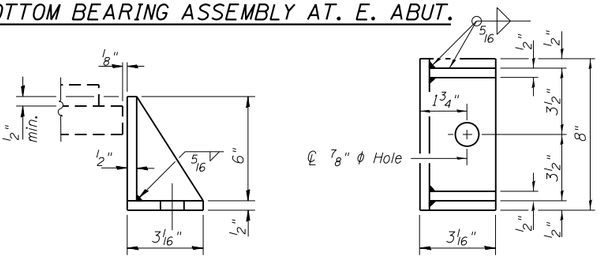

SIDE RETAINER AT E. ABUT.

Equivalent rolled angle with stiffeners will be allowed in lieu of welded plates.

Notes:

Anchor bolts shall be ASTM F1554 all-thread (or an Engineer-approved alternate material) of the grade(s) and diameter(s) specified. The corresponding specified grade of AASHTO M314 anchor bolts may be used in lieu of ASTM F1554.

Anchor bolts for Type II bearings shall be placed in holes drilled in the concrete through holes in the bottom bearing plate after members are in place. Side retainers shall be placed after bolts are installed.

Drilled and set anchor bolts shall be installed according to Article 521.06 of the Standard Specifications.

Side retainers, shim PL, and other steel members required for the elastomeric bearing assembly shall be included in the cost of Elastomeric Bearing Assembly, Type II.

The 1/8" PTFE sheet shall be bonded directly to the top steel plate with a two-component, medium viscosity epoxy resin, conforming to the requirements of the Federal Specification MMM-A-134, Type I. The bond agent shall be applied on the full area of the contact surfaces.

Bonding of 1/8" PTFE sheet during vulcanizing process will be permitted provided the process and method of adjusting assembly height is approved by the Engineer.

The structural steel plates of the bearing assemblies shall conform to the requirements of AASHTO M270 Grade 50.

Two 1/8 in. adjusting shims shall be provided for each bearing in addition to all other plates or shims and placed as shown on bearing details.

BILL OF MATERIAL

Item	Unit	Total
Elastomeric Bearing Assembly, Type II	Each	42
Anchor Bolts, 5/8" ϕ	Each	28
Anchor Bolts, 1 1/4" ϕ	Each	56

...\0166090-E5038-028-BRG.dgn
11/29/2017 1:47:05 PM

DESIGN:	CA			
DRAWN:	LAM			
CHECKED:	DF			
APPROVED:	DF			
DATE:	11/29/2017			
SCALE:				
FILE:	NO.	BY	DATE	DESCRIPTION
	REVISIONS			

KEY PLAN:

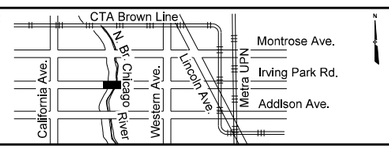

CDOT
CHICAGO DEPARTMENT OF TRANSPORTATION

BOWMAN, BARRETT & ASSOCIATES INC.
CONSULTING ENGINEERS
Chicago, Illinois
312.228.0100
www.bbandainc.com

W. IRVING PARK ROAD AT NORTH BRANCH CHICAGO RIVER

BEARING DETAILS
STRUCTURE NO. 016-6090

PROJECT NO. E-5-038
DRAWING NO. S-30
CONTRACT NO. XXXXX

TOTAL SHEETS	SHEET NO.
184	131

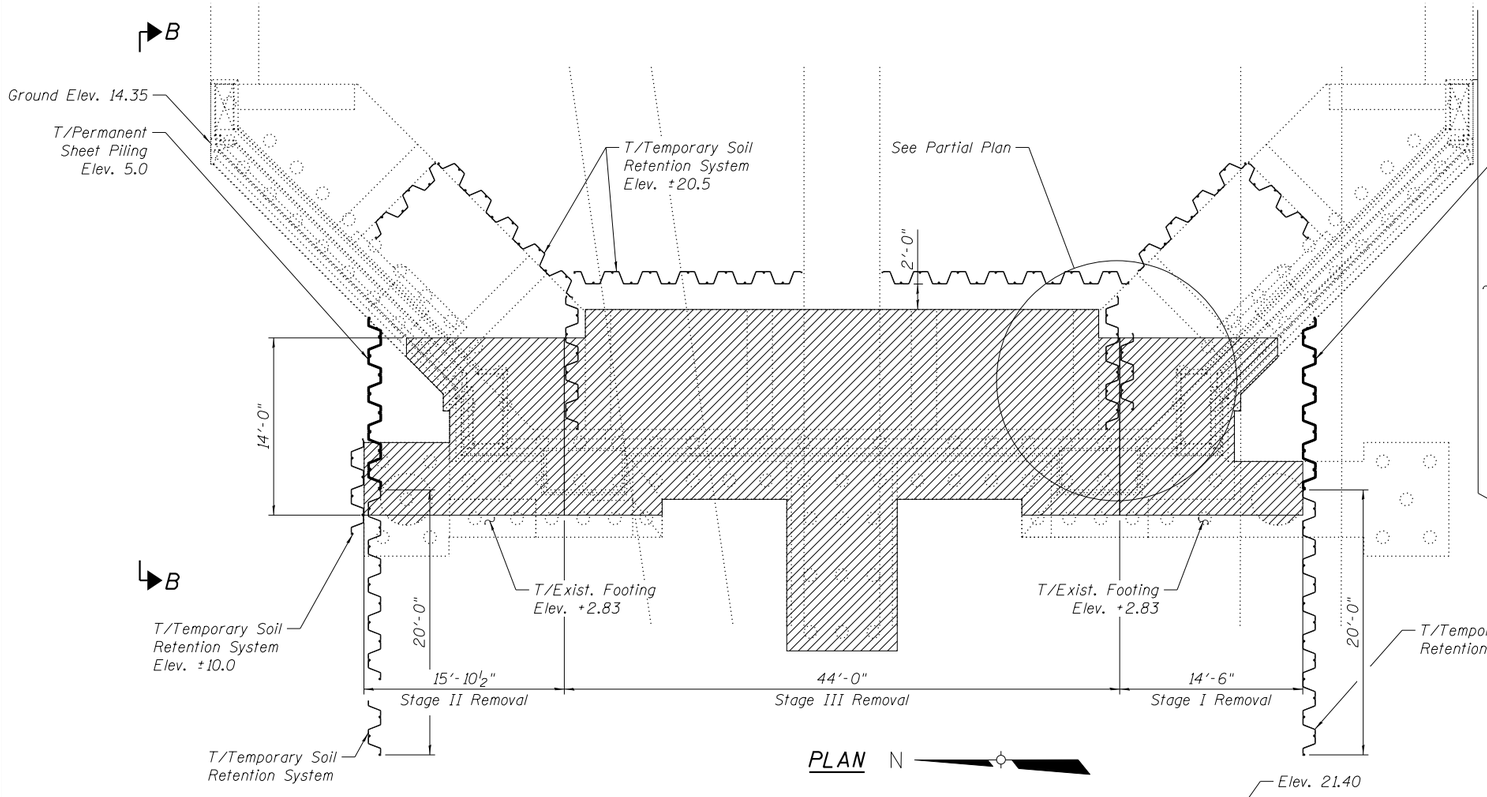

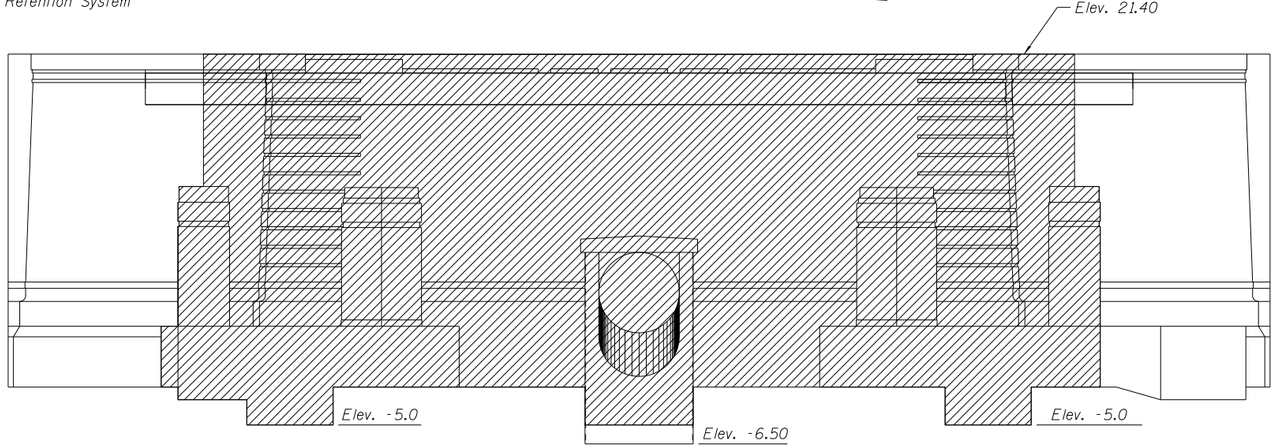

ELEVATION
(Looking East)

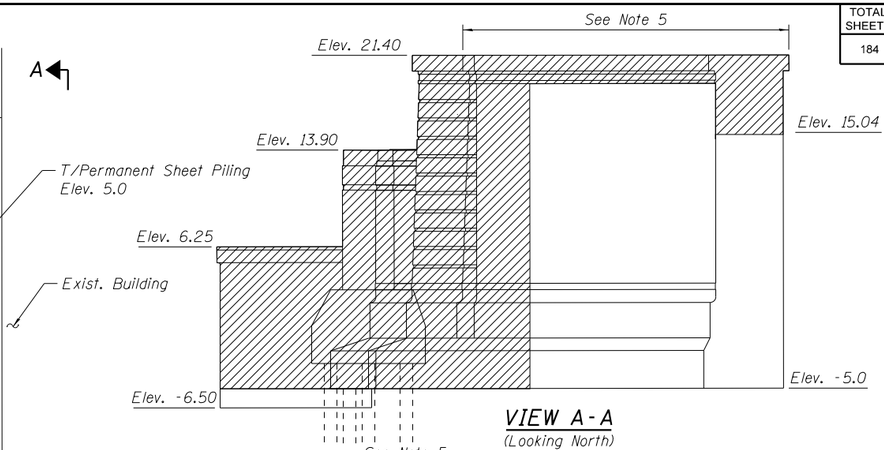

VIEW A-A
(Looking North)

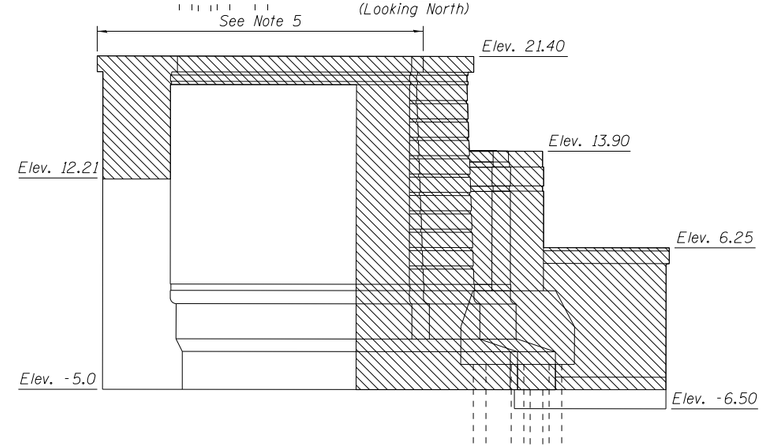

VIEW B-B
(Looking South)

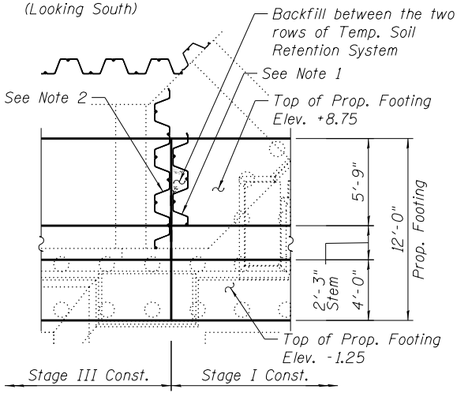

PARTIAL PLAN
N

NOTES

1. Temp. Soil Retention System over the heel of the new abutment to be installed before backfilling over the heel of the abutment.
2. Part of the Temp. Soil Retention System installed over the heel of the existing abutment shall be removed in Stage III Construction.
3. The Contractor shall submit a Temporary Soil Retention System design including plan details and calculations for review and acceptance by the Commissioner. In addition, Temporary Soil Retention System computations and plans shall be submitted to the Office of Underground Coordination (OUC) for review and approval. Temporary Soil Retention System for abutment removal shall not be paid for separately, but shall be included in the cost of Braced Excavation.
4. Exist. Abutment shown hatched, shall be removed in it's entirety. The rest of the exist. abutment to remain to serve as temporary soil retention to facilitate new construction.
5. Portion of exist. abut. are incorporated into the Braced Excavation Plan. After the new construction is complete, remove top portion of existing structure, 2 feet below prop. grade.
6. Concrete Removal is included with the cost of Removal of Exist. Structures.

LEGEND

Concrete Removal

DESIGN: SF				
DRAWN: MTR				
CHECKED:				
APPROVED: DF				
DATE: 11/29/2017				
SCALE:				
FILE:	NO.	BY	DATE	DESCRIPTION
	REVISIONS			

KEY PLAN:

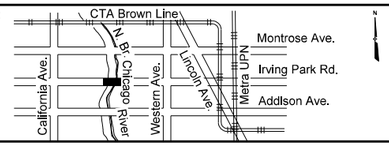

CDOT
CHICAGO DEPARTMENT OF TRANSPORTATION

BOWMAN, BARRETT & ASSOCIATES INC.
CONSULTING ENGINEERS
Chicago, Illinois
312.228.0100
www.bbandainc.com

W. IRVING PARK ROAD AT NORTH BRANCH CHICAGO RIVER

EAST ABUTMENT REMOVAL DETAILS
STRUCTURE NO. 016-6090

PROJECT NO.	E-5-038
DRAWING NO.	S-31
CONTRACT NO.	XXXXX

...\0166090-E5038-029-RD01.dgn
3:12:09 PM
4/27/2018

TOTAL SHEETS	SHEET NO.
184	132

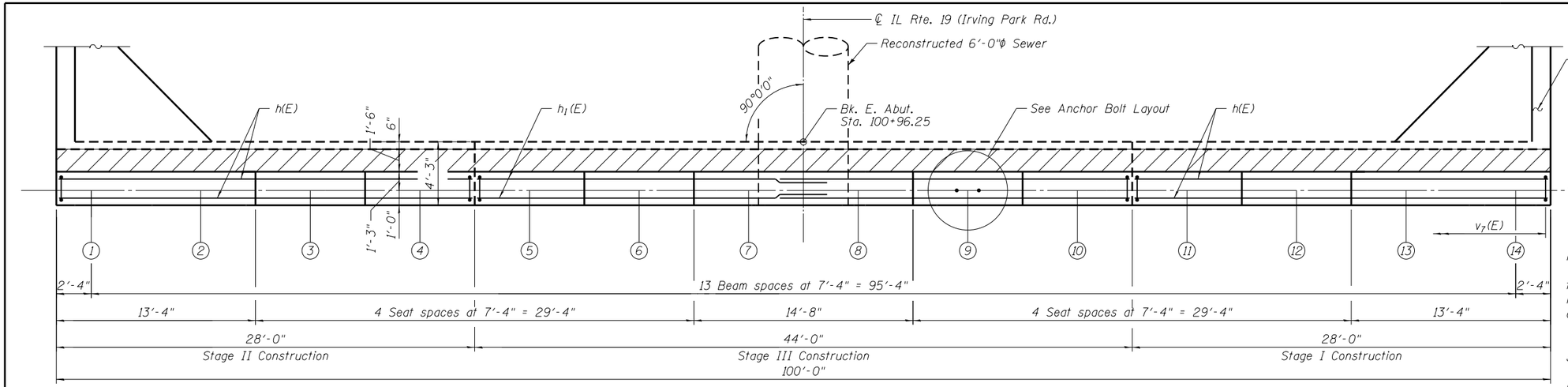

TOP PLAN

N

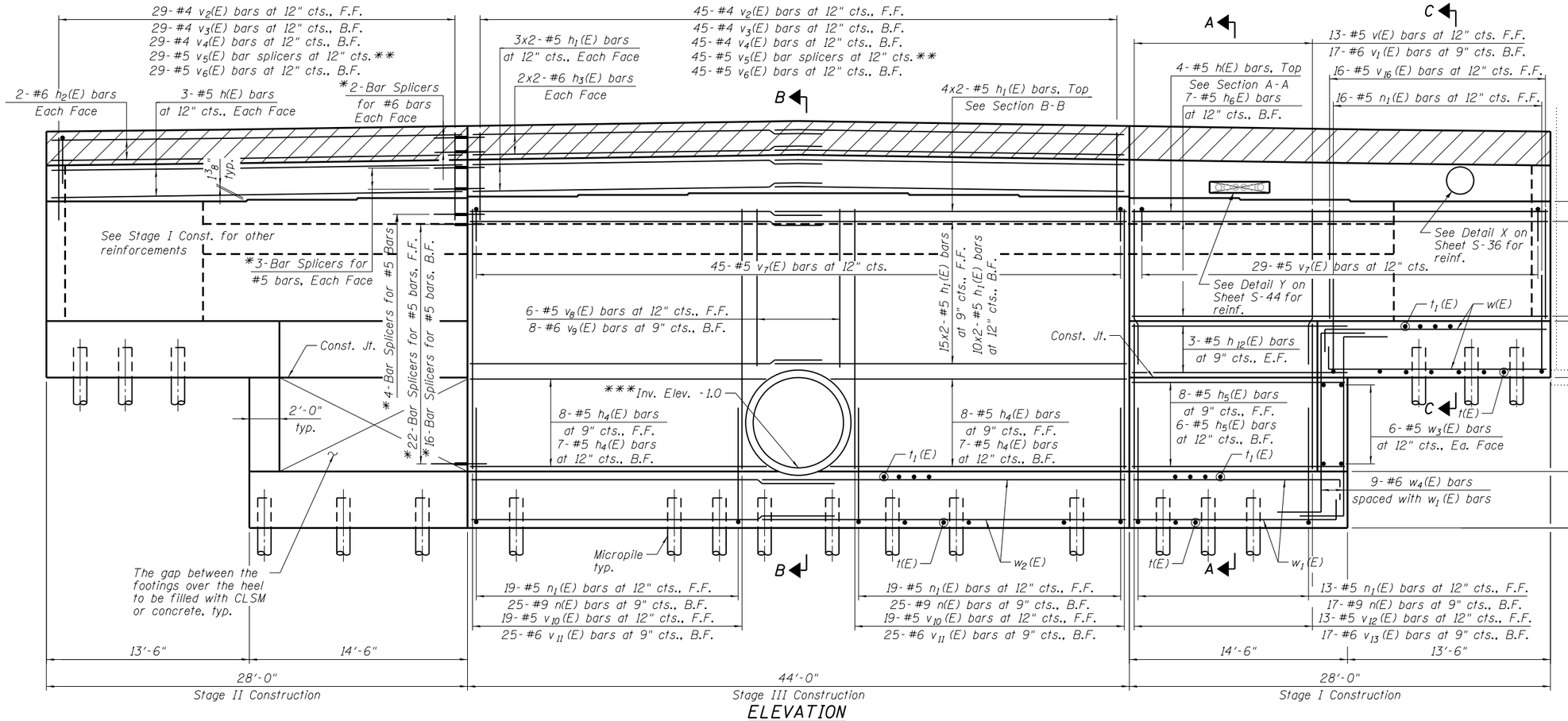

ELEVATION

(Looking East)

ANCHOR BOLT LAYOUT

(Typ. for Each Beam Location)

For Wingwall Details See Drawing No. S-35.

Notes:

Hatched area to be poured after superstructure false work has been removed. Quantity of concrete included with High Performance Concrete Superstructures on Drawing No. S-14.

For Section A-A, B-B & C-C, see Drawing No. S-37.

For Bar Bending Diagram and Bill of Material see Drawing No. S-38.

Bars indicated thus 2x2-#6 etc. indicates 2 lines of bars with 2 lengths per line.

F.F. denotes Front Face

B.F. denotes Back Face

*Typ. for Stage I and II Const.

**See Bar Splicer Assembly Details on Drawing No. S-57.

***Contractor shall verify the invert of the existing sewer at the face of abutment in the field. The contractor shall make adjustments to the proposed footing and invert of the proposed sewer as necessary, subject to the approval of the Engineer.

BEARING SEAT ELEVATIONS

Beam	Brg. Seat Elevation
1	16.70
2	16.70
3	16.80
4	16.91
5	17.02
6	17.13
7	17.24
8	17.24
9	17.13
10	17.02
11	16.91
12	16.80
13	16.70
14	16.70

DESIGN:	SF			
DRAWN:	MTR			
CHECKED:	DF			
APPROVED:	DF			
DATE:	11/29/2017			
SCALE:				
FILE:	NO.	BY	DATE	DESCRIPTION
	REVISIONS			

KEY PLAN:

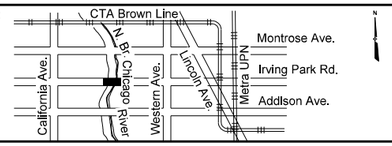

CDOT
CHICAGO DEPARTMENT OF TRANSPORTATION

BOWMAN, BARRETT & ASSOCIATES INC.
CONSULTING ENGINEERS
Chicago, Illinois
312.228.0100
www.bbandainc.com

W. IRVING PARK ROAD AT NORTH BRANCH CHICAGO RIVER

EAST ABUTMENT PLAN AND ELEVATION STRUCTURE NO. 016–6090

PROJECT NO. E-5-038

DRAWING NO. S–32

CONTRACT NO. XXXXX

...\0166090-E5038-030-EA01.dgn

11/29/2017 1:47:10 PM

TOTAL SHEETS	SHEET NO.
184	133

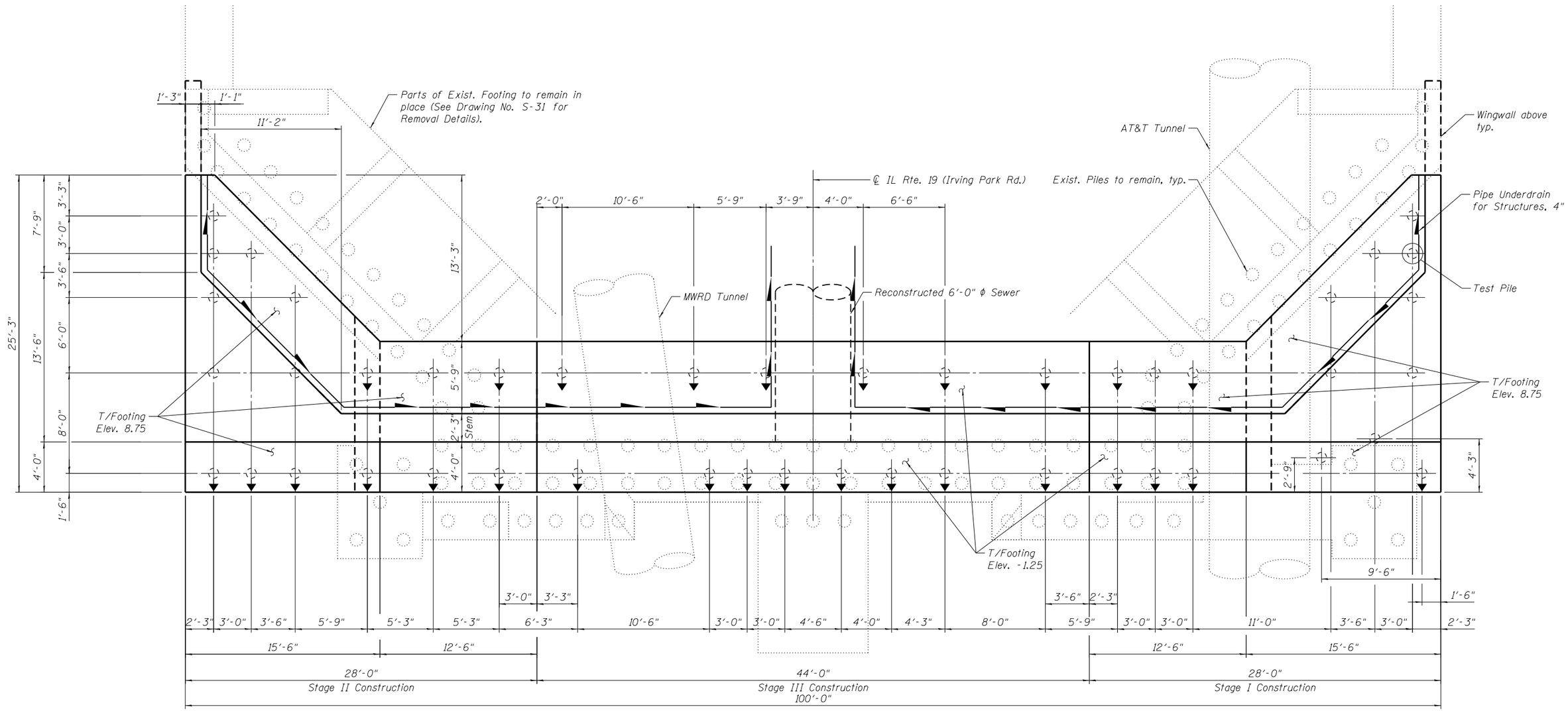

FOOTING PLAN
(Showing Micropiles)

N

LEGEND

- Indicates 4:12 Battered Micropile
- Indicates Vertical Micropile

Notes:

1. For Micropile Details see Drawing No. S-56

DESIGN: SF				
DRAWN: MTR				
CHECKED: DF				
APPROVED: DF				
DATE: 11/29/2017				
SCALE:				
FILE:	NO.	BY	DATE	DESCRIPTION
	REVISIONS			

KEY PLAN:

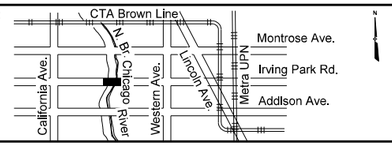

CDOT
CHICAGO DEPARTMENT OF TRANSPORTATION

BOWMAN, BARRETT & ASSOCIATES INC.
CONSULTING ENGINEERS
Chicago, Illinois
312.228.0100
www.bbandainc.com

W. IRVING PARK ROAD AT NORTH BRANCH CHICAGO RIVER

EAST ABUTMENT FOOTING PLAN I
STRUCTURE NO. 016-6090

PROJECT NO.	E-5-038
DRAWING NO.	S-33
CONTRACT NO.	XXXXX

...\0166090-E5038-031-EA02.dgn
11/29/2017 1:47:12 PM

TOTAL SHEETS	SHEET NO.
184	134

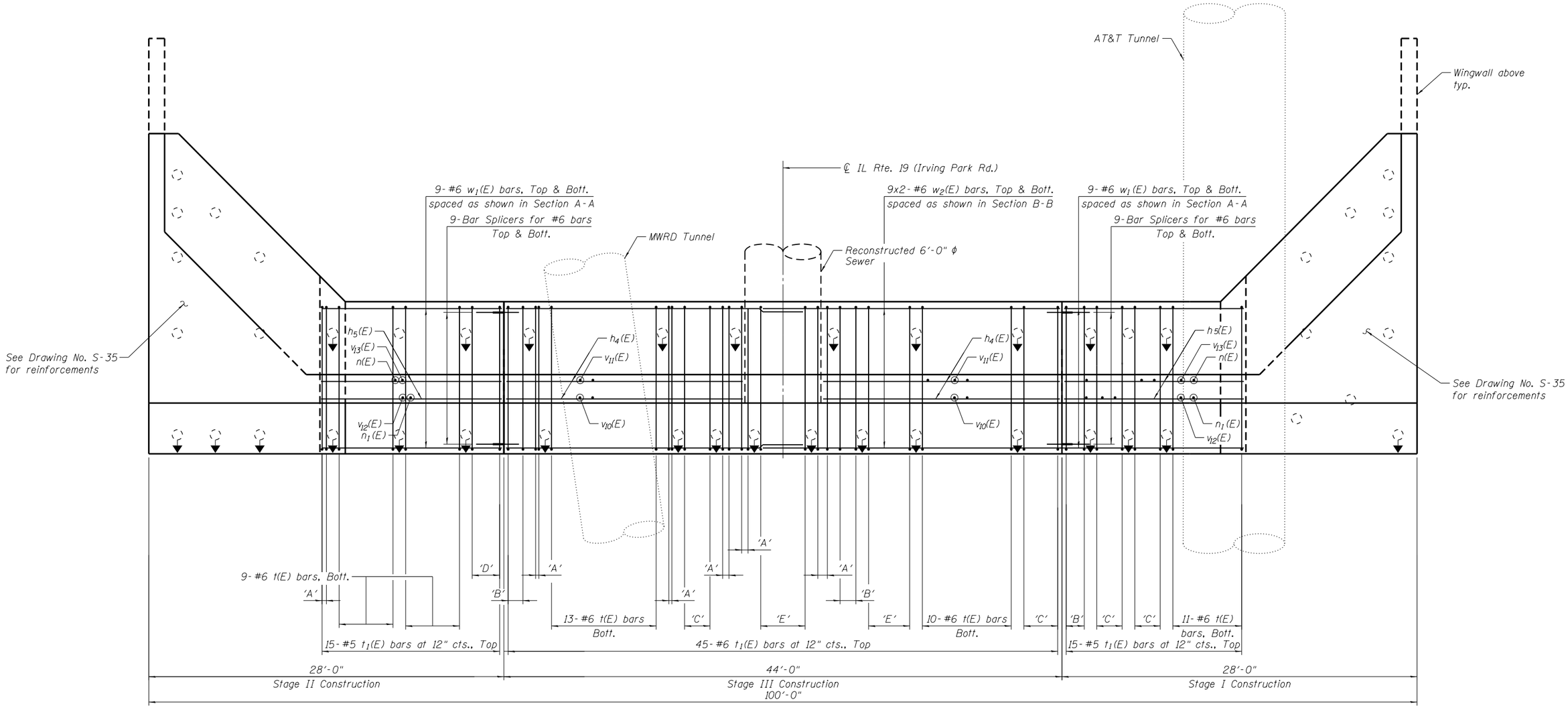

FOOTING PLAN
(Showing Reinforcements)

N

Notes:

1. 'A' - 2- #6 t(E) bars, Bott.
   'B' - 3- #6 t(E) bars, Bott.
   'C' - 4- #6 t(E) bars, Bott.
   'D' - 5- #6 t(E) bars, Bott.
   'E' - 6- #6 t(E) bars, Bott.

DESIGN: SF				
DRAWN: MTR				
CHECKED: DF				
APPROVED: DF				
DATE: 11/29/2017				
SCALE:				
FILE:	NO.	BY	DATE	DESCRIPTION
	REVISIONS			

KEY PLAN:

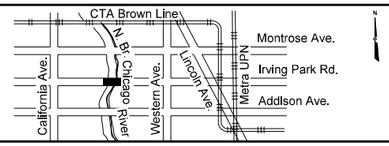

CDOT
CHICAGO DEPARTMENT OF TRANSPORTATION

BOWMAN, BARRETT & ASSOCIATES INC.
CONSULTING ENGINEERS
Chicago, Illinois
312.228.0100
www.bbandainc.com

W. IRVING PARK ROAD AT NORTH BRANCH CHICAGO RIVER

EAST ABUTMENT FOOTING PLAN II
STRUCTURE NO. 016-6090

PROJECT NO.	E-5-038
DRAWING NO.	S-34
CONTRACT NO.	XXXXX

...\0166090-E5038-032-EA03.dgn
11/29/2017 1:47:14 PM

TOTAL SHEETS	SHEET NO.
184	135

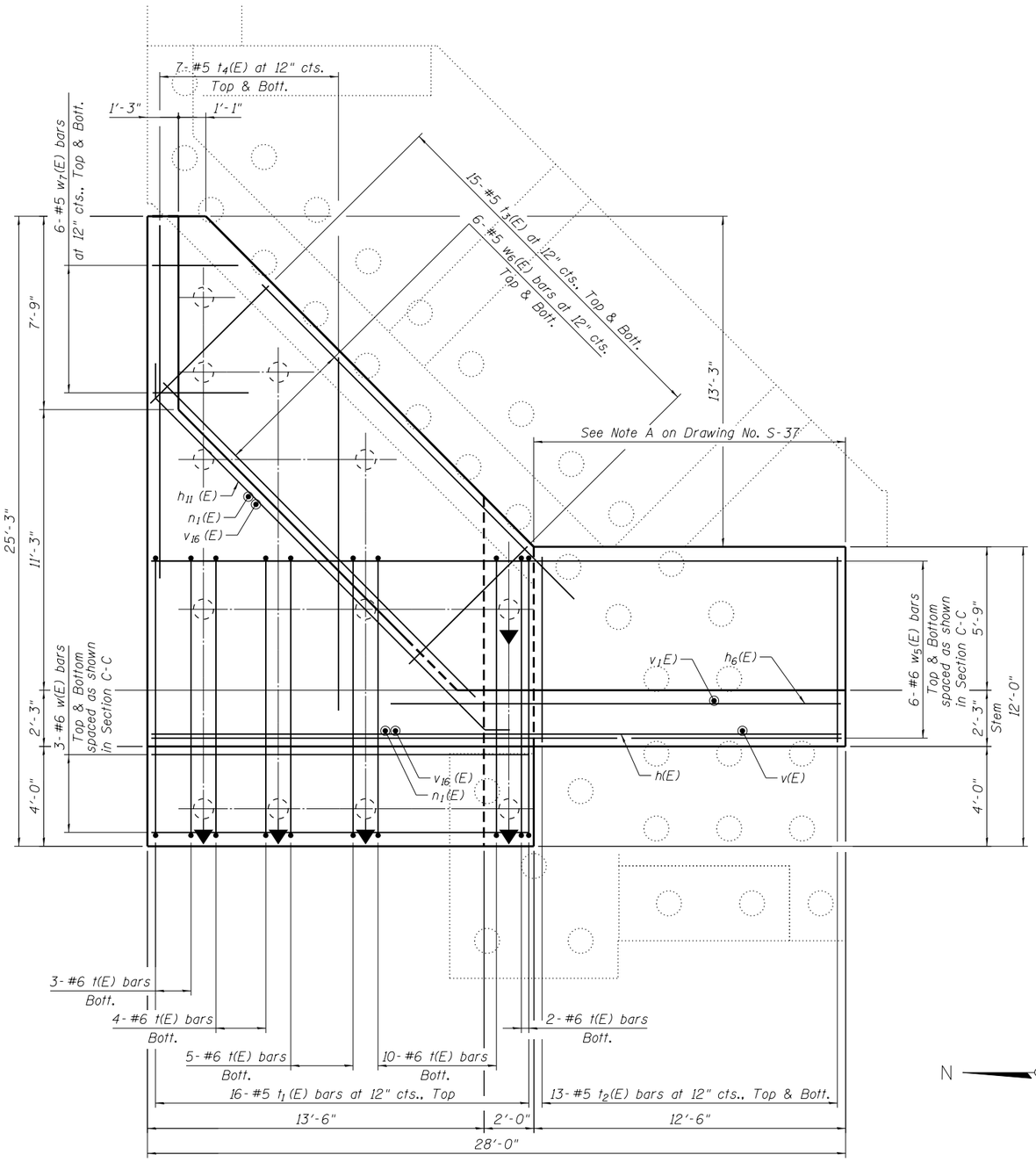

FOOTING PLAN AT ELEV. 8.75

Stage II Construction

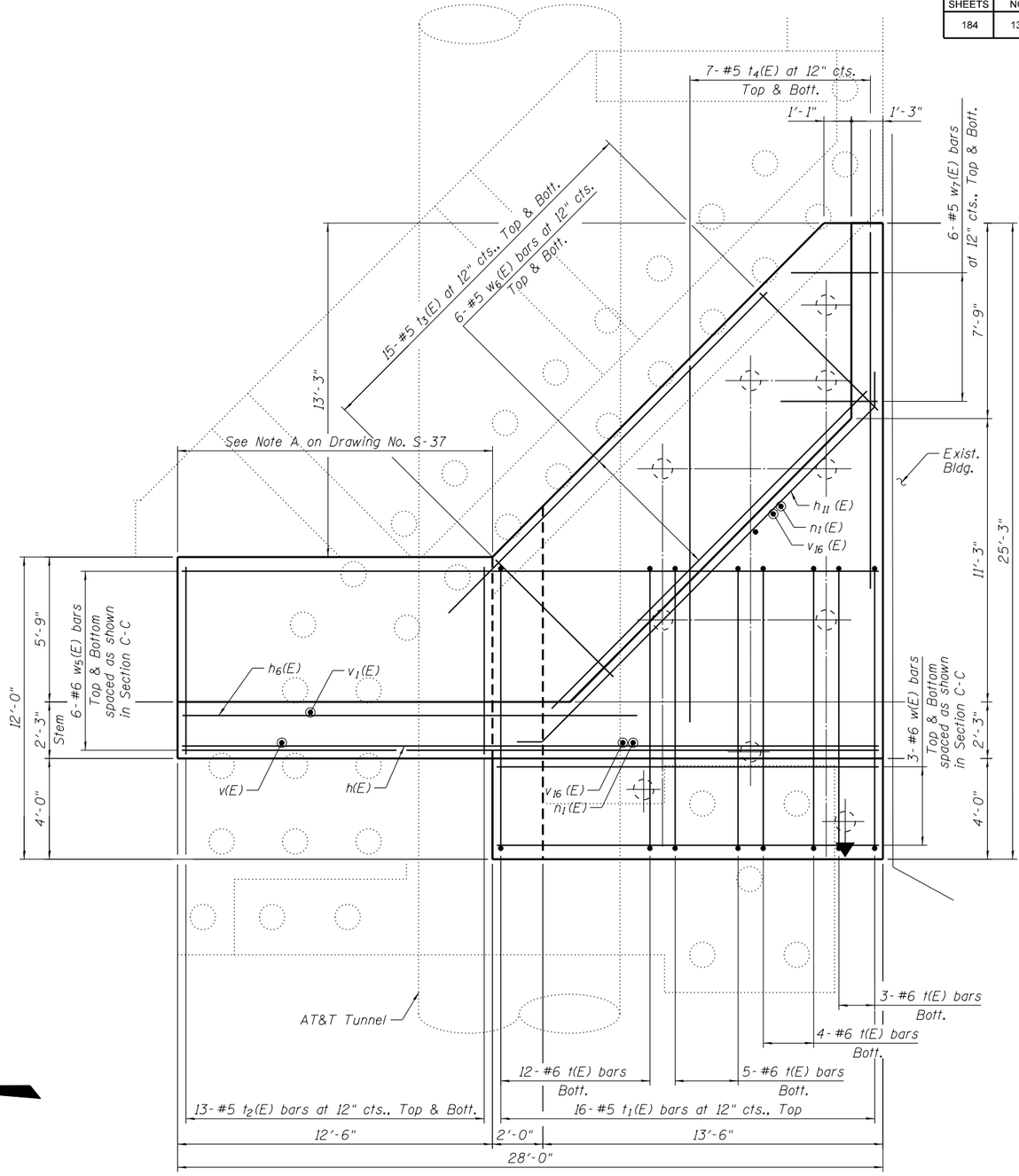

FOOTING PLAN AT ELEV. 8.75

Stage I Construction

N

...\0166090-E5038-033-EA04.dgn

11/29/2017 1:47:17 PM

DESIGN: SF				
DRAWN: MTR				
CHECKED: DF				
APPROVED: DF				
DATE: 11/29/2017				
SCALE:				
FILE:	NO.	BY	DATE	DESCRIPTION
	REVISIONS			

KEY PLAN:

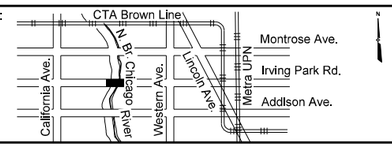

CDOT
CHICAGO DEPARTMENT OF TRANSPORTATION

BOWMAN, BARRETT & ASSOCIATES INC.
CONSULTING ENGINEERS
Chicago, Illinois
312.228.0100
www.bbandainc.com

W. IRVING PARK ROAD AT NORTH BRANCH CHICAGO RIVER

EAST ABUTMENT FOOTING PLAN III
STRUCTURE NO. 016-6090

PROJECT NO.	E-5-038
DRAWING NO.	S-35
CONTRACT NO.	XXXXX

TOTAL SHEETS	SHEET NO.
184	136

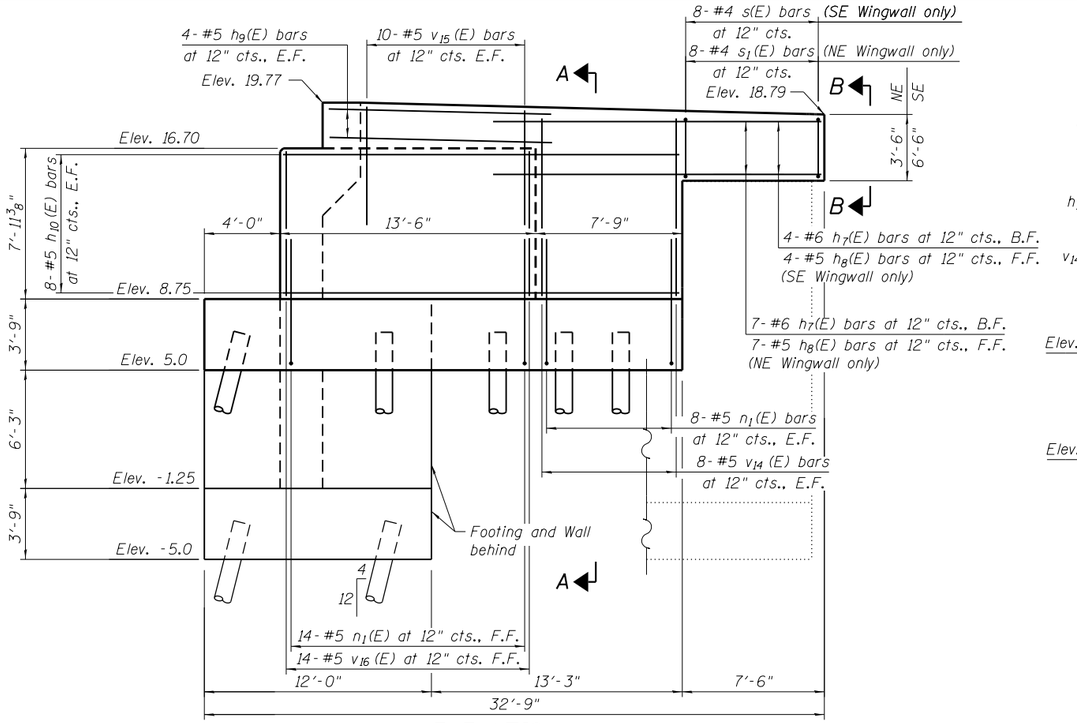

ELEVATION

SE Wingwall shown, NE Wingwall similar, except as noted.
(Looking North)

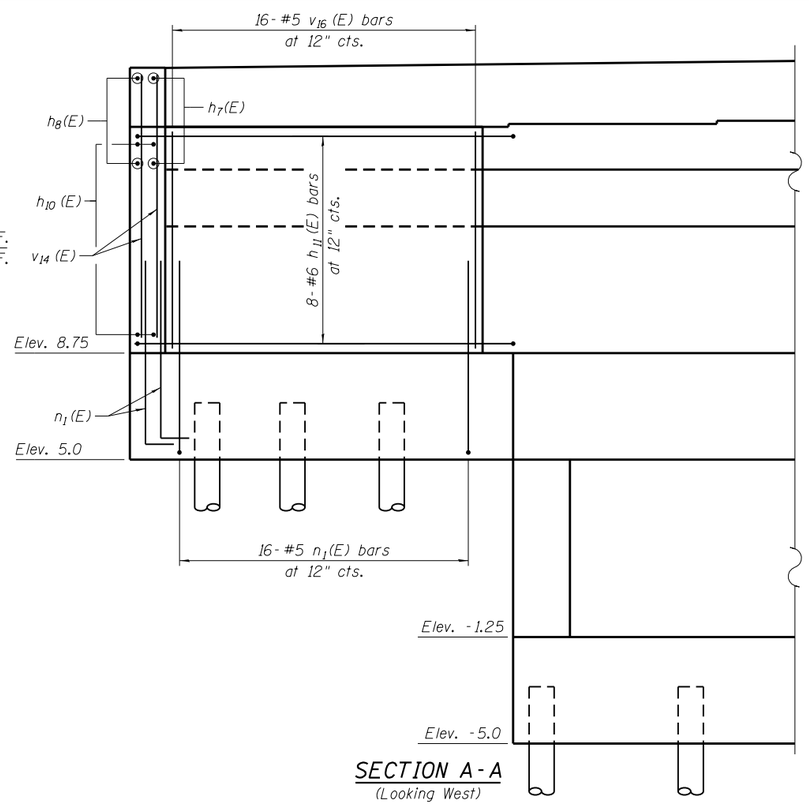

SECTION A-A

(Looking West)

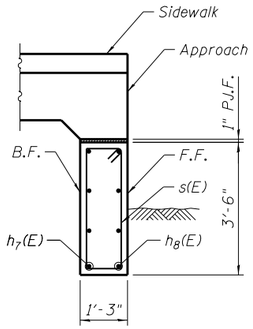

SECTION B-B

(SE Wingwall)

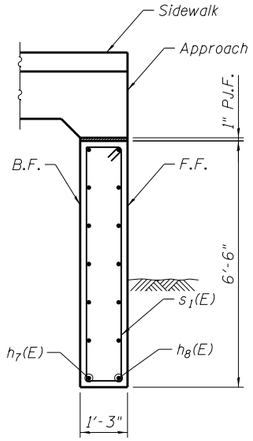

SECTION B-B

(NE Wingwall)

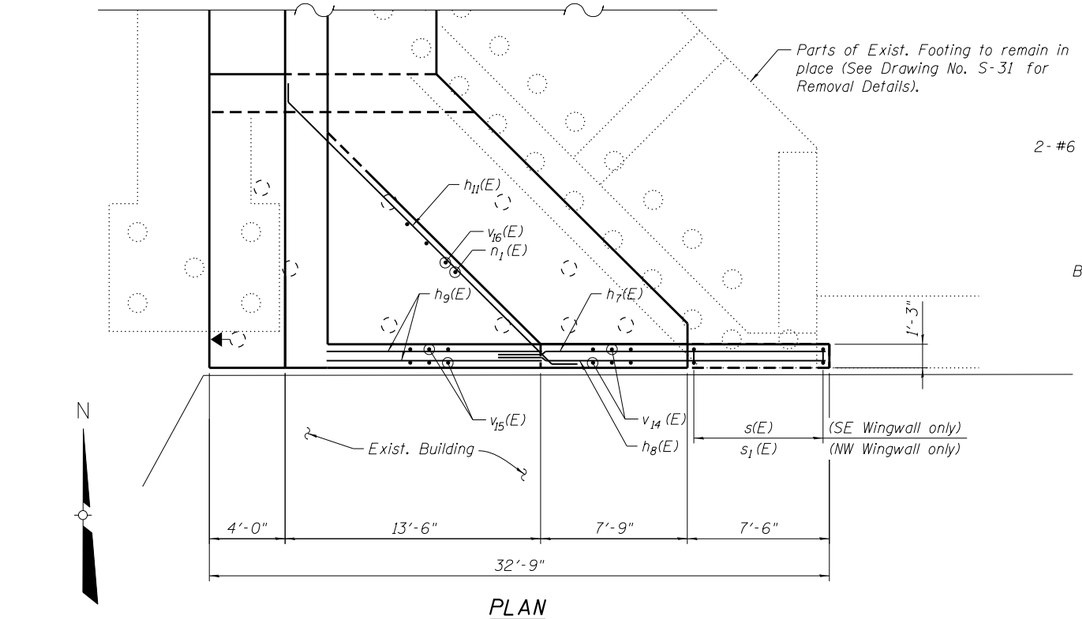

PLAN

SE Wingwall shown, NE Wingwall similar

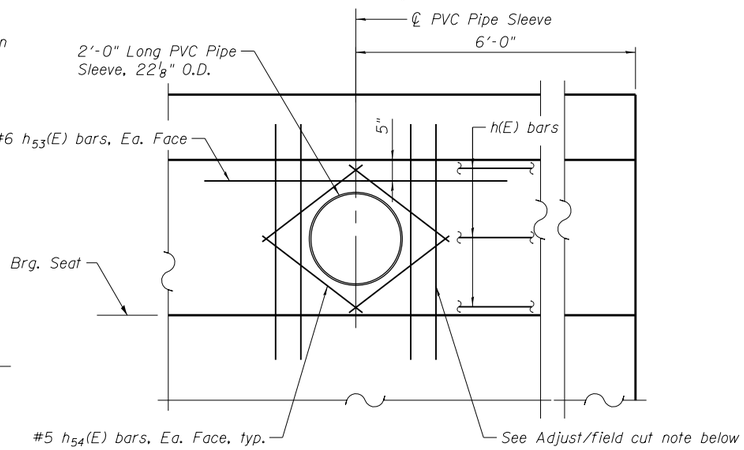

DETAIL X

(E. Abut. shown)

Adjust/field cut bars at PVC Pipe Sleeve as follows:

Move #4 v_2(E), #4 v_3(E), #5 v_6(E), #5 v(E) bars to clear PVC pipe sleeve.

Add #6 h_{53}(E) bars & #5 h_{54}(E) bars

Notes:

1. F.F. denotes Front Face
   B.F. denotes Back Face
   E.F. denotes Each Face
2. For other reinforcements, see Drawing Nos. S-32, S-34, S-35 and S-37.

Water Main Installation Procedure through the PVC Pipe Sleeve:

After the water main, wrapped in insulation and stainless steel jacket, installed through the pipe sleeve, fill the gap between the stainless steel jacket and PVC pipe with foam insulation.

Seal the gap, between the stainless steel jacket and the PVC sleeve, at each end with caulking with backet rod.

DESIGN: SF				
DRAWN: MTR				
CHECKED: DF				
APPROVED: DF				
DATE: 11/29/2017				
SCALE:				
FILE:	NO.	BY	DATE	DESCRIPTION
	REVISIONS			

KEY PLAN:

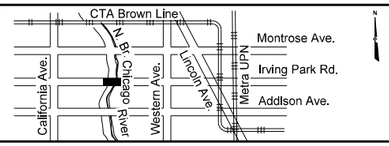

CDOT
CHICAGO DEPARTMENT OF TRANSPORTATION

BOWMAN, BARRETT & ASSOCIATES INC.
CONSULTING ENGINEERS
Chicago, Illinois
312.228.0100
www.bbandainc.com

W. IRVING PARK ROAD AT NORTH BRANCH CHICAGO RIVER

EAST ABUTMENT WINGWALL DETAILS
STRUCTURE NO. 016-6090

PROJECT NO. E-5-038
DRAWING NO. S-36
CONTRACT NO. XXXXX

...\0166090-E5038-034-EA05.dgn
11/29/2017 1:47:19 PM

TOTAL SHEETS	SHEET NO.
184	137

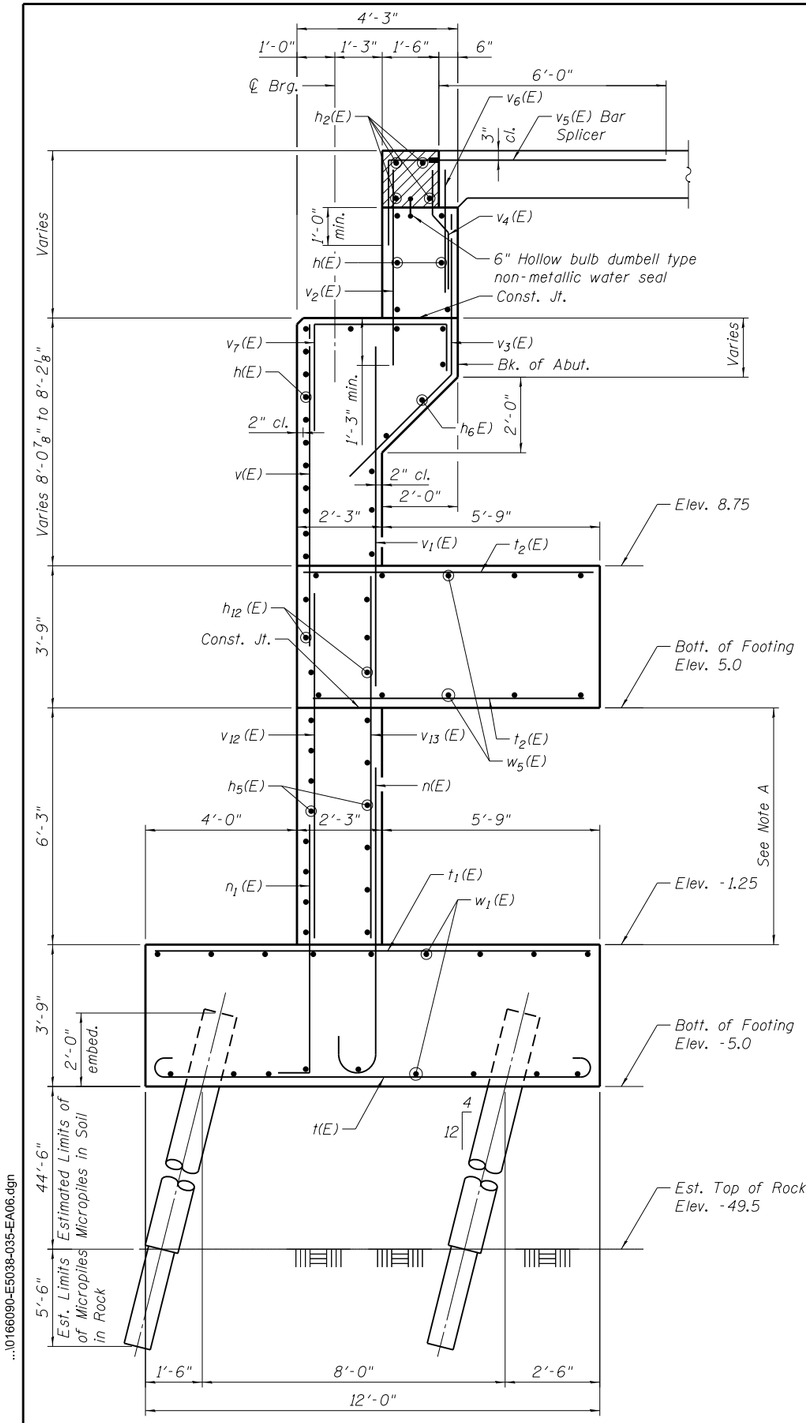

SECTION A-A

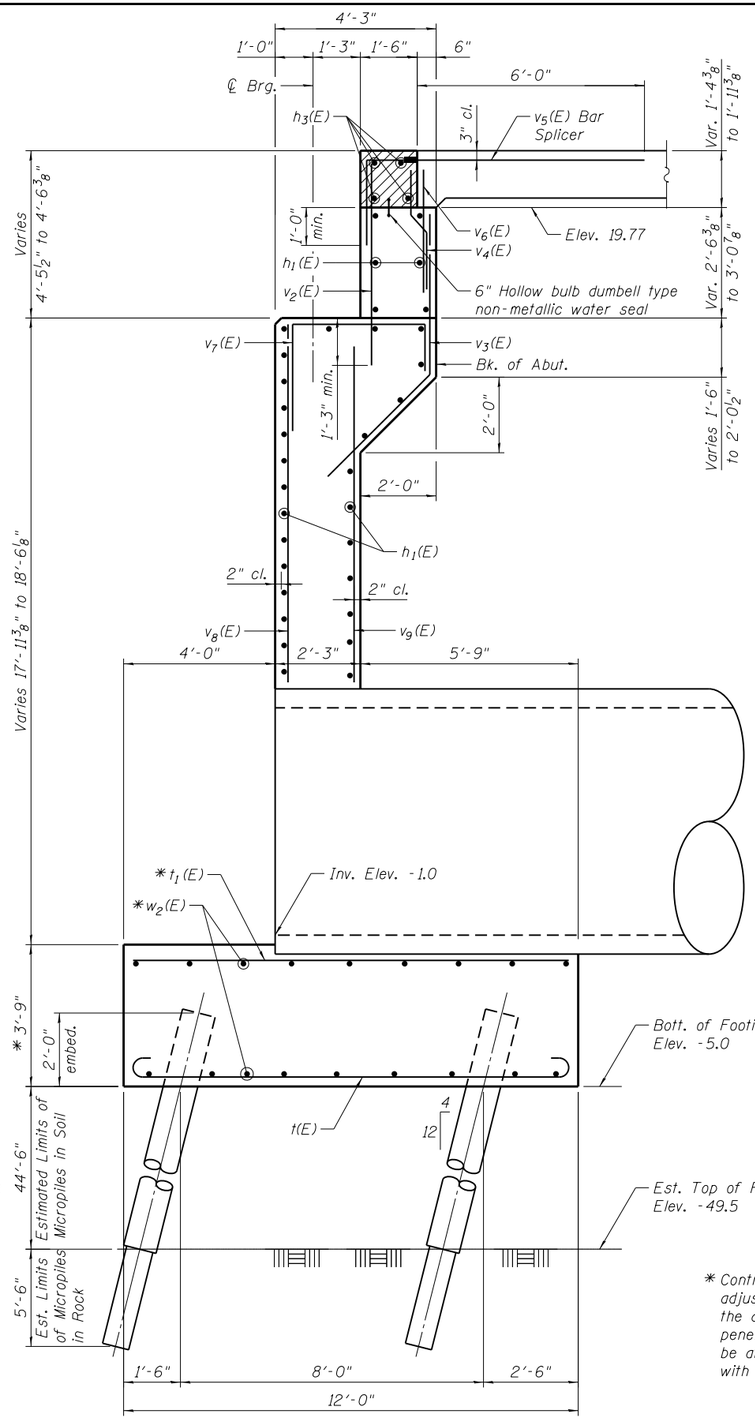

SECTION B-B

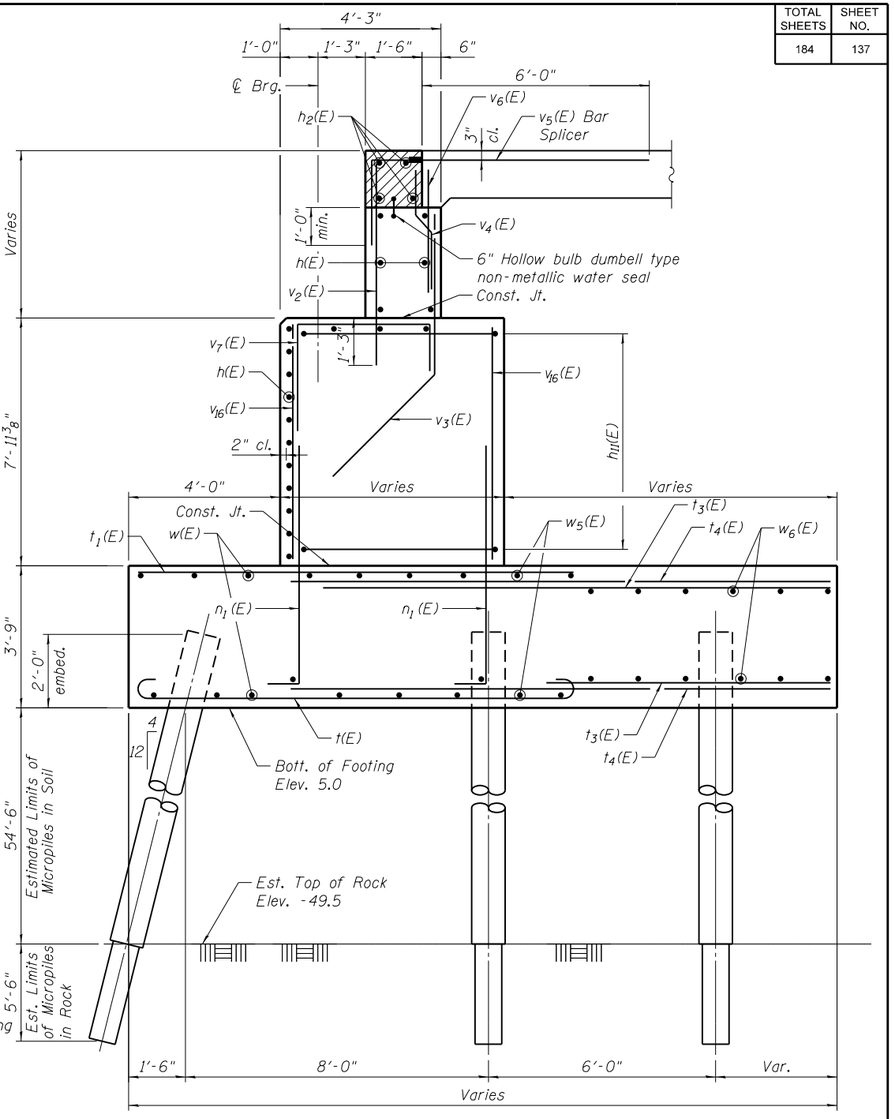

SECTION C-C

* Contractor shall adjust footing thickness and adjust t_1(E) & w_2(E) bars downwards within the area beneath the pipe to accommodate pipe penetration thru abutment wall such that it can be attached to the end section. Cost included with Concrete Structures.

Notes:

See Drawing No. S-38 for Pipe underdrains locations.

Note A:
The void between elevations -1.25 and + 5.0 shall be filled with CLSM or concrete.

...\0166090-E5038-035-EA06.dgn
11/29/2017 1:47:21 PM

DESIGN: SF				
DRAWN: MTR				
CHECKED: DF				
APPROVED: DF				
DATE: 11/29/2017				
SCALE:				
FILE:	NO.	BY	DATE	DESCRIPTION
	REVISIONS			

KEY PLAN:

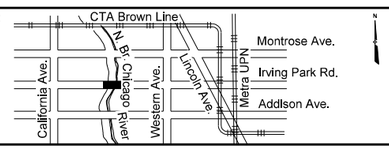

CDOT
CHICAGO DEPARTMENT OF TRANSPORTATION

BOWMAN, BARRETT & ASSOCIATES INC.
CONSULTING ENGINEERS
Chicago, Illinois
312.228.0100
www.bbandainc.com

W. IRVING PARK ROAD AT NORTH BRANCH CHICAGO RIVER

EAST ABUTMENT SECTIONS AND DETAILS I STRUCTURE NO. 016-6090

PROJECT NO. E-5-038
DRAWING NO. S-37
CONTRACT NO. XXXXX

EAST ABUTMENT BILL OF MATERIAL

TOTAL SHEETS	SHEET NO.
184	138

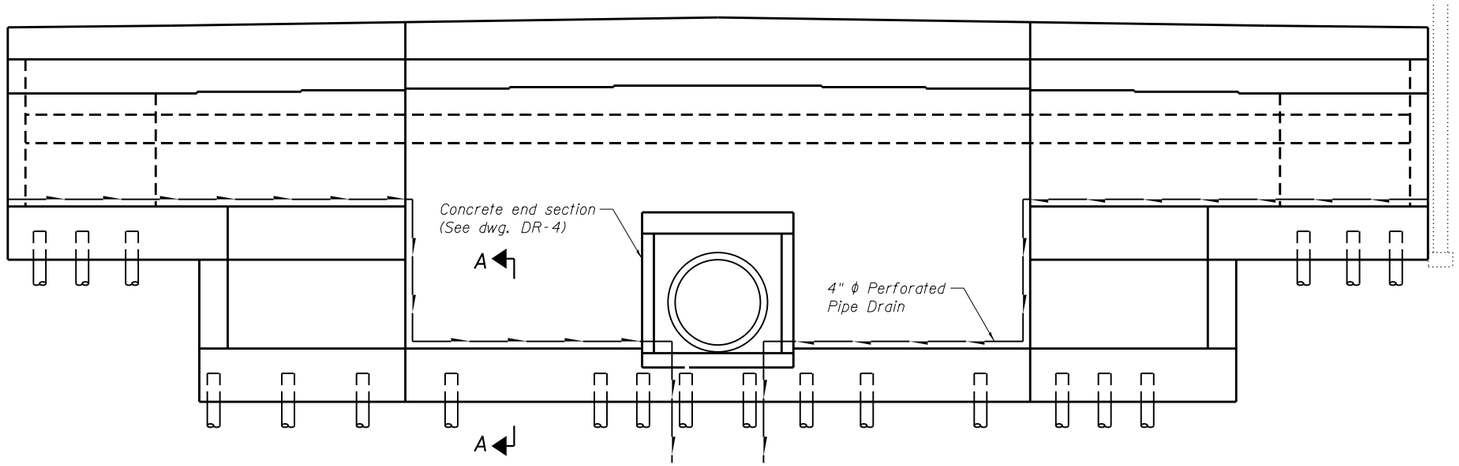

ELEVATION
(Showing Pipe Underdrains)

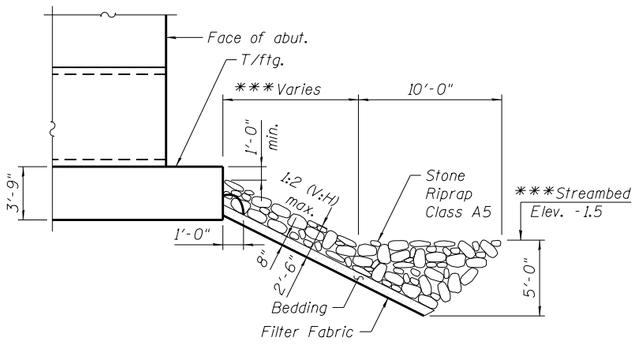

SECTION THRU RIPRAP

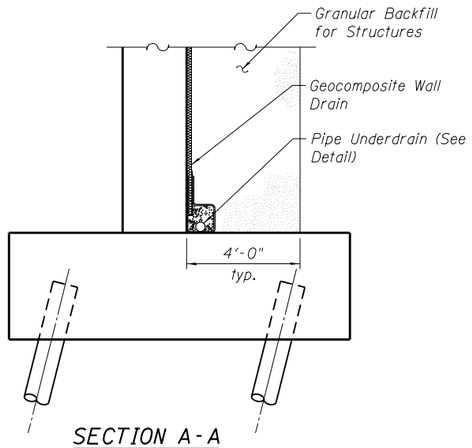

SECTION A-A

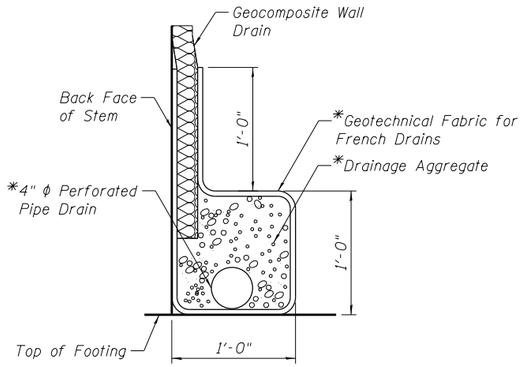

PIPE UNDERDRAIN DETAIL

* Included in the cost of Pipe Underdrains for Structures, 4" (See Special Provisions)

MIN. BAR LAP
#5 - 3'-3"
#6 - 3'-10"

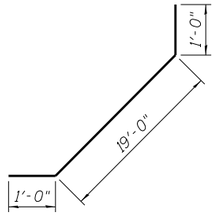

BAR $h_{11}(E)$

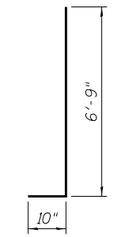

BAR $n_1(E)$

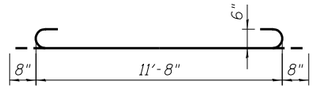

BAR t(E)

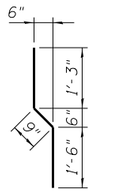

BAR $v_4(E)$

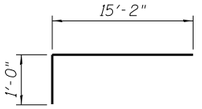

BAR w(E)

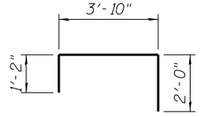

BAR $v_7(E)$

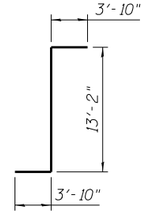

BAR $w_4(E)$

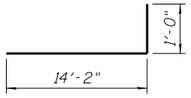

BAR $w_1(E)$

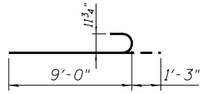

BAR n(E)

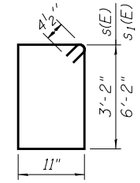

BAR s(E) & $s_1(E)$

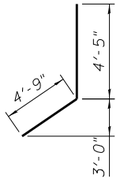

BAR $v_3(E)$

** Bar $v_5(E)$ shall be furnished by bar splicer supplier and cost included in the contract unit price for Bar Splicers. See Drawing No. S-57 for Bar Splicer Assembly Details.

*** Place riprap down to elevation -1.5. Excavate existing material as necessary to maintain existing stream bed elevations. Excavation of existing material to be included in cost of Stone Riprap, Class A5. Contractor shall verify riprap limits in the field and can make necessary adjustments subject to Commissioner approval.

Notes:

1. Reinforcement bars designated (E) shall be epoxy coated.
2. Apply concrete sealer to all exposed concrete surfaces of the abutment.
3. All edges shall have standard $\frac{3}{4}$" chamfer.
4. See Drawing No. S-57 for Bar Splicer Details.

Bar	No.	Size	Length	Shape
h(E)	42	#5	27'-8"	
$h_1(E)$	70	#5	23'-6"	
$h_2(E)$	8	#6	27'-8"	
$h_3(E)$	8	#6	23'-9"	
$h_4(E)$	30	#5	19'-0"	
$h_5(E)$	28	#5	14'-2"	
$h_6(E$	14	#5	18'-11"	
$h_7(E)$	11	#6	17'-6"	
$h_8(E)$	11	#5	17'-6"	
$h_9(E)$	16	#5	13'-0"	
$h_{10}(E)$	32	#5	20'-11"	
$h_{11}(E)$	16	#6	21'-0"	
$h_{12}(E)$	12	#5	14'-6"	
$h_{53}(E)$	2	#6	6'-0"	
$h_{54}(E)$	8	#5	2'-6"	
$h_{55}(E)$	8	#4	3'-8"	
n(E)	84	#9	10'-3"	
$n_1(E)$	156	#5	7'-7"	
s(E)	8	#4	8'-11"	
$s_1(E)$	8	#4	14'-11"	
t(E)	154	#6	13'-0"	
$t_1(E)$	107	#5	11'-8"	
$t_2(E)$	52	#5	7'-8"	
$t_3(E)$	60	#5	8'-6"	
$t_4(E)$	28	#5	15'-0"	
v(E)	26	#5	11'-6"	
$v_1(E)$	34	#6	10'-6"	
$v_2(E)$	107	#4	5'-6"	
$v_3(E)$	107	#4	9'-2"	
$v_4(E)$	103	#4	3'-6"	
$v_5(E)$	103	#5	9'-10"	
$v_6(E)$	103	#5	3'-6"	
$v_7(E)$	103	#5	7'-0"	
$v_8(E)$	6	#5	11'-9"	
$v_9(E)$	8	#6	11'-9"	
$v_{10}(E)$	38	#5	18'-2"	
$v_{11}(E)$	50	#6	17'-0"	
$v_{12}(E)$	26	#5	9'-3"	
$v_{13}(E)$	34	#6	9'-10"	
$v_{14}(E)$	32	#5	10'-3"	
$v_{15}(E)$	40	#5	6'-3"	
$v_{16}(E)$	92	#5	7'-9"	
w(E)	12	#6	16'-2"	
$w_1(E)$	36	#6	15'-2"	
$w_2(E)$	36	#6	24'-0"	
$w_3(E)$	24	#5	11'-9"	
$w_4(E)$	36	#6	20'-10"	
$w_5(E)$	24	#6	27'-8"	
$w_6(E)$	24	#5	19'-0"	
$w_7(E)$	24	#5	4'-0"	

Item	Unit	Quantity
Granular Backfill for Structures	Cu. Yd.	519
Braced Excavation	Cu. Yd.	981
High Performance Concrete Structures	Cu. Yd.	475.9
Reinforcement Bars, Epoxy Coated	Pound	29,950
Permanent Sheet Piling	Sq. Ft.	280
Concrete Sealer	Sq. Ft.	2,017
Geocomposite Wall Drain	Sq. Yd.	235
Controlled-Low Strength Material	Cu. Yd.	34
Pipe Underdrain for Structures 4"	Foot	175
Micropile Load Test	Each	1
Micro-piles	Each	46
Micropile Proof Load Test	Each	3
Stone Riprap, Class A5	Sq. Yd.	300
Filter Fabric	Sq. Yd.	300

...\0166090-E5038-036-EA07.dgn
11/29/2017 1:47:24 PM

DESIGN: SF				
DRAWN: MTR				
CHECKED: DF				
APPROVED: DF				
DATE: 11/29/2017				
SCALE:				
FILE:	NO.	BY	DATE	DESCRIPTION
	REVISIONS			

KEY PLAN:

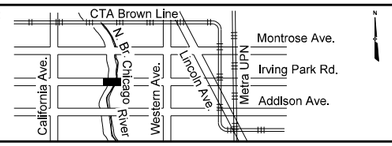

CDOT
CHICAGO DEPARTMENT OF TRANSPORTATION

BOWMAN, BARRETT & ASSOCIATES INC.
CONSULTING ENGINEERS
Chicago, Illinois
312.228.0100
www.bbandainc.com

W. IRVING PARK ROAD AT NORTH BRANCH CHICAGO RIVER

EAST ABUTMENT SECTIONS AND DETAILS II
STRUCTURE NO. 016-6090

PROJECT NO. E-5-038
DRAWING NO. S-38
CONTRACT NO. XXXXX

TOTAL SHEETS	SHEET NO.
184	139

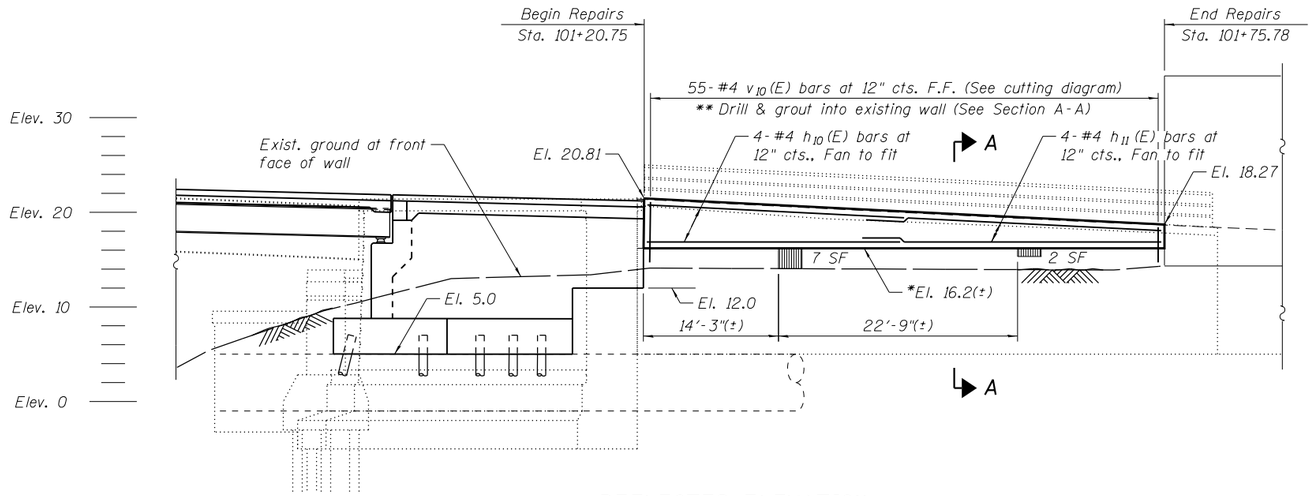

REFLECTED ELEVATION
(Looking North)

NOTES

1. Wall stations and offsets are relative to ℄ of Irving Park Rd. at the front face of wall.
2. Contractor shall verify locations of spalled or unsound concrete in the field.
3. See sheet S-18 for details of proposed ornamental hand railing.

LEGEND

Concrete Removal

Structural Repair of Concrete (Depth Equal to or Less Than 5")

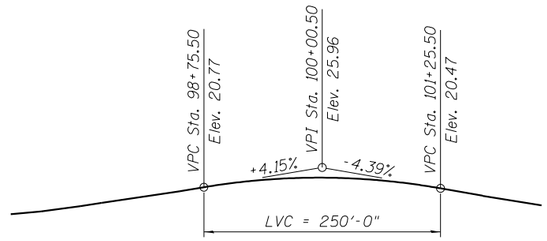

PROFILE GRADE
(6' Offset from ℄ IL Rte. 19 Irving Park Rd.)

BILL OF MATERIAL

Bar	No.	Size	Length	Shape
h_{10}(E)	8	#4	27'-5"	
h_{11}(E)	8	#4	29'-11"	
v_{10}(E)	55	#4	7'-10"	
Concrete Removal			Cu. Yd.	13
Structural Repair of Concrete (Depth Equal to or Less than 5")			Sq. Ft.	9
Concrete Structures (Retaining Wall)			Cu. Yd.	11
Reinforcement Bars, Epoxy Coated			Pound	600
Structure Excavation			Cu. Yd.	31
Handrail Removal			Foot	56

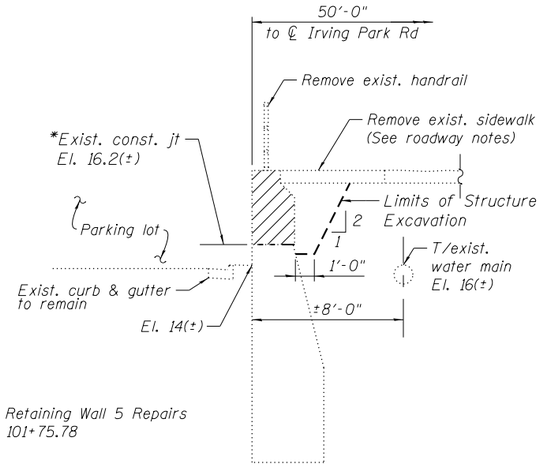

SECTION A-A
(Showing Removals)

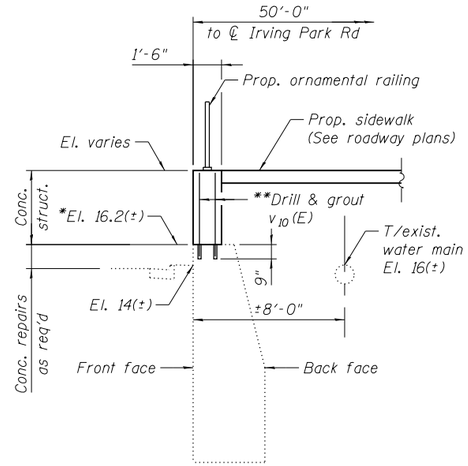

SECTION A-A
(Showing Proposed Work)

* Contractor shall verify the elevation of the existing horizontal costruction joint in the field and shall remove the wall down to that elevation along the entire length to be repaired.

** Drilling and epoxy grouting in accordance with Article 584 of the Standard Specifications. Cost included with Reinforcement Bars, Epoxy Coated.

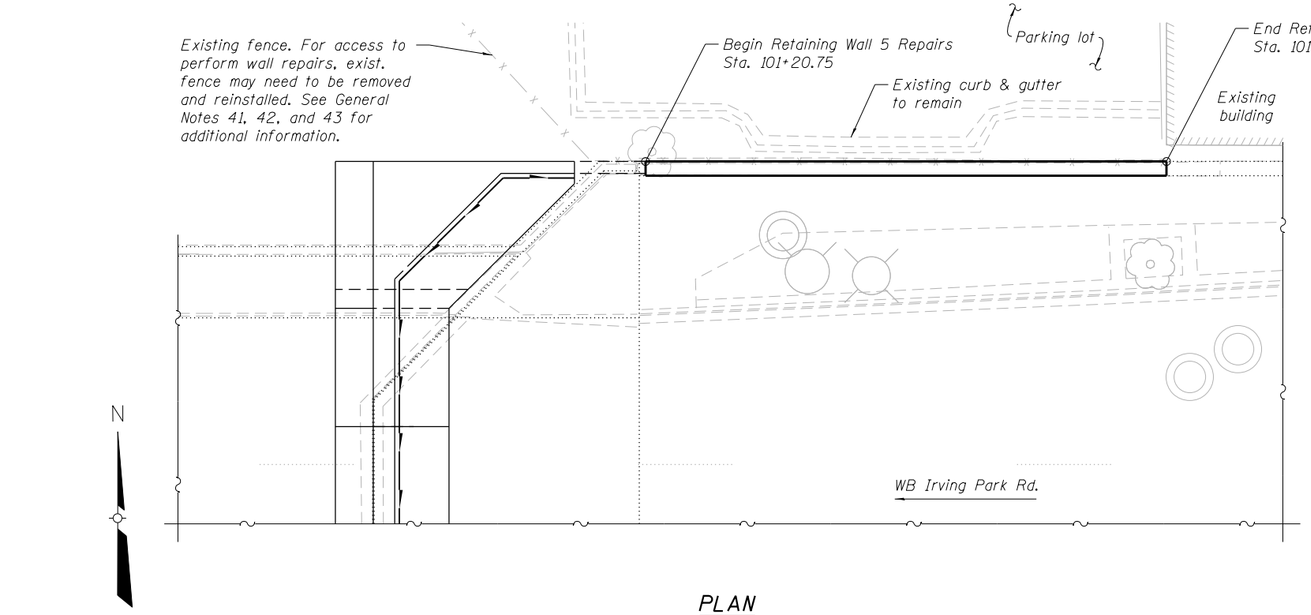

PLAN

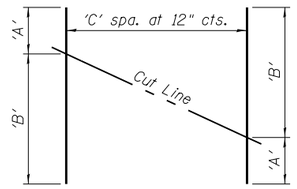

TABLE OF DIMENSIONS

Bar	'A'	'B'	'C'
v_{10}(E)	2'-8"	5'-2"	54

BAR CUTTING DIAGRAM
Order bars full length. Cut as shown and use remainder of bars at 12" cts. back face.

DESIGN:				
DRAWN:				
CHECKED:				
APPROVED: DF				
DATE: 11/29/2017				
SCALE:				
FILE:	NO.	BY	DATE	DESCRIPTION
	REVISIONS			

KEY PLAN:

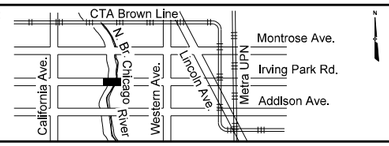

CDOT
CHICAGO DEPARTMENT OF TRANSPORTATION

BOWMAN, BARRETT & ASSOCIATES INC.
CONSULTING ENGINEERS
Chicago, Illinois
312.228.0100
www.bbandainc.com

W. IRVING PARK ROAD AT NORTH BRANCH CHICAGO RIVER

NE WINGWALL REPAIR DETAILS
STRUCTURE NO. 016-6090

PROJECT NO. E-5-038

DRAWING NO. S-39

CONTRACT NO. XXXXX

...\RW5-E5038-001-GPE.dgn

11/29/2017 1:47:26 PM

TOTAL SHEETS	SHEET NO.
184	140

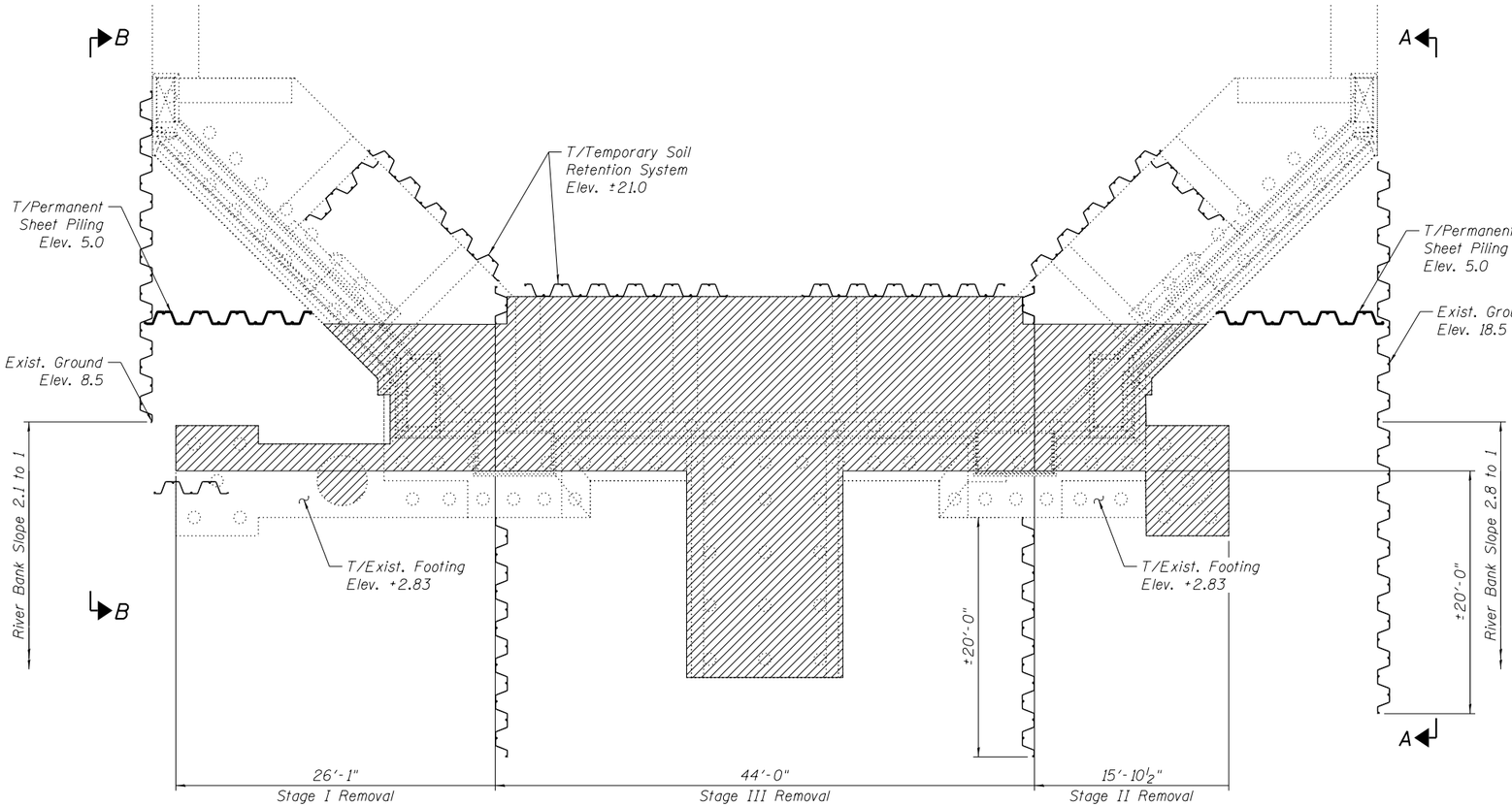

PLAN N

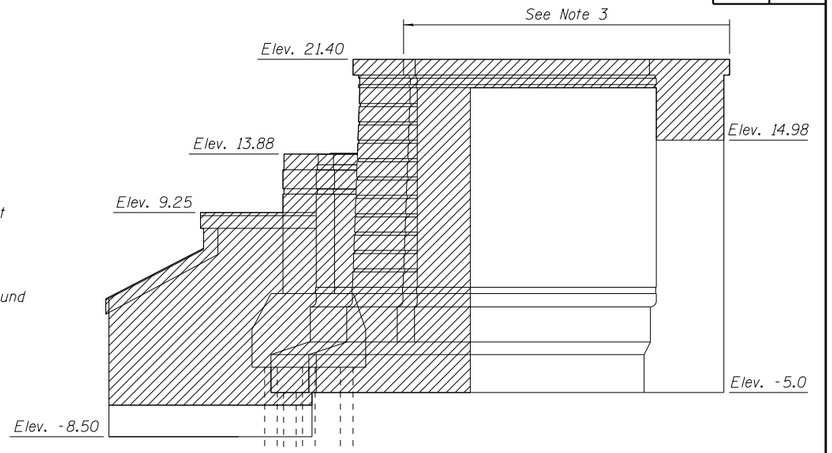

VIEW A-A
(Looking South)

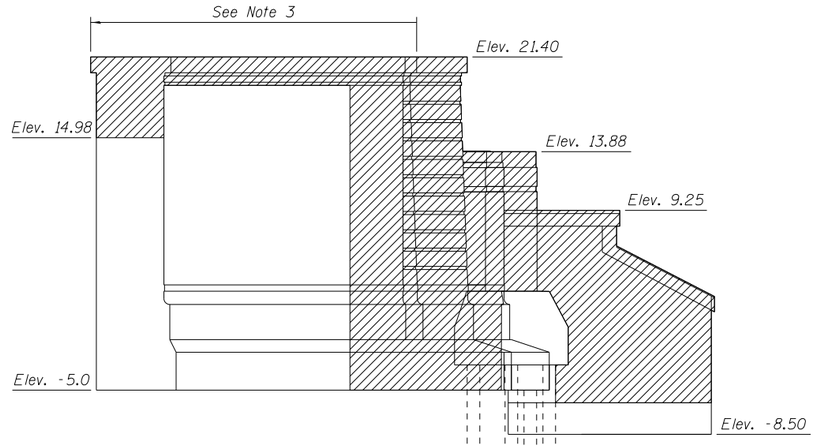

VIEW B-B
(Looking North)

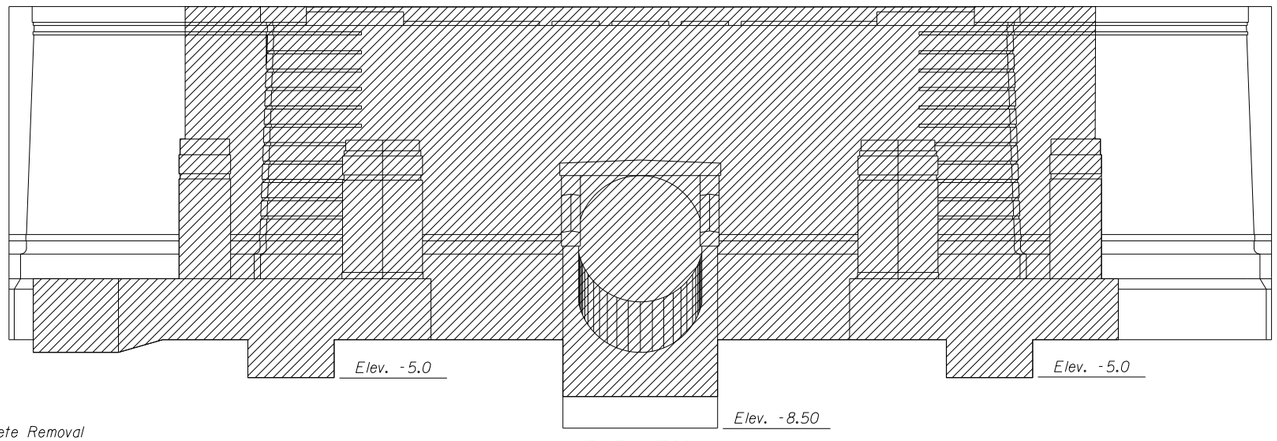

ELEVATION
(Looking West)

LEGEND

Concrete Removal

NOTES

1. The Contractor shall submit a Temporary Soil Retention System design including plan details and calculations for review and acceptance by the Commissioner. In addition, Temporary Soil Retention System computations and plans shall be submitted to the Office of Underground Coordination (OUC) for review and approval. Temporary Soil Retention System for abutment removal shall not be paid for separately, but shall be included in the cost of Braced Excavation.
2. Exist. Abutment shown hatched, shall be removed in it's entirety. The rest of the exist. abutment to remain to serve as temporary soil retention to facilitate new construction.
3. Portion of exist. abut. are incorporated into the Braced Excavation Plan. After the new construction is complete, remove top portion of existing structure, 2 feet below prop. grade.
4. Concrete Removal is included with the cost of Removal of Exist. Structures.

DESIGN:				
DRAWN:				
CHECKED:				
APPROVED: DF				
DATE: 11/29/2017				
SCALE:				
FILE:	NO.	BY	DATE	DESCRIPTION
	REVISIONS			

KEY PLAN:

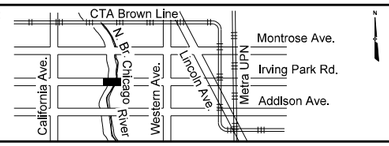

CDOT
CHICAGO DEPARTMENT OF TRANSPORTATION

BOWMAN, BARRETT & ASSOCIATES INC.
CONSULTING ENGINEERS
Chicago, Illinois
312.228.0100
www.bbandainc.com

W. IRVING PARK ROAD AT NORTH BRANCH CHICAGO RIVER

WEST ABUTMENT REMOVAL DETAILS
STRUCTURE NO. 016-6090

PROJECT NO. E-5-038
DRAWING NO. S-40
CONTRACT NO. XXXXX

...\0166090-E5038-037-RD02.dgn
3:12:12 PM
4/27/2018

TOTAL SHEETS	SHEET NO.
184	141

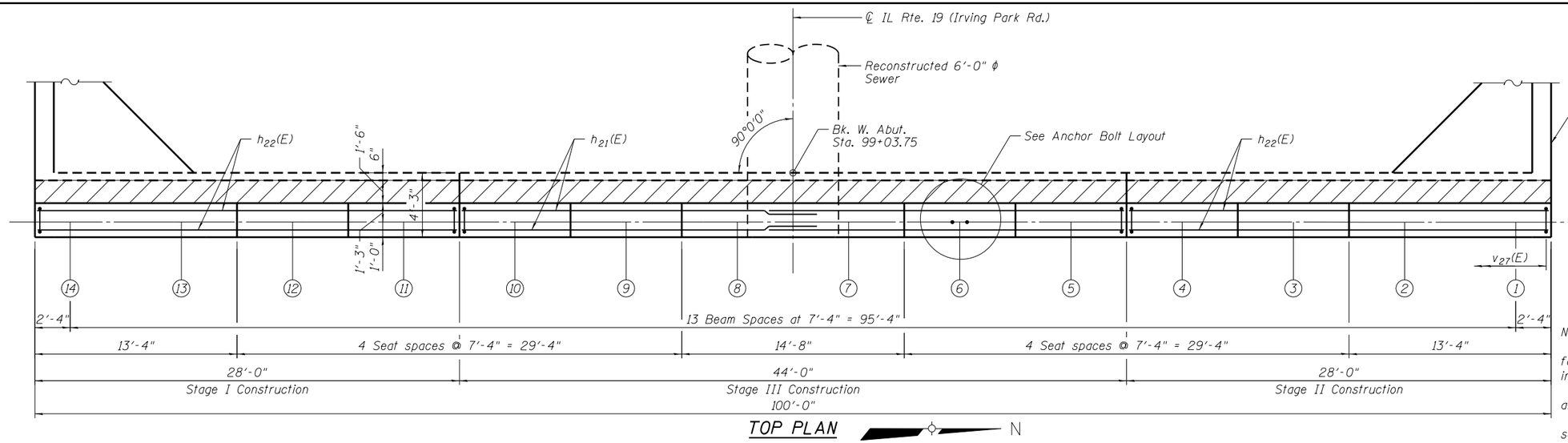

TOP PLAN

N

ANCHOR BOLT LAYOUT

(Typ. for Each Beam Location)

Notes:

Hatched area to be poured after superstructure false work has been removed. Quantity of concrete included with High Performance Concrete Superstructures.

For Section A-A, B-B & C-C, see Drawing No. S-45 and S-46.

For Bar Bending Diagram and Bill of Material see Drawing No. S-47.

Bars indicated thus 2x2-#6 etc. indicates 2 lines of bars with 2 lengths per line.

F.F. denotes Front Face

B.F. denotes Back Face

*** Contractor shall verify the invert of the existing sewer at the face of abutment in the field. The contractor shall make adjustments to the proposed footing and invert of the proposed sewer as necessary, subject to the approval of the Engineer.

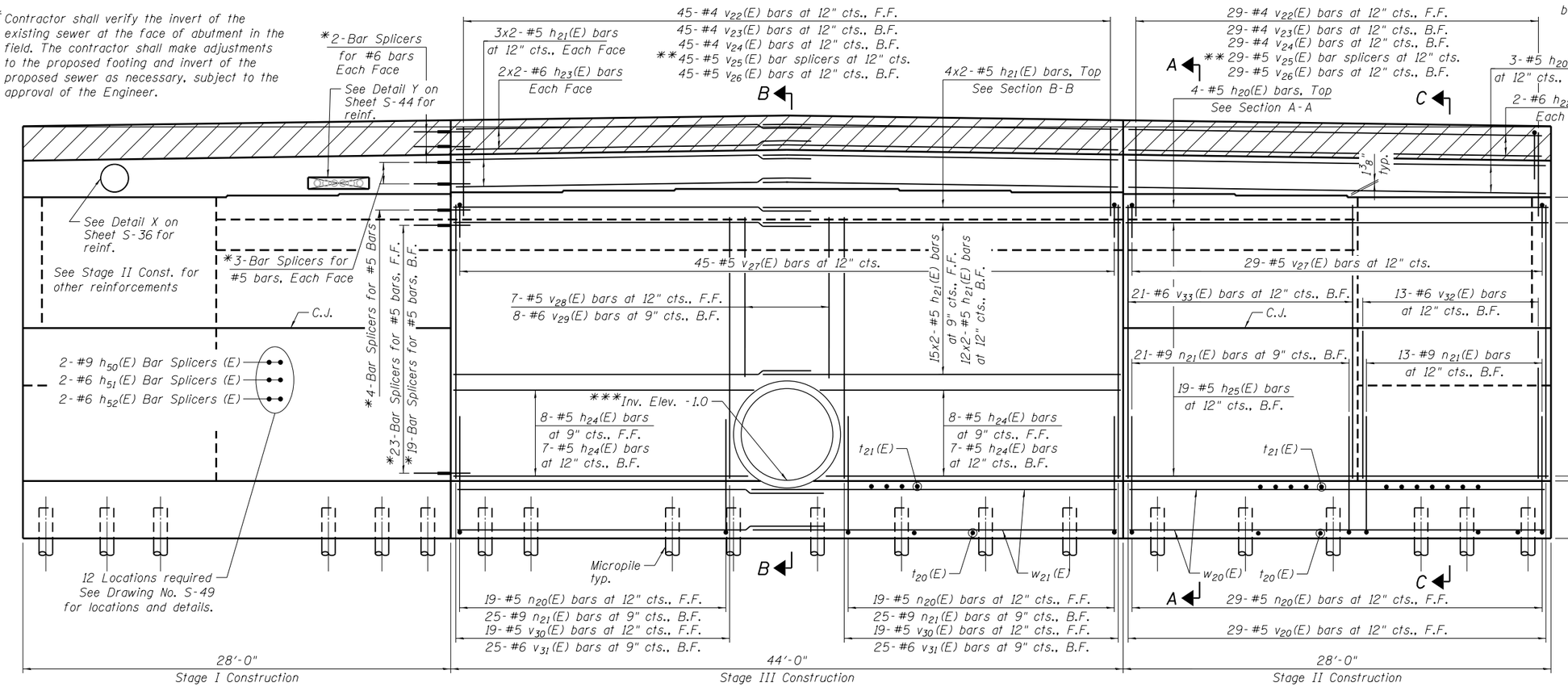

ELEVATION

(Looking East)

For location of Bar Splicers to support brackets for Multi-use path, see Drawing No. S-49

*Typ. for Stage I and II Const.

**See Bar Splicer Assembly Details on Drawing No. S-57.

BEARING SEAT ELEVATIONS

Beam	Brg. Seat Elevation
1	17.29
2	17.29
3	17.40
4	17.51
5	17.62
6	17.73
7	17.84
8	17.84
9	17.73
10	17.62
11	17.51
12	17.40
13	17.29
14	17.29

DESIGN: SF				
DRAWN: MTR				
CHECKED: DF				
APPROVED: DF				
DATE: 11/29/2017				
SCALE:				
FILE:	NO.	BY	DATE	DESCRIPTION
	REVISIONS			

KEY PLAN:

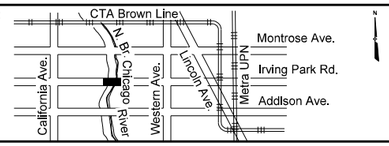

CDOT CHICAGO DEPARTMENT OF TRANSPORTATION

BOWMAN, BARRETT & ASSOCIATES INC.
CONSULTING ENGINEERS
Chicago, Illinois
312.228.0100
www.bbandainc.com

W. IRVING PARK ROAD AT NORTH BRANCH CHICAGO RIVER

WEST ABUTMENT PLAN AND ELEVATION STRUCTURE NO. 016-6090

PROJECT NO. E-5-038

DRAWING NO. S-41

CONTRACT NO. XXXXX

...\0166090-E5038-038-WA01.dgn

11/29/2017 1:47:31 PM

TOTAL SHEETS	SHEET NO.
184	142

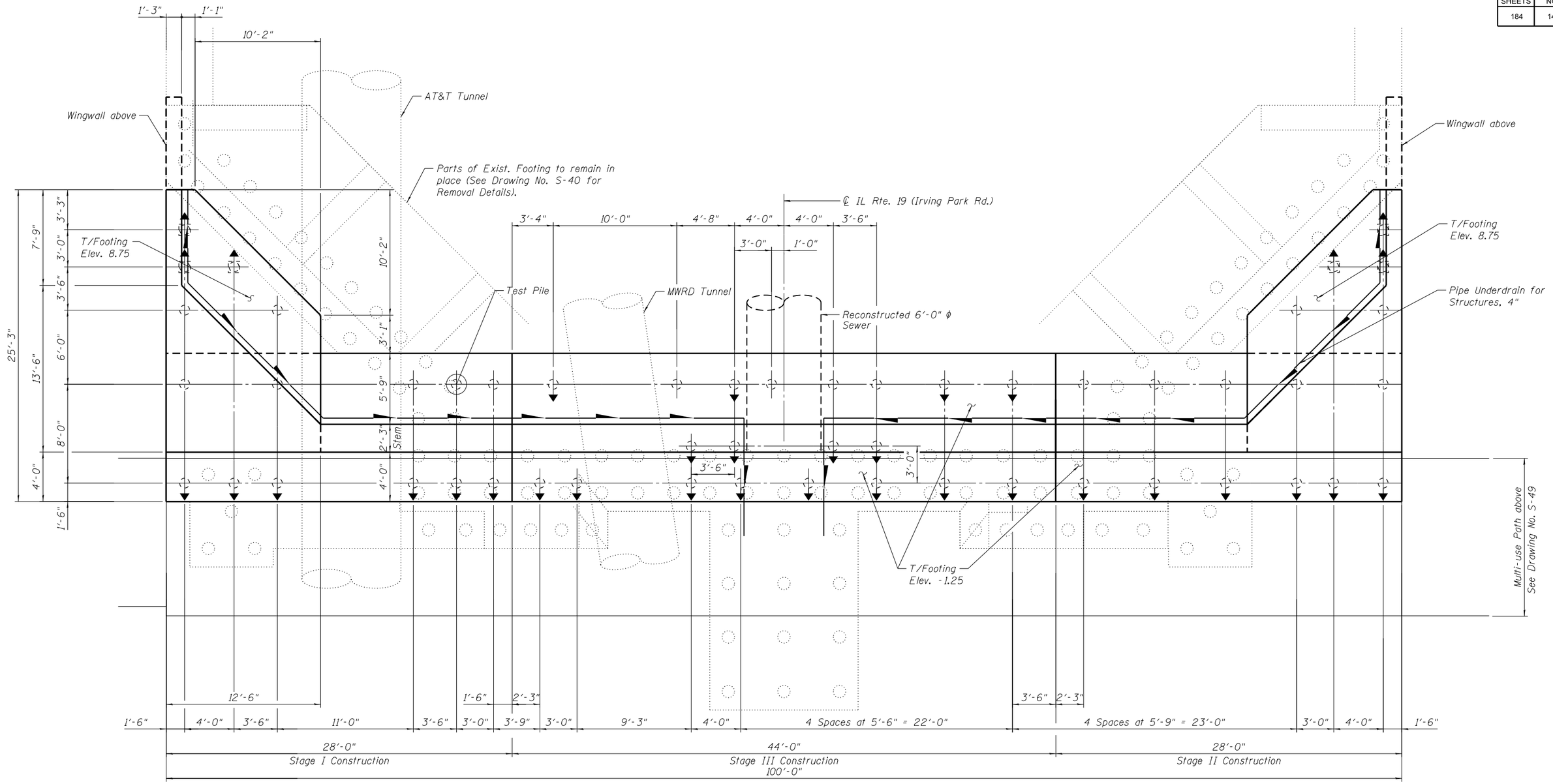

FOOTING PLAN
(Showing Micropiles)

N

LEGEND

- Indicates 4:12 Battered Micropile
- Indicates Vertical Micropile
- Indicates 4:12 Battered Micropile with Top Plate

Notes:

1. For Micropile Details see Drawing No. S-56

DESIGN: SF				
DRAWN: MTR				
CHECKED: DF				
APPROVED: DF				
DATE: 11/29/2017				
SCALE:				
FILE:	NO.	BY	DATE	DESCRIPTION
	REVISIONS			

KEY PLAN:

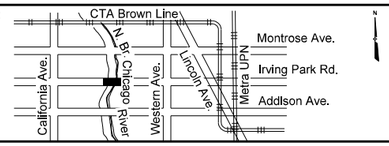

CDOT
CHICAGO DEPARTMENT OF TRANSPORTATION

BOWMAN, BARRETT & ASSOCIATES INC.
CONSULTING ENGINEERS
Chicago, Illinois
312.228.0100
www.bbandainc.com

W. IRVING PARK ROAD AT NORTH BRANCH CHICAGO RIVER

WEST ABUTMENT FOOTING PLAN I
STRUCTURE NO. 016-6090

PROJECT NO. E-5-038
DRAWING NO. S-42
CONTRACT NO. XXXXX

...\0166090-E5038-039-WA02.dgn
11/29/2017 1:47:34 PM

TOTAL SHEETS	SHEET NO.
184	143

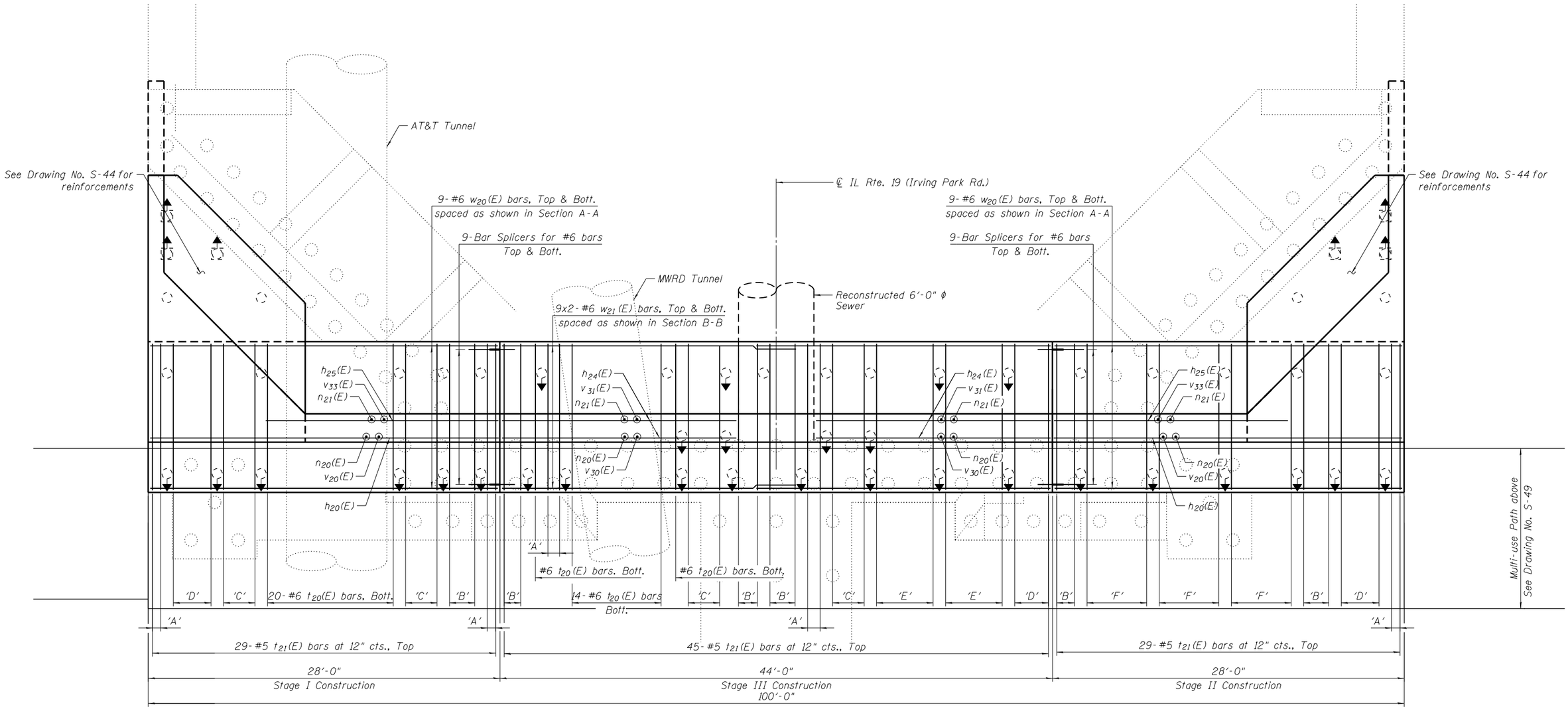

FOOTING PLAN
(Showing Reinforcements)

N

Notes:

1. 'A' - 2-#6 t_{20}(E) bars, Bott.
   'B' - 4-#6 t_{20}(E) bars, Bott.
   'C' - 5-#6 t_{20}(E) bars, Bott.
   'D' - 6-#6 t_{20}(E) bars, Bott.
   'E' - 9-#6 t_{20}(E) bars, Bott.
   'F' - 10-#6 t_{20}(E) bars, Bott.
2. For Section A-A & B-B see Drawing No. S-45 .

DESIGN: SF				
DRAWN: MTR				
CHECKED: DF				
APPROVED: DF				
DATE: 11/29/2017				
SCALE:				
FILE:	NO.	BY	DATE	DESCRIPTION
	REVISIONS			

KEY PLAN:

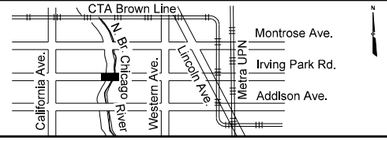

CDOT
CHICAGO DEPARTMENT OF TRANSPORTATION

BOWMAN, BARRETT & ASSOCIATES INC.
CONSULTING ENGINEERS
Chicago, Illinois
312.228.0100
www.bbandainc.com

W. IRVING PARK ROAD AT NORTH BRANCH CHICAGO RIVER

WEST ABUTMENT FOOTING PLAN II
STRUCTURE NO. 016-6090

PROJECT NO. E-5-038
DRAWING NO. S-43
CONTRACT NO. XXXXX

11/29/2017 1:47:36 PM ...\0166090-E5038-040-WA03.dgn

TOTAL SHEETS	SHEET NO.
184	144

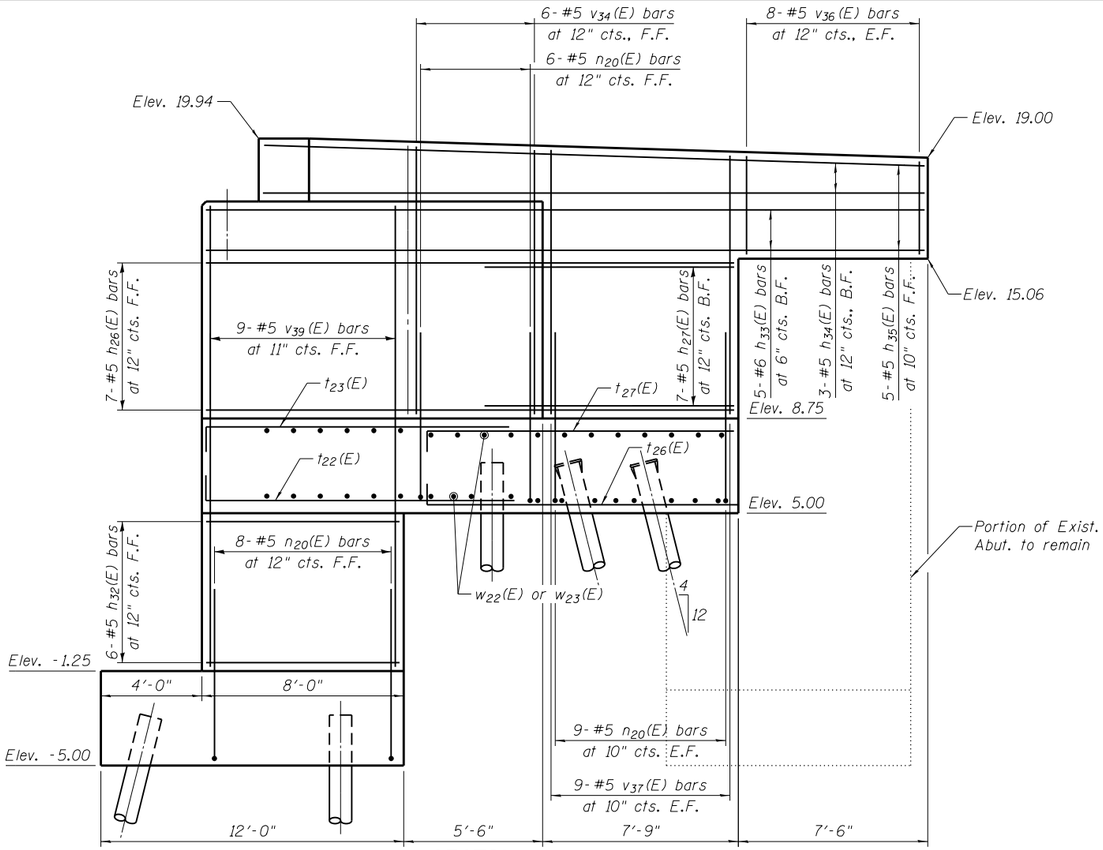

SECTION A-A

(Southwest Wingwall shown, Northwest Wingwall similar)

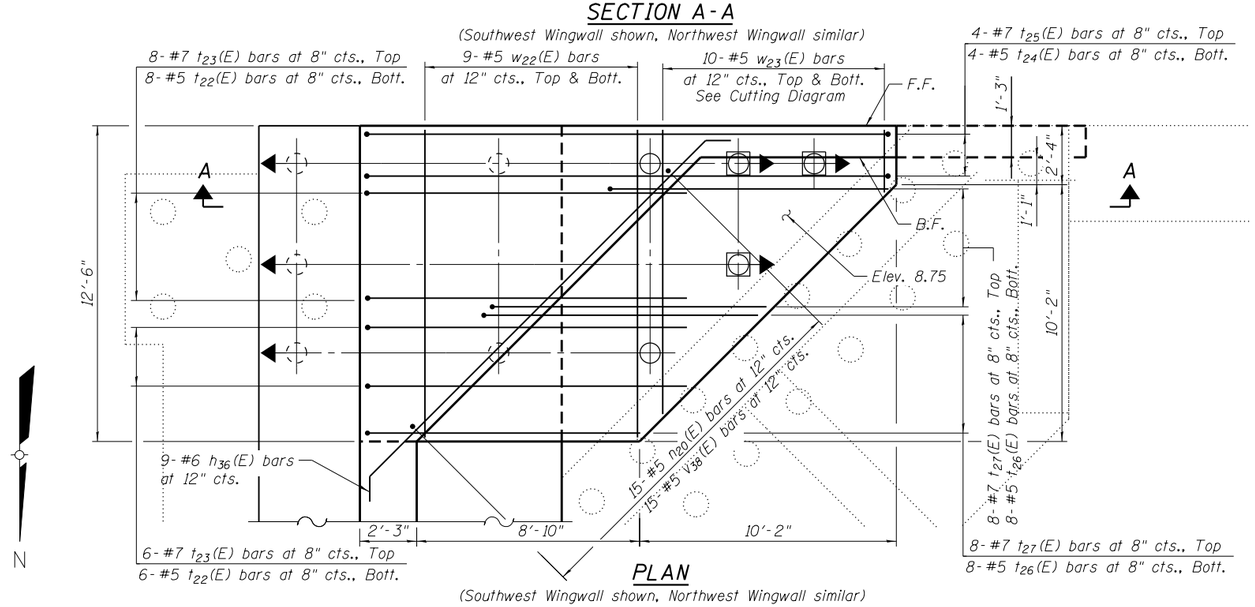

PLAN

(Southwest Wingwall shown, Northwest Wingwall similar)

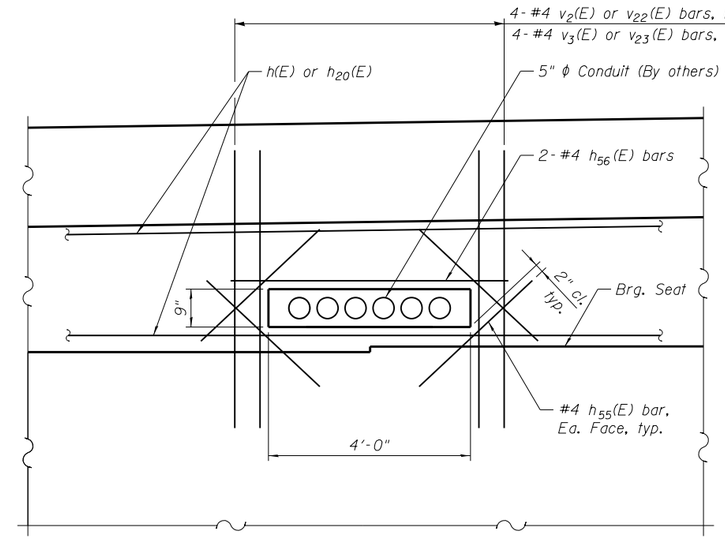

DETAIL Y

(Black-out Detail for COMED Conduits)

Notes:

1. F.F. denotes Front Face
   B.F. denotes Back Face
   E.F. denotes Each Face
2. For other reinforcements, see Drawing Nos. S-41 & S-43

REVISIONS				
NO.	BY	DATE	DESCRIPTION	

DESIGN: SF
DRAWN: MTR
CHECKED: DF
APPROVED: DF
DATE: 11/29/2017
SCALE:
FILE:

KEY PLAN:

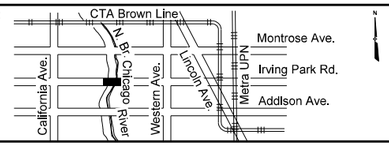

CDOT
CHICAGO DEPARTMENT OF TRANSPORTATION

BOWMAN, BARRETT & ASSOCIATES INC.
CONSULTING ENGINEERS
Chicago, Illinois
312.228.0100
www.bbandainc.com

W. IRVING PARK ROAD AT NORTH BRANCH CHICAGO RIVER

W. ABUTMENT WINGWALL DETAILS
STRUCTURE NO. 016-6090

PROJECT NO. E-5-038
DRAWING NO. S-44
CONTRACT NO. XXXXX

11/29/2017 1:47:39 PM ...\0166090-E5038-041-WA04.dgn

TOTAL SHEETS	SHEET NO.
184	145

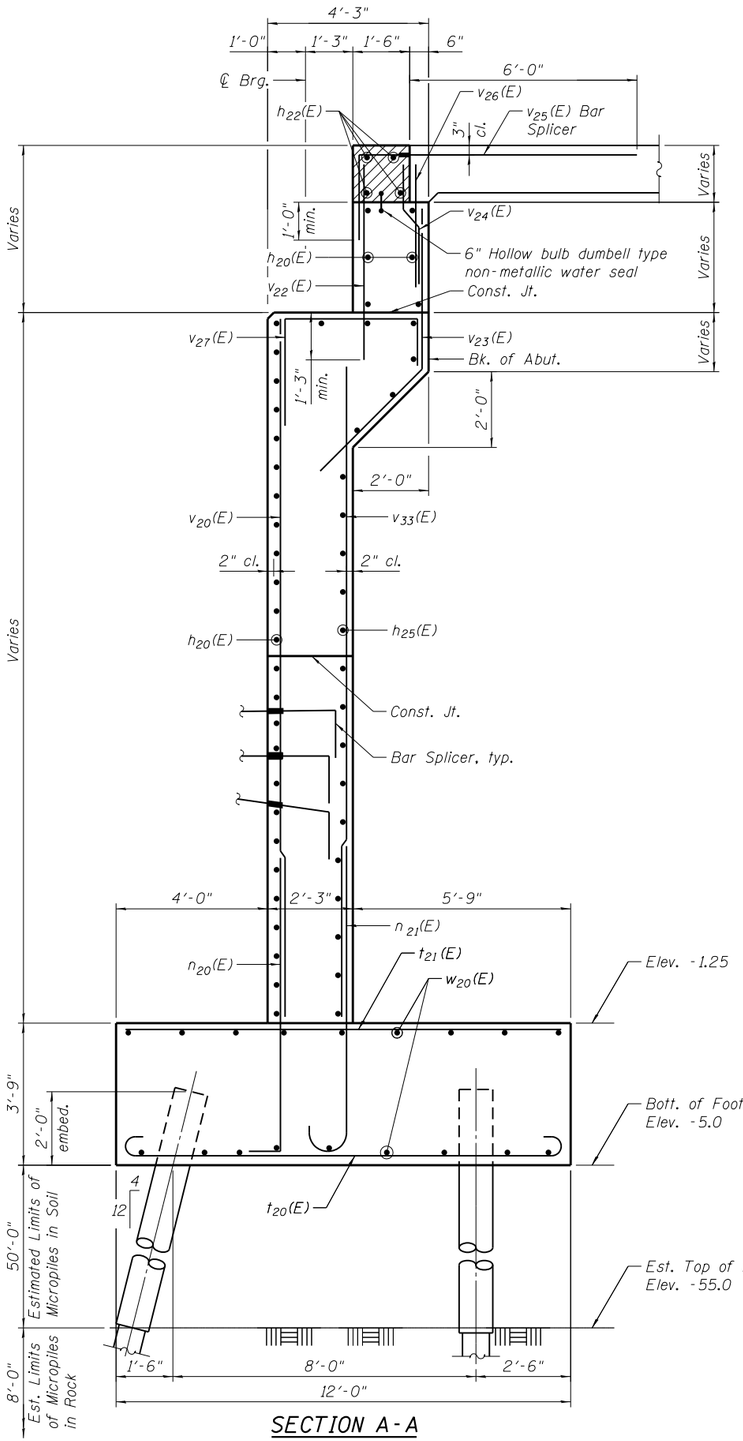

SECTION A-A

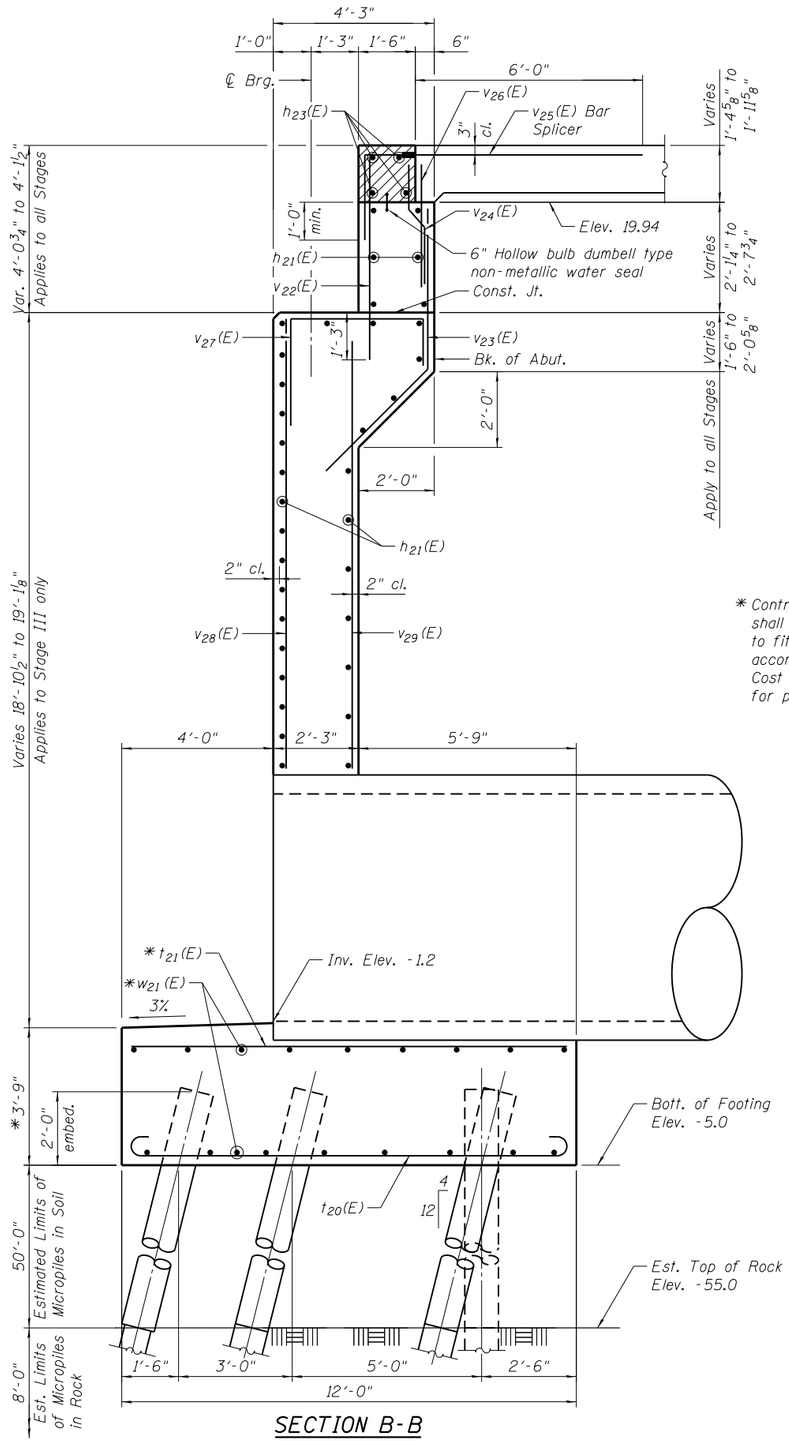

SECTION B-B

* Contractor shall slope footing downwards as shown and shall adjust location of t_{21}(E) & w_{21}(E) bars in the field to fit the slope within the area beneath the pipe to accommodate the installation of Paved Ditch (Special). Cost included with Concrete Structures. (See dwg. DR-5 for paved ditch details.)

Notes:

Multi-use path not shown for clarity.

...\0166090-E5038-042-WA05.dgn
11/29/2017 1:47:41 PM

DESIGN: SF				
DRAWN: MTR				
CHECKED: DF				
APPROVED: DF				
DATE: 11/29/2017				
SCALE:				
FILE:	NO.	BY	DATE	DESCRIPTION
	REVISIONS			

KEY PLAN:

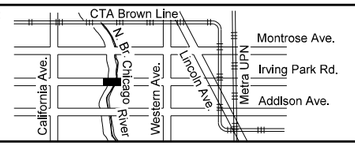

CDOT
CHICAGO DEPARTMENT OF TRANSPORTATION

BOWMAN, BARRETT & ASSOCIATES INC.
CONSULTING ENGINEERS
Chicago, Illinois
312.228.0100
www.bbandainc.com

W. IRVING PARK ROAD AT NORTH BRANCH CHICAGO RIVER

WEST ABUTMENT SECTIONS AND DETAILS I STRUCTURE NO. 016–6090

PROJECT NO. E-5-038

DRAWING NO. S–45

CONTRACT NO. XXXXX

TOTAL SHEETS	SHEET NO.
184	146

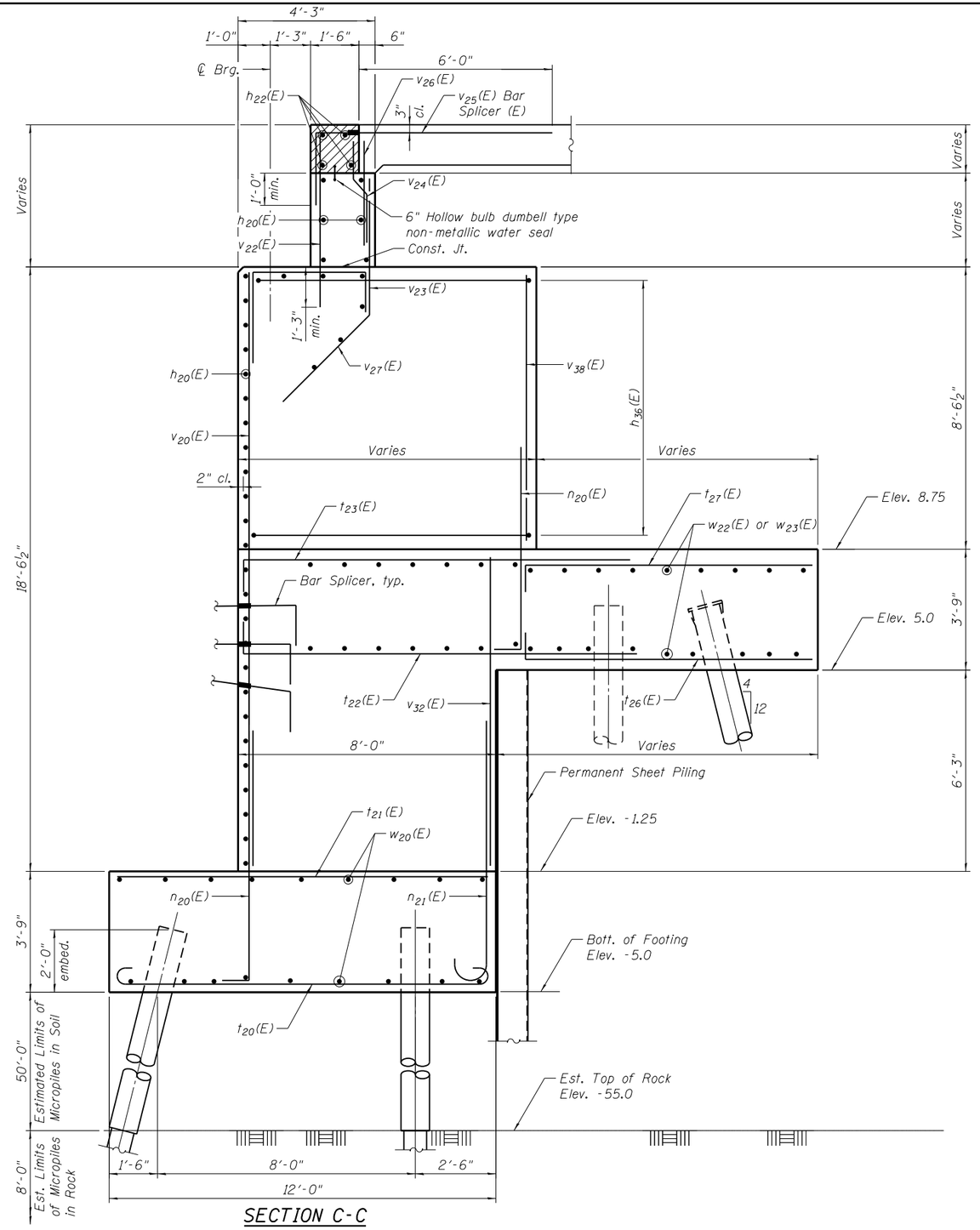

SECTION C-C

Notes:

Multi-use path not shown for clarity.

DESIGN: SF				
DRAWN: MTR				
CHECKED: DF				
APPROVED: DF				
DATE: 11/29/2017				
SCALE:				
FILE:	NO.	BY	DATE	DESCRIPTION
	REVISIONS			

KEY PLAN:

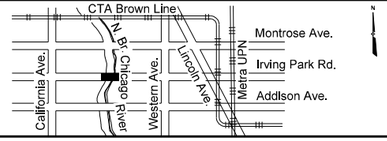

CDOT
CHICAGO DEPARTMENT OF TRANSPORTATION

BOWMAN, BARRETT & ASSOCIATES INC.
CONSULTING ENGINEERS
Chicago, Illinois
312.228.0100
www.bbandainc.com

W. IRVING PARK ROAD AT NORTH BRANCH CHICAGO RIVER

WEST ABUTMENT SECTIONS AND DETAILS II STRUCTURE NO. 016–6090

PROJECT NO. E-5-038

DRAWING NO. S–46

CONTRACT NO. XXXXX

...\0166090-E5038-043-WA06.dgn
11/29/2017 1:47:43 PM

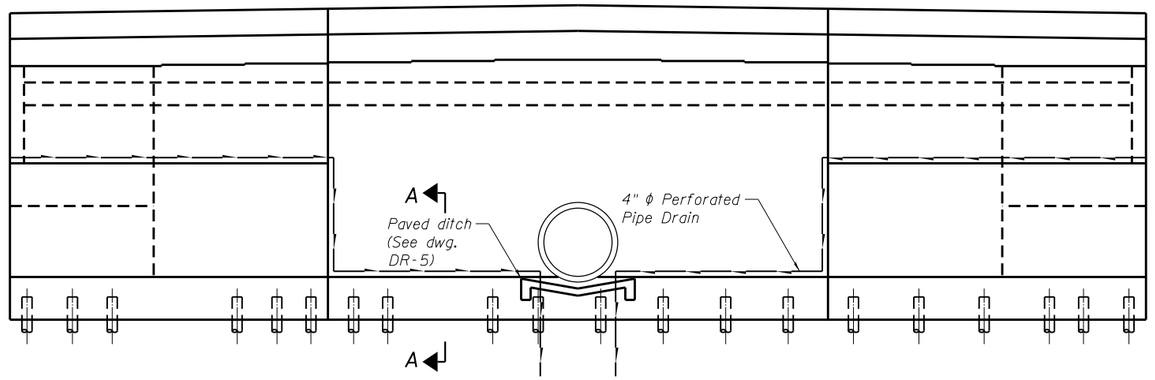

ELEVATION
(Showing Pipe Underdrains)

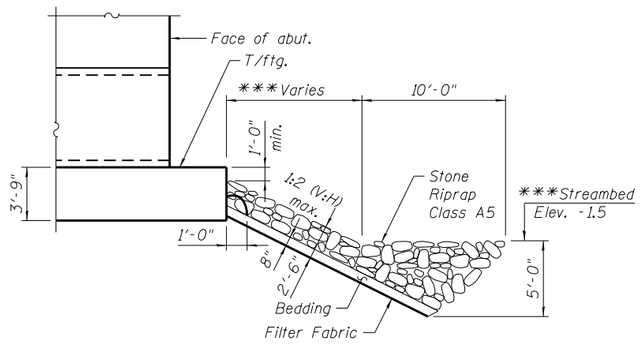

SECTION THRU RIPRAP

** Bars $h_{50}(E)$ thru $h_{52}(E)$, $v_{25}(E)$ shall be furnished by bar splicer supplier and cost included in the contract unit price for Bar Splicers. See Drawing No. S-57 for bar splicer assembly details.

*** Place riprap down to Elevation -1.5. Excavate existing material as necessary to maintain existing stream bed elevations. Excavation of existing material to be included in cost of Stone Riprap, Class A5. Contractor shall verify riprap limits in the field and can make necessary adjustments subject to Commissioner approval.

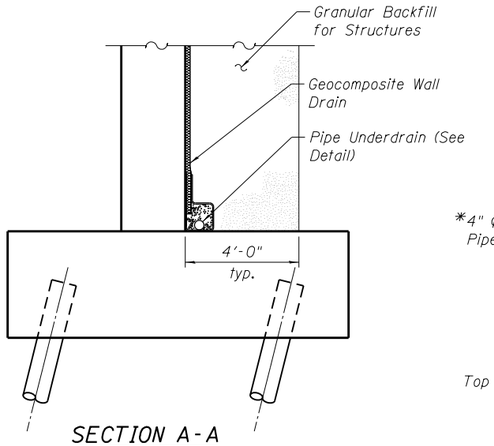

SECTION A-A

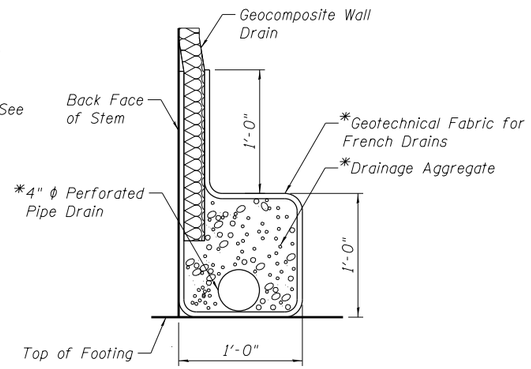

PIPE UNDERDRAIN DETAIL

* Included in the cost of Pipe Underdrains for Structures, 4" (See Special Provisions)

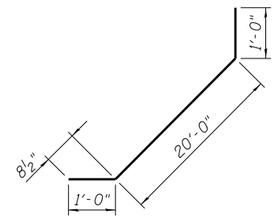

BAR $h_{36}(E)$

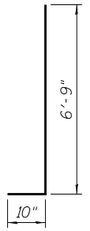

BAR $n_{20}(E)$

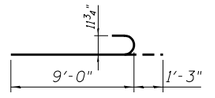

BAR $n_{21}(E)$

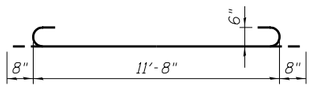

BAR $t_{20}(E)$

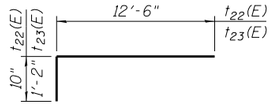

BARS $t_{22}(E)$ & $t_{23}(E)$

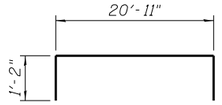

BAR $t_{25}(E)$

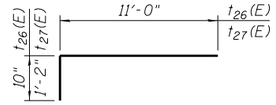

BARS $t_{26}(E)$ & $t_{27}(E)$

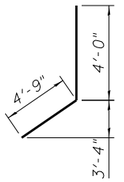

BAR $v_{23}(E)$

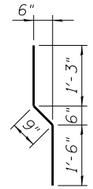

BAR $v_{24}(E)$

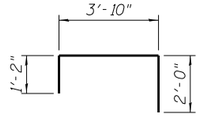

BAR $v_{27}(E)$

MIN. BAR LAP
#5 - 3'-3"
#6 - 3'-10"

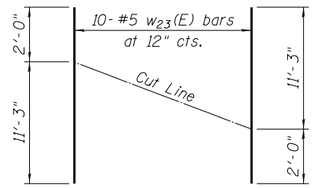

BAR $w_{23}(E)$

Notes:

1. Reinforcement bars designated (E) shall be epoxy coated.
2. Apply concrete sealer to all exposed concrete surfaces of the abutment.
3. All edges shall have standard ¾" chamfer.
4. See Drawing No. S-57 for Bar Splicer Details.

① CUTTING DIAGRAMS

① Order bars full length and cut as shown above. Place as indicated on Plans.

WEST ABUTMENT BILL OF MATERIAL

TOTAL SHEETS	SHEET NO.
184	147

	Bar	No.	Size	Length	Shape
	$h_{20}(E)$	66	#5	27'-8"	
	$h_{21}(E)$	74	#5	23'-6"	
	$h_{22}(E)$	8	#6	27'-8"	
	$h_{23}(E)$	8	#6	23'-9"	
	$h_{24}(E)$	30	#5	18'-6"	
	$h_{25}(E)$	38	#5	18'-7"	
	$h_{26}(E)$	14	#5	20'-11"	
	$h_{27}(E)$	14	#5	10'-10"	
	$h_{28}(E)$	5	#5	31'-11"	
	$h_{33}(E)$	5	#6	28'-5"	
	$h_{34}(E)$	3	#5	26'-2"	
	$h_{35}(E)$	5	#5	26'-2"	
	$h_{36}(E)$	18	#6	21'-0"	
**	$h_{50}(E)$	24	#9	16'-5"	
**	$h_{51}(E)$	24	#6	16'-5"	
**	$h_{52}(E)$	24	#6	16'-5"	
	$h_{53}(E)$	2	#6	6'-0"	
	$h_{54}(E)$	8	#5	2'-6"	
	$h_{55}(E)$	8	#4	3'-8"	
	$h_{56}(E)$	2	#4	6'-0"	
	$n_{20}(E)$	172	#5	7'-7"	
	$n_{21}(E)$	118	#9	10'-0"	
	$t_{20}(E)$	158	#6	13'-0"	
	$t_{21}(E)$	103	#5	11'-8"	
	$t_{22}(E)$	28	#5	13'-4"	
	$t_{23}(E)$	28	#7	13'-8"	
	$t_{24}(E)$	8	#5	20'-11"	
	$t_{25}(E)$	8	#7	23'-3"	
	$t_{26}(E)$	32	#5	11'-10"	
	$t_{27}(E)$	32	#7	12'-2"	
	$v_{20}(E)$	58	#5	18'-2"	
	$v_{22}(E)$	107	#4	5'-6"	
	$v_{23}(E)$	107	#4	8'-9"	
	$v_{24}(E)$	103	#4	3'-6"	
**	$v_{25}(E)$	103	#5	9'-10"	
	$v_{26}(E)$	103	#5	3'-6"	
	$v_{27}(E)$	103	#5	7'-0"	
	$v_{28}(E)$	7	#5	12'-3"	
	$v_{29}(E)$	8	#6	11'-9"	
	$v_{30}(E)$	38	#5	18'-8"	
	$v_{31}(E)$	50	#6	17'-0"	
	$v_{32}(E)$	26	#6	9'-9"	
	$v_{33}(E)$	42	#6	17'-0"	
	$v_{34}(E)$	12	#5	10'-8"	
	$v_{36}(E)$	32	#5	3'-8"	
	$v_{37}(E)$	36	#5	10'-4"	
	$v_{38}(E)$	30	#5	8'-4"	
	$v_{39}(E)$	18	#5	18'-3"	
	$w_{20}(E)$	36	#6	27'-8"	
	$w_{21}(E)$	36	#6	24'-0"	
	$w_{22}(E)$	18	#5	12'-2"	
	$w_{23}(E)$	20	#5	13'-3"	

Item	Unit	Quantity
Granular Backfill for Structures	Cu. Yd.	547
Braced Excavation	Cu. Yd.	1,094
High Performance Concrete Structures	Cu. Yd.	503.5
Reinforcement Bars, Epoxy Coated	Pound	31,880
Permanent Sheet Piling	Sq. Ft.	300
Concrete Sealer	Sq. Ft.	2,344
Geocomposite Wall Drain	Sq. Yd.	251
Pipe Underdrain for Structures 4"	Foot	175
Micropile Load Test	Each	1
Micro-piles	Each	52
Micropile Proof Load Test	Each	3
Stone Riprap, Class A5	Sq. Yd.	300
Filter Fabric	Sq. Yd.	300

DESIGN:	SF			
DRAWN:	MTR			
CHECKED:	DF			
APPROVED:	DF			
DATE:	11/29/2017			
SCALE:				
FILE:	NO.	BY	DATE	DESCRIPTION
	REVISIONS			

KEY PLAN:

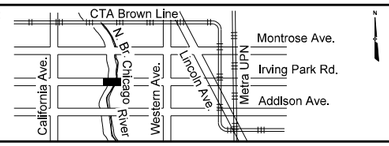

CDOT
CHICAGO DEPARTMENT OF TRANSPORTATION

BOWMAN, BARRETT & ASSOCIATES INC.
CONSULTING ENGINEERS
Chicago, Illinois
312.228.0100
www.bbandainc.com

W. IRVING PARK ROAD AT NORTH BRANCH CHICAGO RIVER

WEST ABUTMENT SECTIONS AND DETAILS III
STRUCTURE NO. 016-6090

PROJECT NO. E-5-038
DRAWING NO. S-47
CONTRACT NO. XXXXX

...\0166090-E5038-044-WA07.dgn
11/29/2017 1:47:45 PM

TOTAL SHEETS	SHEET NO.
184	148

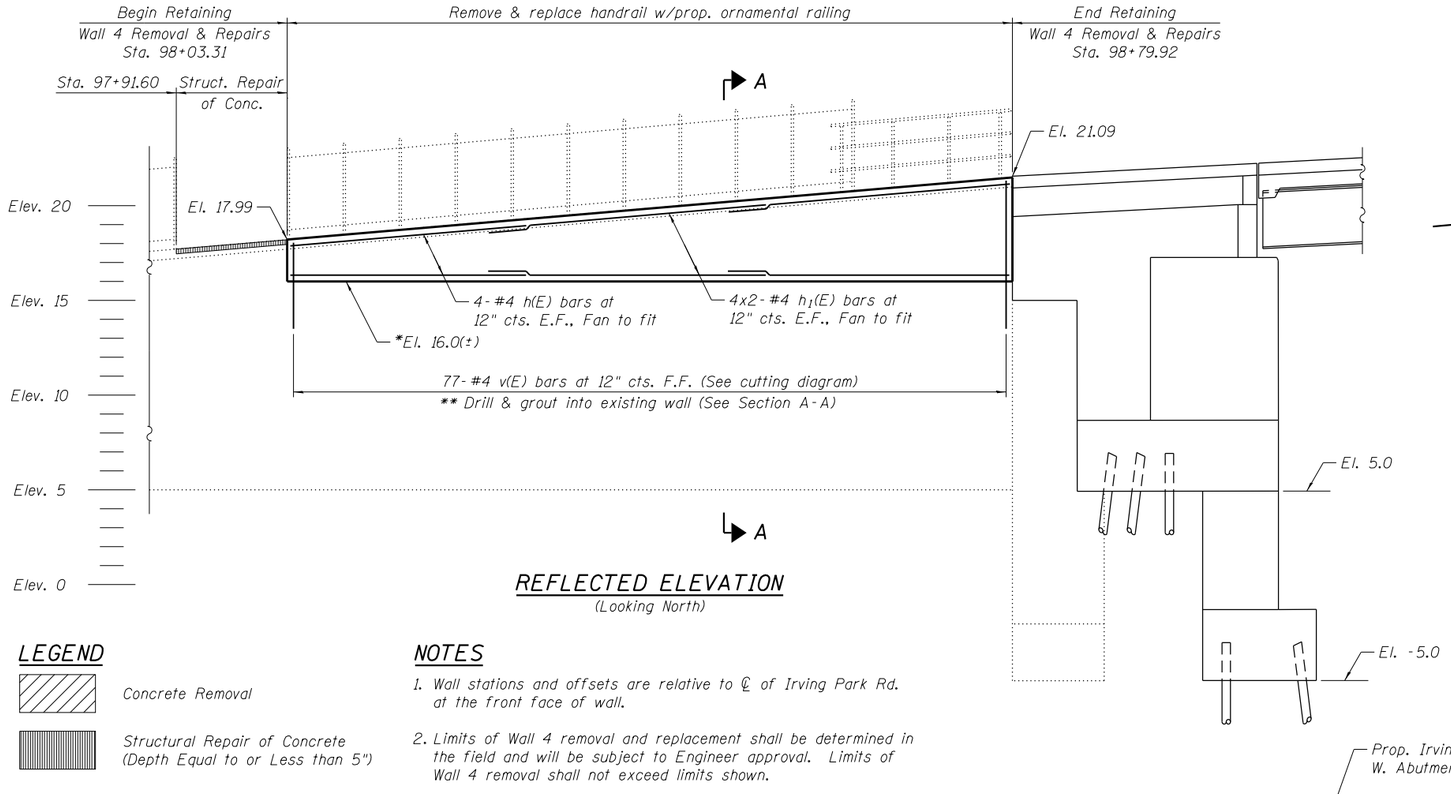

REFLECTED ELEVATION
(Looking North)

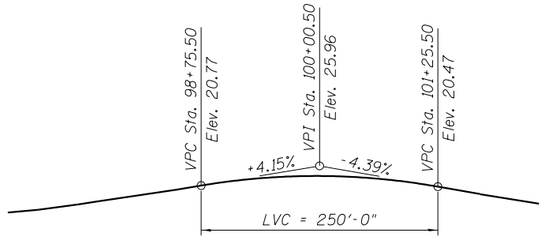

PROFILE GRADE
(6' Offset from ℄ IL Rte. 19 Irving Park Rd.)

BILL OF MATERIAL

Bar	No.	Size	Length	Shape
h(E)	8	#4	25'-5"	———
h_1(E)	16	#4	28'-0"	———
v(E)	77	#4	8'-3"	———
Concrete Removal			Cu. Yd.	17
Structural Repair of Concrete (Depth Equal to or Less than 5")			Sq. Ft.	18
Concrete Structures (Retaining Wall)			Cu. Yd.	16
Reinforcement Bars, Epoxy Coated			Pound	860
Structure Excavation			Cu. Yd.	64
Handrail Removal			Foot	77

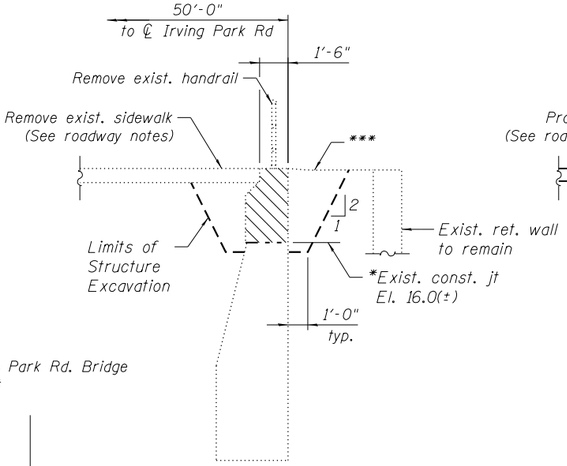

SECTION A-A
(Showing Removals)

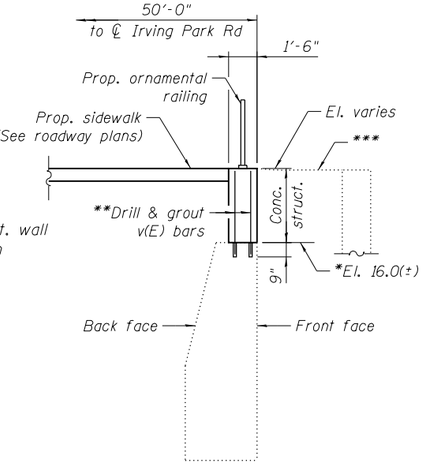

SECTION A-A
(Showing Proposed Work)

* Contractor shall verify elevation of existing construction joint in field and shall remove wall down to that elevation along the entire length to be repaired.

** Drilling and epoxy grouting in accordance with Article 584 of the Standard Specifications. Cost included with Reinforcement Bars, Epoxy Coated.

*** Contractor shall restore area to existing conditions between walls. Cost included with Structure Excavation.

LEGEND

Concrete Removal

Structural Repair of Concrete (Depth Equal to or Less than 5")

NOTES

1. Wall stations and offsets are relative to ℄ of Irving Park Rd. at the front face of wall.
2. Limits of Wall 4 removal and replacement shall be determined in the field and will be subject to Engineer approval. Limits of Wall 4 removal shall not exceed limits shown.
3. See sheet S-16 for details of proposed ornamental hand railing.

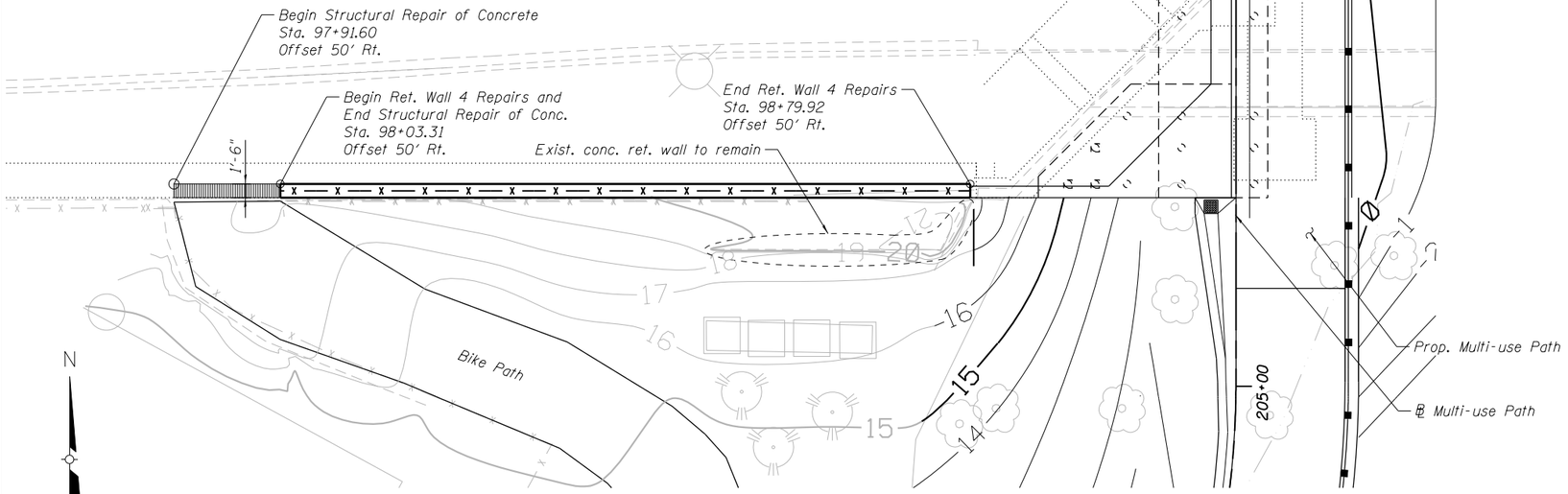

PLAN

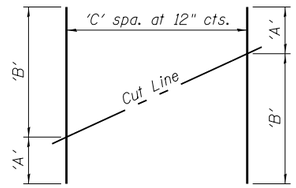

TABLE OF DIMENSIONS

Bar	'A'	'B'	'C'
v(E)	2'-7"	5'-8"	76

BAR CUTTING DIAGRAM
Order bars full length. Cut as shown and use remainder of bars at 12" cts. back face.

DESIGN:				
DRAWN:				
CHECKED:				
APPROVED: DF				
DATE: 11/29/2017				
SCALE:				
FILE:	NO.	BY	DATE	DESCRIPTION
	REVISIONS			

KEY PLAN:

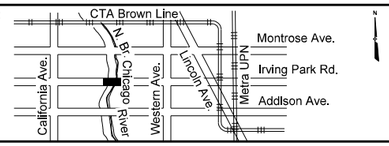

CDOT
CHICAGO DEPARTMENT OF TRANSPORTATION

BOWMAN, BARRETT & ASSOCIATES INC.
CONSULTING ENGINEERS
Chicago, Illinois
312.228.0100
www.bbandainc.com

W. IRVING PARK ROAD AT NORTH BRANCH CHICAGO RIVER

SW WINGWALL REPAIR DETAILS
STRUCTURE NO. 016-6090

PROJECT NO.	E-5-038
DRAWING NO.	S-48
CONTRACT NO.	XXXXX

...\RW4-E5038-001-GPE.dgn
11/29/2017 1:47:48 PM

TOTAL SHEETS	SHEET NO.
184	149

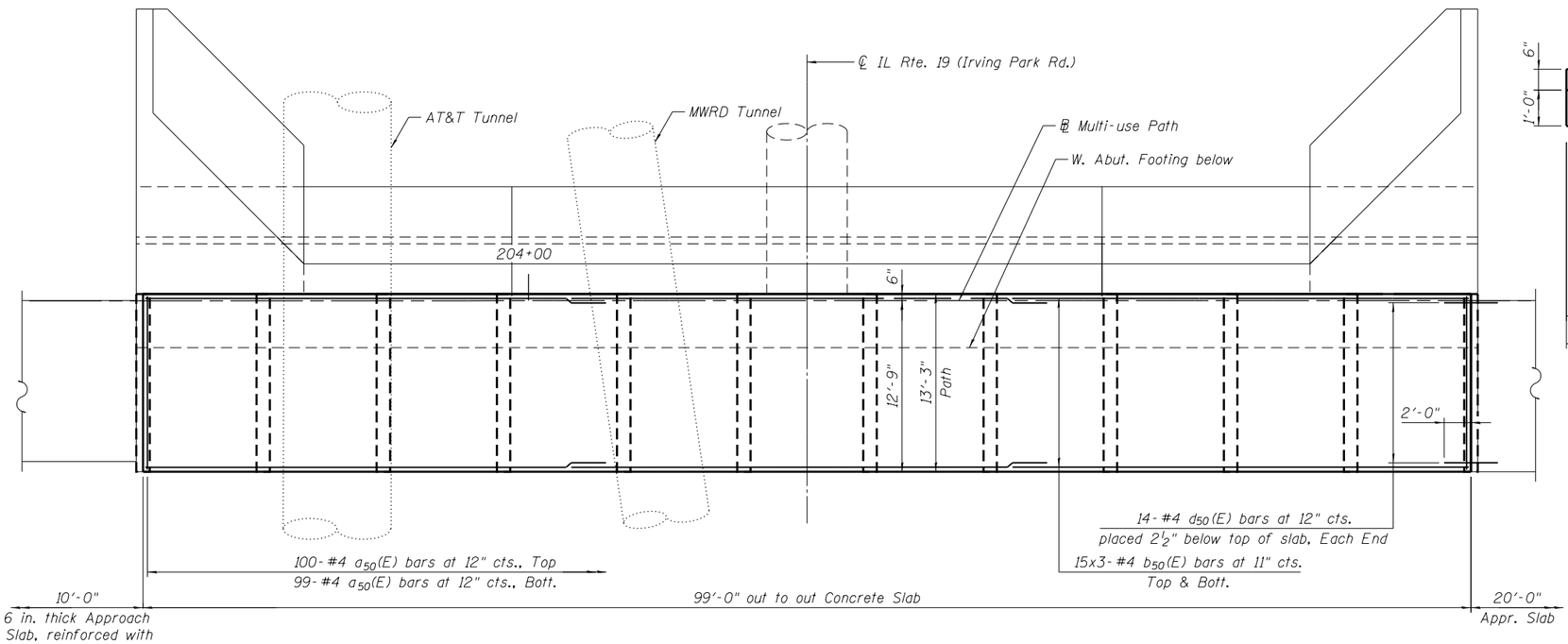

PLAN N

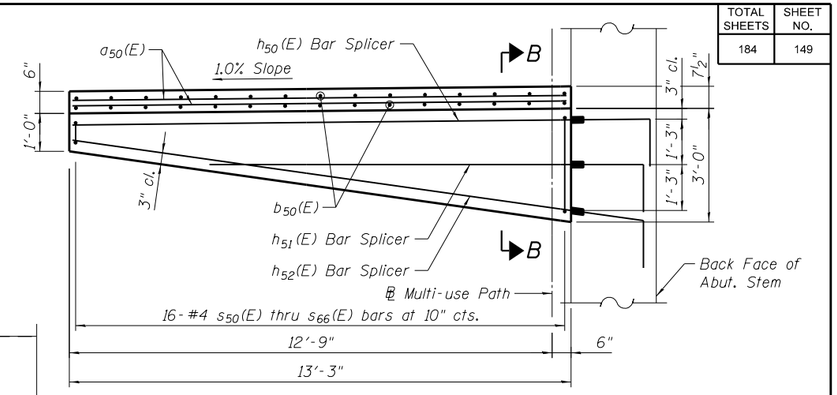

SECTION A-A

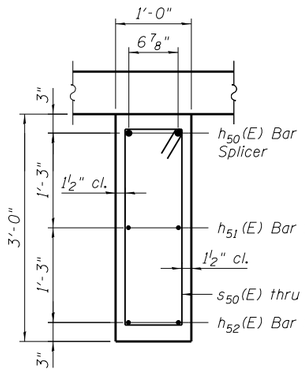

SECTION B-B

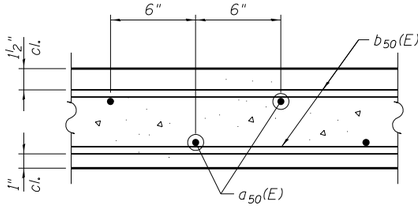

DETAIL 1

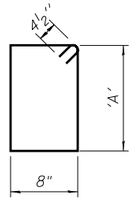

BAR s50(E) thru s66(E)

Bar	'A'
s_{50}(E)	2'-7½"
s_{51}(E)	2'-6"
s_{52}(E)	2'-4½"
s_{53}(E)	2'-3"
s_{54}(E)	2'1½"
s_{55}(E)	2'-0"
s_{56}(E)	1'-10½"
s_{57}(E)	1'-9"
s_{58}(E)	1'-7½"
s_{59}(E)	1'-6"
s_{60}(E)	1'-4½"
s_{61}(E)	1'-3"
s_{62}(E)	1'-1½"
s_{63}(E)	1'-0"
s_{64}(E)	10½"
s_{65}(E)	9"
s_{66}(E)	7½"

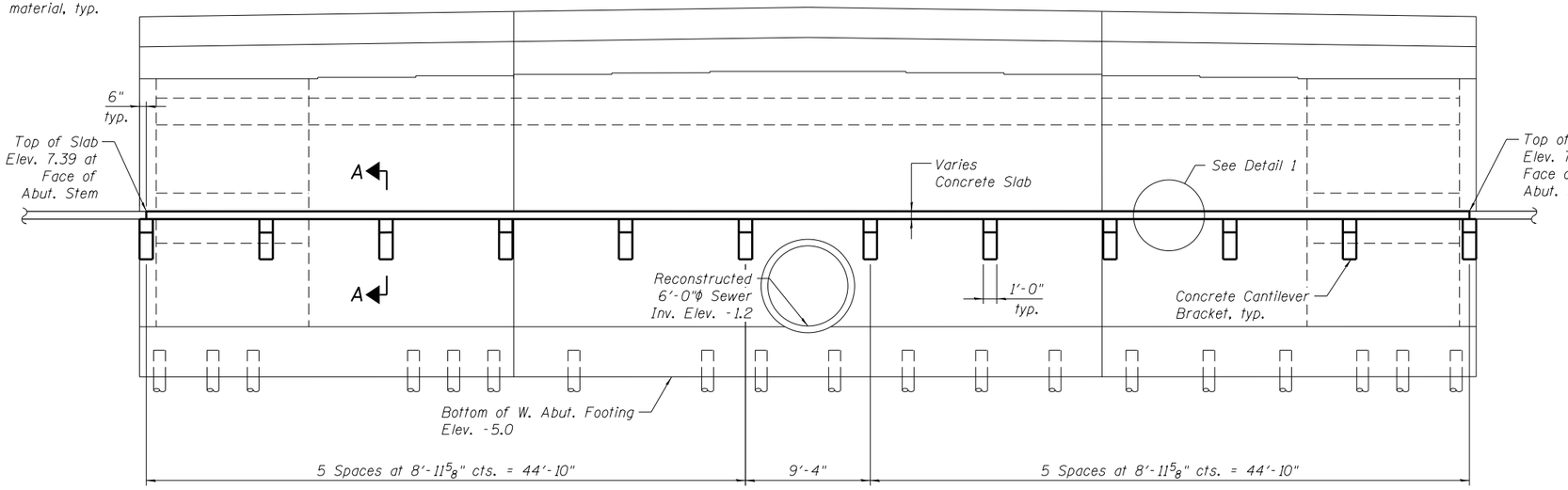

ELEVATION
(Looking West)

Notes:

See W. Abutment Bill of Material on Drawing No. S-47 for bars h_{50}(E), h_{51}(E) and h_{52}(E).

MULTI-USE PATH
BILL OF MATERIAL

Bar	No.	Size	Length	Shape
a_{50}(E)	199	#4	12'-11"	———
b_{50}(E)	90	#4	34'-8"	———
d_{50}(E)	28	#4	4'-0"	———
s_{50}(E)	12	#4	7'-4"	□
s_{51}(E)	12	#4	7'-1"	□
s_{52}(E)	12	#4	6'-10"	□
s_{53}(E)	12	#4	6'-7"	□
s_{54}(E)	12	#4	6'-4"	□
s_{55}(E)	12	#4	6'-1"	□
s_{56}(E)	12	#4	5'-10"	□
s_{57}(E)	12	#4	5'-7"	□
s_{58}(E)	12	#4	5'-4"	□
s_{59}(E)	12	#4	5'-1"	□
s_{60}(E)	12	#4	4'-10"	□
s_{61}(E)	12	#4	4'-7"	□
s_{62}(E)	12	#4	4'-4"	□
s_{63}(E)	12	#4	4'-1"	□
s_{64}(E)	12	#4	3'-10"	□
s_{65}(E)	12	#4	3'-7"	□
s_{66}(E)	12	#4	3'-4"	□

Item	Unit	Quantity
High Performance Concrete Structures	Cu. Yd.	39.2
Protective Concrete Sealer	Sq. Yd.	146
Reinforcement Bars, Epoxy Coated	Pound	4,610

DESIGN: SF				
DRAWN: MTR				
CHECKED: DF				
APPROVED: DF				
DATE: 11/29/2017				
SCALE:				
FILE:	NO.	BY	DATE	DESCRIPTION
	REVISIONS			

KEY PLAN:

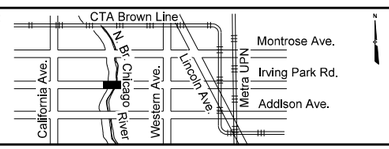

CDOT
CHICAGO DEPARTMENT OF TRANSPORTATION

BOWMAN, BARRETT & ASSOCIATES INC.
CONSULTING ENGINEERS
Chicago, Illinois
312.228.0100
www.bbandainc.com

W. IRVING PARK ROAD AT NORTH BRANCH CHICAGO RIVER

MULTI-USE PATH DETAILS
STRUCTURE NO. 016-6090

PROJECT NO. E-5-038
DRAWING NO. S-49
CONTRACT NO. XXXXX

...\0166090-E5038-046-MU01.dgn
11/29/2017 1:47:51 PM

TOTAL SHEETS	SHEET NO.
184	150

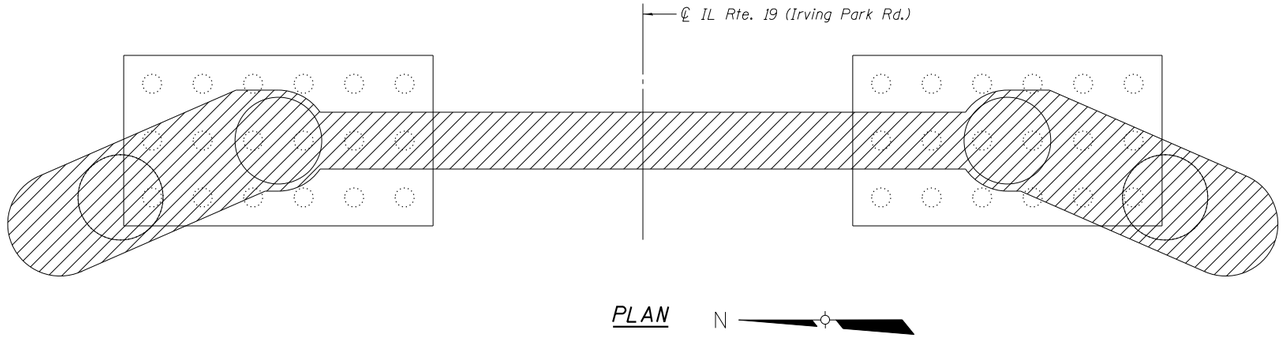

PLAN N

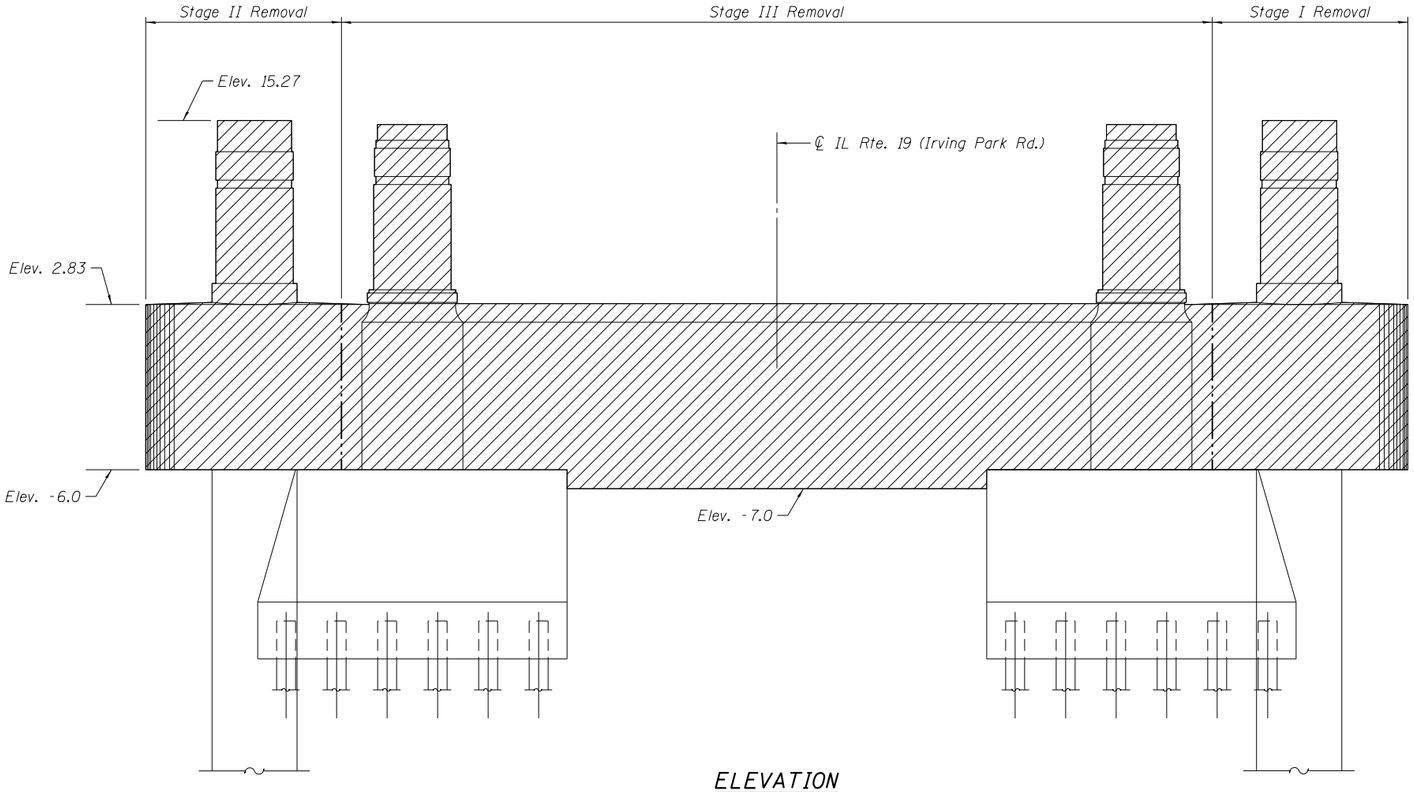

ELEVATION
(Looking East)

A

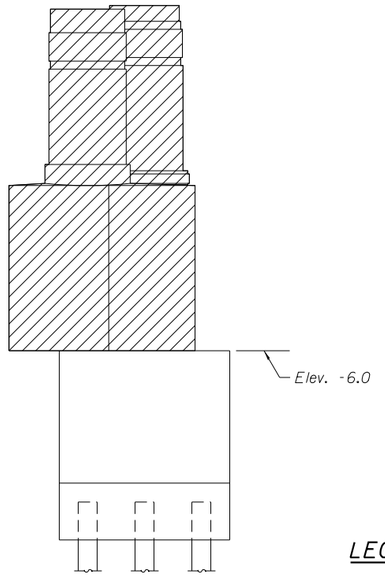

VIEW A-A

A

LEGEND

Concrete Removal

Notes:

Concrete Removal is included with the cost of Removal of Existing Structures.

DESIGN: SF				
DRAWN: MTR				
CHECKED: DF				
APPROVED: DF				
DATE: 11/29/2017				
SCALE:				
FILE:	NO.	BY	DATE	DESCRIPTION
	REVISIONS			

KEY PLAN:

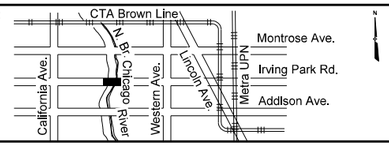

CDOT
CHICAGO DEPARTMENT OF TRANSPORTATION

BOWMAN, BARRETT & ASSOCIATES INC.
CONSULTING ENGINEERS
Chicago, Illinois
312.228.0100
www.bbandainc.com

W. IRVING PARK ROAD AT NORTH BRANCH CHICAGO RIVER

PIER 1 & 2 REMOVAL DETAILS STRUCTURE NO. 016-6090

PROJECT NO.	E-5-038
DRAWING NO.	S-50
CONTRACT NO.	XXXXX

...\0166090-E5038-047-RD03.dgn
11/29/2017 1:47:53 PM

TOTAL SHEETS	SHEET NO.
184	151

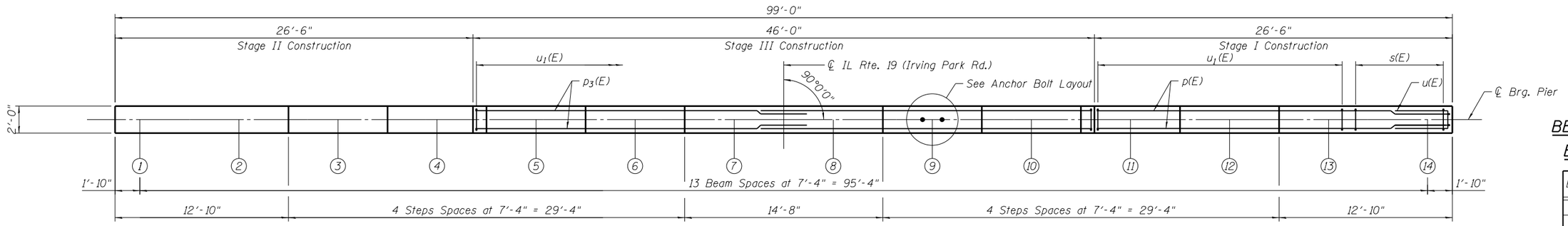

TOP PLAN

N

BEARING SEAT ELEVATIONS

Beam	Brg. Seat Elevation
1	17.80
2	17.80
3	17.90
4	18.01
5	18.12
6	18.23
7	18.34
8	18.34
9	18.23
10	18.12
11	18.01
12	17.90
13	17.80
14	17.80

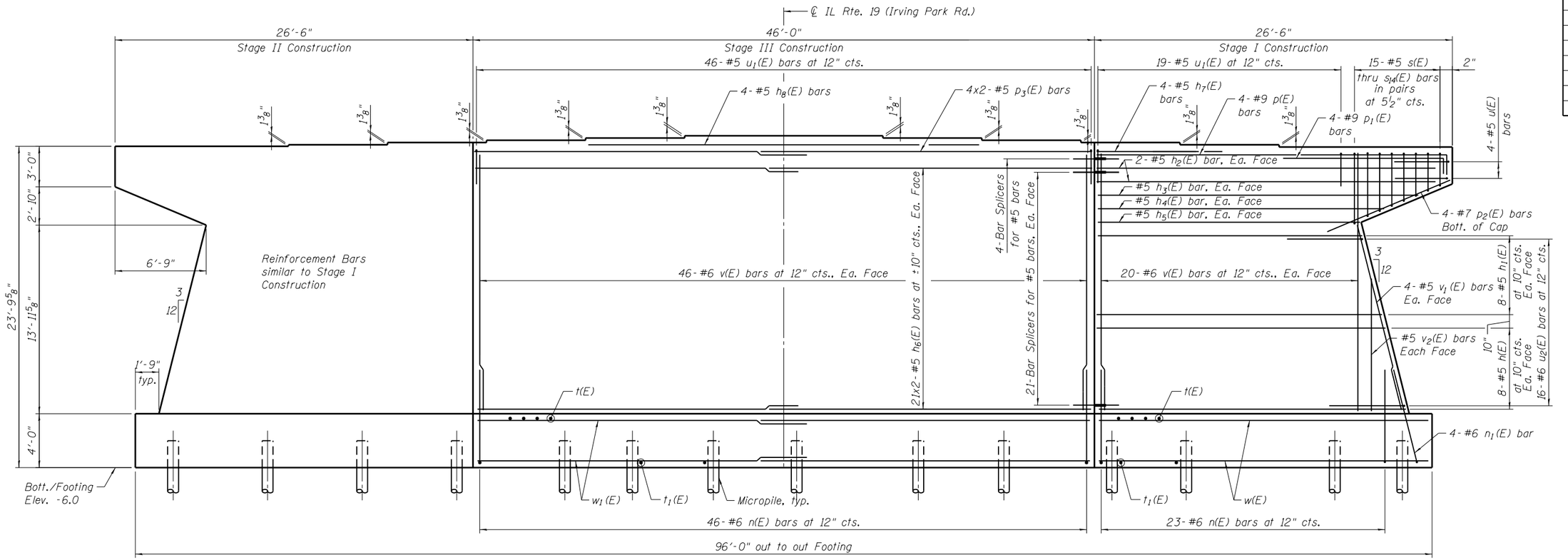

ELEVATION
(Looking East)

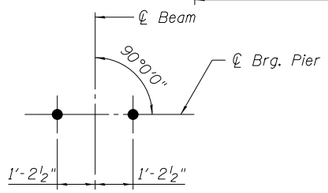

ANCHOR BOLT LAYOUT

MIN. BAR LAP
#5 - 3'-3"

Notes:

1. See Drawing No. S-52 for Footing Plan and Details.
2. See Drawing No. S-55 for Bill of Materials, End View, and Bar Bending Diagrams.
3. Space reinforcements in cap to miss anchor bolts.
4. For Micropile Details see Drawing No. S-56.
5. Bars indicated thus 21x2-#5 etc. indicates 21 lines of bars with 2 lenghts per line.

DESIGN: SF				
DRAWN: MTR				
CHECKED: DF				
APPROVED: DF				
DATE: 11/29/2017				
SCALE:				
FILE:	NO.	BY	DATE	DESCRIPTION
	REVISIONS			

KEY PLAN:

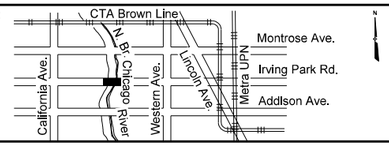

CDOT
CHICAGO DEPARTMENT OF TRANSPORTATION

BOWMAN, BARRETT & ASSOCIATES INC.
CONSULTING ENGINEERS
Chicago, Illinois
312.228.0100
www.bbandainc.com

W. IRVING PARK ROAD AT NORTH BRANCH CHICAGO RIVER

PIER 1 PLAN AND ELEVATION
STRUCTURE NO. 016-6090

PROJECT NO.
E-5-038
DRAWING NO.
S-51
CONTRACT NO. XXXXX

...\0166090-E5038-048-PD01.dgn
11/29/2017 1:47:56 PM

TOTAL SHEETS	SHEET NO.
184	152

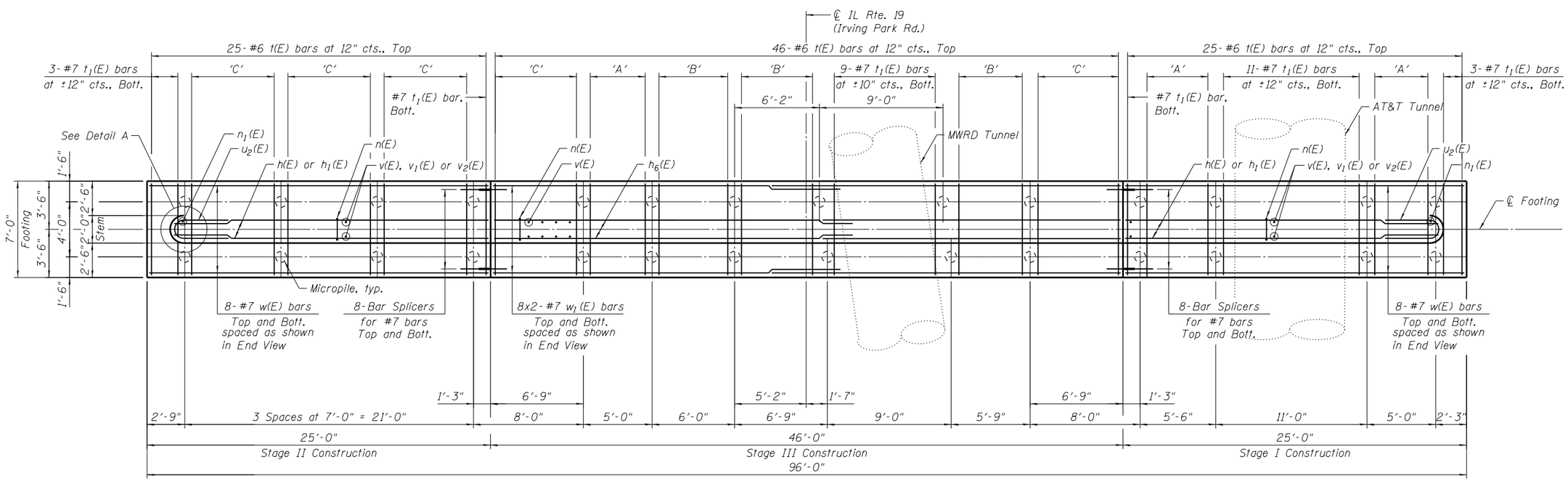

FOOTING PLAN

N

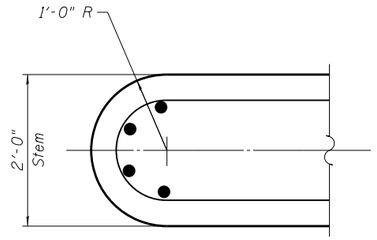

DETAIL A

Notes:

1. 'A' - 5-#7 $t_1(E)$ bars at ±12" cts., Bott.
   'B' - 6-#7 $t_1(E)$ bars at ±12" cts., Bott.
   'C' - 7-#7 $t_1(E)$ bars at ±12" cts., Bott.
2. For Micropile Details see Drawing No. S-56

...\0166090-E5038-049-PD02.dgn
11/29/2017 1:47:58 PM

DESIGN: SF				
DRAWN: MTR				
CHECKED:				
APPROVED: DF				
DATE: 11/29/2017				
SCALE:				
FILE:	NO.	BY	DATE	DESCRIPTION
	REVISIONS			

KEY PLAN:

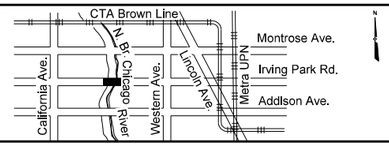

CDOT
CHICAGO DEPARTMENT OF TRANSPORTATION

BOWMAN, BARRETT & ASSOCIATES INC.
CONSULTING ENGINEERS
Chicago, Illinois
312.228.0100
www.bbandainc.com

W. IRVING PARK ROAD AT NORTH BRANCH CHICAGO RIVER

PIER 1 FOOTING PLAN & DETAILS STRUCTURE NO. 016-6090

PROJECT NO.	E-5-038
DRAWING NO.	S-52
CONTRACT NO.	XXXXX

TOTAL SHEETS	SHEET NO.
184	153

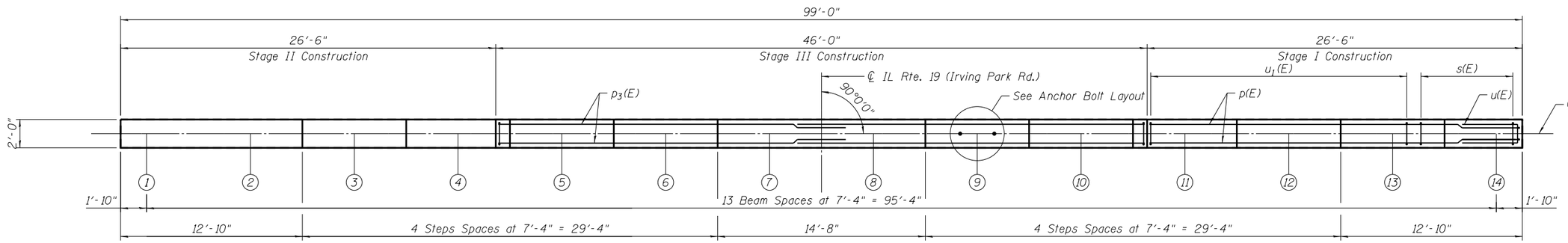

TOP PLAN

N

BEARING SEAT ELEVATIONS

Beam	Brg. Seat Elevation
1	17.71
2	17.71
3	17.82
4	17.93
5	18.04
6	18.15
7	18.26
8	18.26
9	18.15
10	18.04
11	17.93
12	17.82
13	17.71
14	17.71

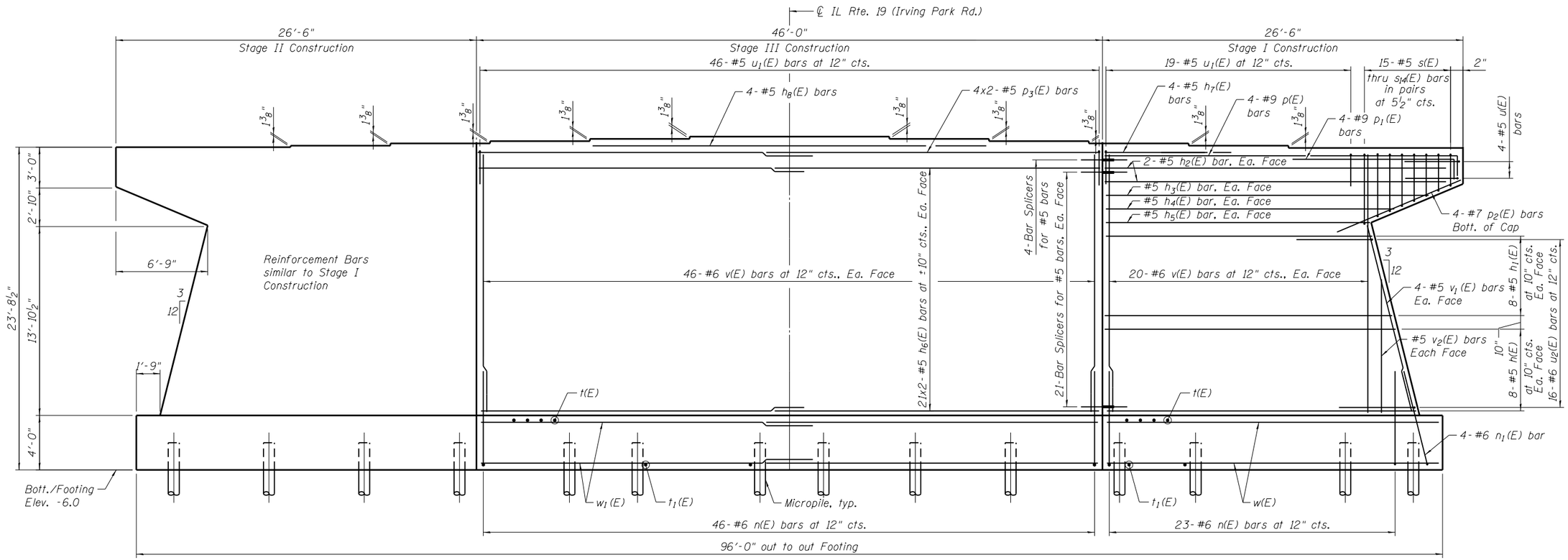

ELEVATION

(Looking East)

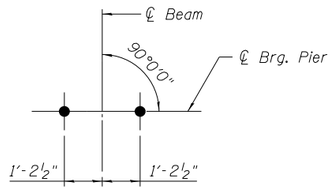

ANCHOR BOLT LAYOUT

MIN. BAR LAP

#5 - 3'-3"

Notes:

1. See Drawing No. S-54 for Footing Plan and Details.
2. See Drawing No. S-55 for Bill of Materials, End View, and Bar Bending Diagrams.
3. Space reinforcements in cap to miss anchor bolts.
4. For Micropile Details see Drawing No. S-56.
5. Bars indicated thus 21x2-#5 etc. indicates 21 lines of bars with 2 lenghts per line.

DESIGN: SF				
DRAWN: MTR				
CHECKED: DF				
APPROVED: DF				
DATE: 11/29/2017				
SCALE:				
FILE:	NO.	BY	DATE	DESCRIPTION
	REVISIONS			

KEY PLAN:

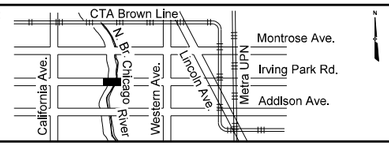

CDOT
CHICAGO DEPARTMENT OF TRANSPORTATION

BOWMAN, BARRETT & ASSOCIATES INC.
CONSULTING ENGINEERS
Chicago, Illinois
312.228.0100
www.bbandainc.com

W. IRVING PARK ROAD AT NORTH BRANCH CHICAGO RIVER

PIER 2 PLAN AND ELEVATION STRUCTURE NO. 016-6090

PROJECT NO.	E-5-038
DRAWING NO.	S-53
CONTRACT NO.	XXXXX

...\0166090-E5038-050-PD03.dgn
11/29/2017 1:48:00 PM

TOTAL SHEETS	SHEET NO.
184	154

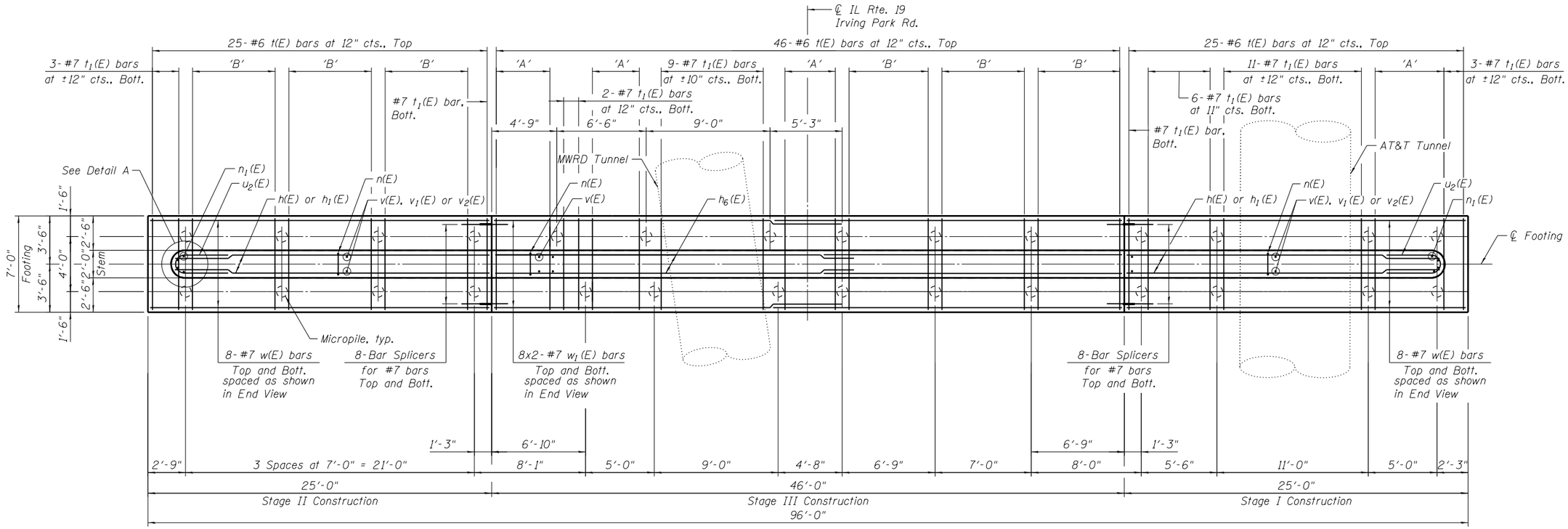

FOOTING PLAN

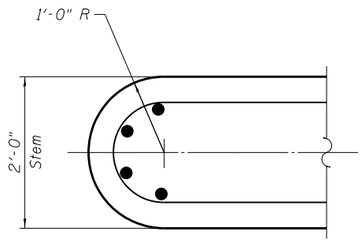

DETAIL A

Notes:

1. 'A' - 5-#7 t_1(E) bars at ±12" cts., Bott.
   'B' - 7-#7 t_1(E) bars at ±12" cts., Bott.
2. For Micropile Details see Drawing No. S-56

DESIGN: SF				
DRAWN: MTR				
CHECKED: DF				
APPROVED: DF				
DATE: 11/29/2017				
SCALE:				
FILE:	NO.	BY	DATE	DESCRIPTION
	REVISIONS			

KEY PLAN:

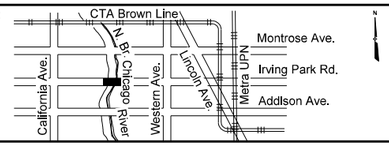

CDOT
CHICAGO DEPARTMENT OF TRANSPORTATION

BOWMAN, BARRETT & ASSOCIATES INC.
CONSULTING ENGINEERS
Chicago, Illinois
312.228.0100
www.bbandainc.com

W. IRVING PARK ROAD AT NORTH BRANCH CHICAGO RIVER

PIER 2 FOOTING PLAN & DETAILS
STRUCTURE NO. 016-6090

PROJECT NO.	E-5-038
DRAWING NO.	S-54
CONTRACT NO.	XXXXX

...\0166090-E5038-051-PD04.dgn
11/29/2017 1:48:03 PM

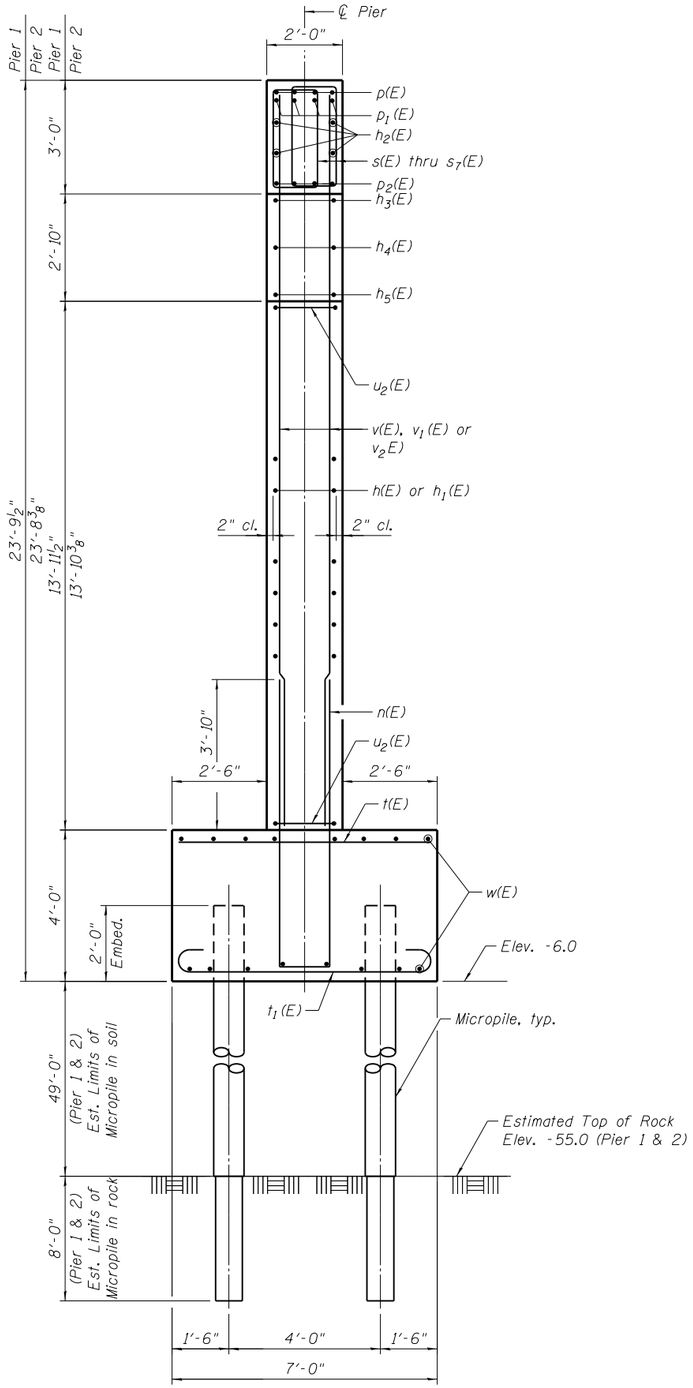

END VIEW

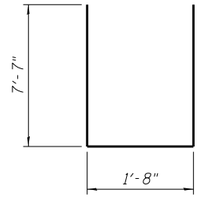

BAR n(E)

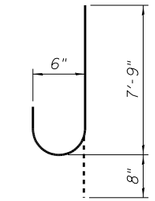

BAR n_1(E)

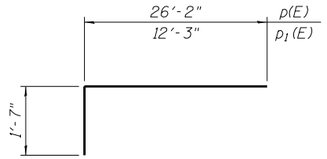

BARS p(E) & p_1(E)

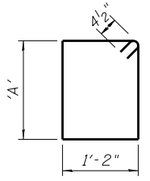

BARS s(E) thru s_7(E)

'A' DIMENSIONS

Bar	'A'
s(E)	5'-5"
s_1(E)	5'-2½"
s_2(E)	5'-0½"
s_3(E)	4'-10"
s_4(E)	4'-8½"
s_5(E)	4'-5½"
s_6(E)	4'-3"
s_7(E)	4'-0½"
s_8(E)	3'-10½"
s_9(E)	3'-8"
s_{10}(E)	3'-6"
s_{11}(E)	3'-3½"
s_{12}(E)	3'-1½"
s_{13}(E)	2'-11"
s_{14}(E)	2'-9"

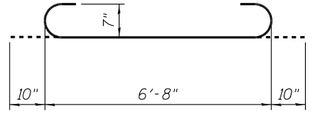

BAR t_1(E)

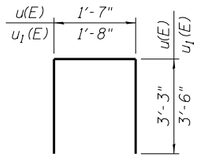

BARS u)E) & u_1(E)

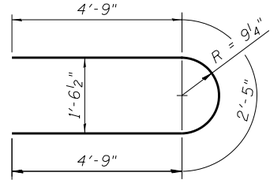

BAR u_2(E)

PIER 1
BILL OF MATERIAL

	Bar	No.	Size	Length	Shape
	h(E)	32	#5	20'-5"	——
	h_1(E)	32	#5	18'-6"	——
	h_2(E)	8	#5	26'-2"	——
	h_3(E)	4	#5	25'-4"	——
	h_4(E)	4	#5	23'-0"	——
	h_5(E)	4	#5	20'-9"	——
	h_6(E)	4	#5	24'-6"	——
	h_7(E)	8	#5	13'-3"	——
	h_8(E)	4	#5	29'-0"	——
	n(E)	92	#6	16'-10"	⊔
	n_1(E)	8	#6	8'-5"	J
	p(E)	8	#9	27'-9"	⌐¬
	p_1(E)	8	#9	13'-10"	⌐¬
	p_2(E)	8	#7	9'-4"	——
*	p_3(E)	8	#5	24'-6"	——
	s(E)	4	#5	13'-11"	□
	s_1(E)	4	#5	13'-6"	□
	s_2(E)	4	#5	13'-2"	□
	s_3(E)	4	#5	12'-9"	□
	s_4(E)	4	#5	12'-4"	□
	s_5(E)	4	#5	12'-0"	□
	s_6(E)	4	#5	11'-7"	□
	s_7(E)	4	#5	11'-2"	□
	s_8(E)	4	#5	10'-10"	□
	s_9(E)	4	#5	10'-5"	□
	s_{10}(E)	4	#5	10'-1"	□
	s_{11}(E)	4	#5	9'-8"	□
	s_{12}(E)	4	#5	9'-4"	□
	s_{13}(E)	4	#5	8'-11"	□
	s_{14}(E)	4	#5	8'-7"	□
	t(E)	96	#6	6'-8"	——
	t_1(E)	96	#7	8'-4"	⊂⊃
	u(E)	8	#5	8'-1"	⊐
	u_1(E)	84	#5	8'-8"	⊓
	u_2(E)	32	#6	11'-11"	⊃
	v(E)	172	#6	19'-3"	——
	v_1(E)	8	#5	16'-3"	——
	v_2(E)	4	#5	8'-0"	——
	w(E)	32	#7	24'-8"	——
	w_1(E)	32	#7	25'-5"	——
	Cofferdam Excavation		Cu. Yd.	246.5	
	High Performance Concrete Structures		Cu. Yd.	237.0	
	Reinforcement Bars, Epoxy Coated		Pound	18,970	
	Micro-piles		Each	28	
	Micropile Load Test		Each	1	
	Micropile Proof Load Test		Each	3	
	Concrete Sealer		Sq. Ft.	3,886	
	Cofferdam (Type I) (Location - 1)		Each	1	

PIER 2
BILL OF MATERIAL

	Bar	No.	Size	Length	Shape
	h(E)	32	#5	20'-5"	——
	h_1(E)	32	#5	18'-6"	——
	h_2(E)	8	#5	26'-2"	——
	h_3(E)	4	#5	25'-4"	——
	h_4(E)	4	#5	23'-0"	——
	h_5(E)	4	#5	20'-9"	——
	h_6(E)	4	#5	24'-6"	——
	h_7(E)	8	#5	13'-3"	——
	h_8(E)	4	#5	29'-0"	——
	n(E)	92	#6	16'-10"	⊔
	n_1(E)	8	#6	8'-5"	J
	p(E)	8	#9	27'-9"	⌐¬
	p_1(E)	8	#9	13'-10"	⌐¬
	p_2(E)	8	#7	9'-4"	——
*	p_3(E)	8	#5	24'-6"	——
	s(E)	4	#5	13'-11"	□
	s_1(E)	4	#5	13'-6"	□
	s_2(E)	4	#5	13'-2"	□
	s_3(E)	4	#5	12'-9"	□
	s_4(E)	4	#5	12'-4"	□
	s_5(E)	4	#5	12'-0"	□
	s_6(E)	4	#5	11'-7"	□
	s_7(E)	4	#5	11'-2"	□
	s_8(E)	4	#5	10'-10"	□
	s_9(E)	4	#5	10'-5"	□
	s_{10}(E)	4	#5	10'-1"	□
	s_{11}(E)	4	#5	9'-8"	□
	s_{12}(E)	4	#5	9'-4"	□
	s_{13}(E)	4	#5	8'-11"	□
	s_{14}(E)	4	#5	8'-7"	□
	t(E)	96	#6	6'-8"	——
	t_1(E)	97	#7	8'-4"	⊂⊃
	u(E)	8	#5	8'-1"	⊐
	u_1(E)	84	#5	8'-8"	⊓
	u_2(E)	32	#6	11'-11"	⊃
	v(E)	172	#6	19'-3"	——
	v_1(E)	8	#5	16'-3"	——
	v_2(E)	4	#5	8'-0"	——
	w(E)	32	#7	24'-8"	——
	w_1(E)	32	#7	25'-5"	——
	Cofferdam Excavation		Cu. Yd.	246.5	
	High Performance Concrete Structures		Cu. Yd.	236.0	
	Reinforcement Bars, Epoxy Coated		Pound	18,990	
	Micro-piles		Each	28	
	Micropile Load Test		Each	1	
	Micropile Proof Load Test		Each	3	
	Concrete Sealer		Sq. Ft.	3,870	
	Cofferdam (Type I) (Location - 2)		Each	1	

* Bar p_3(E) shall be furnished by bar splicer supplier and cost included in the contract unit price for Bar Splicers. See Drawing No. S-57 for bar splicer assembly details.

TOTAL SHEETS	SHEET NO.
184	155

DESIGN: SF				
DRAWN: MTR				
CHECKED: DF				
APPROVED: DF				
DATE: 11/29/2017				
SCALE:				
FILE:	NO.	BY	DATE	DESCRIPTION
	REVISIONS			

KEY PLAN:

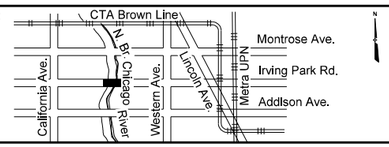

CHICAGO DEPARTMENT OF TRANSPORTATION

BOWMAN, BARRETT & ASSOCIATES INC.
CONSULTING ENGINEERS
Chicago, Illinois
312.228.0100
www.bbandainc.com

W. IRVING PARK ROAD AT NORTH BRANCH CHICAGO RIVER

PIER 1 & 2 DETAILS
STRUCTURE NO. 016-6090

PROJECT NO. E-5-038
DRAWING NO. S-55
CONTRACT NO. XXXXX

...\0166090-E5038-052-PD05.dgn
11/29/2017 1:48:05 PM

TOTAL SHEETS	SHEET NO.
184	156

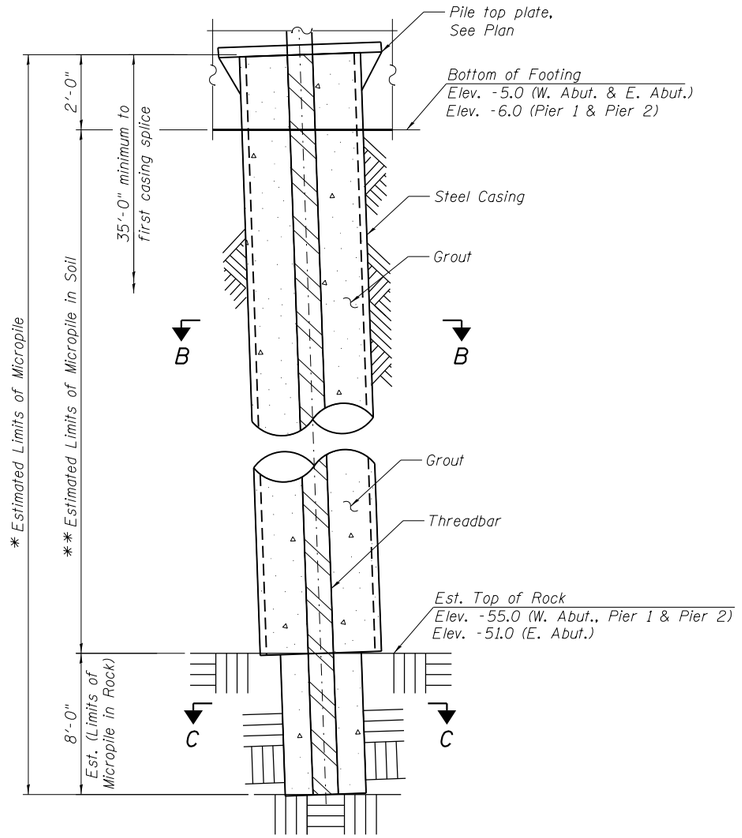

ELEVATION

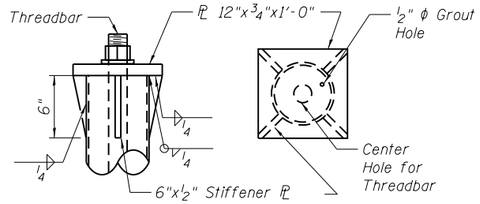

DETAIL 1

Contractor May Substitute an Alternate Plate Detail as Approved by the Engineer.

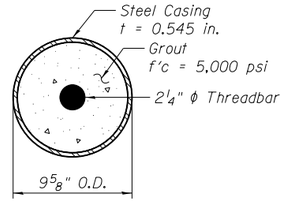

SECTION B-B

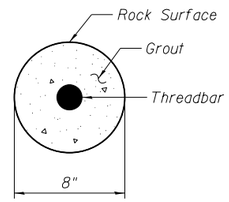

SECTION C-C

DESIGN STRESSES

FIELD UNITS

Micropile Casing Fy = 60 ksi
Longitudinal Reinforcement Micropile Threadbar Fu = 150 ksi
Micropile Grout f'c = 5000 psi

Notes:
Top Plate required for piles shown thus: ◯
Total no. of Piles requiring Top Plate = 6
Cost included with Micropile

MICROPILE SCHEDULE

		W. Abut.	Pier 1	Pier 2	E. Abut.
No. of Production Piles	Each	52	28	28	46
Service Compressive Load	Kips	127	147	147	118
Factored Compressive Load	Kips	171	202	202	152

* 56'-0" (E. Abutment)
60'-0" (W. Abutment)
59'-0" (Pier 1 & Pier 2)

** 46'-0" (E. Abutment)
50'-0" (W. Abutment)
49'-0" (Pier 1 & Pier 2)

...\0166090-E5038-053-MD.dgn
11/29/2017 1:48:07 PM

DESIGN: SF				
DRAWN: MTR				
CHECKED: DF				
APPROVED: DF				
DATE: 11/29/2017				
SCALE:				
FILE:	NO.	BY	DATE	DESCRIPTION
	REVISIONS			

KEY PLAN:

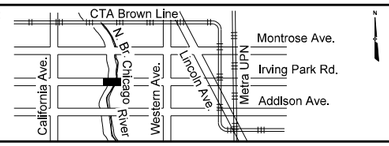

CDOT
CHICAGO DEPARTMENT OF TRANSPORTATION

BOWMAN, BARRETT & ASSOCIATES INC.
CONSULTING ENGINEERS
Chicago, Illinois
312.228.0100
www.bbandainc.com

W. IRVING PARK ROAD AT NORTH BRANCH CHICAGO RIVER

MICROPILE DETAILS
STRUCTURE NO. 016-6090

PROJECT NO. E-5-038
DRAWING NO. S-56
CONTRACT NO. XXXXX

TOTAL SHEETS	SHEET NO.
184	157

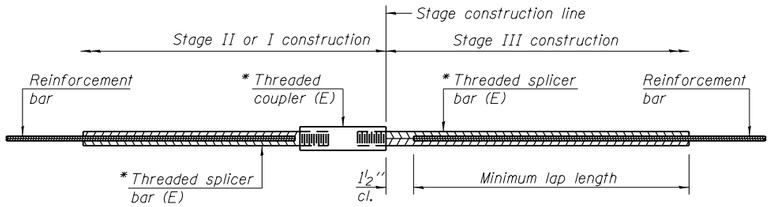

STANDARD BAR SPLICER ASSEMBLY

Threaded splicer bar length = min. lap length + 1½" + thread length

* Epoxy not required on Bar Splicer Assembly components used in conjunction with black bars.

Location	Bar size	No. assemblies required	Minimum lap length
Deck	#5	1,324	3'-6"
Deck Edge Beam	#5	20	3'-6"
Approach Slab	#4	80	2'-5"
Approach Slab	#5	152	3'-6"
Approach Footing	#5	160	3'-6"
W. Abut.	#5	104	3'-3"
	#6	44	3'-10"
E. Abut.	#5	96	3'-3"
	#6	44	3'-10"
Pier 1	#5	92	3'-6"
	#7	32	5'-2"
Pier 2	#5	92	3'-6"
	#7	32	5'-2"

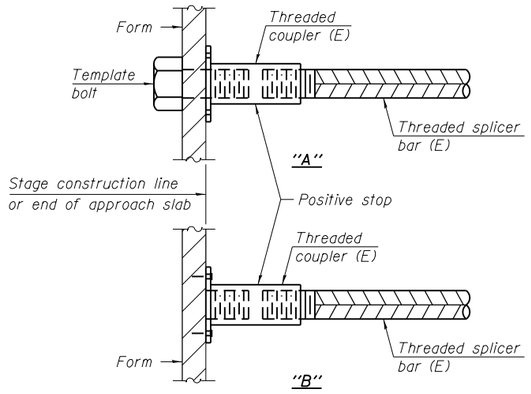

INSTALLATION AND SETTING METHODS

"A" : Set bar splicer assembly by means of a template bolt.
"B" : Set bar splicer assembly by nailing to wood forms or cementing to steel forms.
(E) : Indicates epoxy coating.

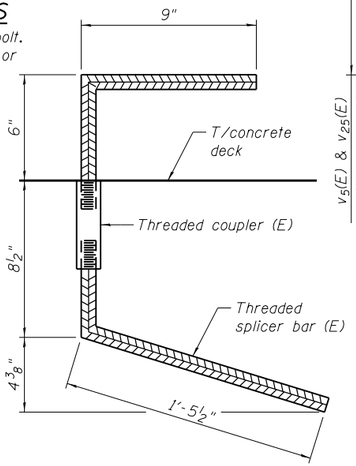

BAR SPLICER ASSEMBLY FOR #5 c2(E) BAR

No. required = 378

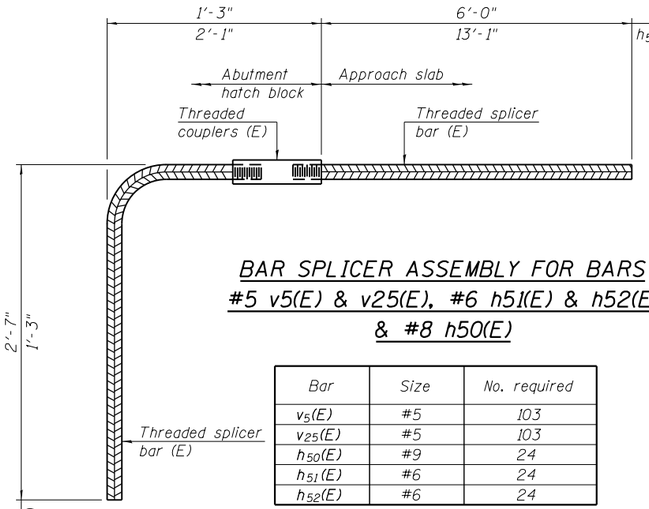

BAR SPLICER ASSEMBLY FOR BARS #5 v5(E) & v25(E), #6 h51(E) & h52(E) & #8 h50(E)

Bar	Size	No. required
$v_5(E)$	#5	103
$v_{25}(E)$	#5	103
$h_{50}(E)$	#9	24
$h_{51}(E)$	#6	24
$h_{52}(E)$	#6	24

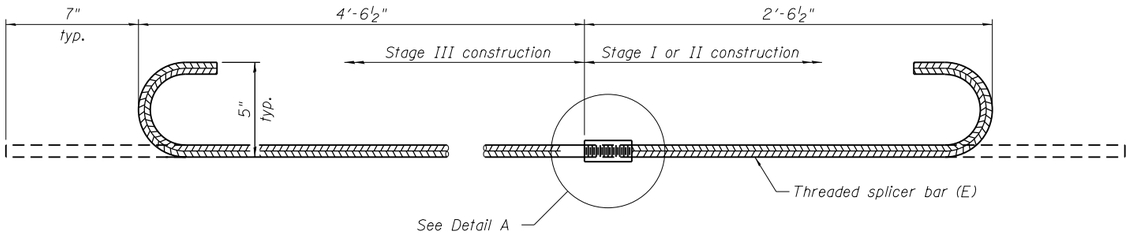

#5 a5(E) BAR SPLICER ASSEMBLY FOR EDGE BEAMS AT STAGE CONSTRUCTION JOINT

No. required = 12

** The bar splicer assembly shall allow completion of the splice without turning of the hook bars. The Stage III splice bar shall be threaded such that the entire coupler can be threaded onto the splice bar.

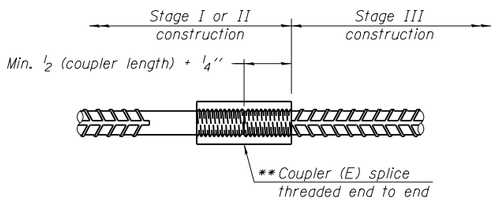

DETAIL A

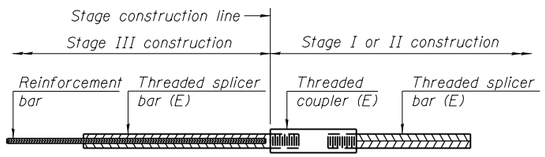

BAR SPLICER ASSEMBLY FOR #5 p3(E) BAR

No. required = 16

NOTES

Splicer bars shall be deformed with threaded ends and have a minimum 60 ksi yield strength.

All reinforcement shall be lapped and tied to the splicer bars.

Bar splicer assemblies shall be epoxy coated according to the requirements for reinforcement bars. See Section 508 of the Standard Specifications.

See IDOT approved list of bar splicer assemblies and mechanical splicers for alternatives.

DESIGN: DF				
DRAWN: LAM				
CHECKED: DF				
APPROVED: DF				
DATE: 11/29/2017				
SCALE:				
FILE:	NO.	BY	DATE	DESCRIPTION
	REVISIONS			

KEY PLAN:

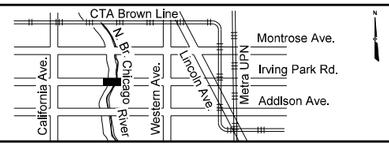

CDOT
CHICAGO DEPARTMENT OF TRANSPORTATION

BOWMAN, BARRETT & ASSOCIATES INC.
CONSULTING ENGINEERS
Chicago, Illinois
312.228.0100
www.bbandainc.com

W. IRVING PARK ROAD AT NORTH BRANCH CHICAGO RIVER

BAR SPLICER ASSEMBLY AND MECHANICAL SPLICER DETAILS
STRUCTURE NO. 016-6090

PROJECT NO. E-5-038
DRAWING NO. S-57
CONTRACT NO. XXXXX

...\0166090-E5038-054-BS.dgn
4/27/2018 3:12:14 PM

TOTAL SHEETS	SHEET NO.
184	158

Wang Engineering, Inc.
Consulting Geotechnical and Environmental Engineers
wangeng@wangeng.com
1145 Main Street
Lombard, IL 60148
Telephone: 630 953-9928
Fax: 630 953-9938

BORING LOG B-01

WEI Job No.: 314-05-01

Client: **Bowman, Barrett & Associates**
Project: **Irving Park Road over N. Chicago River**
Location: **Chicago, IL**

Datum: CCD
Elevation: 22.50 ft
Ncrth: 1926498.80 ft
East: 1157944.75 ft
Station:
Offset:

Profile	Elevation (ft)	SOIL AND ROCK DESCRIPTION	Depth (ft)	Sample Type / recovery	Sample No.	SPT Values (blw/6 in)	Qu (tsf)	Moisture Content (%)
	22.3	3-inch thick ASPHALT						
	21.8	--OVERLAY PAVEMENT--						
		6-inch thick CONCRETE --BRIDGE DECK--						
		--AIR-- --AUGERS HUNG 17.5' THROUGH BRIDGE DECK--	5					
			10					
			15					
	5.0	Stiff, brown and gray SILTY CLAY --3-inch OD Split Spoon Sampler--	20	1	1 1 1 3	1.00 P	24	
	0.8	Stiff, gray SILTY CLAY, trace gravel	25	2	1 2 2	1.07 B	24	
	-4.0		30	3	2 3 4	1.23 B	17	
	-4.5	Loose, gray SILT						
		Stiff to very stiff, gray SILTY CLAY, trace gravel		4	3 3 3	1.80 B	20	
		--A-6 (16)-- LL=36%, PL=16% GRAVEL=5.2% SAND=10.8% SILT=47.6% CLAY=36.4%	35	5	3 3 4	1.80 B	22	
	-13.0			6	3 3 4	2.62 B	22	
		Stiff to very stiff, gray CLAY		7	3 4 7	2.79 B	23	
	-17.3		40	8	1 2 8	1.78 B	23	
	-18.0	Medium dense, gray SILT						
		Hard, gray SILTY CLAY, trace gravel		9	4 7 10	4.84 B	15	
	-20.5							
		Very dense, gray SILTY LOAM	45	10	4 5 7	NP	17	
		--A-4 (0)-- LL=19%, PL=14% GRAVEL=14.7% SAND=33.6% SILT=43.1% CLAY=8.6%		11	3 5 10	NP	10	
			50	12	25 50/4"	NP	10	

GENERAL NOTES

Begin Drilling: **05-08-2009** Complete Drilling: **05-11-2009**
Drilling Contractor: **GTC** Drill Rig: **CME 75 TMR**
Driller: **T & K** Logger: **E. Datz** Checked by: **N. Davis**
Drilling Method: **3.25 IDA HSA; Boring backfilled upon completion**

WATER LEVEL DATA

While Drilling: **66.75 ft**
At Completion of Drilling: **NA**
Time After Drilling: **NA**
Depth to Water: **NA**

The stratification lines represent the approximate boundary between soil types; the actual transition may be gradual.

WANGENGINC 3140501.GPJ WANGENG.GDT 9/29/09

Wang Engineering, Inc.
Consulting Geotechnical and Environmental Engineers
wangeng@wangeng.com
1145 Main Street
Lombard, IL 60148
Telephone: 630 953-9928
Fax: 630 953-9938

BORING LOG B-01

WEI Job No.: 314-05-01

Client: **Bowman, Barrett & Associates**
Project: **Irving Park Road over N. Chicago River**
Location: **Chicago, IL**

Datum: CCD
Elevation: 22.50 ft
North: 1926498.80 ft
East: 1157944.75 ft
Station:
Offset:

Profile	Elevation (ft)	SOIL AND ROCK DESCRIPTION	Depth (ft)	Sample Type / recovery	Sample No.	SPT Values (blw/6 in)	Qu (tsf)	Moisture Content (%)
	-41.0		55	13		18 20 28	NP	10
	-41.5	Limestone cobbles in SILT matrix						
		Very dense, gray SILTY LOAM	60	14		15 16 15	NP	13
	-44.0	Very dense, gray, fine SAND, little gravel	65	15		50/5"	NP	12
	-47.0	Very dense, WEATHERED DOLOSTONE BEDROCK --AUGER REFUSAL @78.25'--	70	16		50/5"	NP	10
			75	17		50/2"	NP	
	-55.8	Fair to good, gray DOLOSTONE --BEDROCK--	80		R 1			
		RUN #1 (78.25' to 83.25') REC=100% RQD=74%						
		RUN #2 (83.25' to 88.25') REC=100% RQD=87%	85		R 2			
	-65.8	Boring terminated at 88.25 ft	90					
			95					
			100					

GENERAL NOTES

Begin Drilling: **05-08-2009** Complete Drilling: **05-11-2009**
Drilling Contractor: **GTC** Drill Rig: **CME 75 TMR**
Driller: **T & K** Logger: **E. Datz** Checked by: **N. Davis**
Drilling Method: **3.25 IDA HSA; Boring backfilled upon completion**

WATER LEVEL DATA

While Drilling: **66.75 ft**
At Completion of Drilling: **NA**
Time After Drilling: **NA**
Depth to Water: **NA**

The stratification lines represent the approximate boundary between soil types; the actual transition may be gradual.

WANGENGINC 3140501.GPJ WANGENG.GDT 9/29/09

...\0166090-E5038-055-SB01.dgn
11/29/2017 1:48:12 PM

DESIGN:				
DRAWN: MTR				
CHECKED:				
APPROVED: DF				
DATE: 11/29/2017				
SCALE:				
FILE:	NO.	BY	DATE	DESCRIPTION
	REVISIONS			

KEY PLAN:

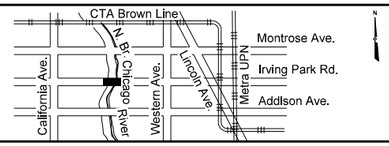

CDOT
CHICAGO DEPARTMENT OF TRANSPORTATION

BOWMAN, BARRETT & ASSOCIATES INC.
CONSULTING ENGINEERS
Chicago, Illinois
312.228.0100
www.bbandainc.com

W. IRVING PARK ROAD AT NORTH BRANCH CHICAGO RIVER

SOIL BORING LOGS I
STRUCTURE NO. 016–6090

PROJECT NO. E-5-038
DRAWING NO. S–58
CONTRACT NO. XXXXX

TOTAL SHEETS	SHEET NO.
184	159

Wang Engineering
wangeng@wangeng.com
1145 N Main Street
Lombard, IL 60148
Telephone: 630 953-9928
Fax: 630 953-9938

BORING LOG B-02

WEI Job No.: 314-05-01

Client: **Bowman, Barrett & Associates**
Project: **Irving Park Road over N. Chicago River**
Location: **Chicago, IL**

Datum: CCD
Elevation: 23.10 ft
North: 1926442.14 ft
East: 1157962.19 ft
Station:
Offset:

Elevation (ft)	Depth (ft)	SOIL AND ROCK DESCRIPTION	Sample Type / recovery	Sample No.	SPT Values (blw/6 in)	Qu (tsf)	Moisture Content (%)
22.9 / 22.4	0	2-inch thick ASPHALT --OVERLAY PAVEMENT-- 7-inch thick CONCRETE --BRIDGE DECK PAVEMENT--					
	5	--AIR-- --AUGERS HUNG 24.5' THROUGH BRIDGE DECK--					
	10						
	15						
	20						
-1.4	25	12-inch thick WATER					
-2.4		--RIVER BANK--					
		Very loose, gray GRAVEL --3-inch OD Split Spoon Sampler--		1	2 1 2 2	NP	19
-3.9		Soft, gray SILTY CLAY					
	30			2	3 2 3	0.25 P	22
-7.9		Stiff, gray CLAY					
				3	2 3 4	1.48 B	23
	35			4	3 4 4	1.56 B	23
		--A-6 (21)-- LL=40%, PL=17% GRAVEL=2.4% SAND=7.5% SILT=45.8% CLAY=44.3%		5	3 4 4	1.56 B	26
-15.4	40	Medium dense, gray fine SAND		6	3 5 5	NP	16
-17.9		Medium dense, gray SILT, trace gravel		7	4 7 9	NP	10
-20.4		Stiff to very stiff, gray SILTY CLAY, trace gravel					
	45			8	4 6 7	3.69 B	16
				9	3 5 7	1.97 B	16
-25.4		Medium dense to very dense, gray SILTY LOAM, trace gravel					
	50			10	6	NP	11

GENERAL NOTES

Begin Drilling: **04-29-2009** Complete Drilling: **04-30-2009**
Drilling Contractor: **GTC** Drill Rig: **CME 75 TMR**
Driller: **T & K** Logger: **F. Bozga** Checked by: **N. Davis**
Drilling Method: **3.25 IDA HSA; Boring backfilled upon completion**

WATER LEVEL DATA

While Drilling: **DRY**
At Completion of Drilling: **DRY**
Time After Drilling: **NA**
Depth to Water: **NA**

The stratification lines represent the approximate boundary between soil types; the actual transition may be gradual.

Wang Engineering
wangeng@wangeng.com
1145 N Main Street
Lombard, IL 60148
Telephone: 630 953-9928
Fax: 630 953-9938

BORING LOG B-02

WEI Job No.: 314-05-01

Client: **Bowman, Barrett & Associates**
Project: **Irving Park Road over N. Chicago River**
Location: **Chicago, IL**

Datum: CCD
Elevation: 23.10 ft
North: 1926442.14 ft
East: 1157962.19 ft
Station:
Offset:

Elevation (ft)	Depth (ft)	SOIL AND ROCK DESCRIPTION	Sample Type / recovery	Sample No.	SPT Values (blw/6 in)	Qu (tsf)	Moisture Content (%)
					8 7		
				11	50/4	NP	9
	55			12	17 24 20	NP	10
		--A-4 (1)-- LL=21%, PL=16% GRAVEL=2.6% SAND=19.2% SILT=61.8% CLAY=16.4%					
	60			13	5 8 11	NP	13
	65			14	21 17 20	NP	19
-44.9		Very dense, WEATHERED DOLOSTONE BEDROCK					
-46.4		--AUGER REFUSAL @ 69.5'--		15	50/2	NP	11
	70	Very poor to poor, gray DOLOSTONE --BEDROCK-- RUN #1 (69.5' to 74.5') REC = 80%-- RQD = 25%--		R 1			
-51.4	75	Boring terminated at 74.50 ft					

GENERAL NOTES

Begin Drilling: **04-29-2009** Complete Drilling: **04-30-2009**
Drilling Contractor: **GTC** Drill Rig: **CME 75 TMR**
Driller: **T & K** Logger: **F. Bozga** Checked by: **N. Davis**
Drilling Method: **3.25 IDA HSA; Boring backfilled upon completion**

WATER LEVEL DATA

While Drilling: **DRY**
At Completion of Drilling: **DRY**
Time After Drilling: **NA**
Depth to Water: **NA**

The stratification lines represent the approximate boundary between soil types; the actual transition may be gradual.

WANGENGINC 3140501.GPJ WANGENG.GDT 6/1/12

...\0166090-E5038-056-SB02.dgn
11/29/2017 1:48:24 PM

DESIGN:				
DRAWN: MTR				
CHECKED:				
APPROVED: DF				
DATE: 11/29/2017				
SCALE:				
FILE:	NO.	BY	DATE	DESCRIPTION
	REVISIONS			

KEY PLAN:

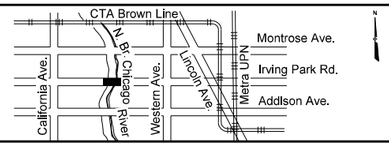

CDOT
CHICAGO DEPARTMENT OF TRANSPORTATION

BOWMAN, BARRETT & ASSOCIATES INC.
CONSULTING ENGINEERS
Chicago, Illinois
312.228.0100
www.bbandainc.com

W. IRVING PARK ROAD AT NORTH BRANCH CHICAGO RIVER

SOIL BORING LOGS II
STRUCTURE NO. 016–6090

PROJECT NO. E-5-038
DRAWING NO. S–59
CONTRACT NO. XXXXX

TOTAL SHEETS	SHEET NO.
184	160

Wang Engineering, Inc.
Consulting Geotechnical and Environmental Engineers
wangeng@wangeng.com
1145 Main Street
Lombard, IL 60148
Telephone: 630 953-9928
Fax: 630 953-9938

BORING LOG B-03

WEI Job No.: 314-05-01

Client: **Bowman, Barrett & Associates**
Project: **Irving Park Road over N. Chicago River**
Location: **Chicago, IL**

Datum: CCD
Elevation: 23.20 ft
Ncrth: 1926500.90 ft
East: 1158075.25 ft
Station:
Offset:

Profile	Elevation (ft)	SOIL AND ROCK DESCRIPTION	Depth (ft)	Sample Type / recovery	Sample No.	SPT Values (blw/6 in)	Qu (tsf)	Moisture Content (%)
	22.9	3.5-inch thick ASPHALT						
	22.4	--OVERLAY PAVEMENT--						
		6-inch thick, CONCRETE --BRIDGE DECK--						
		--AIR-- --AUGERS HUNG 25.5' THROUGH BRIDGE DECK--	5					
			10					
			15					
			20					
	-1.8		25					
	-2.3	6-inch thick, WATER --RIVER BANK--						
		Medium stiff, dark brown SILTY CLAY --3-inch O.D. Split Spoon Sampler--			1	1 2 2 3	0.50 P	17
	-4.8	Stiff, brown and gray SILTY CLAY, trace gravel	30		2	1 2 4	1.15 B	18
			35		3	2 3 3	1.64 B	20
			35		4	3 3 4	1.72 B	20
	-12.3	Stiff to very stiff, brown and gray CLAY, trace gravel --A-6 (17)-- LL=38%, PL=17% GRAVEL=4.7% SAND=12.5% SILT=40.3% CLAY=42.4%			5	3 4 4	1.89 B	23
			40		6	2 2 4	1.56 B	20
			40		7	2 4 6	3.53 B	16
		--A-6 (9)-- LL=30% PL=16% GRAVEL=3.9% SAND=18.4% SILT=47.8% CLAY=29.9%	45		8	3 7 8	3.85 B	15
	-22.3	Medium dense, gray SILT			9	10 12 12	NP	20
	-24.8	Very stiff, dark gray SILTY CLAY	50		10	4 6 6	2.46 B	17

GENERAL NOTES

Begin Drilling: **05-11-2009** Complete Drilling: **05-18-2009**
Drilling Contractor: **GTC** Drill Rig: **CME 75 TMR**
Driller: **T & K** Logger: **E. Datz** Checked by: **N. Davis**
Drilling Method: **3.25 IDA HSA; Boring backfilled upon completion**

WATER LEVEL DATA

While Drilling: **DRY**
At Completion of Drilling: **DRY**
Time After Drilling: **NA**
Depth to Water: **NA**

The stratification lines represent the approximate boundary between soil types; the actual transition may be gradual.

Wang Engineering, Inc.
Consulting Geotechnical and Environmental Engineers
wangeng@wangeng.com
1145 Main Street
Lombard, IL 60148
Telephone: 630 953-9928
Fax: 630 953-9938

BORING LOG B-03

WEI Job No.: 314-05-01

Client: **Bowman, Barrett & Associates**
Project: **Irving Park Road over N. Chicago River**
Location: **Chicago, IL**

Datum: CCD
Elevation: 23.20 ft
North: 1926500.90 ft
East: 1158075.25 ft
Station:
Offset:

Profile	Elevation (ft)	SOIL AND ROCK DESCRIPTION	Depth (ft)	Sample Type / recovery	Sample No.	SPT Values (blw/6 in)	Qu (tsf)	Moisture Content (%)
	-28.6	Very dense, gray SILTY LOAM, with thin interbeds of SILTY CLAY --A-6 (17)-- LL=20%, PL=14% GRAVEL=5.5% SAND=31.0% SILT=50.9% CLAY=12.6%	55		11	30 33 41	NP	10
			60		12	12 10 14	NP	21
	-38.8	Medium dense, SILT with COBBLES --DIFFICULT DRILLING--						
	-40.8	Medium dense, gray SILT to SILTY LOAM	65		13	15 14 15	NP	14
	-43.6	Very dense, gray, fine SAND, with weathered bedrock fragments						
	-45.8	Very dense, WEATHERED DOLOSTONE BEDROCK --DIFFICULT DRILLING-- --AUGER REFUSAL @ 73.5'--	70		14	40 50/3"	NP	11
	-50.3	Poor, light gray DOLOSTONE --BEDROCK-- RUN #1 (73.5' to 78.0')	75					
		REC=92% RQD=37%		R 1				
		RUN #2 (78.0' to 83.0') REC=100% RQD=42%	80	R 2				
	-59.8	Boring terminated at 83.00 ft	85					
			90					
			95					
			100					

GENERAL NOTES

Begin Drilling: **05-11-2009** Complete Drilling: **05-18-2009**
Drilling Contractor: **GTC** Drill Rig: **CME 75 TMR**
Driller: **T & K** Logger: **E. Datz** Checked by: **N. Davis**
Drilling Method: **3.25 IDA HSA; Boring backfilled upon completion**

WATER LEVEL DATA

While Drilling: **DRY**
At Completion of Drilling: **DRY**
Time After Drilling: **NA**
Depth to Water: **NA**

The stratification lines represent the approximate boundary between soil types; the actual transition may be gradual.

...\0166090-E5038-057-SB03.dgn
11/29/2017 1:48:35 PM
WANGENGINC 3140501.GPJ WANGENG.GDT 9/29/09

DESIGN:				
DRAWN: MTR				
CHECKED:				
APPROVED: DF				
DATE: 11/29/2017				
SCALE:				
FILE:	NO.	BY	DATE	DESCRIPTION
	REVISIONS			

KEY PLAN:

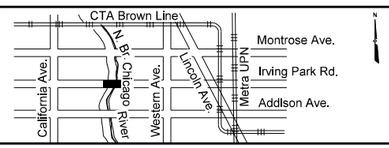

CDOT
CHICAGO DEPARTMENT OF TRANSPORTATION

BOWMAN, BARRETT & ASSOCIATES INC.
CONSULTING ENGINEERS
Chicago, Illinois
312.228.0100
www.bbandainc.com

W. IRVING PARK ROAD AT NORTH BRANCH CHICAGO RIVER

SOIL BORING LOGS III
STRUCTURE NO. 016–6090

PROJECT NO. E-5-038
DRAWING NO. S–60
CONTRACT NO. XXXXX

TOTAL SHEETS	SHEET NO.
184	161

Wang Engineering, Inc.
Consulting Geotechnical and Environmental Engineers
wangeng@wangeng.com
1145 Main Street
Lombard, IL 60148
Telephone: 630 953-9928
Fax: 630 953-9938

BORING LOG B-04

WEI Job No.: 314-05-01

Client: **Bowman, Barrett & Associates**
Project: **Irving Park Road over N. Chicago River**
Location: **Chicago, IL**

Datum: CCD
Elevation: 22.60 ft
Ncrth: 1926444.85 ft
East: 1158091.84 ft
Station:
Offset:

Profile	Elevation (ft)	SOIL AND ROCK DESCRIPTION	Depth (ft)	Sample Type / recovery	Sample No.	SPT Values (blw/6 in)	Qu (tsf)	Moisture Content (%)
	22.4	2.5-inch thick ASPHALT						
	21.9	--OVERLAY PAVEMENT--						
		6.5-inch thick CONCRETE --BRIDGE DECK PAVEMENT--						
		AIR						
		--AIR-- --AUGERS HUNG 16' THROUGH BRIDGE DECK--	5					
			10					
			15					
	6.6	Stiff, brown SILTY CLAY --3-inch OD Split Spoon Sampler-- --FILL--			1	5 5 4	1.31 B	20
	3.6	Stiff, brown and gray SILTY CLAY --FILL--	20		2	3 3 4	1.89 S	21
			25		3	7 5 5	NR	13
	-3.9	Stiff to very stiff, gray SILTY CLAY --A-6 (13)-- LL=34%, PL=18% GRAVEL=3.1% SAND=11.0% SILT=50.3% CLAY=35.6%	30		4	2 2 4	1.39 B	16
					5	3 3 4	1.97 B	21
					6	3 3 4	2.05 B	21
	-11.4	Medium dense, gray SILT			7	3 4 5	2.46 B	17
	-12.4	Stiff to very stiff, gray CLAY	35		8	6 4 6	2.30 B	15
					9	3 4 5	2.21 B	23
			40		10	2 2 4	1.56 B	27
	-18.9	--A-6 (20)-- LL=40%, PL=17% GRAVEL=5.3% SAND=7.9% SILT=43.6% CLAY=43.2% Hard, gray SILTY CLAY, trace gravel			11	10 9 11	7.38 B	14
			45		12	4 6 9	5.99 B	17
	-24.2	Medium dense to dense, gray LOAM						
		--A-4 (0)--	50					

GENERAL NOTES

Begin Drilling: **04-28-2009** Complete Drilling: **04-29-2009**
Drilling Contractor: **GTC** Drill Rig: **CME 75 TMR**
Driller: **T & K** Logger: **C. Davis** Checked by: **N. Davis**
Drilling Method: **3.25 IDA HSA; Boring backfilled upon completion**

WATER LEVEL DATA

While Drilling: **38.00 ft**
At Completion of Drilling: **NA**
Time After Drilling: **NA**
Depth to Water: **NA**

The stratification lines represent the approximate boundary between soil types; the actual transition may be gradual.

WANGENGINC 3140501.GPJ WANGENG.GDT 9/29/09

Wang Engineering, Inc.
Consulting Geotechnical and Environmental Engineers
wangeng@wangeng.com
1145 Main Street
Lombard, IL 60148
Telephone: 630 953-9928
Fax: 630 953-9938

BORING LOG B-04

WEI Job No.: 314-05-01

Client: **Bowman, Barrett & Associates**
Project: **Irving Park Road over N. Chicago River**
Location: **Chicago, IL**

Datum: CCD
Elevation: 22.60 ft
North: 1926444.85 ft
East: 1158091.84 ft
Station:
Offset:

Profile	Elevation (ft)	SOIL AND ROCK DESCRIPTION	Depth (ft)	Sample Type / recovery	Sample No.	SPT Values (blw/6 in)	Qu (tsf)	Moisture Content (%)
		LL=19%, PL=14% GRAVEL=9.5% SAND=40.3% SILT=41.0% CLAY=9.3%			13	4 7 11	NP	11
	-34.2	Medium dense to very dense, gray SILTY LOAM --WET--	55		14	18 18 19	NP	9
		--A-4 (2)-- LL=20%, PL=16% GRAVEL=9.5% SAND=40.3% SILT=41.0% CLAY=9.3%	60		15	4 6 11	NP	21
			65		16	13 19 22	NP	21
	-47.9	Very dense, WEATHERED DOLOSTONE BEDROCK --DIFFICULT DRILLING--	70		17	62 60/6	NP	10
	-49.5	--AUGER REFUSAL @ 72.1'-- Fair, gray DOLOSTONE --BEDROCK-- RUN #1 (72.1' to 78.6') REC= 97%	75		18	50/1	NR	
		RQD= 70%			R 1			
	-56.0	Boring terminated at 78.60 ft	80					
			85					
			90					
			95					
			100					

GENERAL NOTES

Begin Drilling: **04-28-2009** Complete Drilling: **04-29-2009**
Drilling Contractor: **GTC** Drill Rig: **CME 75 TMR**
Driller: **T & K** Logger: **C. Davis** Checked by: **N. Davis**
Drilling Method: **3.25 IDA HSA; Boring backfilled upon completion**

WATER LEVEL DATA

While Drilling: **38.00 ft**
At Completion of Drilling: **NA**
Time After Drilling: **NA**
Depth to Water: **NA**

The stratification lines represent the approximate boundary between soil types; the actual transition may be gradual.

WANGENGINC 3140501.GPJ WANGENG.GDT 9/29/09

...\0166090-E5038-058-SB04.dgn
11/29/2017 1:48:46 PM

DESIGN: SF				
DRAWN: MTR				
CHECKED:				
APPROVED: DF				
DATE: 11/29/2017				
SCALE:				
FILE:	NO.	BY	DATE	DESCRIPTION
	REVISIONS			

KEY PLAN:

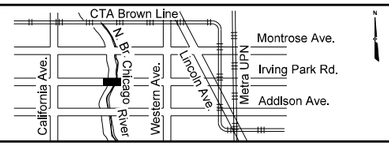

CDOT
CHICAGO DEPARTMENT OF TRANSPORTATION

BOWMAN, BARRETT & ASSOCIATES INC.
CONSULTING ENGINEERS
Chicago, Illinois
312.228.0100
www.bbandainc.com

W. IRVING PARK ROAD AT NORTH BRANCH CHICAGO RIVER

SOIL BORING LOGS IV
STRUCTURE NO. 016-6090

PROJECT NO. E-5-038
DRAWING NO. S-61
CONTRACT NO. XXXXX

TOTAL SHEETS	SHEET NO.
184	162

REVISIONS				
ZONE	REV	DESCRIPTION	DATE	APPROVED

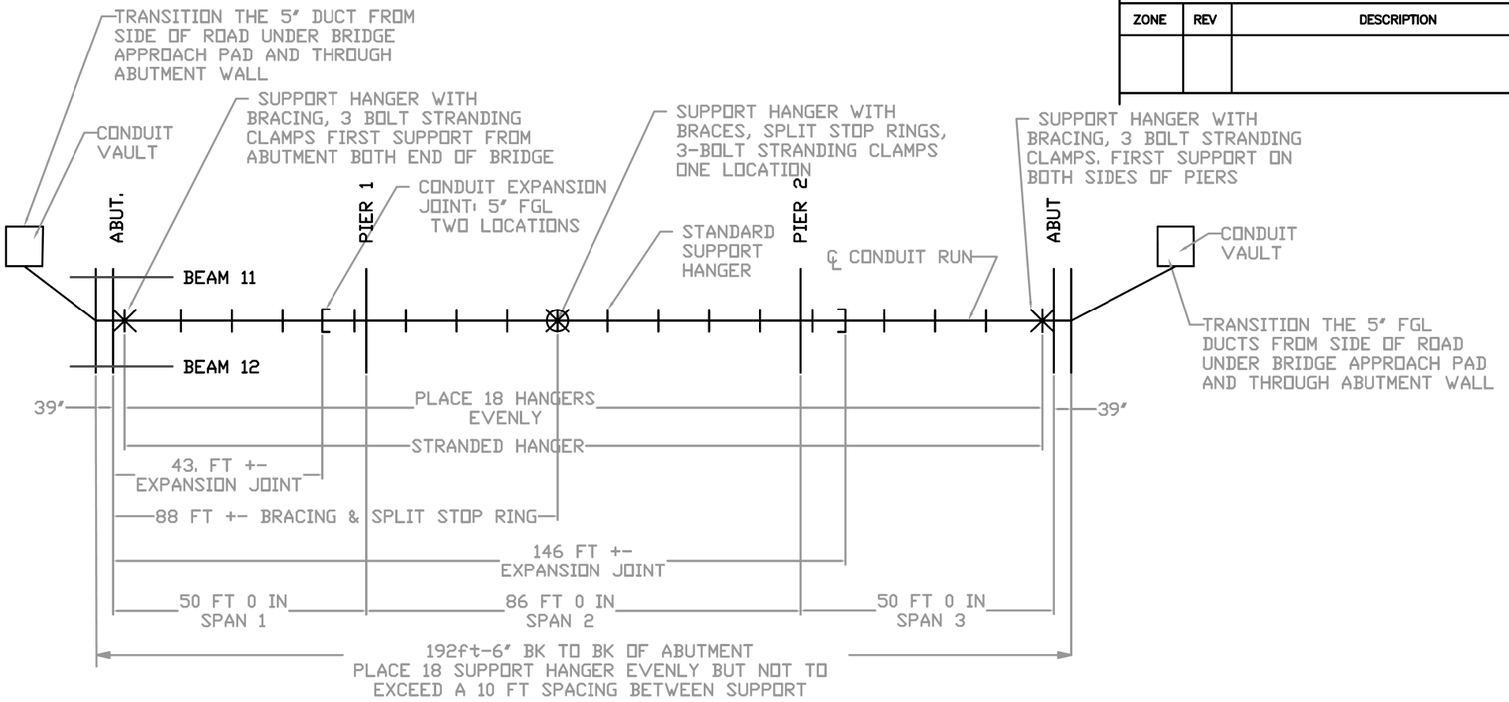

NOTE
PLACE COM ED CONDUIT RUN BETWEEN BRIDGE GIRDERS 11 AND 12.
RUN CONDUITS THROUGH BRIDGE ABUTMENT BACK WALLS IN A 1 HIGH X 6 WIDE CONFIGURATION.
RUN GUY STRANDING IN EACH SPAN OF THE BRIDGE NOT CROSSING ANY BRIDGE DECK EXPANSION JOINTS.
CENTER MOST SUPPORT HANGER WILL HAVE BRACING AND FGL SPLIT STOP RINGS TO PREVENT CONDUIT TO MOVE THROUGH THAT SUPPORT.
EXPANSION JOINTS ARE REQUIRED IN TWO LOCATIONS 1/4 AND 3/4 THE WAY ACROSS THE BRIDGE.

NOTES:
1. ALL MATERIALS REQUIRED FOR THE PLACEMENT OF THIS UNDER BRIDGE CONDUIT SYSTEM WILL BE PROVIDED BY COM ED.
2. FIBERGLASS CONDUIT 5" IPS (5.57 O.D. X .097 WALL) MEETING NEMA TC-14A.
3. ALL FIBERGLASS CONDUIT JOINTS ARE TO BE EPOXIED.
4. SPLIT STOP RINGS ARE TO BE EPOXIED TO EACH DUCT AT SPECIFIED SUPPORT HANGER LOCATIONS.
5. CONDUIT EXPANSION JOINTS ARE PLACED BETWEEN TWO SPECIFIED INTERMEDIATE HANGERS.
6. SUPPORT HANGERS AND INSERTS MANUFACTURED FROM CONDUX INTERNATIONAL, INC. OF MANKATO MN, PHONE: 1-800-533-2077 QUOTE NO. 3985264078
6. CONDUIT SUPPORT HANGER WEIGHT: 37.00 LBS EA
   FGL CONDUIT AND FITTINGS WEIGHT: 1.24 LBS PER FT
   CABLE 650 CU EXFSJ COMED ESP 5.3.8.2 WEIGHT: 8.4 LBS PER FT.
TOTAL WEIGHT 12233.0 LBS

Note:
ALL MEASUREMENTS ARE IN INCHES
UNLESS NOTED OTHERWISE
DRAWING APPROVAL
I _____
APPROVE THIS DRAWING FOR MANUFACTURING
DATE: _____

Layout of support hangers and condult and fittings	CONDUX INTERNATIONAL, INC. MANKATO MN PH. 800-533-2077
	Project: COM ED West Irving Park Road at North Branch Chicago River
WEIGHT: 0.0 LBS EA	SIZE: — FSCM NO.: — DWG NO.: TBA REV: —
QUOTE NO. 3985264078	SCALE: 1/2 DATE: 08-02-2017 SHEET: 1 OF 2

...\Cadd Sheets\E5038-sht-fyl1.dgn
11/29/2017 1:48:58 PM

DESIGN:				
DRAWN:				
CHECKED:				
APPROVED:				
DATE: 11/29/2017				
SCALE:				
FILE:	NO.	BY	DATE	DESCRIPTION
	REVISIONS			

KEY PLAN:

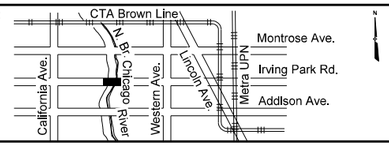

CDOT
CHICAGO DEPARTMENT OF TRANSPORTATION

BOWMAN, BARRETT & ASSOCIATES INC.
CONSULTING ENGINEERS
Chicago, Illinois
312.228.0100
www.bbandainc.com

W. IRVING PARK ROAD AT NORTH BRANCH CHICAGO RIVER

FOR INFORMATION ONLY

PROJECT NO. E-5-038
DRAWING NO. DET-1
CONTRACT NO. XXXXX

TOTAL SHEETS	SHEET NO.
184	163

REVISIONS				
ZONE	REV	DESCRIPTION	DATE	APPROVED

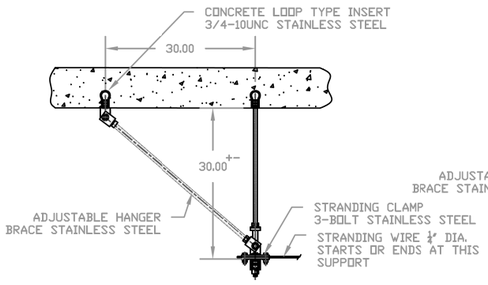

STANDARD SUPPORT HANGER
WITH BRACING, 3-BOLT STRANDING
CLAMPS, LOCATIONS FIRST HANGER
INSIDE EACH ABUTMENT

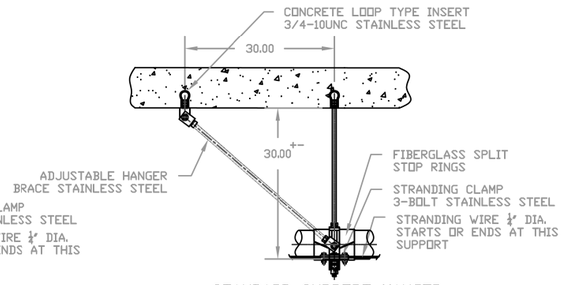

STANDARD SUPPORT HANGER
WITH BRACING, SPLIT FGL
STOP RINGS AND 3-BOLT
CLAMPS
1 LOCATION

BILL OF MATERIAL

ITEM NO.	PART NO.	DESCRIPTION	QTY	UNIT
1	TBA	STANDARD CONDUIT SUPPORT HANGER; 1 HIGH X 6 WIDE FIBERGLASS AND STAINLESS STEEL OPENING FOR SIX 5" FGL DUCTS THREADED RODS THREE @ 3/4-10UNC X 36.00 LONG	18	EA.
2	08610242	HANGER BRACE ADJUSTABLE; 42 INCH STAINLESS STEEL	6	EA.
3	08409990	CONCRETE INSERT; 3/4-10 LOOP TYPE, STAINLESS STEEL	60	EA.
4	08558300	CONCRETE INSERT SETTING PLUG; 3/4-10	60	EA.
5				
6	08408950	STRANDING WIRE; ¼ X 300 FT., STAINLESS STEEL	1	EA.
7	08409404	GUY STRAND CLAMP; 3-BOLT, STAINLESS STEEL	6	EA.
8	08409504	GUY STRAND CLAMP; 1-BOLT, STAINLESS STEEL	30	EA.
9	08460053	CONDUIT FIBERGLASS; 5" IPS, MW (5.57 O.D. X .096 WALL) MEETING NEMA TC-14A	1200	FT.
10	08460153	CONDUIT STOP COUPLING; 5" IPS MW	12	EA.
11	08460453	CONDUIT EXPANSION JOINT O-RING TYPE; 5" IPS MW	12	EA.
12	08460953	CONDUIT SPLIT STOP RING; 5" IPS MW	12	EA.
13	08461553	CONDUIT ADAPTER; 5" IPS MW TO 5" GRC	12	EA.
14	08463402	CONDUIT EPOXY ADHESIVE CARTRIDGE;	10	EA.
15	02288990	CONDUIT EPOXY ADHESIVE GUN	1	EA.

General Construction, Hanger and Conduit Notes
1.0 Recommended spacing between Support is 10 foot.
2.0 Support Hanger Material shall be manufactured using 316 stainless steel and fiberglass components.
3.0 Conduit is 5 inch Fiberglass with minimum wall thickness of .096 inch meeting NEMA TC-14A Specs.
4.0 Conduit joints shall be positive locking adhesive bonded bell and spigot.
5.0 Conduit expansion joints shall be sliding sleeve with provision for 8 inch of travel.
6.0 Bridge abutments must have a block out or be sleeved to allow the fiberglass conduit to pass through. After conduit is placed through abutment seal up opening with state approved sealant.

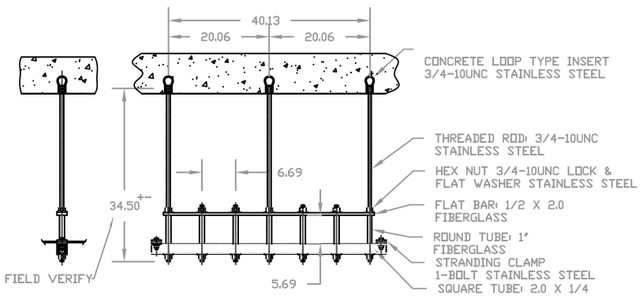

STANDARD SUPPORT HANGER
WITH 1-BOLT STRANDING
CLAMPS

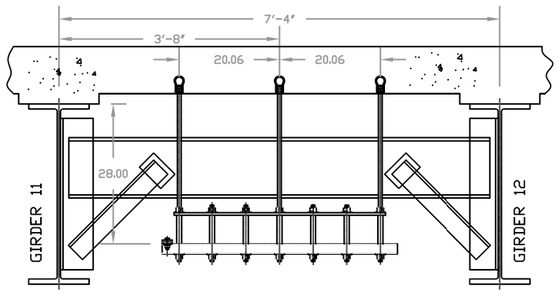

LOOK AT DIAPHRAGM D4

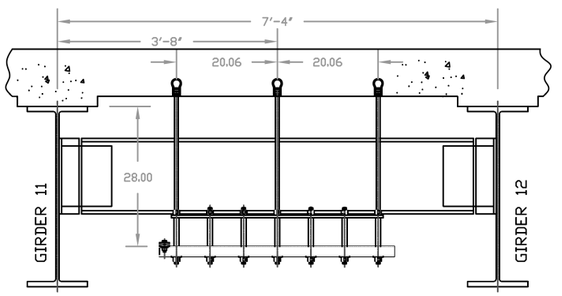

LOOK AT DIAPHRAGM D2

NOTE
NO PART OF THE CONDUIT SUPPORT HANGER
CAN EXTEND BELOW THE BRIDGE GIRDERS
EXTENDED RODS MAY NEED TO BE ALTERED

Condux International, Inc. Support hanger meet the following specifications
Fiberglass Items
Flat Bar; ½ x 2.0
Round Tube; 1.0" O.D. .105 wall
Square Tube; 2 x 2 x 1/4
Fiberglass reinforced with polyester resin with surface veil for better weathering, resin shall contains u.v. inhibitor. Fiberglass is made with continuous strand mat and uni-directional roving.
gray in color
Tensile Strength (ASTM D 638) 30,000 PSI
Tensile Modules (ASTM D 638) 2.3E6 PSI
Flexural Strength (ASTM D 790) 30,000 PSI
Flexural Modules (ASTM D 790) 2.3E6 PSI
Compressive Strength (ASTM D 695 20,000 PSI
Compressive Modules 1.4E6 PSI
Yield shear strength 2000 PSI
Barcol hardness 50
Dielectric strength (ASTM D 149) 200 VPM Min.

Stainless steel Hardware Items
Threaded Rod
Threaded rod meets (ASTM/ASME B1.1)
(ASTM A307 Grade A) (Tensile Strength 60,000 PSI)
Hexnut
Hexnut meets (ANSI/ASME B18.2.2)
Material; 316 Stainless steel (ASTM F594)
Flatwasher
Flatwasher meets (ANSI/ASME B18.22.1)
Material; 316 stainless steel (ASTM F436)
Lockwasher
Lockwasher meets (ANSI/ASME B18.21.1)
Material; 316 Stainless steel (ASTM F436)
Stranding Items
Stranding Clamps (1-Bolt & 3-Bolt)
Material; 1/4 x 1.5 (316 Stainless Steel)
Stranding Wire
Cable; ¼" Dia (7 X 19 Steel Aircraft)
304 Stainless Steel
Bracing
Adjustable hanger attachment brackets
Material; angle 2.5 x 2.5 x .25 (316 Stainlss steel)

DRAWING APPROVAL
I _____
APPROVE THIS DRAWING FOR MANUFACTURING
DATE; _____

Note;
ALL MEASUREMENTS ARE IN INCHES UNLESS NOTED OTHERWISE

CONDUIT SUPPORT HANGER DETAIL AND BILL OF MATERIALS	CONDUX INTERNATIONAL, INC. MANKATO MN PH. 800-533-2077
	Project; Com Ed West Irving Park Road at North Branch Chicago River
WEIGHT; 0.0 LBS EA	SIZE: — FSCM NO.: — DWG NO.: TBA REV: 0.0
QUOTE NO. 3985264078	SCALE 1/2 DATE; 08-02-2017 SHEET 2 OF 2

DESIGN:				
DRAWN:				
CHECKED:				
APPROVED:				
DATE: 11/29/2017				
SCALE:				
FILE:	NO.	BY	DATE	DESCRIPTION
	REVISIONS			

KEY PLAN:

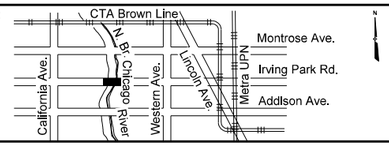

CDOT
CHICAGO DEPARTMENT
OF TRANSPORTATION

BOWMAN, BARRETT
& ASSOCIATES INC.
CONSULTING ENGINEERS
Chicago, Illinois
312.228.0100
www.bbandainc.com

W. IRVING PARK ROAD
AT NORTH BRANCH
CHICAGO RIVER

FOR INFORMATION ONLY

PROJECT NO. E-5-038
DRAWING NO. DET-2
CONTRACT NO. XXXXX

11/29/2017 1:49:13 PM ...\Cadd Sheets\E5038-sht-fyl2.dgn

TOTAL SHEETS	SHEET NO.
184	164

Bench Mark: Chiseled plus cut in north sidewalk along Irving Park Rd., approximately 400' west of S.N. 016-6082 West Abutment, Elevation 12.86.

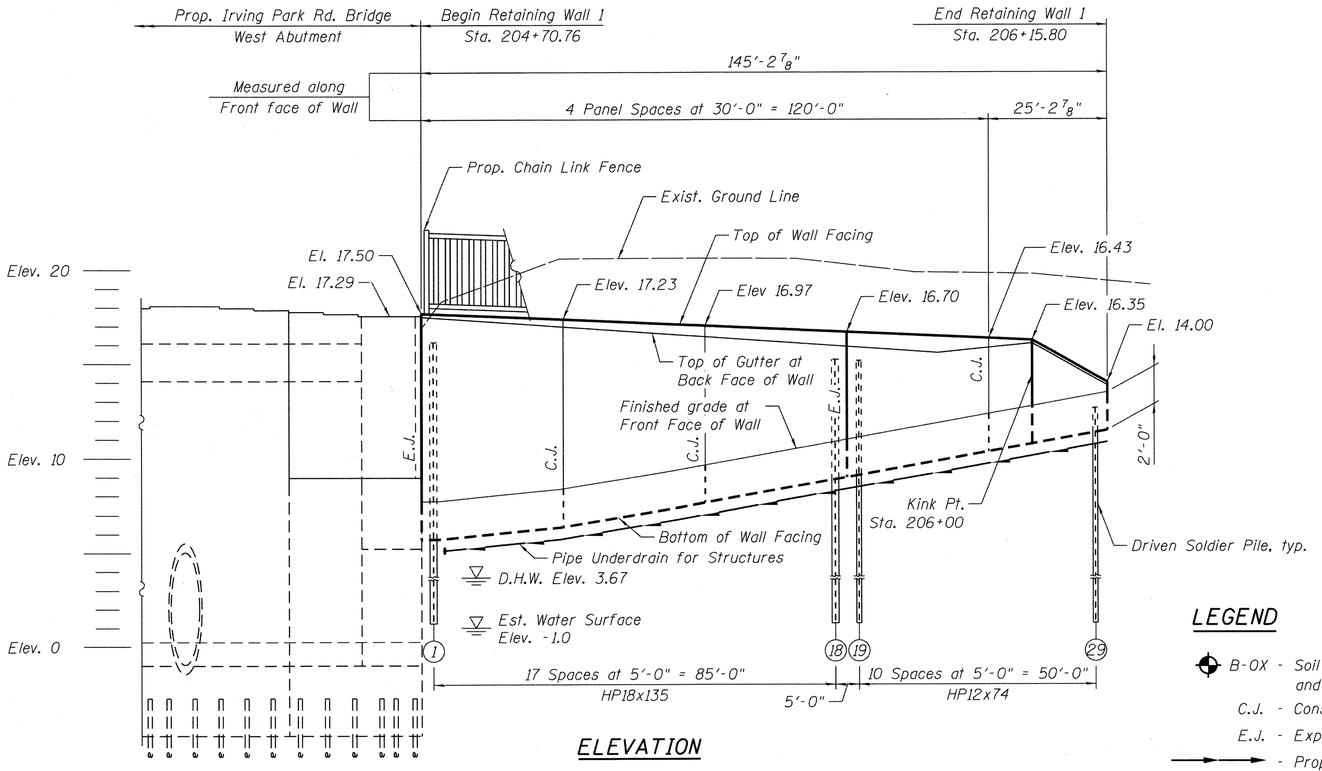

ELEVATION

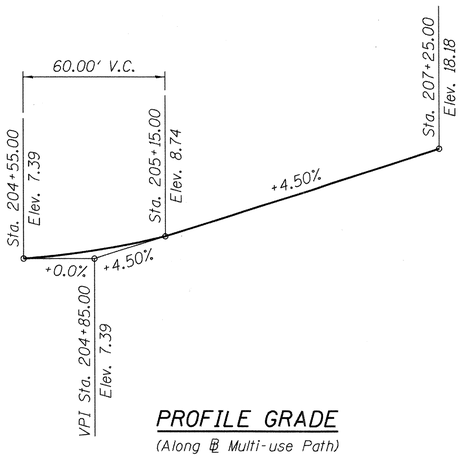

PROFILE GRADE

(Along ℄ Multi-use Path)

LEGEND

- B-0X - Soil Boring Location and Identifier
- C.J. - Construction Joint
- E.J. - Expansion Joint
- Prop. Storm Sewer
- Prop. Lighting

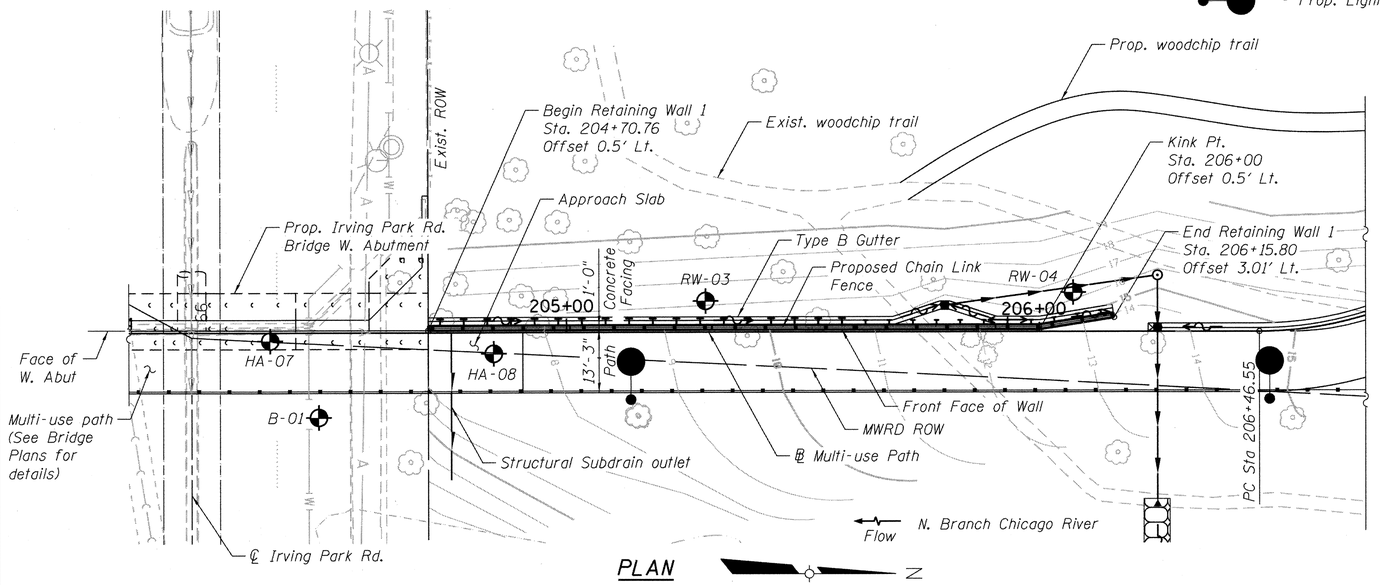

PLAN

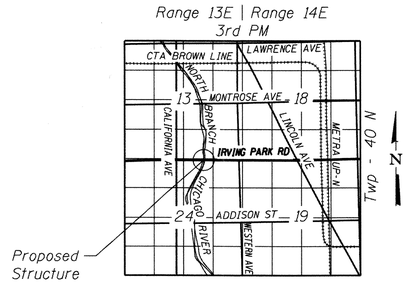

LOCATION SKETCH

DESIGN SPECIFICATIONS

2014 AASHTO LRFD Bridge Design Specifications, 7th Edition, with 2015 Interim Revisions

DESIGN STRESSES

FIELD UNITS

f'c = 4,000 psi High Performance Concrete
fy = 60,000 psi (Reinforcement)
fy = 50,000 psi (AASHTO M270 Grade 50)

SEISMIC DATA

Seismic Performance Zone (SPZ) = 1
Design Spectral Acceleration at 1.0 sec (S_{D1}) = 0.060g
Design Spectral Acceleration at 0.2 sec (S_{DS}) = 0.106g
Soil Site Class = C

LOADING

100 psf Live Load Surcharge

GENERAL NOTES

The Contractor is responsible for the design and performance of the lagging using no less than a 3 in. nominal rough-sawn thickness and timber with a minimum allowable bending stress of 1,000 psi.

All structural steel shall be AASHTO M 270 Grade 50.

All exposed concrete edges shall have a 3/4" x 45° chamfer, except where shown otherwise. Chamfer on vertical edges shall be continued a minimum of one foot below finished ground level.

Reinforcement bars designated (E) shall be epoxy coated.

Cover from the face of concrete to face of reinforcement bars shall be 3" for surfaces formed against earth and 2" for all other surfaces unless otherwise shown.

Contractor shall not scale dimensions from the plans for construction purposes.

No construction joints except those shown on the plans will be allowed unless approved by the engineer.

It shall be the contractor's responsibility to verify the location of all utilities prior to starting construction. Contact D.I.G.G.E.R., 312-744-7000.

Refer to drainage and utility plans and drainage profiles in the contract plan set for drainage structures, pipes, and pipe outlets in the vicinity of the retaining wall.

Stations and offsets of the wall are relative to ℄ Prop. Path at the front face of wall.

Horizontal dimensions are measured along the front face of wall unless noted otherwise.

The wall shall be backfilled to the top of pile elevation prior to constructing wall facing.

Bend horizontal reinforcement bars in the field to fit at horizontal kinks in the wall.

See Architectural Plans for details of proposed chain link fence.

DANIEL S. FLICE
081-007107
LICENSED
STRUCTURAL
ENGINEER
STATE OF ILLINOIS

SIGNED: Dan Flice
DATE: OCTOBER 20, 2017
EXPIRES: November 30, 2018

I certify that to the best of knowledge, information and belief, this wall design is structurally adequate for the design loading specified. The design is an economical one for the style of structure and complies with requirements of the above AASHTO Design Specifications.

DESIGN: CA				
DRAWN: MTR				
CHECKED:				
APPROVED: DF				
DATE: 10/20/2017				
SCALE:				
FILE:	NO.	BY	DATE	DESCRIPTION
	REVISIONS			

KEY PLAN:

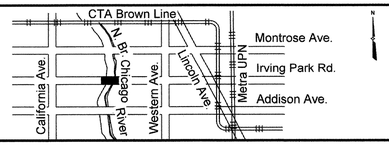

CDOT
CHICAGO DEPARTMENT OF TRANSPORTATION
MTR CA

BOWMAN, BARRETT & ASSOCIATES INC.
CONSULTING ENGINEERS
Chicago, Illinois
312.228.0100
www.bbandainc.com

W. IRVING PARK ROAD AT NORTH BRANCH CHICAGO RIVER

RETAINING WALL 1
GENERAL PLAN AND ELEVATION

PROJECT NO. E-5-038
DRAWING NO. RW-1
CONTRACT NO. XXXXX

...IRW1-E5038-001-GPE.dgn
11/6/2017 3:56:21 PM

TOTAL SHEETS	SHEET NO.
184	165

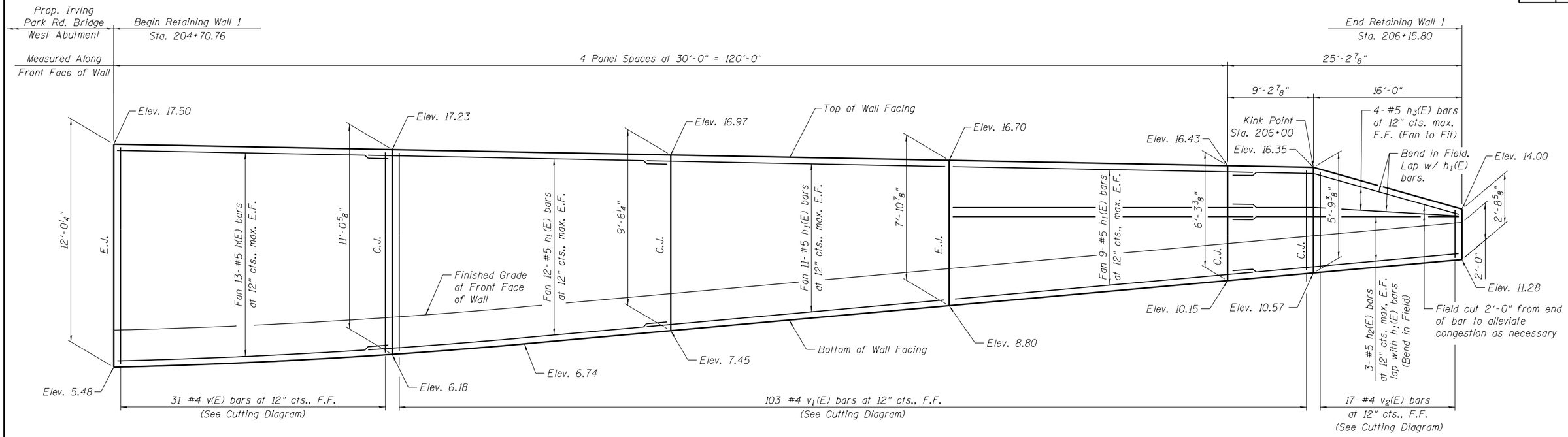

FRONT FACE WALL ELEVATION

Notes:

F.F. denotes Front Face
E.F. denotes Each Face

MIN BAR LAP

#5 = 3'-3"

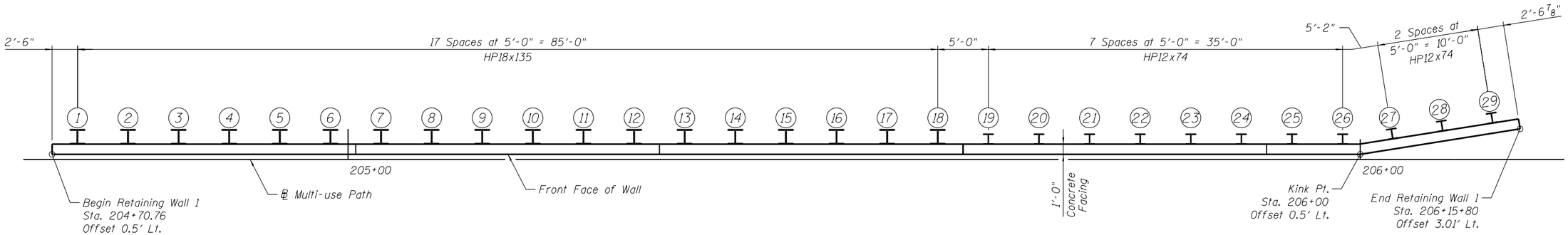

PLAN

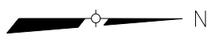

DESIGN:				
DRAWN:				
CHECKED:				
APPROVED: DF				
DATE: 11/29/2017				
SCALE:				
FILE:	NO.	BY	DATE	DESCRIPTION
	REVISIONS			

KEY PLAN:

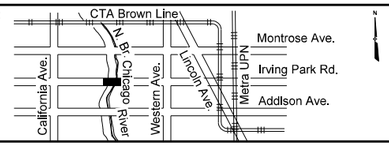

CDOT
CHICAGO DEPARTMENT OF TRANSPORTATION

BOWMAN, BARRETT & ASSOCIATES INC.
CONSULTING ENGINEERS
Chicago, Illinois
312.228.0100
www.bbandainc.com

W. IRVING PARK ROAD AT NORTH BRANCH CHICAGO RIVER

RETAINING WALL 1
DETAILED PLAN AND ELEVATION

PROJECT NO.	E-5-038
DRAWING NO.	RW–2
CONTRACT NO.	XXXXX

...\RW1-E5038-002-DET1.dgn
11/29/2017 1:49:41 PM

TOTAL SHEETS	SHEET NO.
184	166

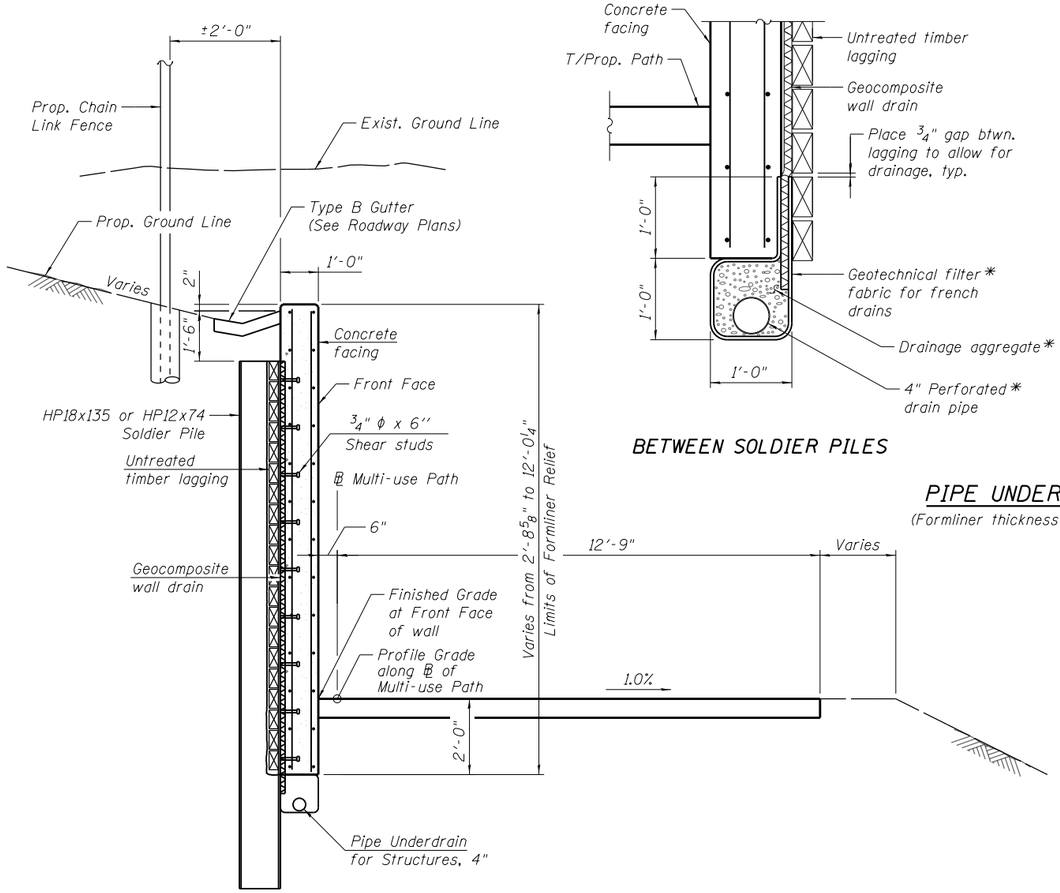

SECTION THRU SOLDIER PILE WALL

(Formliner thickness not shown for clarity)

BETWEEN SOLDIER PILES

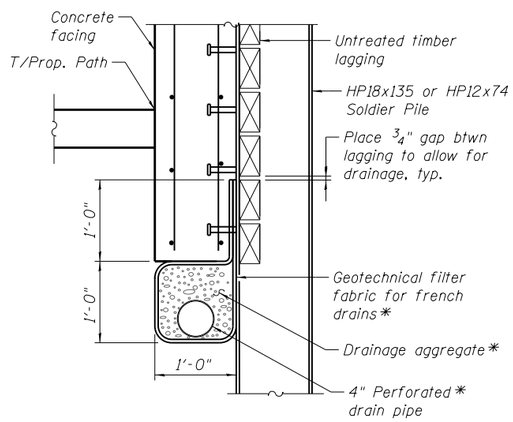

AT SOLDIER PILES

PIPE UNDERDRAIN DETAIL

(Formliner thickness not shown for clarity)

* Included in the cost of Pipe Underdrains for Structures

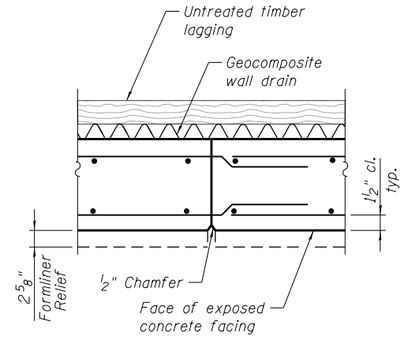

CONSTRUCTION JOINT DETAIL

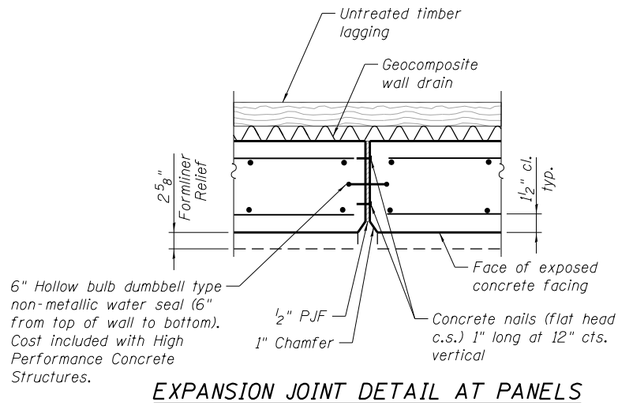

EXPANSION JOINT DETAIL AT PANELS

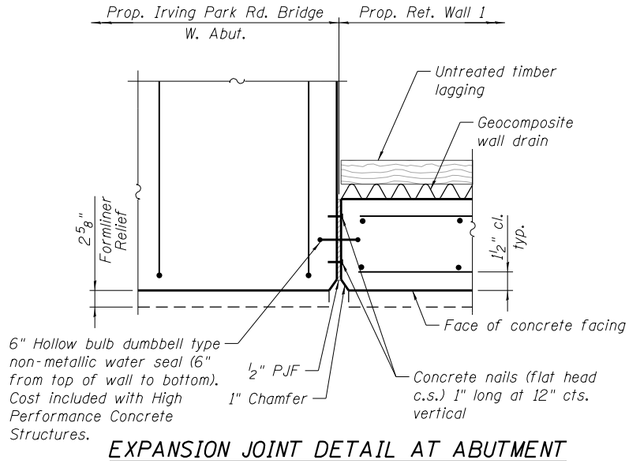

EXPANSION JOINT DETAIL AT ABUTMENT

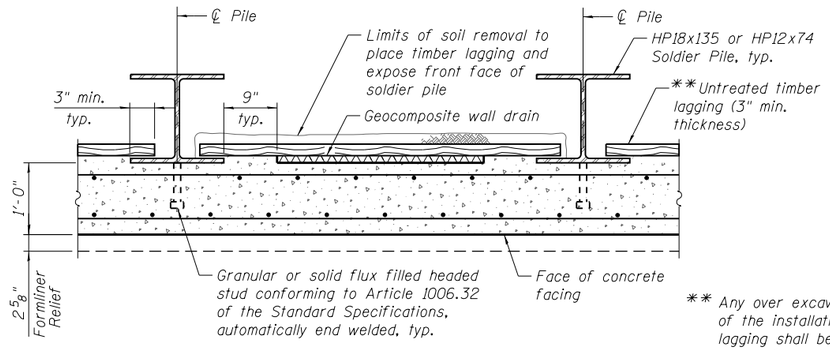

SECTION THRU SOLDIER PILE WALL

** Any over excavation done as part of the installation of the timber lagging shall be backfilled with FA4 at the Contractor's expense

...\RW1-E5038-003-DET2.dgn
11/29/2017 1:49:43 PM

DESIGN: CA				
DRAWN: MTR				
CHECKED:				
APPROVED: DF				
DATE: 11/29/2017				
SCALE:				
FILE:	NO.	BY	DATE	DESCRIPTION
	REVISIONS			

KEY PLAN:

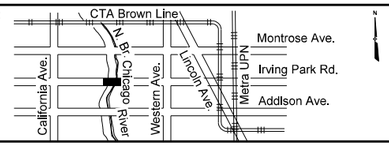

CDOT
CHICAGO DEPARTMENT OF TRANSPORTATION

BOWMAN, BARRETT & ASSOCIATES INC.
CONSULTING ENGINEERS
Chicago, Illinois
312.228.0100
www.bbandainc.com

W. IRVING PARK ROAD AT NORTH BRANCH CHICAGO RIVER

RETAINING WALL 1
SECTIONS AND DETAILS

PROJECT NO.	E-5-038
DRAWING NO.	RW-3
CONTRACT NO.	XXXXX

TOTAL SHEETS	SHEET NO.
184	167

SOLDIER PILE SCHEDULE

Pile No.	*Station	*Offset	Pile Size	Bottom of Facing Elev.	Top of Pile Elev.	Pile Tip Elevation	Pile Length (feet)	No. of Shear Studs
1	204+73.26	1.5 Lt.	HP18x135	5.52	15.81	-25.00	40.81	11
2	204+78.26	1.5 Lt.	HP18x135	5.59	15.77	-24.93	40.70	11
3	204+83.26	1.5 Lt.	HP18x135	5.69	15.72	-24.83	40.55	11
4	204+88.26	1.5 Lt.	HP18x135	5.80	15.68	-24.72	40.40	11
5	204+93.26	1.5 Lt.	HP18x135	5.94	15.63	-24.58	40.21	11
6	204+98.26	1.5 Lt.	HP18x135	6.09	15.59	-24.43	40.02	10
7	205+03.26	1.5 Lt.	HP18x135	6.26	15.54	-24.26	39.80	10
8	205+08.26	1.5 Lt.	HP18x135	6.45	15.50	-24.07	39.57	10
9	205+13.26	1.5 Lt.	HP18x135	6.66	15.46	-23.86	39.32	10
10	205+18.26	1.5 Lt.	HP18x135	6.89	15.41	-23.63	39.04	10
11	205+23.26	1.5 Lt.	HP18x135	7.11	15.37	-23.41	38.78	9
12	205+28.26	1.5 Lt.	HP18x135	7.34	15.32	-23.18	38.50	9
13	205+33.26	1.5 Lt.	HP18x135	7.56	15.28	-22.96	38.24	9
14	205+38.26	1.5 Lt.	HP18x135	7.79	15.23	-22.73	37.96	8
15	205+43.26	1.5 Lt.	HP18x135	8.01	15.19	-22.51	37.70	8
16	205+48.26	1.5 Lt.	HP18x135	8.24	15.14	-22.28	37.42	8
17	205+53.26	1.5 Lt.	HP18x135	8.46	15.10	-22.06	37.16	8
18	205+58.26	1.5 Lt.	HP18x135	8.69	15.05	-21.83	36.88	7
19	205+63.26	1.5 Lt.	HP12x74	8.91	15.01	-16.87	31.88	7
20	205+68.26	1.5 Lt.	HP12x74	9.14	14.97	-16.64	31.61	7
21	205+73.26	1.5 Lt.	HP12x74	9.36	14.92	-16.42	31.34	7
22	205+78.26	1.5 Lt.	HP12x74	9.59	14.88	-16.19	31.07	6
23	205+83.26	1.5 Lt.	HP12x74	9.81	14.83	-15.97	30.80	6
24	205+88.26	1.5 Lt.	HP12x74	10.04	14.79	-15.74	30.53	6
25	205+93.26	1.5 Lt.	HP12x74	10.26	14.74	-15.52	30.26	5
26	205+98.26	1.5 Lt.	HP12x74	10.49	14.70	-15.29	29.99	5
27	206+03.22	2.02 Lt.	HP12x74	10.71	14.18	-15.07	29.25	5
28	206+08.16	2.81 Lt.	HP12x74	10.93	13.45	-14.85	28.30	4
29	206+13.10	3.59 Lt	HP12x74	11.15	12.71	-14.63	27.34	3

* Stations and offsets are relative to ℄ Proposed Path and are given to the front face of the pile (back face of facing) at the ℄ of pile web

BILL OF MATERIAL

Bar	No.	Size	Length	Shape
h(E)	26	#5	29'-9"	———
h_1(E)	64	#5	33'-3"	———
h_2(E)	6	#5	24'-11"	———
h_3(E)	8	#5	25'-2"	———
v(E)	31	#4	22'-4"	———
v_1(E)	103	#4	16'-1"	———
v_2(E)	17	#4	7'-9"	———
High Performance Concrete Structures			Cu. Yd.	46.7
Reinforcement Bars, Epoxy Coated			Pound	5,050
Furnishing Soldier Piles (HP Section)			Foot	1,036
Driving Soldier Piles			Foot	1,036
Concrete Sealer			Sq. Ft.	1,398
Pipe Underdrain for Structures, 4"			Foot	170
Geocomposite Wall Drain			Sq. Yd.	52
Stud Shear Connectors			Each	232
Untreated Timber Lagging			Sq. Ft.	928
Form Liner			Sq. Ft.	1,253

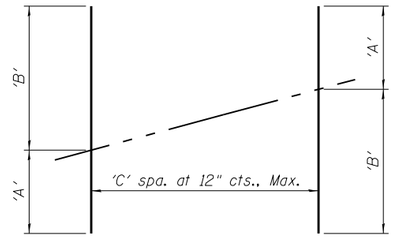

BAR CUTTING DIAGRAM

(Order bars full-length, cut as shown and use remainder at 12" cts. back face)

Bar	'A'	'B'	'C'
v(E)	10'-8"	11'-8"	30
v_1(E)	5'-5"	10'-8"	102
v_2(E)	2'-4"	5'-5"	16

...\RW1-E5038-004-DET3.dgn
11/29/2017 1:49:45 PM

DESIGN: CA				
DRAWN: MTR				
CHECKED:				
APPROVED: DF				
DATE: 11/29/2017				
SCALE:				
FILE:	NO.	BY	DATE	DESCRIPTION
	REVISIONS			

KEY PLAN:

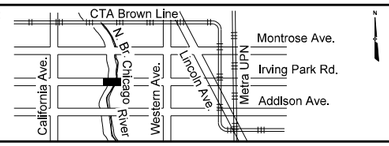

CDOT
CHICAGO DEPARTMENT OF TRANSPORTATION

BOWMAN, BARRETT & ASSOCIATES INC.
CONSULTING ENGINEERS
Chicago, Illinois
312.228.0100
www.bbandainc.com

W. IRVING PARK ROAD AT NORTH BRANCH CHICAGO RIVER

RETAINING WALL 1
SOLDIER PILE SCHEDULE AND BILL OF MATERIAL

PROJECT NO. E-5-038
DRAWING NO. RW-4
CONTRACT NO. XXXXX

TOTAL SHEETS	SHEET NO.
184	168

Wang Engineering
wangeng@wangeng.com
1145 N Main Street
Lombard, IL 60148
Telephone: 630 953-9928
Fax: 630 953-9938

BORING LOG RW-03

WEI Job No.: 314-05-02

Client: **Bowman, Barrett and Associates, Inc.**
Project: **Irving Park Rd. Bridge and Bike Path**
Location: **Chicago IL**

Datum: CCD
Elevation: 20.65 ft
North: 5059.23 ft
East: 9520.18 ft
Station: 203+20.59
Offset: 6.61 RT

Elevation (ft)	Depth (ft)	SOIL AND ROCK DESCRIPTION	Sample Type / recovery	Sample No.	SPT Values (bw/6 in)	Qu (tsf)	Moisture Content (%)
20.6	0	1-inch thick, dark brown SILTY LOAM --TOPSOIL--					
		Hard, dark brown SILTY CLAY LOAM, trace gravel and brick fragments --FILL--		1	5 19 17	4.50 P	23
16.4	4	Very dense, brown SANDY GRAVEL, trace slag, brick and glass fragments; moist --FILL--		2	4 43 9	NR	
				3	21 50/5	NP	19
12.9	8	Stiff, brown and gray SILTY CLAY, trace gravel --FILL--		4	5 4 3	1.25 P	28
10.9	10	SAND lens; wet --FILL--					
9.9		Very stiff, brown SILTY CLAY LOAM, concrete debris and wood chips --FILL--		5	7 50/2	2.00 P	33
8.2	12	Very stiff to hard, brown and gray CLAY to SILTY CLAY, trace gravel		6	8 11 15	3.77 B	16
	15			7	7 11 18	4.51 B	21
2.7	18	Medium stiff to stiff, brown to gray SILTY CLAY to SILTY CLAY LOAM		8	6 10 11	1.97 B	18
		--L_L(%)=26, P_L(%)=15-- --%Gravel=5.6-- --%Sand=21.7-- --%Silt=50.1-- --%Clay=22.6-- --A-6 (6)--		9	3 3 7	0.74 B	27
	20			10	4 6 8	1.97 B	20
-7.3	25	Gray SILT; saturated		11	4 7 7	1.75 P	19
-8.3		Very stiff, gray SILTY CLAY, trace gravel		12	14 11 10	NP	12
	30			13	5 7 11	2.05 B	24
	35			14	8 12 20	2.46 B	15
-24.3	40	Boring terminated at 45.00 ft		15	7 11 13	2.46 B	18
	45						
	50						

GENERAL NOTES

Begin Drilling: **01-15-2016** Complete Drilling: **01-15-2016**
Drilling Contractor: **Wang Testing Services** Drill Rig: **D-25 ATV**
Driller: **N&R** Logger: **J. Rowells** Checked by: **C. Marin**
Drilling Method: **2.25" ID HSA; borehole grouted upon completion.**

WATER LEVEL DATA

While Drilling: **10.00 ft**
At Completion of Drilling: **15.00 ft**
Time After Drilling: **NA**
Depth to Water: **NA**

The stratification lines represent the approximate boundary between soil types; the actual transition may be gradual.

WANGENGINC 3140502.GPJ WANGENG.GDT 3/10/16

BORING LOG RW-04

Wang Engineering
wangeng@wangeng.com
1145 N Main Street
Lombard, IL 60148
Telephone: 630 953-9928
Fax: 630 953-9938

WEI Job No.: 314-05-02

Client: **Bowman, Barrett and Associates, Inc.**
Project: **Irving Park Rd. Bridge and Bike Path**
Location: **Chicago IL**

Datum: CCD
Elevation: 19.84 ft
North: 5136.98 ft
East: 9518.53 ft
Station: 202+42.84
Offset: 8.36 RT

Elevation (ft)	Depth (ft)	SOIL AND ROCK DESCRIPTION	Sample Type / recovery	Sample No.	SPT Values (bw/6 in)	Qu (tsf)	Moisture Content (%)
19.7	0	1-inch thick, dark brown SILTY LOAM --TOPSOIL--					
		Loose, dark brown SANDY GRAVEL, trace brick fragments; moist --FILL--		1	5 3 4	NP	22
16.8	3	Hard, brown SILTY CLAY LOAM, with brick fragments --FILL--		2	4 15 33	>4.5 P	21
14.3	5	Very dense, SANDY GRAVEL, with brick fragments; moist --FILL--		3	50/5	NP	22
11.1	8	Stiff to hard, brown to gray CLAY to SILTY CLAY, trace gravel		4	5 5 5	NR	
	10			5	5 9 11	4.92 B	15
		--interbedded silt seams-- --L_L(%)=35, P_L(%)=17-- --%Gravel=0.5-- --%Sand=14.7-- --%Silt=48.3-- --%Clay=36.5-- --A-6 (4)--		6	7 9 10	3.28 B	15
	15			7	6 8 11	4.46 B	22
	20	--interbedded sand seams--		8	4 5 7	1.89 B	15
-0.7		Gray SILTY LOAM, trace gravel; moist					
-2.1		Brown, medium SAND; wet		9	3 3 5	NP	17
-3.2		Stiff, gray SILTY CLAY LOAM, trace gravel		10	4 6 9	1.15 B	13
	25						
-5.7		Stiff, gray CLAY, trace gravel		11	5 6 7	1.56 B	20
	30			12	5 8 11	1.72 B	23
-11.9		Medium dense, brown, medium GRAVELLY SAND; saturated					
	35			13	9 10 12	NP	11
-16.9		Stiff, gray SILTY CLAY, trace gravel					
	40			14	11 17 23	3.36 B	15
	45			15	7 10 13	2.13 B	18
-25.2		Boring terminated at 45.00 ft					
	50						
	55						

GENERAL NOTES

Begin Drilling: **01-15-2016** Complete Drilling: **01-15-2016**
Drilling Contractor: **Wang Testing Services** Drill Rig: **D-25 ATV**
Driller: **N&R** Logger: **J. Rowells** Checked by: **C. Marin**
Drilling Method: **2.25" ID HSA; Borehole grouted upon completion.**

WATER LEVEL DATA

While Drilling: **22.00 ft**
At Completion of Drilling: **32.00 ft**
Time After Drilling: **NA**
Depth to Water: **NA**

The stratification lines represent the approximate boundary between soil types; the actual transition may be gradual.

WANGENGINC 3140502.GPJ WANGENG.GDT 3/10/16

BORING LOG HA-08

Wang Engineering
wangeng@wangeng.com
1145 N Main Street
Lombard, IL 60148
Telephone: 630 953-9928
Fax: 530 953-9938

WEI Job No.: 314-05-02

Client: **Bowman, Barrett and Associates, Inc.**
Project: **Irving Park Rd. Bridge and Bike Path**
Location: **Chicago IL**

Datum: CCD
Elevation: 19.48 ft
North: 5014.43 ft
East: 9531.24 ft
Station: 203+65.38
Offset: 4.5 LT

Elevation (ft)	Depth (ft)	SOIL AND ROCK DESCRIPTION	Sample Type / recovery	Sample No.	SPT Values (bw/6 in)	Qu (tsf)	Moisture Content (%)
	0	Dark brown SILTY LOAM, trace gravel, frozen --FILL--	PUSH	1		NP	34
17.7		Brown SANDY LOAM, little gravel, brick and glass fragments; moist --FILL--	PUSH	2		NP	18
	5		PUSH	3		NP	20
14.0		Dark brown SILTY LOAM, trace gravel and brick fragments; moist --FILL--	PUSH	4		NP	20
11.7	10	Very stiff to hard, brown CLAY to SILTY CLAY, trace gravel	PUSH	5		>4.5 P	21
			PUSH	6		2.75 P	21
	15		PUSH	7		2.50 P	24
			PUSH	8		2.50 P	23
3.5		Boring terminated at 16.00 ft					
	20						
	25						

GENERAL NOTES

Begin Drilling: **01-21-2016** Complete Drilling: **01-21-2016**
Drilling Contractor: **Wang Engineering, Inc.** Drill Rig: **Geoprobe HA**
Driller: **F&D** Logger: **D. Kolpacki** Checked by: **C. Marin**
Drilling Method: **1" ID Pneumatic Geoprobe LB Sampler**

WATER LEVEL DATA

While Drilling: **DRY**
At Completion of Drilling: **DRY**
Time After Drilling: **NA**
Depth to Water: **NA**

The stratification lines represent the approximate boundary between soil types; the actual transition may be gradual.

WANGENGINC 3140502.GPJ WANGENG.GDT 3/10/16

...\IRW1-E5038-005-SB.dgn
11/29/2017 1:49:48 PM

DESIGN:				
DRAWN:				
CHECKED:				
APPROVED: DF				
DATE: 11/29/2017				
SCALE:				
FILE:	NO.	BY	DATE	DESCRIPTION
	REVISIONS			

KEY PLAN:

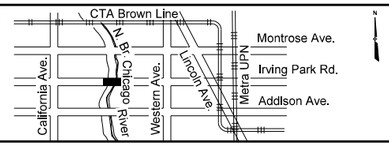

CDOT
CHICAGO DEPARTMENT OF TRANSPORTATION

BOWMAN, BARRETT & ASSOCIATES INC.
CONSULTING ENGINEERS
Chicago, Illinois
312.228.0100
www.bbandainc.com

W. IRVING PARK ROAD AT NORTH BRANCH CHICAGO RIVER

RETAINING WALL 1
SOIL BORINGS

PROJECT NO. E-5-038
DRAWING NO. RW–5
CONTRACT NO. XXXXX

TOTAL SHEETS	SHEET NO.
184	169

Bench Mark: Chiseled plus cut in north sidewalk along Irving Park Rd., approximately 400' west of S.N. 016-6082 West Abutment, Elevation 12.86.

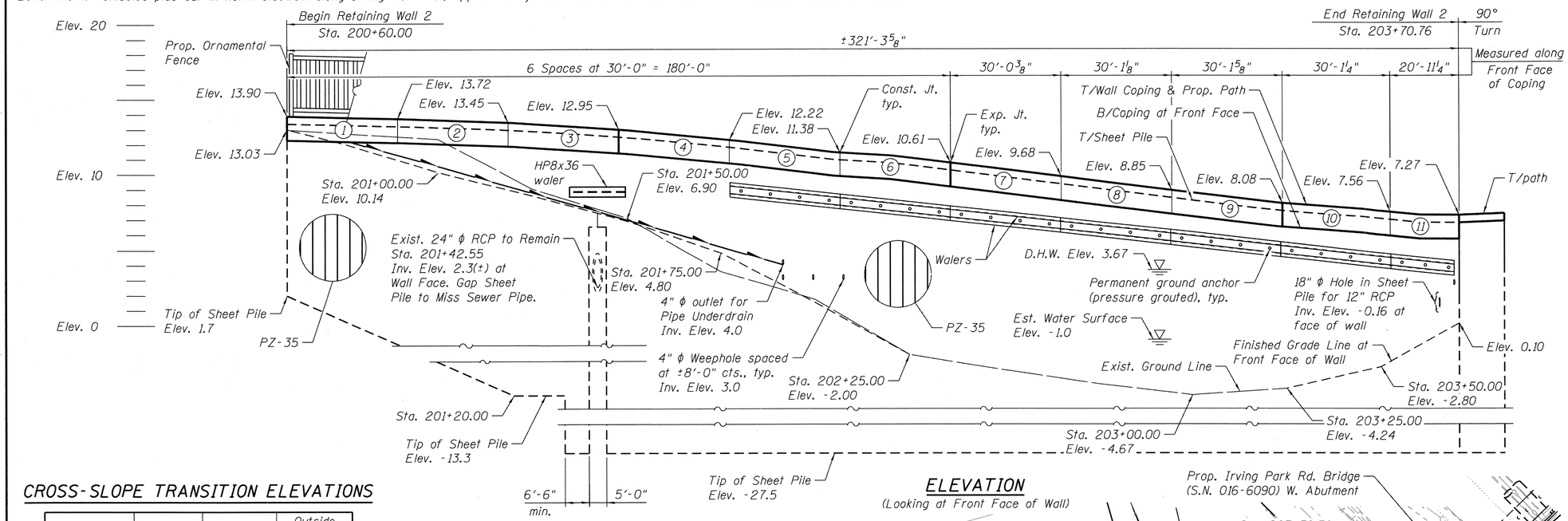

ELEVATION
(Looking at Front Face of Wall)

CROSS-SLOPE TRANSITION ELEVATIONS

Station	Slope	PGL Elev.	Outside EOP Elev.
202+05.00	-1.000	11.58	11.46
202+10.00	-0.333	11.42	11.38
202+15.00	0.333	11.27	11.31
202+20.00	1.000	11.11	11.23
203+45.48	1.000	7.55	7.67
203+50.48	0.333	7.49	7.53
203+55.48	-0.333	7.44	7.40
203+60.48	-1.000	7.41	7.29

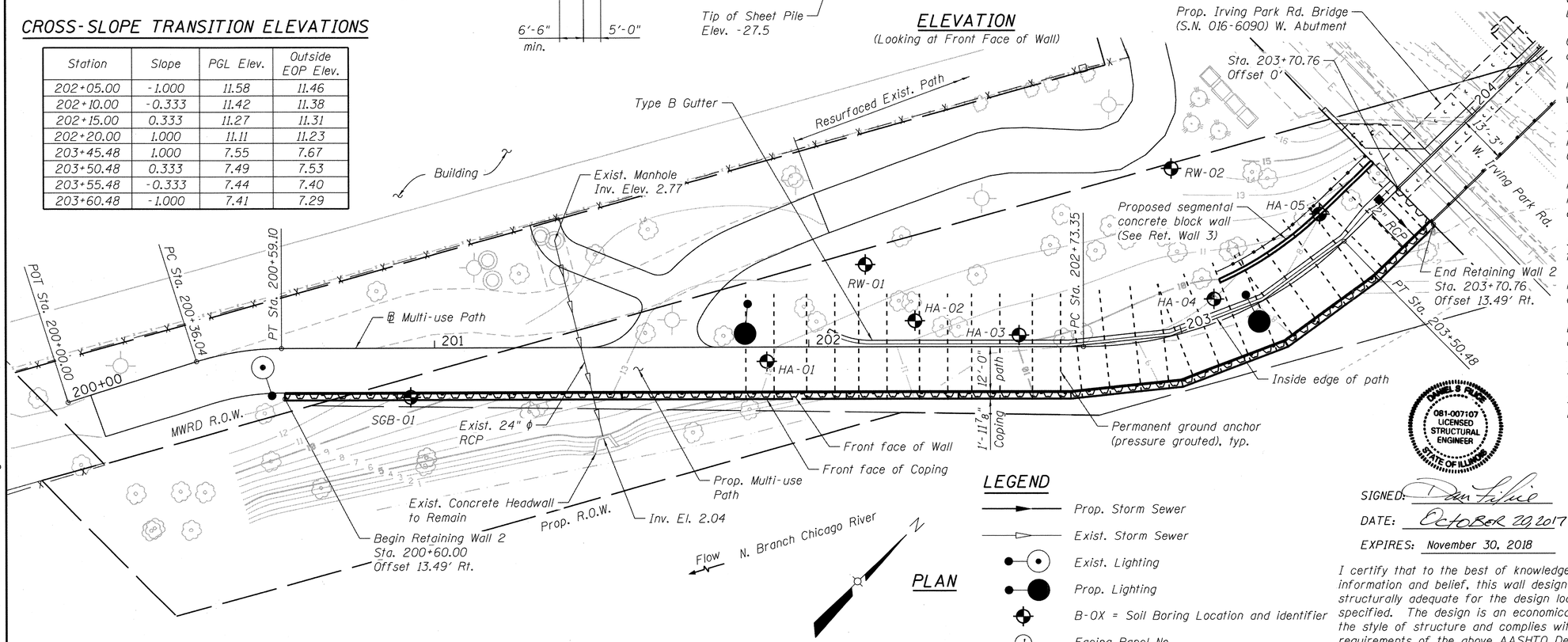

PLAN

LEGEND

- Prop. Storm Sewer
- Exist. Storm Sewer
- Exist. Lighting
- Prop. Lighting
- B-OX = Soil Boring Location and identifier
- (1) Facing Panel No.

DESIGN SPECIFICATIONS

2014 AASHTO LRFD Bridge Design Specifications, 7th Edition, with 2015 Interim Revisions

DESIGN STRESSES

FIELD UNITS

f'c = 4,000 psi High Performance Concrete
fy = 60,000 psi (Reinforcement)
fy = 50,000 psi (AASHTO M270 Grade 50) (Struct. Shapes)
fy = 50,000 psi (ASTM A690) (Sheet Piling)

SEISMIC DATA

Seismic Performance Zone (SPZ) = 1
Design Spectral Acceleration at 1.0 sec (S_{D1}) = 0.060g
Design Spectral Acceleration at 0.2 sec (S_{DS}) = 0.106g
Soil Site Class = C

LOADING

100 psf Live Load Surcharge or H-20 loading

GENERAL NOTES

All structural steel shall be Grade 50, and Sheet Piling shall be ASTM A690.

Reinforcement bars designated (E) shall be epoxy coated.

All exposed concrete edges shall have a 3/4" x 45° chamfer, except where shown otherwise. Chamfer on vertical edges shall be continued a minimum of one foot below finished ground level.

Contractor shall not scale dimensions from the plans for construction purposes.

No construction joints except those shown on the plans will be allowed unless approved by the engineer.

It shall be the contractor's responsibility to verify the location of all utilities prior to starting construction. Contact D.I.G.G.E.R., 312-744-7000.

Refer to drainage and utility plans and drainage profiles in the contract plan set for drainage structures, pipes, and pipe outlets in the vicinity of the retaining wall.

Stations and offsets of the wall are referenced to the front face of wall relative to ℄ prop. path.

Horizontal dimensions are measured along the front face of wall unless noted otherwise.

Bend horizontal bars in the field to fit at horizontal curves in the wall.

See Bridge Sheet S-1 for Waterway information.

See Architectural Plans for details of Prop. Ornamental Fence.

DANIEL S. FOLKS
081-007107
LICENSED STRUCTURAL ENGINEER
STATE OF ILLINOIS

SIGNED: Dan Folks
DATE: OCTOBER 20, 2017
EXPIRES: November 30, 2018

I certify that to the best of knowledge, information and belief, this wall design is structurally adequate for the design loading specified. The design is an economical one for the style of structure and complies with requirements of the above AASHTO Design Specifications.

Range 13E | Range 14E
3rd PM

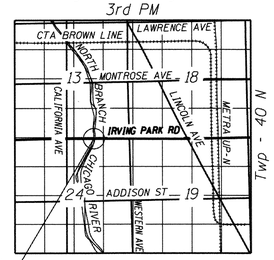

Proposed Structure

LOCATION SKETCH

DESIGN: CA				
DRAWN: MTR				
CHECKED:				
APPROVED: DF				
DATE: 10/20/2017				
SCALE:				
FILE:	NO.	BY	DATE	DESCRIPTION
	REVISIONS			

KEY PLAN:

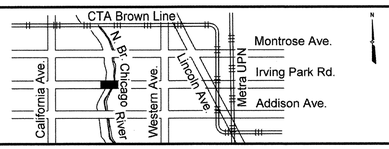

CDOT
CHICAGO DEPARTMENT OF TRANSPORTATION

BOWMAN, BARRETT & ASSOCIATES INC.
CONSULTING ENGINEERS
Chicago, Illinois
312.228.0100
www.bbandainc.com

W. IRVING PARK ROAD AT NORTH BRANCH CHICAGO RIVER

RETAINING WALL 2
GENERAL PLAN AND ELEVATION

PROJECT NO. E-5-038
DRAWING NO. RW-6
CONTRACT NO. XXXXX

...\RW2-E5038-001-GPE.dgn
11/6/2017 3:56:24 PM

TOTAL SHEETS	SHEET NO.
184	170

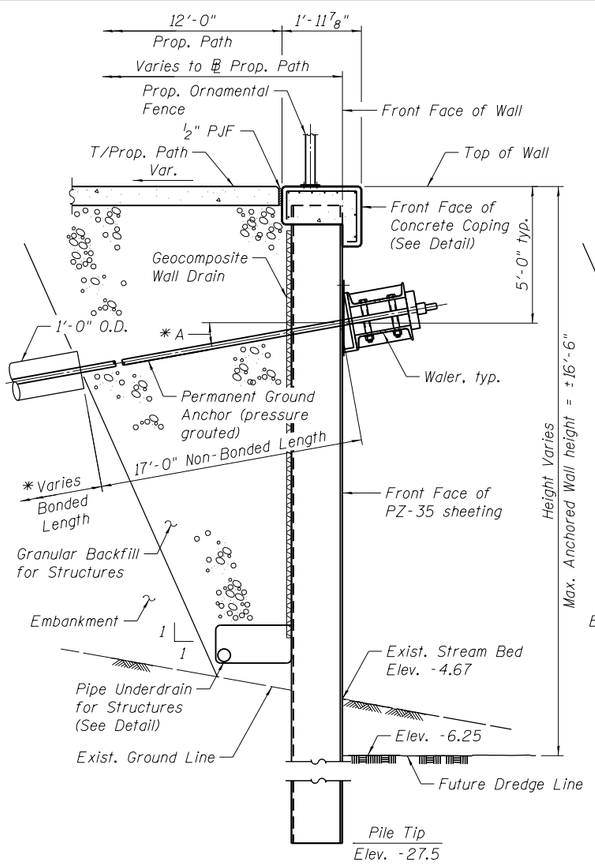

SECTION THRU WALL WITH GROUND ANCHORS

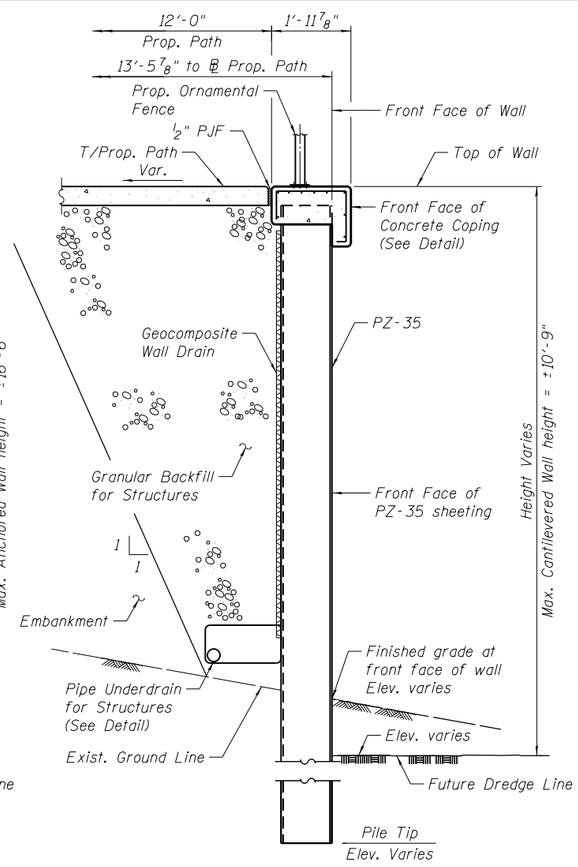

SECTION THRU CANTILEVERED WALL

PIPE UNDERDRAIN DETAIL

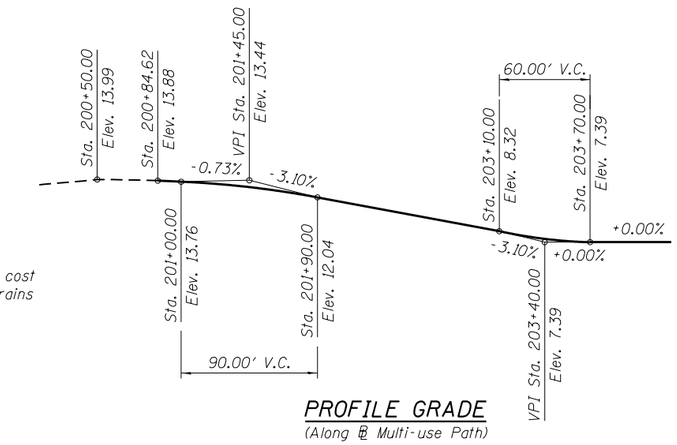

PROFILE GRADE

(Along ℄ Multi-use Path)

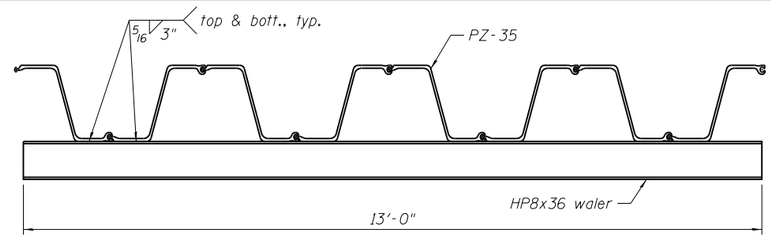

SECTION A-A

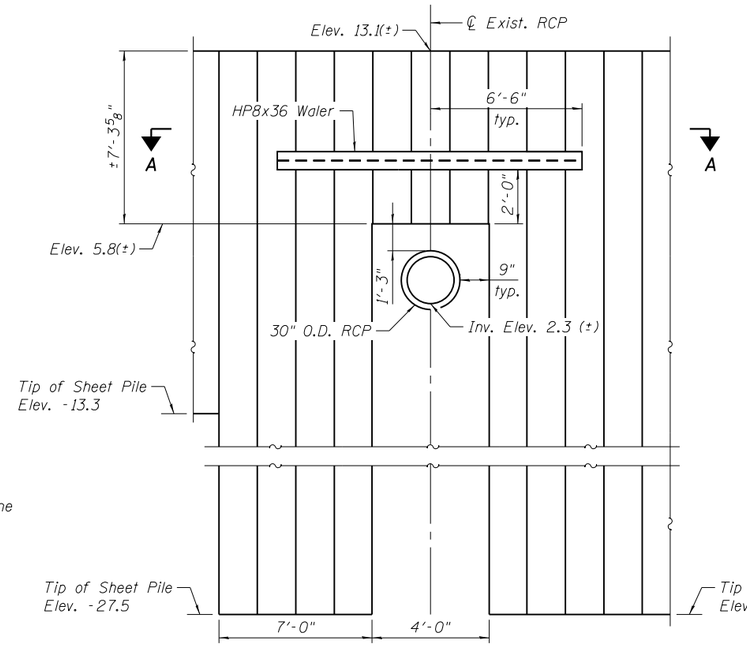

ELEVATION SHOWING GAP IN SHEET PILING

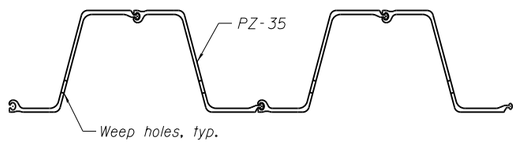

SECTION THRU SHEET PILING

CURVE DATA

(℄ Multi-use Path)

PROP. CURVE PR_PATH-1

PI Sta. = 200+47.66
Δ = 17° 37' 17" (RT)
D = 76° 23' 40"
R = 75.00'
T = 11.62'
L = 23.07'
E = 0.90'
P.C. Sta. = 200+36.04
P.T. Sta. = 200+59.10

PROP. CURVE PR_PATH-2

PI Sta. = 203+13.95
Δ = 44° 11' 41" (LT)
D = 57° 17' 45"
R = 100.00'
T = 40.60'
L = 77.13'
E = 7.93'
P.C. Sta. = 202+73.35
P.T. Sta. = 203+50.48

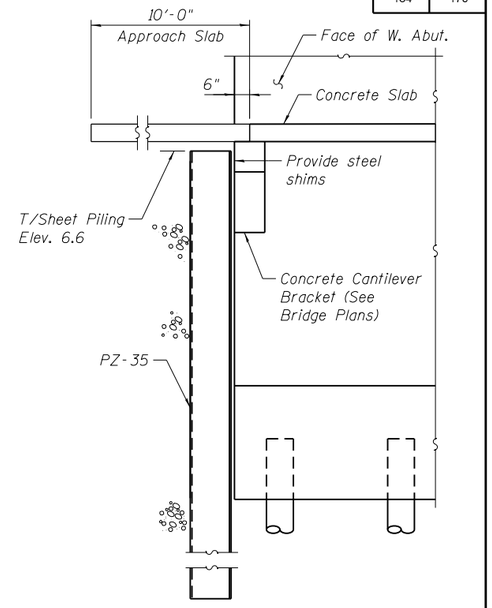

W. ABUTMENT INTERFACE ELEVATION

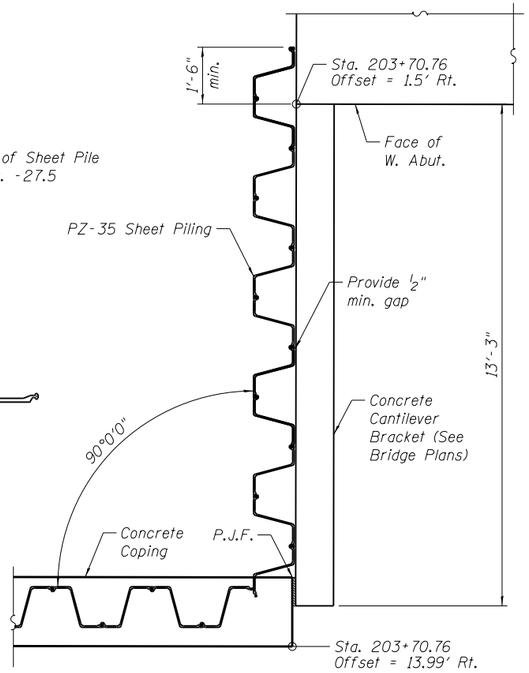

W. ABUTMENT INTERFACE PLAN

(Path not shown for clarity)

...\RW2-E5038-002-SECT.dgn
11/29/2017 1:50:03 PM

DESIGN: CA				
DRAWN: MTR				
CHECKED:				
APPROVED: DF				
DATE: 11/29/2017				
SCALE:				
FILE:	NO.	BY	DATE	DESCRIPTION
	REVISIONS			

KEY PLAN:

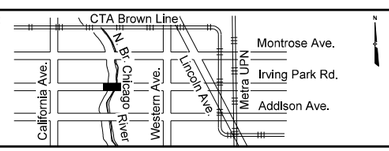

CDOT
CHICAGO DEPARTMENT OF TRANSPORTATION

BOWMAN, BARRETT & ASSOCIATES INC.
CONSULTING ENGINEERS
Chicago, Illinois
312.228.0100
www.bbandainc.com

W. IRVING PARK ROAD AT NORTH BRANCH CHICAGO RIVER

RETAINING WALL 2 SECTIONS AND DETAILS

PROJECT NO.
E-5-038
DRAWING NO.
RW-7
CONTRACT NO. XXXXX

TOTAL SHEETS	SHEET NO.
184	171

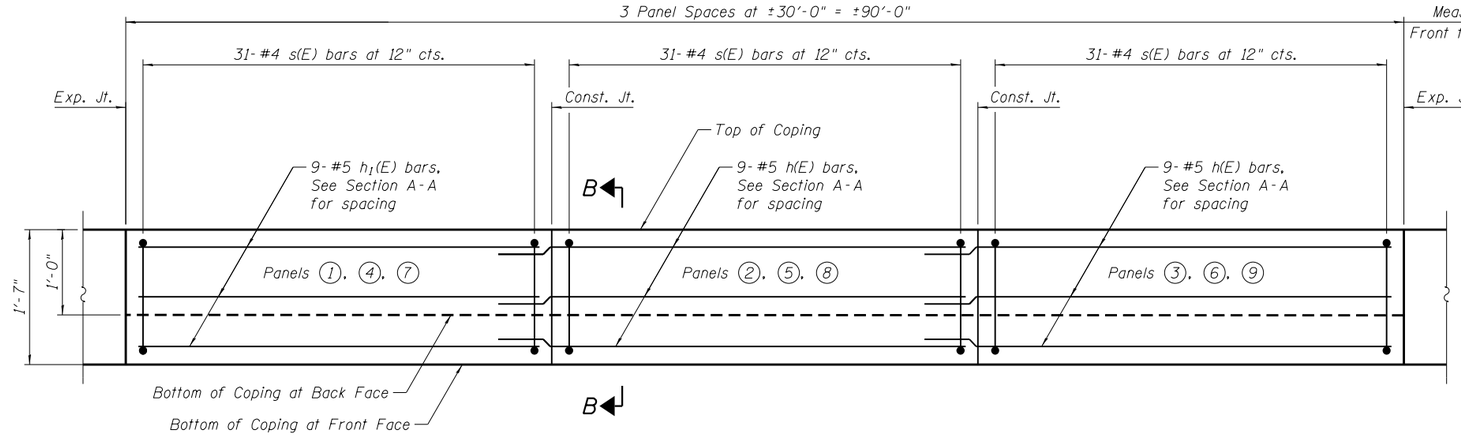

FRONT FACE ELEVATION

(Typical Coping Reinforcement)
(Panels 1-9)

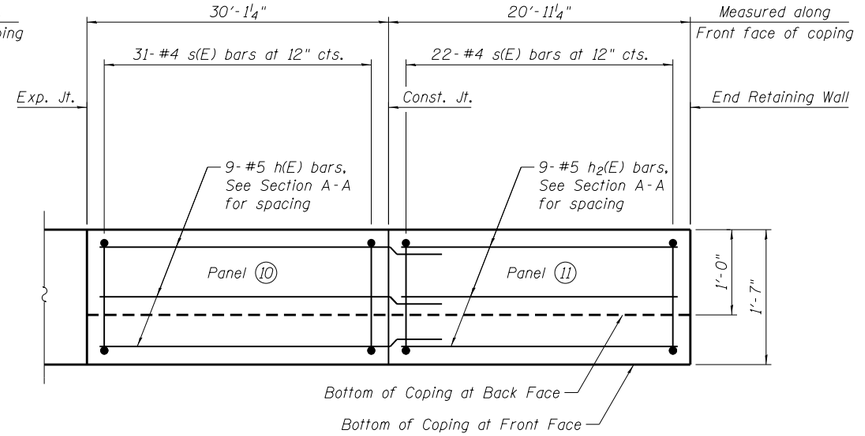

FRONT FACE ELEVATION

(End Coping Reinforcement)
(Panels 10-11)

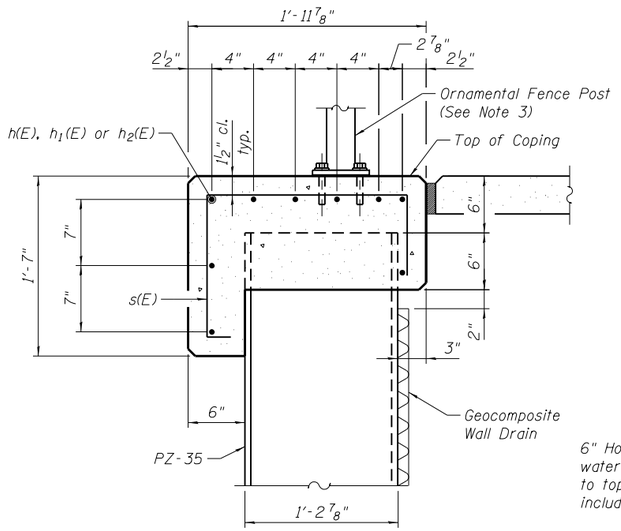

SECTION B-B

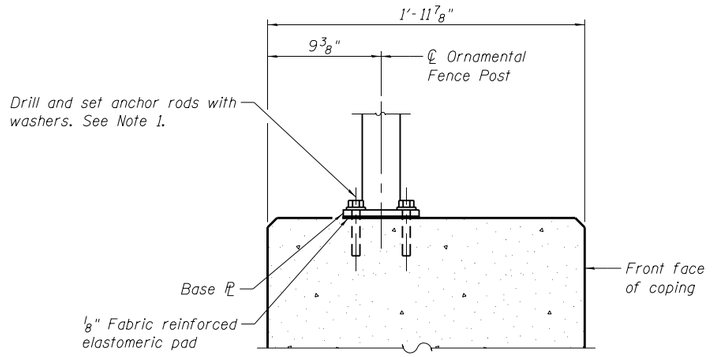

DETAIL A

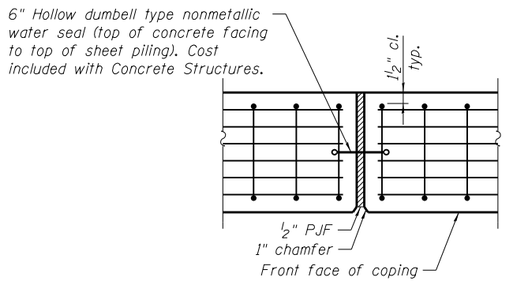

EXPANSION JOINT DETAIL IN COPING

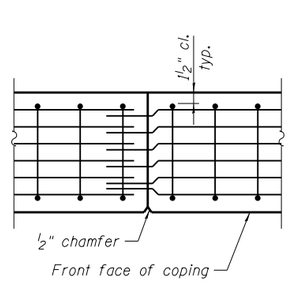

CONSTRUCTION JOINT DETAIL IN COPING

RETAINING WALL 2 BILL OF MATERIAL

Bar	No.	Size	Length	Shape
h(E)	63	#5	33'-5"	
h_1(E)	27	#5	29'-9"	
h_2(E)	9	#5	20'-7"	
s(E)	332	#4	4'-0"	

High Performance Concrete Structures	Cu. Yd.	26.8
Reinforcement Bars, Epoxy Coated	Pound	4,120
Geocomposite Wall Drain	Sq. Yd.	259
Pipe Underdrain for Structures, 4"	Foot	150
Permanent Sheet Piling	Sq. Ft.	11,100
Granular Backfill for Structures	Cu. Yd.	574
Permanent Ground Anchor	Each	27
Concrete Sealer	Sq. Ft.	1,310

NOTES

1. Base plate in addition to all materials and labor incidental to anchoring of the fence post shall be included in the cost of Ornamental Fence.
2. Apply Concrete Sealer to all exposed faces of concrete coping.
3. See drawing A-01 thru A-04 for ornamental fence details.

MIN BAR LAP

#5 = 3'-3"

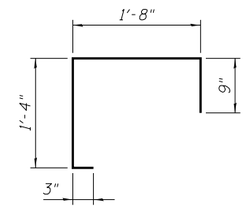

BAR s(E)

DESIGN:				
DRAWN:				
CHECKED:				
APPROVED: DF				
DATE: 11/29/2017				
SCALE:				
FILE:	NO.	BY	DATE	DESCRIPTION
	REVISIONS			

KEY PLAN:

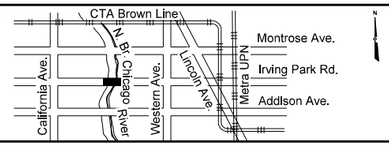

CDOT
CHICAGO DEPARTMENT OF TRANSPORTATION

BOWMAN, BARRETT & ASSOCIATES INC.
CONSULTING ENGINEERS
Chicago, Illinois
312.228.0100
www.bbandainc.com

W. IRVING PARK ROAD AT NORTH BRANCH CHICAGO RIVER

RETAINING WALL 2
CONCRETE COPING DETAILS

PROJECT NO.
E-5-038
DRAWING NO.
RW-8
CONTRACT NO. XXXXX

11/29/2017 1:50:05 PM ...\RW2-E5038-003-COP.dgn

TOTAL SHEETS	SHEET NO.
184	172

NOTES

1. See sheet RW-10 for detailed waler plan and elevation.
2. Stations and offsets are measured to the front face of concrete coping.

GROUND ANCHOR WALL CONSTRUCTION PROCEDURE

1. Drive permanent sheet piles.
2. Place backfill to tie elevation (Do not backfill above tie elevation). If required install walers and ground anchors. Any excavation required will be included in the cost of Permanent Ground Anchor. Prestressing sequence shall be arranged to provide uniform pressure to sheeting. Such a sequence shall be provided by ground anchor supplier for system chosen.
3. After installing and performance/proof testing the ground anchors, backfill remaining portion behind the wall to the proposed finished grade with Granular Backfill for Structures or embankment as shown in the typical section on sheet RW-7.
4. The Contractor shall use extreme caution to not damage the ground anchors during backfill operations. Any damage shall be repaired by the Contractor in a manner satisfactory to the Commissioner at the Contractor's expense.

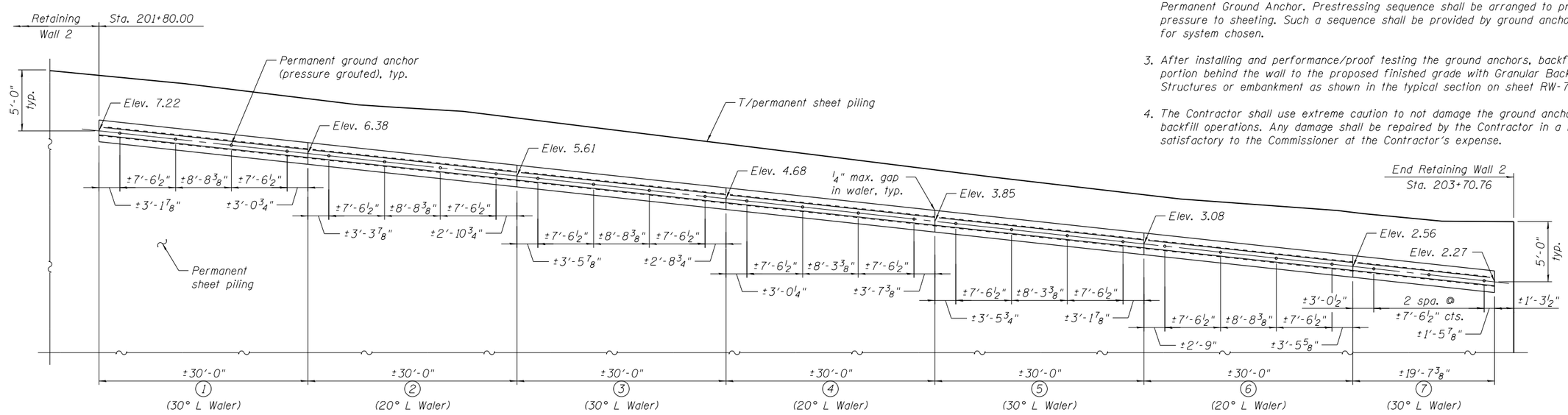

LEGEND

(1) Waler Segment No.

[1] Ground Anchor No.

GENERAL WALER ELEVATION

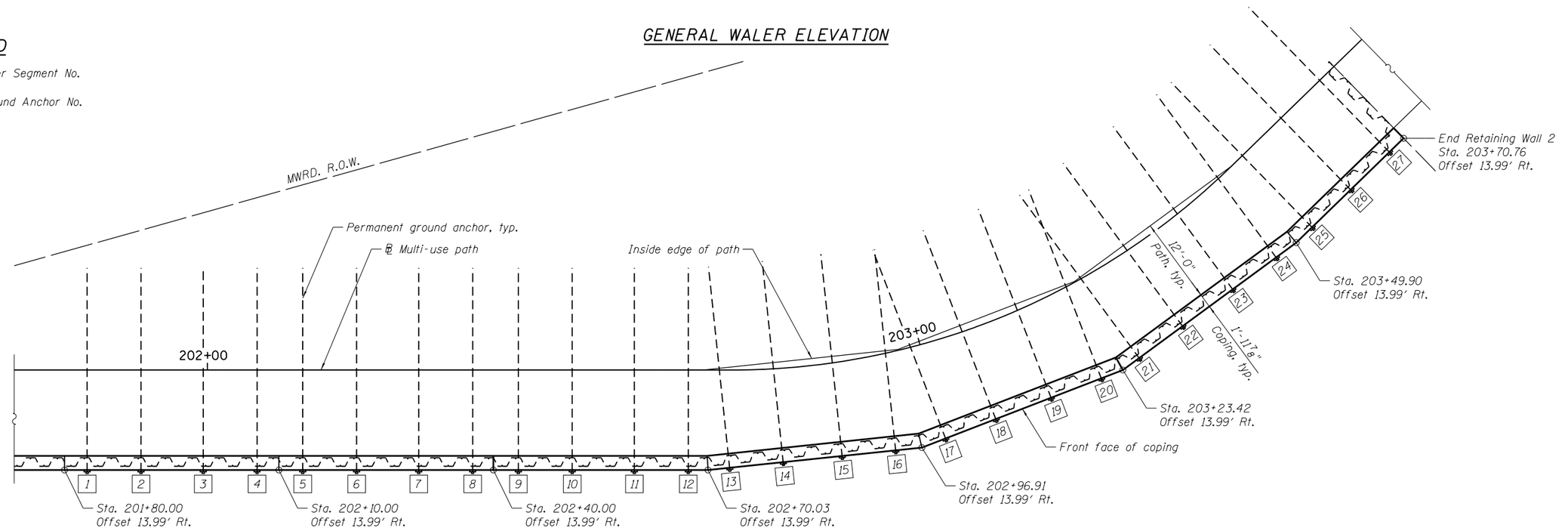

GENERAL ANCHORED WALL PLAN

DESIGN:	CA			
DRAWN:	LAM			
CHECKED:	IYL			
APPROVED:	DF			
DATE:	11/29/2017			
SCALE:				
FILE:	NO.	BY	DATE	DESCRIPTION
	REVISIONS			

KEY PLAN:

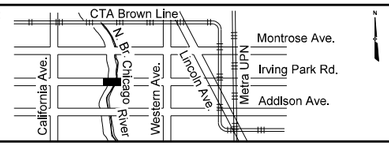

CDOT
CHICAGO DEPARTMENT OF TRANSPORTATION

BOWMAN, BARRETT & ASSOCIATES INC.
CONSULTING ENGINEERS
Chicago, Illinois
312.228.0100
www.bbandainc.com

W. IRVING PARK ROAD AT NORTH BRANCH CHICAGO RIVER

RETAINING WALL 2
WALER DETAILS I

PROJECT NO.	E-5-038
DRAWING NO.	RW–9
CONTRACT NO.	XXXXX

...\RW2-E5038-004-WAL1.dgn
11/29/2017 1:50:08 PM

TOTAL SHEETS	SHEET NO.
184	173

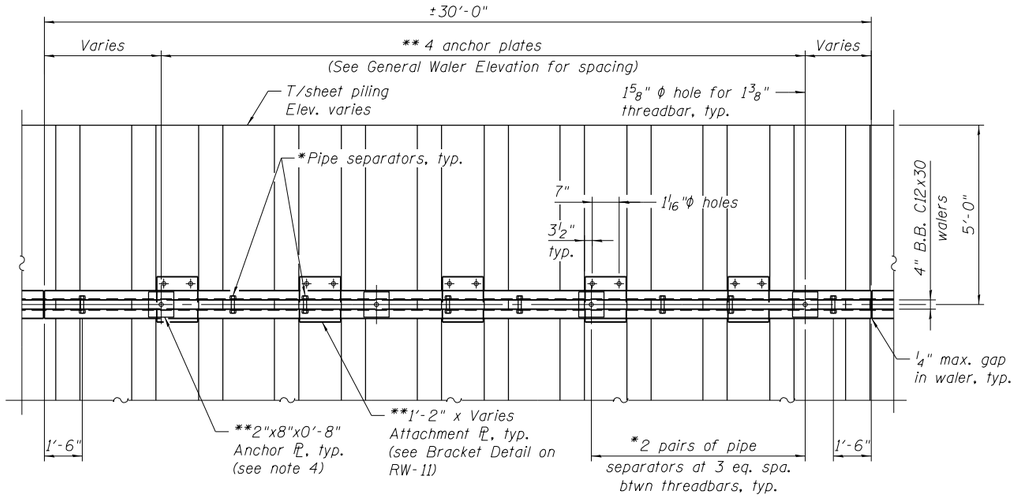

DETAILED WALER ELEVATION FOR TYPICAL SECTION

(Applies to waler segments 1 thru 6)

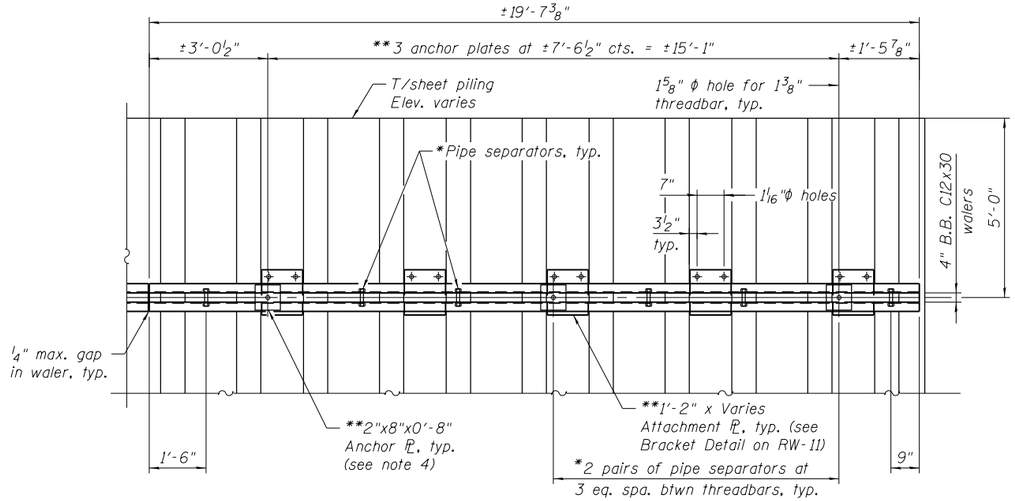

DETAILED WALER ELEVATION FOR END SECTION

(Applies to waler segment 7)

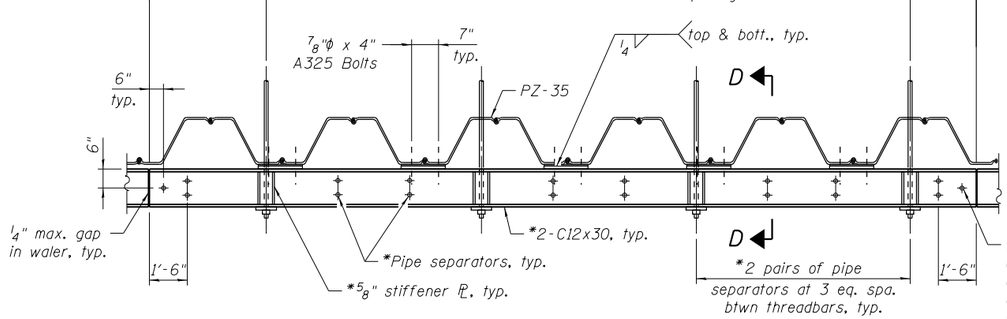

DETAILED WALER PLAN FOR TYPICAL SECTION

(Applies to waler segments 1 thru 6)

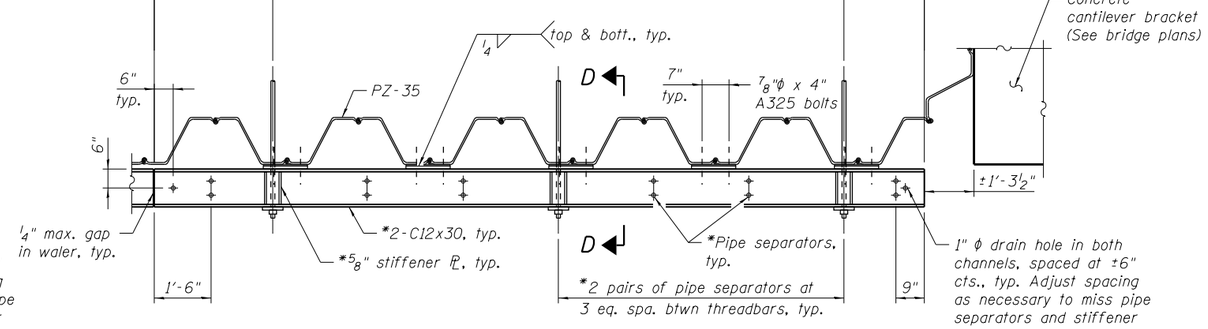

DETAILED WALER PLAN FOR END SECTION

(Applies to waler segment 7)

NOTES

1. Sheet pile shall be PZ-35 ASTM Gr. 50 with effective section modulus 48.5 in³ or equivalent.
2. All walers, anchor plates, stiffener plates, and brackets shall be ASTM A572 Gr. 50.
3. Plates, nuts, washers, bolts, pipe separators, brackets, plate stiffeners, and walers shall be galvanized.
4. Contractor to verify dimensions with DYWIDAG representative.
5. Cost of items and work required as indicated by (*) shall be included in the cost of Permanent Sheet Piling. Cost of items and work required as indicated by (**) shall be included with the cost of Permanent Ground Anchor.
6. For Section D-D and anchor plate details see sheet RW-11.

...\RW2-E5038-005-WAL2.dgn
11/29/2017 1:50:10 PM

DESIGN: CA				
DRAWN: LAM				
CHECKED: IYL				
APPROVED: DF				
DATE: 11/29/2017				
SCALE:				
FILE:	NO.	BY	DATE	DESCRIPTION
	REVISIONS			

KEY PLAN:

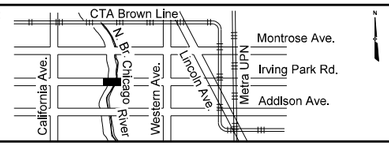

CDOT
CHICAGO DEPARTMENT OF TRANSPORTATION

BOWMAN, BARRETT & ASSOCIATES INC.
CONSULTING ENGINEERS
Chicago, Illinois
312.228.0100
www.bbandainc.com

W. IRVING PARK ROAD AT NORTH BRANCH CHICAGO RIVER

RETAINING WALL 2 WALER DETAILS II

PROJECT NO. E-5-038
DRAWING NO. RW–10
CONTRACT NO. XXXXX

TOTAL SHEETS	SHEET NO.
184	174

ANCHOR NO.: _____
DESIGN LOAD: _____

PERFORMANCE TEST DATA

% DL	LOAD	PRESS.	DIAL	DEFL.	% DL	LOAD	PRESS.	DIAL	DEFL.
AL					AL				
25 •					25				
AL					50				
25					75				
50 •					100				
AL					120 •				
25					AL				
50					25				
75 •					50				
AL					75				
25					100				
50					120				
75					133 •				
100 •					L.O.				

PERFORMANCE TEST REMARKS:

AL = Alignment Load, See PT. 2 Of Test Procedure
DL = Anchor Design Load, See Schedule This Sheet
* Graph Required, See PT. 7 Of Test Procedure
L.O. = Lock-Off Load, See PT. 6 Of Test Procedure

ANCHOR NO.: _____
DESIGN LOAD: _____

PROOF TEST DATA

% DL	LOAD	PRESS.	DIAL	DEFL.	REMARKS
AL					
25					
50					
75					
100					
120					
133					
L.O.					

GROUND ANCHOR SCHEDULE

ANCHOR NO.	ANGLE 'A'	ANCHOR DESIGN LOAD (KIPS)	MIN. BOND LENGTH (FT.)
1-4, 9-12, 17-20, 25-27	30°	100	16
5-8, 13-16, 21-24	20°	90	15

NOTES

1. All $1\frac{3}{8}$" dia. prestressing steel threadbar shall be ASTM A722, Gr. 150.
2. Threadbar shall have DYWIDAG double corrosion protection (Dcp) or equivalent.
3. Tie rods shall be extended using bar couplers if needed.
4. Cost of items and work required as indicated by (*) shall be included in the cost of Permanent Sheet Piling. Cost of items and work required as indicated by (**) shall be included with the cost of Permanent Ground Anchor.
5. See sheet RW-10 for detailed waler plan and elevation. See sheet RW-9 for ground anchor construction procedure.
6. Contractor to verify dimensions with DYWIDAG representative.
7. Plates, nuts, washers, bolts, pipe separators, brackets, plate stiffeners, and walers shall be galvanized.
8. Permanent ground anchors shall be pressure grouted.
9. See Special Provision "Permanent Ground Anchors" for information on performance and proof testing of ground anchors.

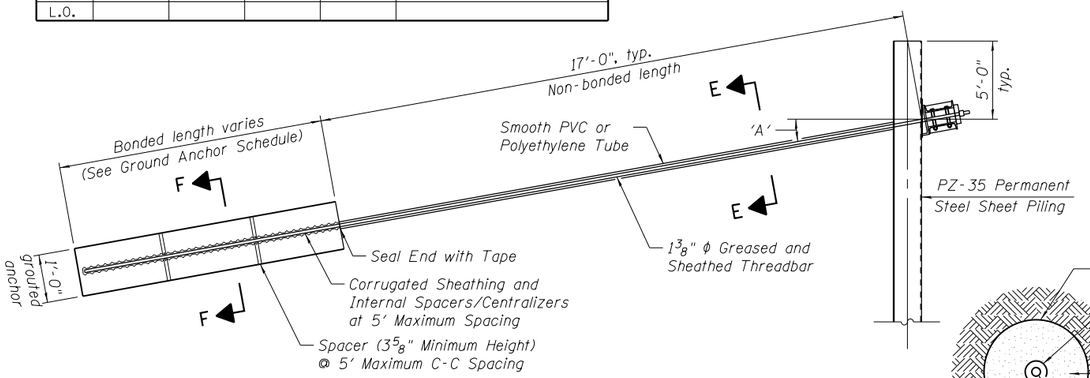

SHEET-PILE WALL WITH GROUND ANCHOR

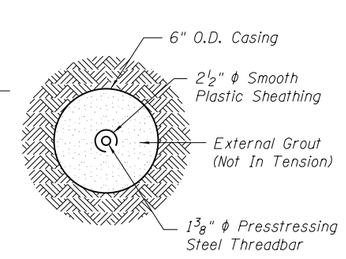

SECTION E-E

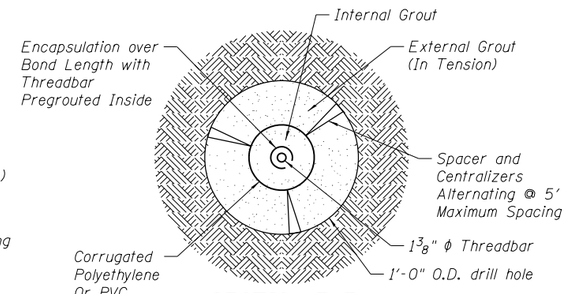

SECTION F-F

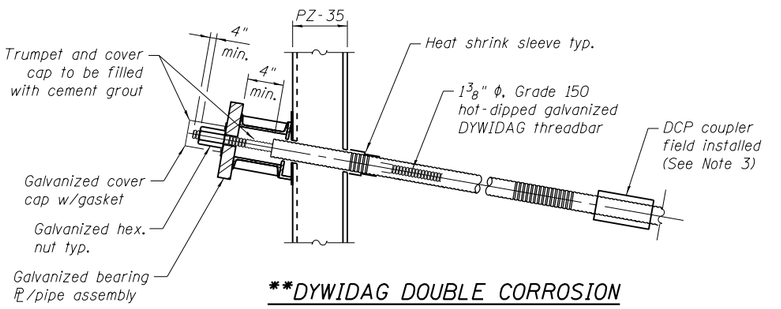

**DYWIDAG DOUBLE CORROSION PROTECTION DETAIL

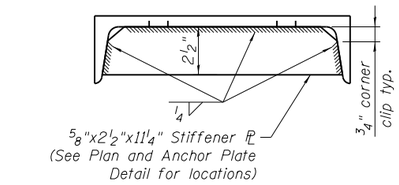

Note A:
One potential threadbar hole location is shown. Bracket assembly is symmetrical about ℄ attachment PL and angled bracket, and therefore the threadbar hole location can be mirrored about the ℄ as required. For locations without a threadbar, use bracket assembly as shown without the $1\frac{5}{8}$"ϕ threadbar hole. See sheet RW-9 for threadbar locations.

*WALER CHANNEL DETAIL

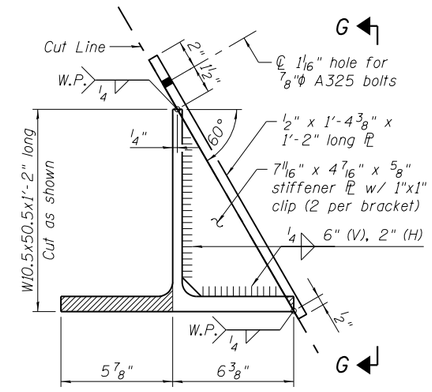

BRACKET DETAIL FOR 30° ANCHORS

(29 required)

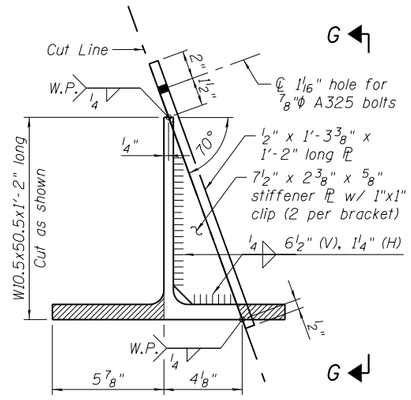

BRACKET DETAIL FOR 20° ANCHORS

(24 required)

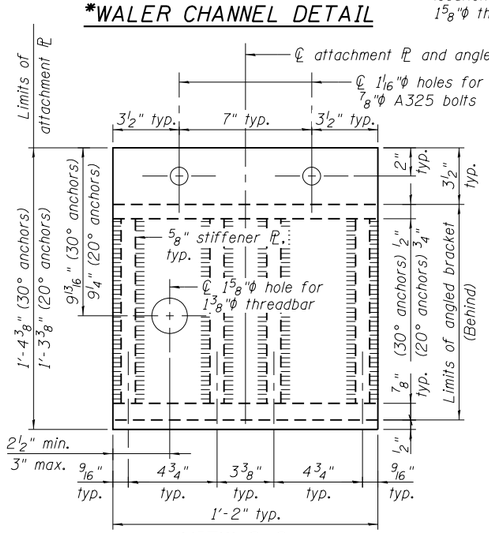

VIEW G-G

(See Note A)

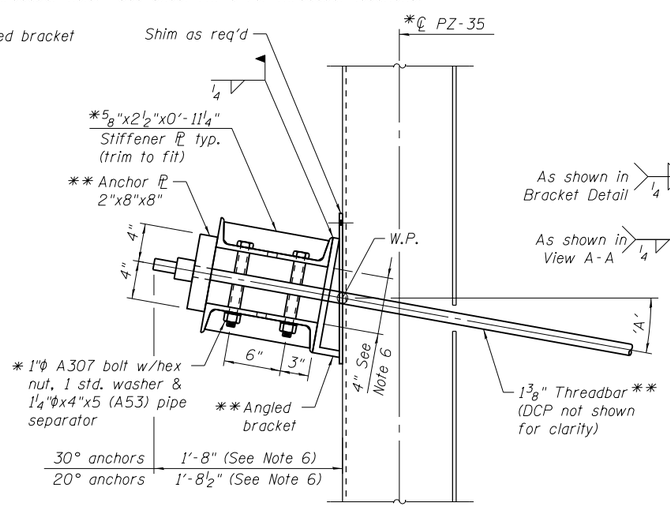

SECTION D-D (TIE-RODS)

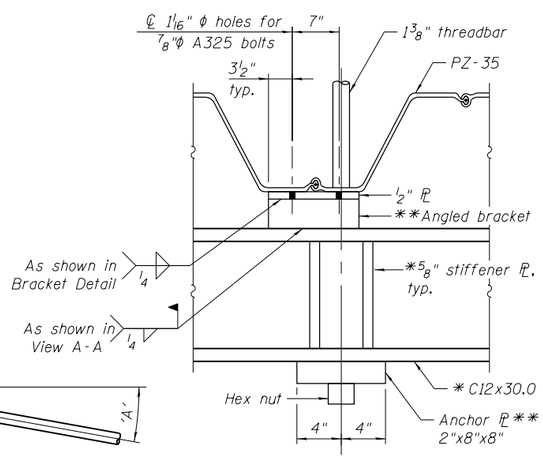

**ANCHOR PLATE DETAIL

DESIGN:	CA				
DRAWN:	LAM				
CHECKED:	IYL				
APPROVED:	DF				
DATE:	11/29/2017				
SCALE:					
FILE:		NO.	BY	DATE	DESCRIPTION
		REVISIONS			

KEY PLAN:

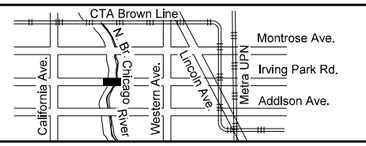

CDOT
CHICAGO DEPARTMENT OF TRANSPORTATION

BOWMAN, BARRETT & ASSOCIATES INC.
CONSULTING ENGINEERS
Chicago, Illinois
312.228.0100
www.bbandainc.com

W. IRVING PARK ROAD AT NORTH BRANCH CHICAGO RIVER

RETAINING WALL 2
GROUND ANCHOR DETAILS

PROJECT NO.
E-5-038
DRAWING NO.
RW–11
CONTRACT NO. XXXXX

...\RW2-E5038-006-ANCH.dgn
11/29/2017 1:50:13 PM

TOTAL SHEETS	SHEET NO.
184	175

Wang Engineering
wangeng@wangeng.com
1145 N Main Street
Lombard, IL 60148
Telephone: 630 953-9928
Fax: 630 953-9938

BORING LOG SGB-01

WEI Job No.: 314-05-02

Client: **Bowman, Barrett and Associates, Inc.**
Project: **Irving Park Rd. Bridge and Bike Path**
Location: **Chicago IL**

Datum: CCD
Elevation: 12.73 ft
North: 4672.67 ft
East: 9382.21 ft
Station: 207+63.65
Offset: 26.52 LT

Depth (ft)	Elevation (ft)	SOIL AND ROCK DESCRIPTION	Sample Type / recovery	Sample No.	SPT Values (blw/6 in)	Qu (tsf)	Moisture Content (%)
	12.3	5-inch dark brown SILTY LOAM --TOPSOIL--					
	11.0	Loose, brown SANDY LOAM, little gravel; moist --FILL--		1	2 2 1 3	NP	21
		Very stiff, brown and gray SILTY CLAY, trace gravel --FILL--		2	2 3 3 5	2.25 P	27
5				3	2 3 5 8	3.28 B	24
	7.0	Very stiff to hard, gray CLAY		4	6 8 10 12	3.94 B	21
	2.7			5	3 4 6 11	4.59 B	21
10		Boring terminated at 10.00 ft					
15							
20							
25							

GENERAL NOTES

Begin Drilling: **12-23-2015** Complete Drilling: **12-23-2015**
Drilling Contractor: **Wang Testing Services** Drill Rig: **D-25 ATV**
Driller: **K&K** Logger: **D. Kolpacki** Checked by: **C. Marin**
Drilling Method: **2.25" ID HSA; Borehole grouted upon completion.**

WATER LEVEL DATA

While Drilling: **DRY**
At Completion of Drilling: **DRY**
Time After Drilling: **NA**
Depth to Water: **NA**

The stratification lines represent the approximate boundary between soil types; the actual transition may be gradual.

WANGENGINC 314302.GPJ WANGENG.GDT 3/10/16

Wang Engineering
wangeng@wangeng.com
1145 N Main Street
Lombard, IL 60148
Telephone: 630 953-9928
Fax: 630 953-9938

BORING LOG HA-01

WEI Job No.: 314-05-02

Client: **Bowman, Barrett and Associates, Inc.**
Project: **Irving Park Rd. Bridge and Bike Path**
Location: **Chicago IL**

Datum: CCD
Elevation: 6.42 ft
North: 4747.33 ft
East: 9441.93 ft
Station: 206+60.43
Offset: 11.47 LT

Depth (ft)	Elevation (ft)	SOIL AND ROCK DESCRIPTION	Sample Type / recovery	Sample No.	SPT Values (blw/6 in)	Qu (tsf)	Moisture Content (%)
	6.3	1-inch thick, black SILTY CLAY LOAM --TOPSOIL--		1	PUSH	2.00 P	23
		Stiff to very stiff, brown and gray SILTY CLAY, trace gravel and organic matter --FILL--		2	PUSH	3.00 P	22
5				3	PUSH	3.00 P	21
	-0.6	--glass fragments--		4	PUSH	1.00 P	28
	-1.4	Stiff, brown CLAY		5	PUSH	1.50 P	23
	-3.1	Stiff, gray SILTY LOAM, trace gravel; moist --L_L(%)=26, P_L(%)=17-- --%Gravel=4.2-- --%Sand=25.9-- --%Silt=52.9-- --%Clay=17.0-- --A-4(4)--		6	PUSH	2.00 P	18
10	-3.6	GRAVEL; wet		7	PUSH	0.50 P	22
		Stiff to very stiff, brown and gray CLAY to SILTY CLAY, trace gravel		8	PUSH	1.50 P	20
15	-9.6						
		Boring terminated at 16.00 ft					
20							
25							

GENERAL NOTES

Begin Drilling: **12-17-2015** Complete Drilling: **12-17-2015**
Drilling Contractor: **Wang Engineering, Inc.** Drill Rig: **Geoprobe HA**
Driller: **E&A** Logger: **J. Rowells** Checked by: **C. Marin**
Drilling Method: **1" ID Pneumatic Geoprobe LB Sampler**

WATER LEVEL DATA

While Drilling: **9.50 ft**
At Completion of Drilling: **NA**
Time After Drilling: **NA**
Depth to Water: **NA**

The stratification lines represent the approximate boundary between soil types; the actual transition may be gradual.

WANGENGINC 314302.GPJ WANGENG.GDT 3/10/16

...\RW2-E5038-007-SB.dgn
11/29/2017 1:50:16 PM

DESIGN:				
DRAWN: MTR				
CHECKED:				
APPROVED: DF				
DATE: 11/29/2017				
SCALE:				
FILE:	NO.	BY	DATE	DESCRIPTION
	REVISIONS			

KEY PLAN:

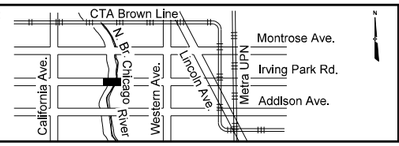

CDOT
CHICAGO DEPARTMENT OF TRANSPORTATION

BOWMAN, BARRETT & ASSOCIATES INC.
CONSULTING ENGINEERS
Chicago, Illinois
312.228.0100
www.bbandainc.com

W. IRVING PARK ROAD AT NORTH BRANCH CHICAGO RIVER

RETAINING WALL 2
SOIL BORINGS I

PROJECT NO. E-5-038
DRAWING NO. RW–12
CONTRACT NO. XXXXX

Wang Engineering

wangeng@wangeng.com
1145 N Main Street
Lombard, IL 60148
Telephone: 630 953-9928
Fax: 630 953-9938

BORING LOG HA-02

WEI Job No.: 314-05-02

Client: **Bowman, Barrett and Associates, Inc.**
Project: **Irving Park Rd. Bridge and Bike Path**
Location: **Chicago IL**

Datum: CCD
Elevation: 6.32 ft
North: 4783.27 ft
East: 9461.79 ft
Station: 202+28.36
Offset: 6.97 LT

Profile	Elevation (ft)	SOIL AND ROCK DESCRIPTION	Depth (ft)	Sample Type / recovery	Sample No.	SPT Values (blw/6 in)	Qu (tsf)	Moisture Content (%)
	5.6	9-inch thick, black SILTY CLAY LOAM			1	PUSH	1.00 P	18
		--TOPSOIL--						
		Stiff to very stiff, brown and gray SILTY CLAY, trace gravel			2	PUSH	3.00 P	18
	3.6	--FILL--						
		Stiff, gray CLAY	5		3	PUSH	1.50 P	24
					4	PUSH	1.00 P	32
	-1.7	--saturated SILT layer--						
		Soft to stiff, gray CLAY to SILTY CLAY, trace gravel			5	PUSH	0.75 P	18
			10		6	PUSH	0.25 P	23
					7	PUSH	1.00 P	22
	-7.7	Boring terminated at 14.00 ft						
			15					
			20					
			25					

GENERAL NOTES

Begin Drilling: **12-17-2015** Complete Drilling: **12-17-2015**
Drilling Contractor: **Wang Engineering, Inc.** Drill Rig: **Geoprobe HA**
Driller: **E&A** Logger: **J. Rowells** Checked by: **C. Marin**
Drilling Method: **1" ID Pneumatic Geoprobe LB Sampler**

WATER LEVEL DATA

While Drilling: **8.00 ft**
At Completion of Drilling: **NA**
Time After Drilling: **NA**
Depth to Water: **NA**

The stratification lines represent the approximate boundary between soil types; the actual transition may be gradual.

WANGENGINC 314502.GPJ WANGENG.GDT 7/19/16

Wang Engineering

wangeng@wangeng.com
1145 N Main Street
Lombard, IL 60148
Telephone: 630 953-9928
Fax: 630 953-9938

BORING LOG HA-03

WEI Job No.: 314-05-02

Client: **Bowman, Barrett and Associates, Inc.**
Project: **Irving Park Rd. Bridge and Bike Path**
Location: **Chicago IL**

Datum: CCD
Elevation: 2.27 ft
North: 4800.50 ft
East: 9483.93 ft
Station: 202+56.16
Offset: 3.13 LT

Profile	Elevation (ft)	SOIL AND ROCK DESCRIPTION	Depth (ft)	Sample Type / recovery	Sample No.	SPT Values (blw/6 in)	Qu (tsf)	Moisture Content (%)
	2.2	1-inch thick, black SILTY CLAY LOAM			1	PUSH	1.50 P	22
		--TOPSOIL--						
		Stiff to very stiff, brown and gray SILTY CLAY, trace gravel			2	PUSH	2.00 P	18
		--FILL--	5		3	PUSH	2.00 P	25
	-5.2				4	PUSH	1.50 P	20
	-5.7	GRAVEL; wet						
		Very soft, brown and gray SILTY CLAY LOAM			5	PUSH	0.25 P	32
			10		6	PUSH	0.25 P	22
	-8.6	Stiff, gray CLAY to SILTY CLAY, trace gravel						
		--L_L(%)=38, P_L(%)=18--			7	PUSH	1.50 P	23
		--%Gravel=2.8--						
		--%Sand=10.2--						
		--%Silt=47.2--						
	-11.7	--%Clay=39.7--						
		--A-6(17)--	15					
		Boring terminated at 14.00 ft						
			20					
			25					

GENERAL NOTES

Begin Drilling: **12-17-2015** Complete Drilling: **12-17-2015**
Drilling Contractor: **Wang Engineering, Inc.** Drill Rig: **Geoprobe HA**
Driller: **E&A** Logger: **J. Rowells** Checked by: **C. Marin**
Drilling Method: **1" ID Pneumatic Geoprobe LB Sampler**

WATER LEVEL DATA

While Drilling: **8.00 ft**
At Completion of Drilling: **NA**
Time After Drilling: **NA**
Depth to Water: **NA**

The stratification lines represent the approximate boundary between soil types; the actual transition may be gradual.

WANGENGINC 314502.GPJ WANGENG.GDT 7/19/16

...\RW2-E5038-008-SB2.dgn
11/29/2017 1:50:26 PM

DESIGN:				
DRAWN: MTR				
CHECKED:				
APPROVED: DF				
DATE: 11/29/2017				
SCALE:				
FILE:	NO.	BY	DATE	DESCRIPTION
	REVISIONS			

KEY PLAN:

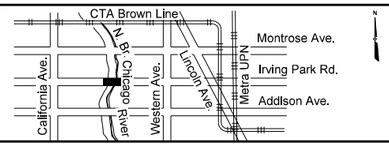

CDOT
CHICAGO DEPARTMENT OF TRANSPORTATION

BOWMAN, BARRETT & ASSOCIATES INC.
CONSULTING ENGINEERS
Chicago, Illinois
312.228.0100
www.bbandainc.com

W. IRVING PARK ROAD AT NORTH BRANCH CHICAGO RIVER

RETAINING WALL 2
SOIL BORINGS II

PROJECT NO. E-5-038
DRAWING NO. RW–13
CONTRACT NO. XXXXX

TOTAL SHEETS	SHEET NO.
184	177

Wang Engineering
wangeng@wangeng.com
1145 N Main Street
Lombard, IL 60148
Telephone: 630 953-9928
Fax: 630 953-9938

BORING LOG HA-04

WEI Job No.: 314-05-02

Client: **Bowman, Barrett and Associates, Inc.**
Project: **Irving Park Rd. Bridge and Bike Path**
Location: **Chicago IL**

Datum: CCD
Elevation: 2.57 ft
North: 4844.54 ft
East: 9513.38 ft
Station: 203+11.42
Offset: 6.06 LT

Profile	Elevation (ft)	SOIL AND ROCK DESCRIPTION	Depth (ft)	Sample Type / recovery	Sample No.	SPT Values (blw/6 in)	Qu (tsf)	Moisture Content (%)
	1.8	10-inch thick, black SILTY LOAM --TOPSOIL--						
		Stiff to very stiff, brown SILTY CLAY LOAM, trace gravel --FILL--			1	PUSH	1.50 P	28
					2	PUSH	2.75 P	21
	-1.4	Very stiff, brown CLAY	5		3	PUSH	2.00 P	25
	-3.2	Medium stiff to stiff, gray SILTY CLAY to SILTY CLAY LOAM, trace gravel			4	PUSH	0.75 P	18
					5	PUSH	0.50 P	17
			10		6	PUSH	0.75 P	23
					7	PUSH	0.75 P	23
			15		8	PUSH	1.25 P	23
	-13.4	Boring terminated at 16.00 ft						
			20					
			25					

GENERAL NOTES

Begin Drilling: **01-15-2016** Complete Drilling: **01-15-2016**
Drilling Contractor: **Wang Engineering, Inc.** Drill Rig: **Geoprobe HA**
Driller: **F&J** Logger: **F. Bozga** Checked by: **C. Marin**
Drilling Method: **1" ID Pneumatic Geoprobe LB Sampler**

WATER LEVEL DATA

While Drilling: **DRY**
At Completion of Drilling: **DRY**
Time After Drilling: **NA**
Depth to Water: **NA**

The stratification lines represent the approximate boundary between soil types; the actual transition may be gradual.

Wang Engineering
wangeng@wangeng.com
1145 N Main Street
Lombard, IL 60148
Telephone: 630 953-9928
Fax: 630 953-9938

BORING LOG HA-05

WEI Job No.: 314-05-02

Client: **Bowman, Barrett and Associates, Inc.**
Project: **Irving Park Rd. Bridge and Bike Path**
Location: **Chicago IL**

Datum: CCD
Elevation: 7.22 ft
North: 4880.77 ft
East: 9516.78 ft
Station: 203+50.95
Offset: 9.79 LT

Profile	Elevation (ft)	SOIL AND ROCK DESCRIPTION	Depth (ft)	Sample Type / recovery	Sample No.	SPT Values (blw/6 in)	Qu (tsf)	Moisture Content (%)
	6.7	7-inch thick, black SILTY CLAY LOAM --TOPSOIL--						
		Stiff to very stiff, black and brown SILTY CLAY LOAM, trace gravel --FILL--			1	PUSH	1.25 P	17
					2	PUSH	2.25 P	25
	3.5	Very stiff, brown and gray CLAY to SILTY CLAY, trace gravel	5		3	PUSH	2.50 P	18
					4	PUSH	2.00 P	22
	-0.8	Medium stiff, brown and gray SILTY CLAY LOAM, trace gravel			5	PUSH	0.50 P	18
			10		6	PUSH	0.75 P	17
	-4.5	Stiff, gray CLAY			7	PUSH	1.00 P	22
			15		8	PUSH	1.00 P	22
	-8.8	Boring terminated at 16.00 ft						
			20					
			25					

GENERAL NOTES

Begin Drilling: **01-15-2016** Complete Drilling: **01-15-2016**
Drilling Contractor: **Wang Engineering, Inc.** Drill Rig: **Geoprobe HA**
Driller: **F&J** Logger: **F. Bozga** Checked by: **C. Marin**
Drilling Method: **1" ID Pneumatic Geoprobe LB Sampler**

WATER LEVEL DATA

While Drilling: **DRY**
At Completion of Drilling: **DRY**
Time After Drilling: **NA**
Depth to Water: **NA**

The stratification lines represent the approximate boundary between soil types; the actual transition may be gradual.

WANGENGINC 314302.GPJ WANGENG.GDT 7/19/16

...\RW2-E5038-009-SB3.dgn
11/29/2017 1:50:36 PM

DESIGN:				
DRAWN: MTR				
CHECKED:				
APPROVED: DF				
DATE: 11/29/2017				
SCALE:				
FILE:	NO.	BY	DATE	DESCRIPTION
	REVISIONS			

KEY PLAN:

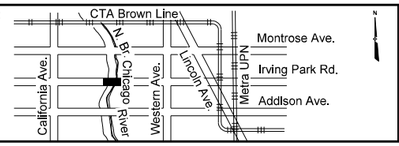

CDOT
CHICAGO DEPARTMENT OF TRANSPORTATION

BOWMAN, BARRETT & ASSOCIATES INC.
CONSULTING ENGINEERS
Chicago, Illinois
312.228.0100
www.bbandainc.com

W. IRVING PARK ROAD AT NORTH BRANCH CHICAGO RIVER

RETAINING WALL 2
SOIL BORINGS III

PROJECT NO. E-5-038
DRAWING NO. RW–14
CONTRACT NO. XXXXX

TOTAL SHEETS	SHEET NO.
184	178

Wang Engineering
wangeng@wangeng.com
1145 N Main Street
Lombard, IL 60148
Telephone: 630 953-9928
Fax: 630 953-9938

BORING LOG RW-01

WEI Job No.: 314-05-02

Client: **Bowman, Barrett and Associates, Inc.**
Project: **Irving Park Rd. Bridge and Bike Path**
Location: **Chicago IL**

Datum: CCD
Elevation: 12.94 ft
North: 4784.34 ft
East: 9441.71 ft
Station: 202+15.12
Offset: 22.09 LT

Depth (ft)	Elevation (ft)	SOIL AND ROCK DESCRIPTION	Sample Type / recovery	Sample No.	SPT Values (blw/6 in)	Qu (tsf)	Moisture Content (%)
	12.5	5-inch thick, black SILTY LOAM					
		--TOPSOIL--					
		Very stiff to hard, brown and gray SILTY CLAY, trace gravel and occasinal organic matter					
		--FILL--		1	8 7 6	1.25 P	20
5				2	2 1 3	2.50 P	25
				3	7 10 13	6.56 B	21
	3.9						
		Medium dense, brown SANDY LOAM; wet		4	2 4 8	4.02 B	22
10							
	2.4						
		Medium stiff to stiff, gray CLAY to SILTY CLAY, trace gravel		5	4 5 7	1.97 B	31
		--interbedded sand; moist--		6	5 4 5	0.82 B	27
15							
		--hard drilling, 14 to 18 feet--					
		--possible cobbles--		7	7 5 8	NR	
				8	5 5 6	0.75 P	22
20							
				9	3 4 6	1.39 B	23
				10	4 4 6	1.00 P	19
25							

Depth (ft)	Elevation (ft)	SOIL AND ROCK DESCRIPTION	Sample Type / recovery	Sample No.	SPT Values (blw/6 in)	Qu (tsf)	Moisture Content (%)
		--L_L(%)=34, P_L(%)=16--					
		--%Gravel=2.1--					
		--%Sand=7.6--					
		--%Silt=50.7--					
		--%Clay=39.6--					
	-15.1	--A-6(15)--					
		Very stiff to hard, gray SILTY CLAY LOAM to SILTY LOAM, trace gravel		11	3 4 4	1.31 B	26
30				12	5 9 17	4.02 B	16
				13	6 10 16	2.30 B	12
35							
	-23.8						
		Dense, gray SILTY LOAM; dry			11		
				14	11 33 49	NP	11
40	-26.8						
		Gray SANDY LOAM; moist					
	-28.8						
		Very dense, gray SILTY LOAM; moist		15	15 40 50/4	NP	18
45							
		--hard drilling, 45 to 53.5 feet--					
		--possible cobbles--					
		--L_L(%)=20, P_L(%)=14--					
		--%Gravel=5.0--					
		--%Sand=29.3--					
		--%Silt=54.5--		16	22 27 50/5	NP	15
50							

GENERAL NOTES

Begin Drilling: **12-22-2015** Complete Drilling: **12-22-2015**
Drilling Contractor: **Wang Testing Services** Drill Rig: **D-25 ATV**
Driller: **K&K** Logger: **A. Tomaras** Checked by: **C. Marin**
Drilling Method: **2.25" ID HSA to 10'; mud rotatary 10' thereafter; borehole grouted upon completion.**

WATER LEVEL DATA

While Drilling: **9.00 ft**
At Completion of Drilling: **9.00 ft**
Time After Drilling: **NA**
Depth to Water: **NA**

The stratification lines represent the approximate boundary between soil types; the actual transition may be gradual.

WANGENGINC 314302.GPJ WANGENG.GDT 7/19/16

Wang Engineering
wangeng@wangeng.com
1145 N Main Street
Lombard, IL 60148
Telephone: 630 953-9928
Fax: 630 953-9938

BORING LOG RW-01

WEI Job No.: 314-05-02

Client: Bowman, Barrett and Associates, Inc.
Project: Irving Park Rd. Bridge and Bike Path
Location: Chicago IL

Datum: CCD
Elevation: 12.94 ft
North: 4784.34 ft
East: 9441.71 ft
Station: 202+15.12
Offset: 22.09 LT

Depth (ft)	Elevation (ft)	SOIL AND ROCK DESCRIPTION	Sample Type / recovery	Sample No.	SPT Values (blw/6 in)	Qu (tsf)	Moisture Content (%)
		--%Clay=11.2--					
		--A-4(1)--					
		--hard drilling, 45 to 53.5 feet--					
		--possible cobbles--		17	50/5	NP	13
55							
	-45.6						
		--difficult drilling from 58.5 feet--		18	50/2	NP	13
		--WEATHERED BEDROCK--					
60	-47.1						
		Very poor, strong, gray, weathered DOLOSTONE, intensely fractured					
		RUN 1: 60.0 to 65.0 feet		19	CORE		
		Recovery=57%					
		RQD=13%					
65	-52.1						
		Boring terminated at 58.50 ft					
70							
75							

GENERAL NOTES

Begin Drilling: 12-22-2015 Complete Drilling: 12-22-2015
Drilling Contractor: Wang Testing Services Drill Rig: D-25 ATV
Driller: K&K Logger: A. Tomaras Checked by: C. Marin
Drilling Method: 2.25" ID HSA to 10'; mud rotatary 10' thereafter; borehole grouted upon completion.

WATER LEVEL DATA

While Drilling: 9.00 ft
At Completion of Drilling: 9.00 ft
Time After Drilling: NA
Depth to Water: NA

The stratification lines represent the approximate boundary between soil types; the actual transition may be gradual.

WANGENGINC 314302.GPJ WANGENG.GDT 7/19/16

...\RW2-E5038-010-SB4.dgn
11/29/2017 1:50:46 PM

DESIGN:				
DRAWN: MTR				
CHECKED:				
APPROVED: DF				
DATE: 11/29/2017				
SCALE:				
FILE:	NO.	BY	DATE	DESCRIPTION
	REVISIONS			

KEY PLAN:

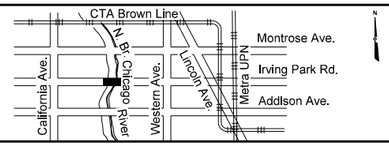

CDOT
CHICAGO DEPARTMENT OF TRANSPORTATION

BOWMAN, BARRETT & ASSOCIATES INC.
CONSULTING ENGINEERS
Chicago, Illinois
312.228.0100
www.bbandainc.com

W. IRVING PARK ROAD AT NORTH BRANCH CHICAGO RIVER

RETAINING WALL 2
SOIL BORINGS IV

PROJECT NO. E-5-038
DRAWING NO. RW–15
CONTRACT NO. XXXXX

TOTAL SHEETS	SHEET NO.
184	179

Wang Engineering

wangeng@wangeng.com
1145 N Main Street
Lombard, IL 60148
Telephone: 630 953-9928
Fax: 630 953-9938

BORING LOG RW-02

WEI Job No.: 314-05-02

Client: **Bowman, Barrett and Associates, Inc.**
Project: **Irving Park Rd. Bridge and Bike Path**
Location: **Chicago IL**

Datum: CCD
Elevation: 13.79 ft
North: 4860.82 ft
East: 9480.37 ft
Station: 203+15.68
Offset: 42.74 LT

Depth (ft)	Elevation (ft)	SOIL AND ROCK DESCRIPTION	Sample Type / recovery	Sample No.	SPT Values (blw/6 in)	Qu (tsf)	Moisture Content (%)
	12.9	Dark brown SILTY LOAM --TOPSOIL--					
		Very stiff, gray SILTY CLAY, trace gravel		1	3 5 4	2.25 P	22
	10.8	--FILL--					
	9.8	Loose, dark brown SILTY LOAM; moist					
5		--BURIED TOPSOIL--		2	3 3 5	2.75 P	22
		Very stiff to hard, brown and gray SILTY CLAY to SILTY CLAY LOAM, trace gravel		3	4 4 5	4.25 P	18
10				4	6 8 10	6.56 B	20
				5	3 7 9	4.10 B	20
	0.8	Stiff to very stiff, gray CLAY to SILTY CLAY, trace gravel --no gravel--		6	3 4 5	1.39 B	36
15		--interbedded fine sand seams--		7	2 4 4	1.25 P	20
		--L_L(%)=34, P_L(%)=15-- --%Gravel=5.2-- --%Sand=14.4-- --%Silt=48.8-- --%Clay=31.7-- --A-6 (14)--		8	3 4 6	1.64 B	21
20				9	3 4 6	1.80 B	22
25				10	3 4 7	2.05 B	23
	-18.0	Hard, gray SILTY CLAY, trace gravel					
30				11	3 4 7	2.30 B	22
				12	3 5 5	1.31 B	22
35				13	5 9 12	4.51 B	16
	-23.0	Medium dense ro very dense, gray SILT to SILTY LOAM, trace gravel; dry					
40				14	5 8 21	NP	14
		--hard drilling, 42 to 46 feet-- --possible cobbles--		15	40 50/3	NP	11
45							
50				16	50/5	NP	12

GENERAL NOTES

Begin Drilling: **12-18-2015** Complete Drilling: **12-21-2015**
Drilling Contractor: **Wang Testing Services** Drill Rig: **D-25 ATV**
Driller: **R&K&K** Logger: **D. Kolpacki** Checked by: **C. Marin**
Drilling Method: **2.25" ID HSA to 10'; mud rotatary 10' thereafter; borehole grouted upon completion.**

WATER LEVEL DATA

While Drilling: **Rotary wash**
At Completion of Drilling: **NA**
Time After Drilling: **NA**
Depth to Water: **NA**

The stratification lines represent the approximate boundary between soil types; the actual transition may be gradual.

WANGENGINC 3140502.GPJ WANGENG.GDT 7/19/16

Wang Engineering

wangeng@wangeng.com
1145 N Main Street
Lombard, IL 60148
Telephone: 630 953-9928
Fax: 630 953-9938

BORING LOG RW-02

WEI Job No.: 314-05-02

Client: **Bowman, Barrett and Associates, Inc.**
Project: **Irving Park Rd. Bridge and Bike Path**
Location: **Chicago IL**

Datum: CCD
Elevation: 13.79 ft
North: 4860.82 ft
East: 9480.37 ft
Station: 203+15.68
Offset: 42.74 LT

Depth (ft)	Elevation (ft)	SOIL AND ROCK DESCRIPTION	Sample Type / recovery	Sample No.	SPT Values (blw/6 in)	Qu (tsf)	Moisture Content (%)
		--%Gravel=2.5-- --%Sand=4.9-- --%Silt=87.6-- --%Clay=5.0-- --A-4 (0)--		17	23 29 28	NP	21
	-44.8	--AUGER REFUSAL-- Boring terminated at 58.60 ft		18	50/1	NR	
60							
65							
70							
75							

GENERAL NOTES

Begin Drilling: **12-18-2015** Complete Drilling: **12-21-2015**
Drilling Contractor: **Wang Testing Services** Drill Rig: **D-25 ATV**
Driller: **R&K&K** Logger: **D. Kolpacki** Checked by: **C. Marin**
Drilling Method: **2.25" ID HSA to 10'; mud rotatary 10' thereafter; borehole grouted upon completion.**

WATER LEVEL DATA

While Drilling: **Rotary wash**
At Completion of Drilling: **NA**
Time After Drilling: **NA**
Depth to Water: **NA**

The stratification lines represent the approximate boundary between soil types; the actual transition may be gradual.

WANGENGINC 3140502.GPJ WANGENG.GDT 7/19/16

...\RW2-E5038-011-SB5.dgn
11/29/2017 1:50:56 PM

DESIGN:				
DRAWN: MTR				
CHECKED:				
APPROVED: DF				
DATE: 11/29/2017				
SCALE:				
FILE:	NO.	BY	DATE	DESCRIPTION
	REVISIONS			

KEY PLAN:

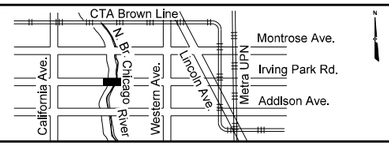

CDOT
CHICAGO DEPARTMENT OF TRANSPORTATION

BOWMAN, BARRETT & ASSOCIATES INC.
CONSULTING ENGINEERS
Chicago, Illinois
312.228.0100
www.bbandainc.com

W. IRVING PARK ROAD AT NORTH BRANCH CHICAGO RIVER

RETAINING WALL 2
SOIL BORINGS V

PROJECT NO. E-5-038
DRAWING NO. RW–16
CONTRACT NO. XXXXX

TOTAL SHEETS	SHEET NO.
184	180

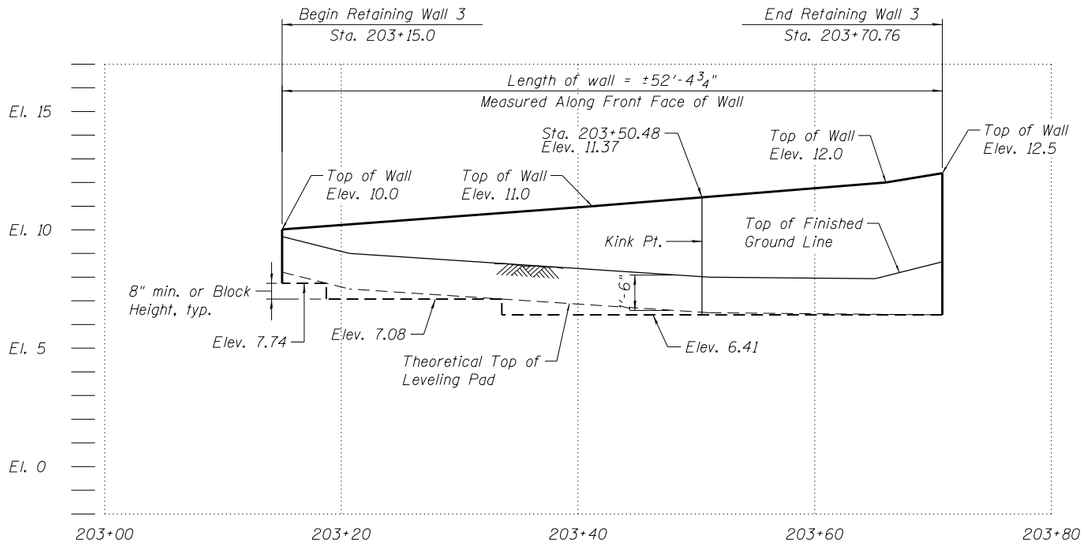

ELEVATION
(Looking West)

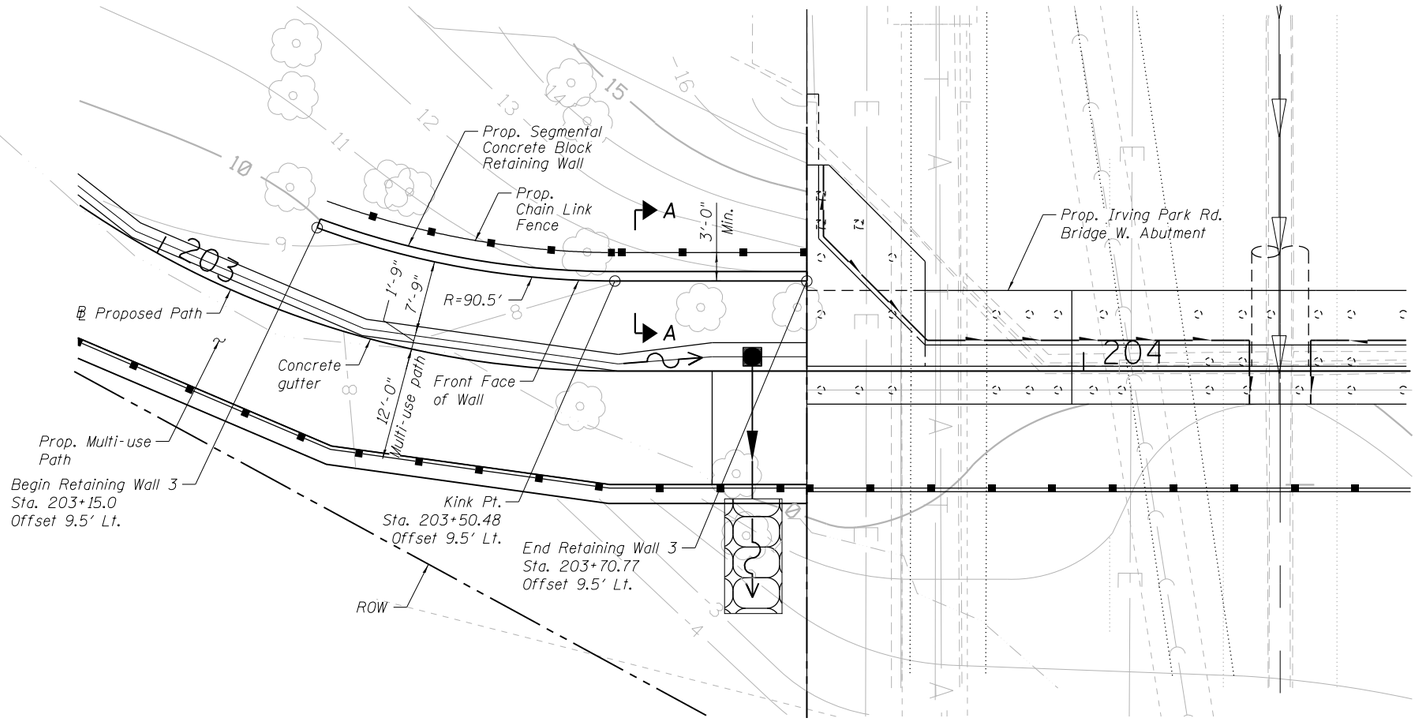

PLAN

BILL OF MATERIAL

ITEM	UNIT	QUANTITY
Segmental Concrete Block Wall	Sq. Ft.	250

DESIGN SPECIFICATIONS

2014 AASHTO LRFD Bridge Design Specifications.
7th Edition, with 2016 Interim Revisions

SEISMIC DATA

Seismic Performance Zone (SPZ) = 1
Design Spectral Acceleration at 1.0 sec (S_{D1}) = 0.060g
Design Spectral Acceleration at 0.2 sec (S_{DS}) = 0.106g
Soil Site Class = C

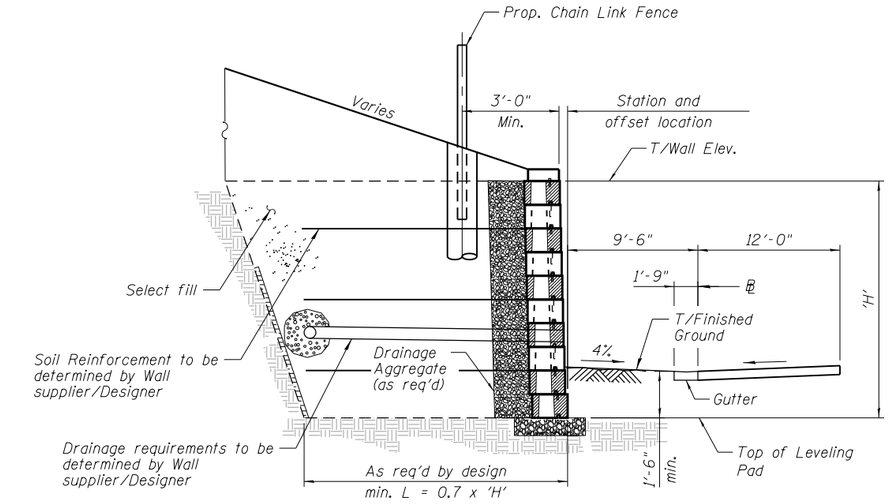

SECTION A-A

NOTES

1. Stations and offsets of the wall are relative to ℄ of Prop. Path at the front face of wall at the base course. Wall Designer shall adjust for setback as require
2. A rodent shield and headwall shall be provided for all pipe underdrains outleting to daylight, if pipe underdrain is required per manufacturer requirements. Cost of rodent shield, headwall and pipe underdrain shall be included with Segmental Concrete Block Wall.
3. The maximum applied service bearing pressure Q_{max} shall be 1,200 p.s.f. Contractor shall verify soil properties and notify the Engineer if adequate bearing values are not encountered at the bottom of footing elevations.
4. Modifications to the block walls and additional material required for installation of railing shall be included in the cost of Segmental Concrete Block Wall.
5. Concrete and reinforcement bars for fence foundation shall be included in the cost of Chain Link Fence (Special). See drawings A-01 thru A-04.

...\RW3-E5038-001-GPE.dgn
11/29/2017 1:51:07 PM

DESIGN: CA				
DRAWN: MTR				
CHECKED:				
APPROVED: DF				
DATE: 11/29/2017				
SCALE:				
FILE:	NO.	BY	DATE	DESCRIPTION
	REVISIONS			

KEY PLAN:

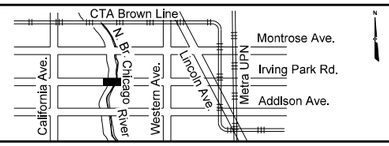

CDOT
CHICAGO DEPARTMENT
OF TRANSPORTATION

BOWMAN, BARRETT
& ASSOCIATES INC.
CONSULTING ENGINEERS
Chicago, Illinois
312.228.0100
www.bbandainc.com

W. IRVING PARK ROAD
AT NORTH BRANCH
CHICAGO RIVER

RETAINING WALL 3
GENERAL PLAN AND ELEVATION

PROJECT NO.
E-5-038
DRAWING NO.
RW-17
CONTRACT NO. XXXXX

TOTAL SHEETS	SHEET NO.
184	181

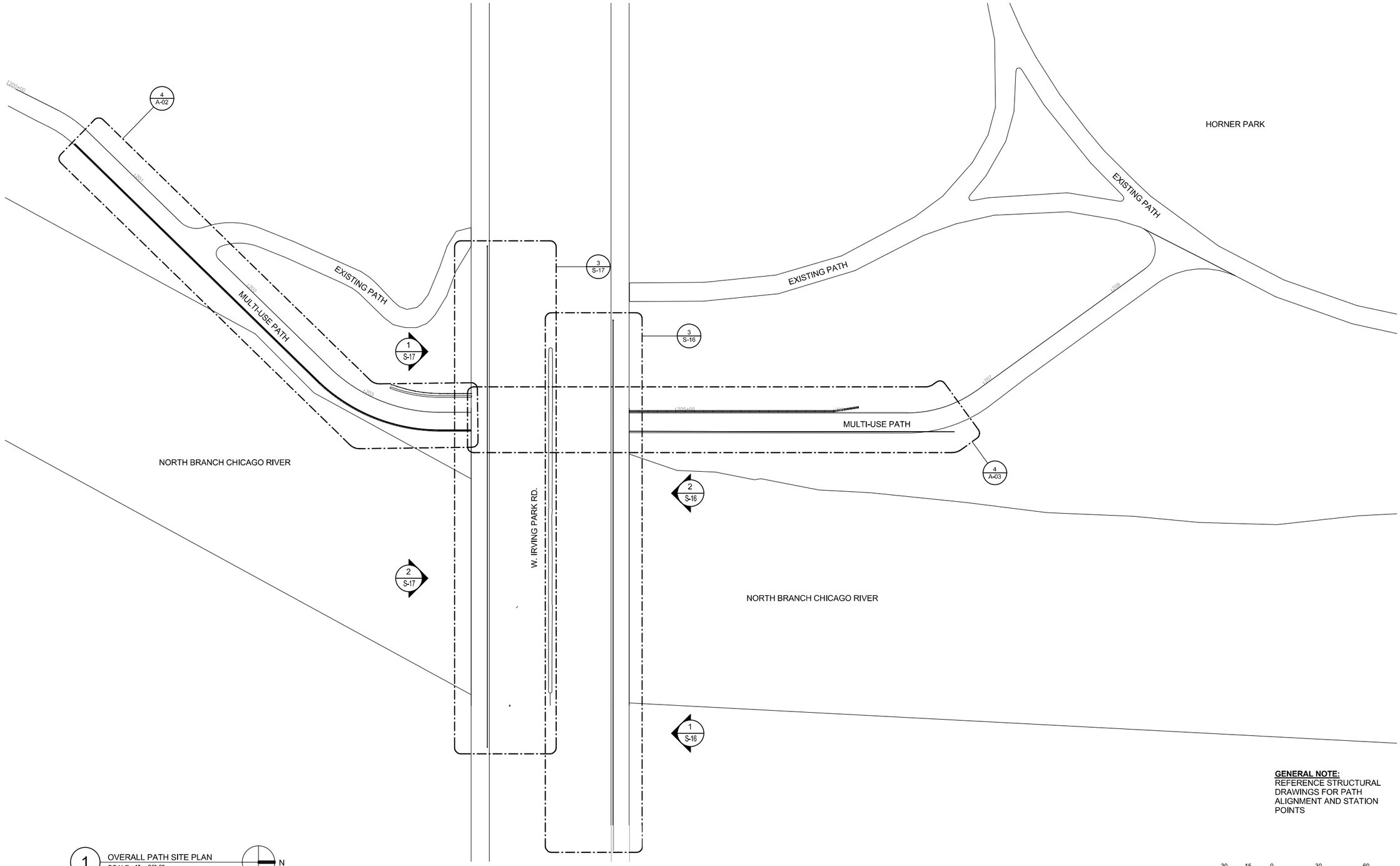

1 OVERALL PATH SITE PLAN
SCALE: 1" = 30'-0"

N

GENERAL NOTE:
REFERENCE STRUCTURAL DRAWINGS FOR PATH ALIGNMENT AND STATION POINTS

30 15 0 30 60
SCALE: 1"=30'-0"

$FILE$
$TIME$
$DATE$

DESIGN: DAS				
DRAWN: AND				
CHECKED: DAS				
APPROVED:				
DATE: 10-9-17				
SCALE:				
FILE:	NO.	BY	DATE	DESCRIPTION
	REVISIONS			

KEY PLAN:

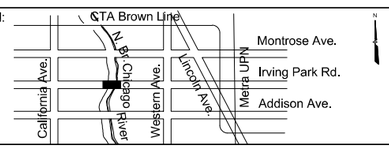

CDOT
CHICAGO DEPARTMENT OF TRANSPORTATION

MULLER+MULLER
ARCHITECTURE · PLANNING · INTERIORS
700 N SANGAMON
CHICAGO, IL 60642
T: 312.432.4180
F: 312.432.4184
© 2013, Muller & Muller, Ltd.

OUC NUMBER 2014-63418

W. IRVING PARK ROAD AT NORTH BRANCH CHICAGO RIVER

ARCHITECTURAL SITE PLAN

STA. 200+60.00 TO STA. 206+70.69

PROJECT NO. E-5-038
DRAWING NO. A-01
CONTRACT NO. XXXXX

TOTAL SHEETS	SHEET NO.
184	182

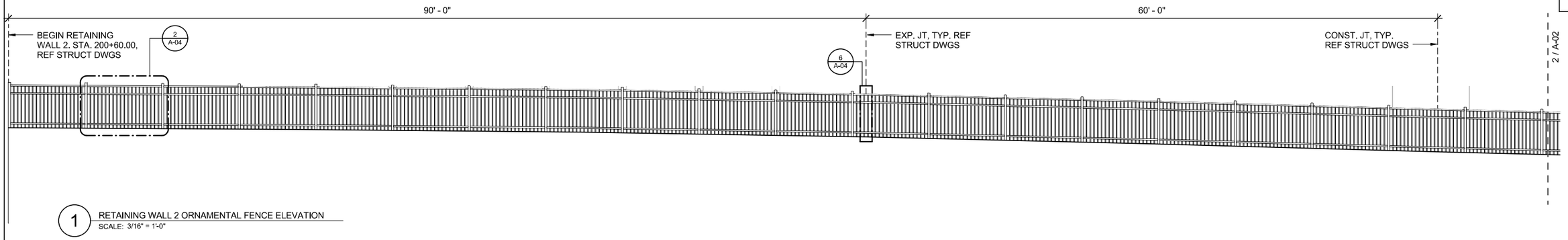

1 RETAINING WALL 2 ORNAMENTAL FENCE ELEVATION
SCALE: 3/16" = 1'-0"

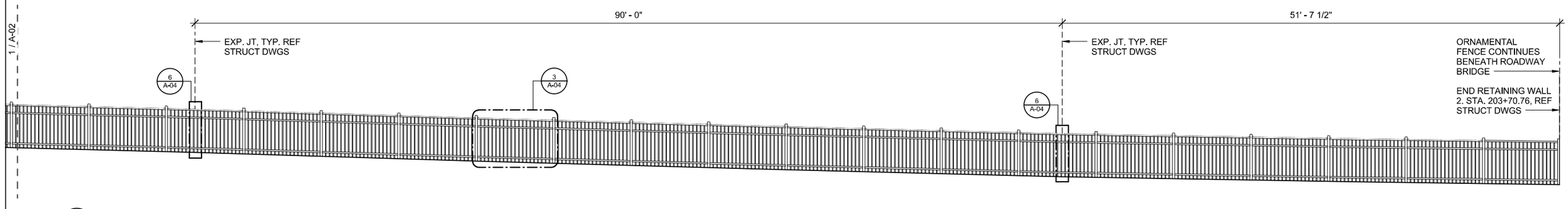

2 RETAINING WALL 2 ORNAMENTAL FENCE ELEVATION
SCALE: 3/16" = 1'-0"

3 FENCE AT SEGMENTAL BLOCK WALL
SCALE: 3/16" = 1'-0"

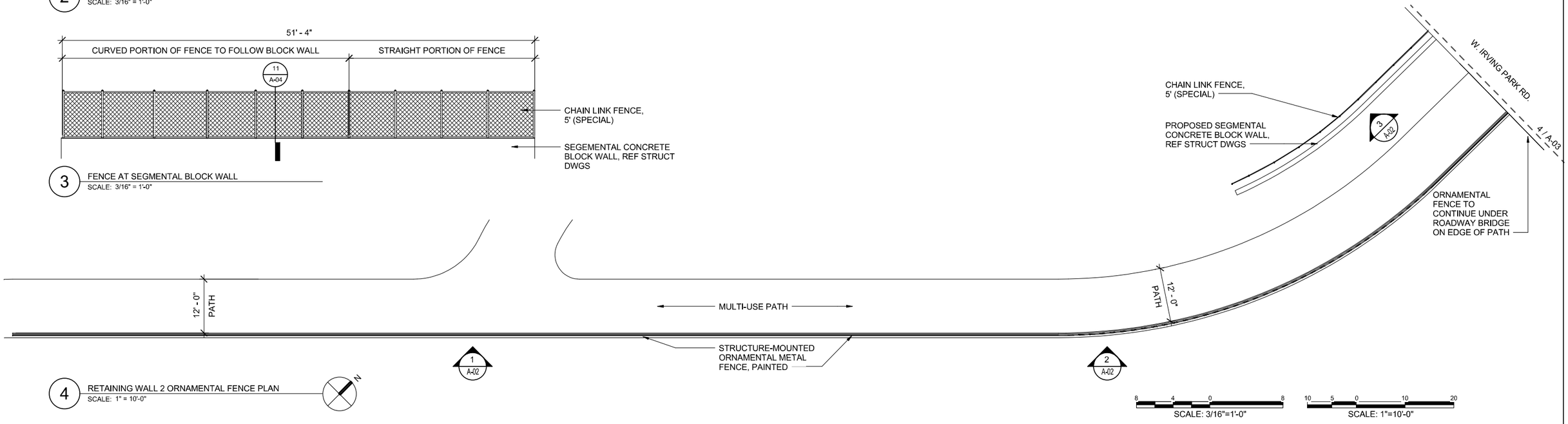

4 RETAINING WALL 2 ORNAMENTAL FENCE PLAN
SCALE: 1" = 10'-0"

8 4 0 8
SCALE: 3/16"=1'-0"

10 5 0 10 20
SCALE: 1"=10'-0"

$FILE$

$TIME$

DESIGN: DAS				
DRAWN: AND				
CHECKED: DAS				
APPROVED:				
DATE: 10-9-17				
SCALE:				
FILE:	NO.	BY	DATE	DESCRIPTION
	REVISIONS			

$DATE$

KEY PLAN:

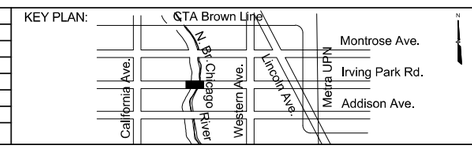

CDOT
CHICAGO DEPARTMENT OF TRANSPORTATION

MULLER+MULLER
ARCHITECTURE · PLANNING · INTERIORS
700 N SANGAMON CHICAGO, IL 60642
T: 312.432.4180 F: 312.432.4184
© 2013, Muller & Muller, Ltd.

OUC NUMBER 2014-63418

W. IRVING PARK ROAD AT NORTH BRANCH CHICAGO RIVER

ORNAMENTAL FENCE ARCHITECTURAL PLAN AND ELEVATIONS

STA. 200+60.00 TO STA. 203+70.76

PROJECT NO. E-5-038

DRAWING NO. A-02

CONTRACT NO. XXXXX

TOTAL SHEETS	SHEET NO.
184	183

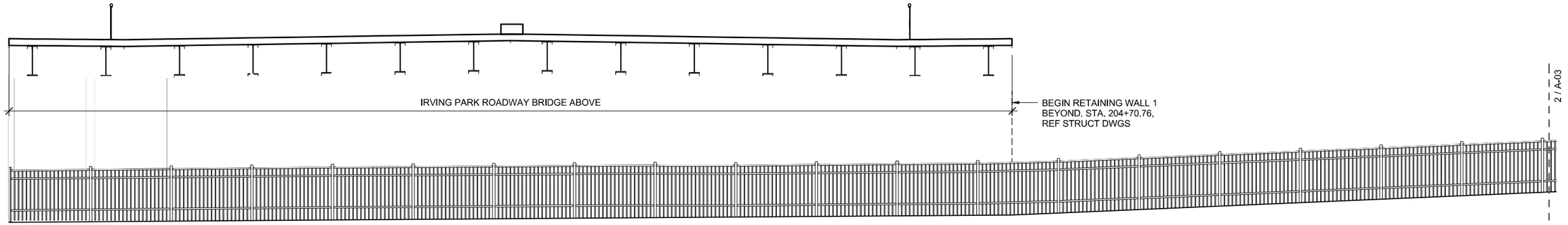

1 NORTH ORNAMENTAL FENCE ELEVATION
SCALE: 3/16" = 1'-0"

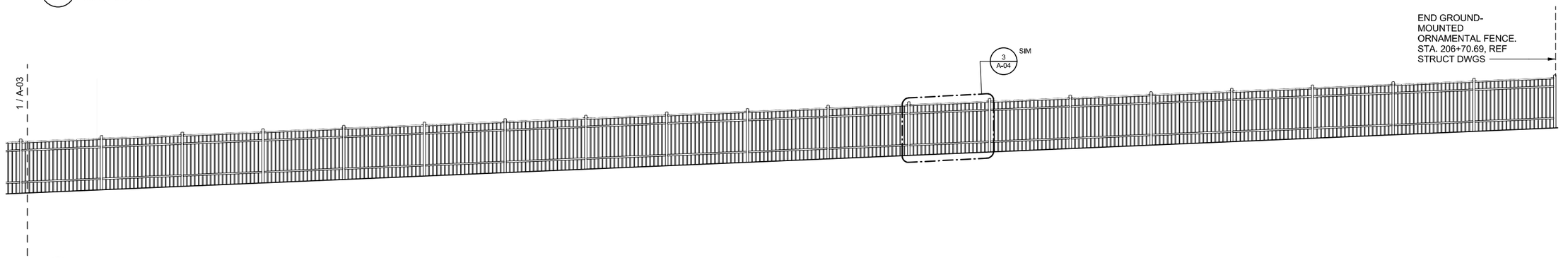

2 NORTH ORNAMENTAL FENCE ELEVATION
SCALE: 3/16" = 1'-0"

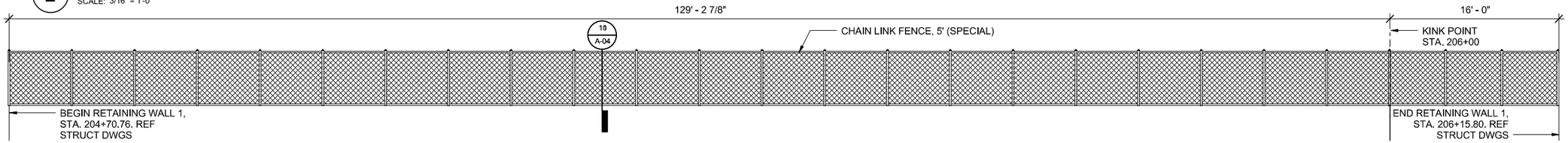

3 RETAINING WALL 1 FENCE ELEVATION
SCALE: 3/16" = 1'-0"

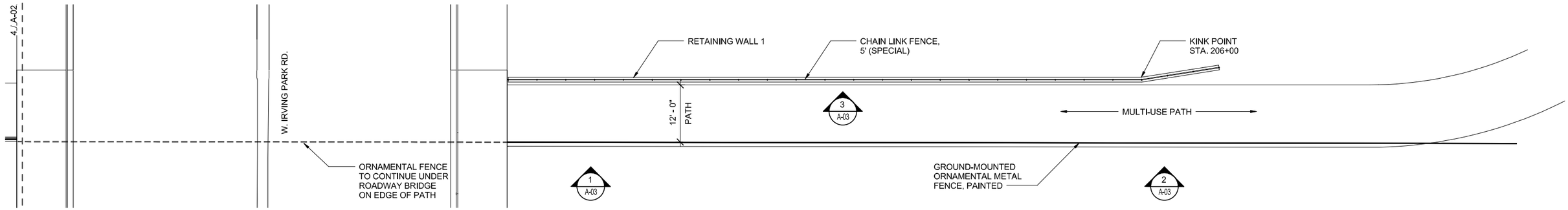

4 NORTH ORNAMENTAL FENCE PLAN
SCALE: 1" = 10'-0"

N

8 4 0 8
SCALE: 3/16"=1'-0"

10 5 0 10 20
SCALE: 1"=10'-0"

$FILE$

$TIME$

DESIGN: DAS				
DRAWN: AND				
CHECKED: DAS				
APPROVED:				
DATE: 10-9-17				
SCALE:				
FILE:	NO.	BY	DATE	DESCRIPTION
	REVISIONS			

$DATE$

KEY PLAN:

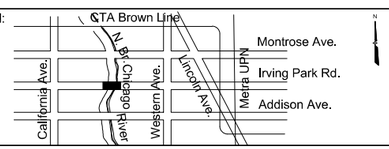

CDOT
CHICAGO DEPARTMENT OF TRANSPORTATION

MULLER+MULLER
ARCHITECTURE · PLANNING · INTERIORS
700 N SANGAMON
CHICAGO, IL 60642
T: 312.432.4180
F: 312.432.4184
© 2013, Muller & Muller, Ltd.

OUC NUMBER 2014-63418

W. IRVING PARK ROAD AT NORTH BRANCH CHICAGO RIVER

ORNAMENTAL FENCE ARCHITECTURAL PLAN AND ELEVATIONS

STA. 204+70.76 TO STA. 206+70.69

PROJECT NO. E-5-038

DRAWING NO. A-03

CONTRACT NO. XXXXX

TOTAL SHEETS	SHEET NO.
184	184

BILL OF MATERIAL

ITEM	UNIT	QUANTITY
ORNAMENTAL FENCE	FOOT	630
CHAIN LINK FENCE, 5' (SPECIAL)	FOOT	197

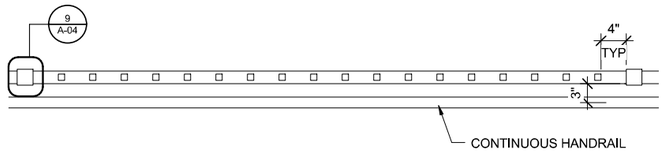

1 TYPICAL ORNAMENTAL FENCE ENLARGED PLAN
SCALE: 1" = 1'-0"

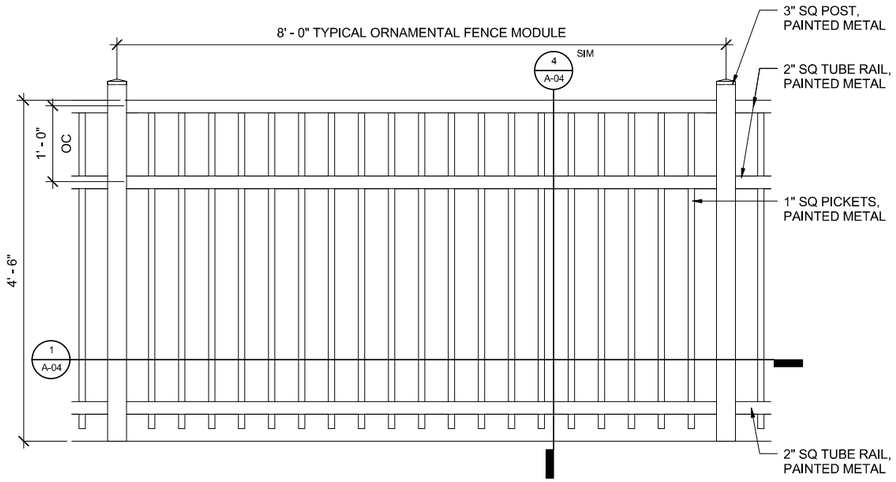

2 TYPICAL FLAT ORNAMENTAL FENCE PANEL
SCALE: 1" = 1'-0"

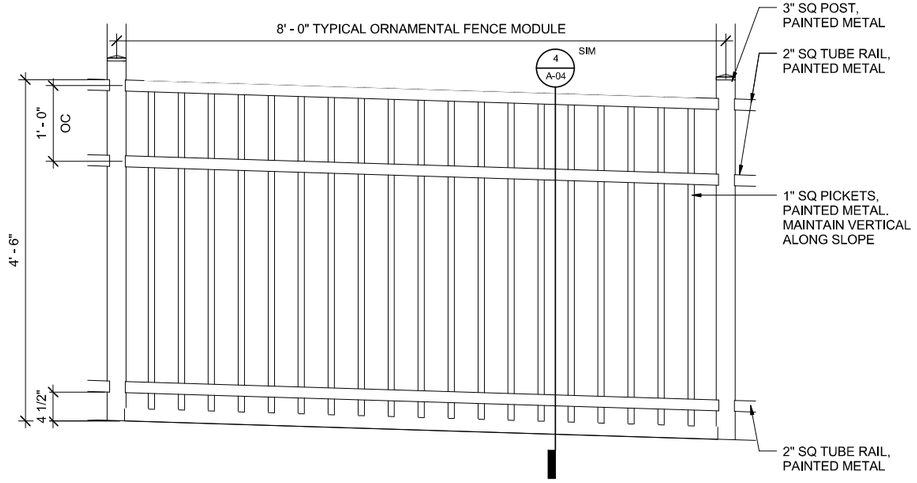

3 TYPICAL SLOPED ORNAMENTAL FENCE PANEL
SCALE: 1" = 1'-0"

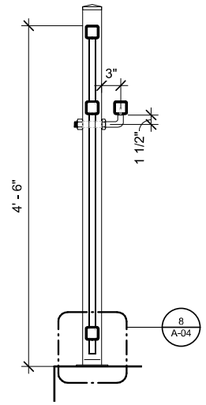

4 TYPICAL ORNAMENTAL FENCE SECTION
SCALE: 1" = 1'-0"

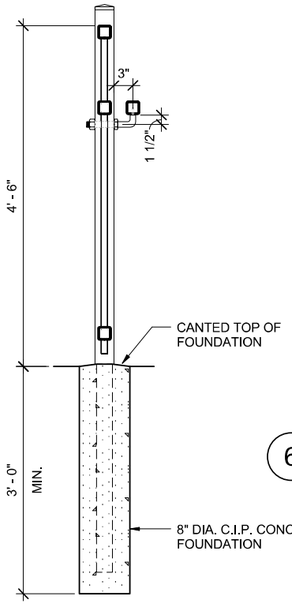

5 ORNAMENTAL FENCE SECTION AT EMBEDDED POST
SCALE: 1" = 1'-0"

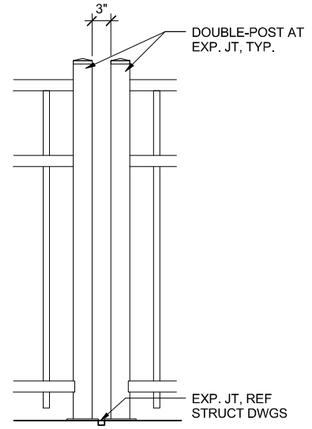

6 ORNAMENTAL FENCE ELEVATION AT EXP. JT.
SCALE: 1" = 1'-0"

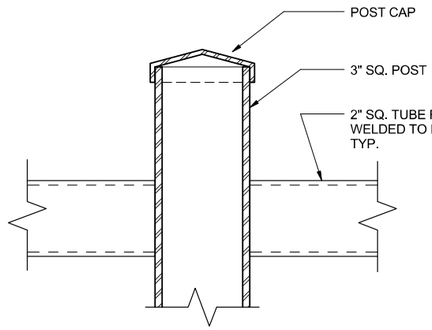

7 SECTION DETAIL - POST BRACKET & CAP
SCALE: 6" = 1'-0"

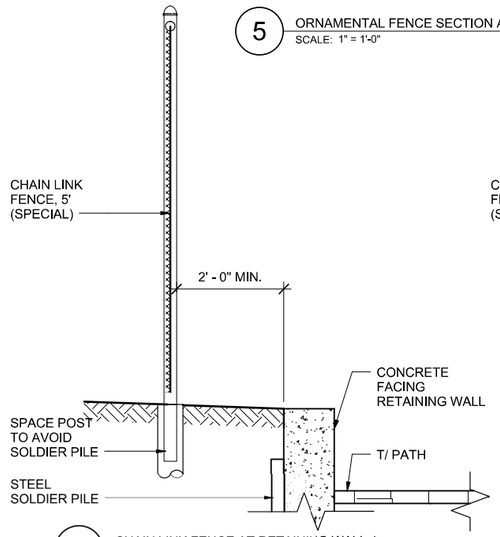

10 CHAIN LINK FENCE AT RETAINING WALL 1
NTS

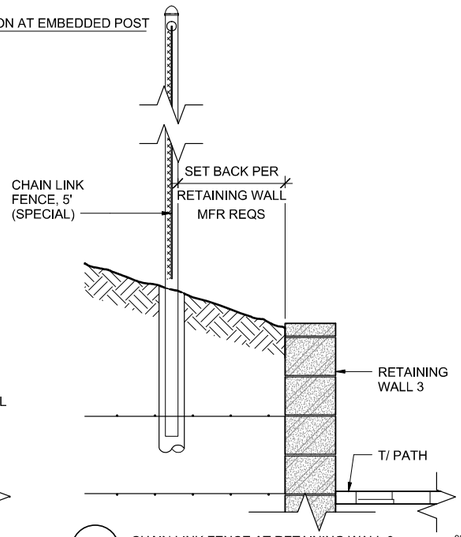

11 CHAIN LINK FENCE AT RETAINING WALL 3
NTS

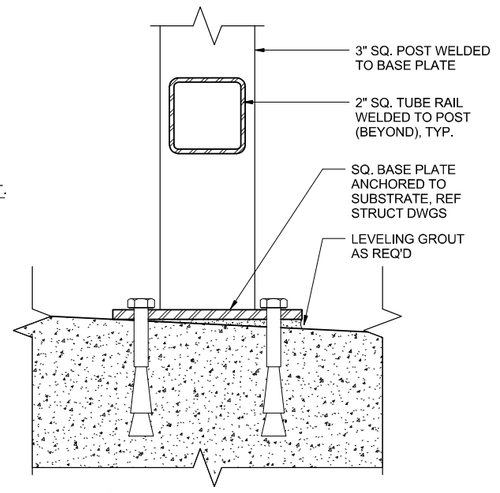

8 SECTION DETAIL - POST BASE PLATE
SCALE: 6" = 1'-0"

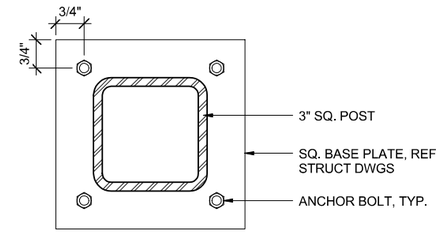

9 PLAN DETAIL - POST BASE PLATE
SCALE: 6" = 1'-0"

3" 2 1 0 3"
SCALE: 6"=1'-0"

1 1/2 0 1 2
SCALE: 1"=1'-0"

$FILE$

$TIME$

$DATE$

DESIGN: DAS				
DRAWN: AND				
CHECKED: DAS				
APPROVED:				
DATE: 10-9-17				
SCALE:				
FILE:	NO.	BY	DATE	DESCRIPTION
	REVISIONS			

KEY PLAN:

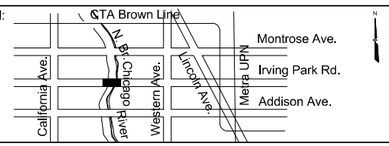

CDOT
CHICAGO DEPARTMENT OF TRANSPORTATION

MULLER+MULLER
ARCHITECTURE · PLANNING · INTERIORS
700 N SANGAMON
CHICAGO, IL 60642
T: 312.432.4180
F: 312.432.4184
© 2013, Muller & Muller, Ltd.

OUC NUMBER 2014-63418

W. IRVING PARK ROAD AT NORTH BRANCH CHICAGO RIVER

ARCHITECTURAL DETAILS

PROJECT NO. E-5-038

DRAWING NO. A-04

CONTRACT NO. XXXXX

STRUCTURE_NAME	DOCIDNO	YEAR	DESCR	SHEETTYPE
Irving Park Rd. Bridge	1660820002	1951	Bridge Sketch - Widened and Redeck	
Irving Park Rd. Bridge	1660820003	1912	Elevation and Section	
Irving Park Rd. Bridge	1660820004	1912	Sketch ""A"" Plat of Vicinity	
Irving Park Rd. Bridge	1660820005	1914	Gas Pipe Railing	
Irving Park Rd. Bridge	1660820006	1914	Cast Steel Base for Setting Trolley on Steel Girders	
Irving Park Rd. Bridge	1660820008	1912	Sketch ""C"" Plat of Vicinity	
Irving Park Rd. Bridge	1660820009	1997	Extension of Wing Walls - Old Bridge	
Irving Park Rd. Bridge	1660820010	1997	Plate Girders - Old Bridge	
Irving Park Rd. Bridge	1660820011	1997	Plate Girders - Old Bridge	
Irving Park Rd. Bridge	1660820012	1997	Revised Piers	
Irving Park Rd. Bridge	1660820013	1912	General Plan	
Irving Park Rd. Bridge	1660820014	1912	Location and Plan of Temp. and Permanent Bridge	
Irving Park Rd. Bridge	1660820015	1912	Piling Plan	
Irving Park Rd. Bridge	1660820016	1912	Abutments	
Irving Park Rd. Bridge	1660820017	1912	Abutments Details	
Irving Park Rd. Bridge	1660820018	1912	Reinforceing Bars	
Irving Park Rd. Bridge	1660820019	1912	Reinforceing Bars	
Irving Park Rd. Bridge	1660820020	1912	River Piers	
Irving Park Rd. Bridge	1660820021	1912	End - Span Girders	
Irving Park Rd. Bridge	1660820022	1912	Center - Span Girders	
Irving Park Rd. Bridge	1660820023	1912	Center - Span Floor System	
Irving Park Rd. Bridge	1660820024	1912	End - Span Floor System	
Irving Park Rd. Bridge	1660820025	1912	Hand Railing	
Irving Park Rd. Bridge	1660820026	1912	Railing	
Irving Park Rd. Bridge	1660820027	1912	Moments and Shears	
Irving Park Rd. Bridge	1660820028	1912	Railing Details	
Irving Park Rd. Bridge	1660820029	1914	Railing Details	
Irving Park Rd. Bridge	1660820030	1914	Erection Diagram (Shop)	
Irving Park Rd. Bridge	1660820031	1913	Girders 1 (Shop)	
Irving Park Rd. Bridge	1660820032	1913	Girders 2 (Shop)	
Irving Park Rd. Bridge	1660820033	1913	Girders 3 (Shop)	
Irving Park Rd. Bridge	1660820034	1913	Laterals and Brackets (Shop)	
Irving Park Rd. Bridge	1660820035	1913	Stringers (Shop)	
Irving Park Rd. Bridge	1660820036	1913	Motor Fuel Tax Sketch	
Irving Park Rd. Bridge	1660820037	1944	Proposed Widening of Bridge	
Irving Park Rd. Bridge	1660820038	1944	General Plan and Sections	
Irving Park Rd. Bridge	1660820039	1944	Alterations and Add - Main Pier	
Irving Park Rd. Bridge	1660820040	1944	Alterations and Add - Abut pt. 1	
Irving Park Rd. Bridge	1660820041	1944	Alterations and Add - Abut pt. 2	
Irving Park Rd. Bridge	1660820042	1944	Alterations and Add - Approaches	
Irving Park Rd. Bridge	1660820043	1944	Stringers	
Irving Park Rd. Bridge	1660820044	1944	Stringers	
Irving Park Rd. Bridge	1660820045	1944	Girders and Floor Beams	
Irving Park Rd. Bridge	1660820046	1944	Expansion and Construction Joints	

Irving Park Rd. Bridge	1660820047	1944	Concrete Slabs and Reinforcement	
Irving Park Rd. Bridge	1660820048	1944	Sidewalk, Handrail, Girder Shoes	
Irving Park Rd. Bridge	1660820049	1947	Main Piers - Part 2	
Irving Park Rd. Bridge	1660820050	1949	Proposed Widening - Permit Drwg	
Irving Park Rd. Bridge	1660820051	1949	Alterations and Additions to Main Piers	
Irving Park Rd. Bridge	1660820052	1949	Alterations and Additions to Abutments - Stage 1	
Irving Park Rd. Bridge	1660820053	1949	General Plan and Sections	
Irving Park Rd. Bridge	1660820054	1949	Alter. and Add. to Abuts. - Stage 2	
Irving Park Rd. Bridge	1660820055	1949	Alterations to Approaches	
Irving Park Rd. Bridge	1660820056	1949	Stringers	
Irving Park Rd. Bridge	1660820057	1949	Girders and Floor Beams	
Irving Park Rd. Bridge	1660820058	1949	Expansion and Construction Joints	
Irving Park Rd. Bridge	1660820059	1949	Concrete Slabs and Reinforcement	
Irving Park Rd. Bridge	1660820060	1949	Handrail and Girder Shoes	
Irving Park Rd. Bridge	1660820061	1949	Plan of Existing Structure Showing Present Steel to Be Removed	
Irving Park Rd. Bridge	1660820062	1950	Erection Plan	
Irving Park Rd. Bridge	1660820063	1950	Erection Plan	
Irving Park Rd. Bridge	1660820064	1950	Erection Plan of Existing Device Joint	
Irving Park Rd. Bridge	1660820065	1950	Erection Plan of Construction	
Irving Park Rd. Bridge	1660820066	1950	Abutment and Pier Shoes Cover Plates Fills and Stiffner Angles	
Irving Park Rd. Bridge	1660820067	1950	Girders G1 and G2	
Irving Park Rd. Bridge	1660820068	1950	Girders G3	
Irving Park Rd. Bridge	1660820069	1950	Girders G4 and G5	
Irving Park Rd. Bridge	1660820070	1950	Girders G6 and G7	
Irving Park Rd. Bridge	1660820071	1950	Girders G6 and G7	
Irving Park Rd. Bridge	1660820072	1950	Girders G8, 9, 10, 11, and 12	
Irving Park Rd. Bridge	1660820073	1950	Girders G13, and G14, Sailage Plates Angles and Brackets	
Irving Park Rd. Bridge	1660820074	1950	Stringers	
Irving Park Rd. Bridge	1660820075	1950	Stringers	
Irving Park Rd. Bridge	1660820076	1950	Stringers and Floor Beams, Sidewalks Brackets and Hangers	
Irving Park Rd. Bridge	1660820077	1950	Floor Beams FB2, 3, 4, 5, and 6 Diaphram D1, Stiffner Ang.	
Irving Park Rd. Bridge	1660820078	1950	Laterals Construction and Exp. Joints/ Reinforcing Plates	
Irving Park Rd. Bridge	1660820079	1950	Expansion Device J and Shims	
Irving Park Rd. Bridge	1660820080	1950	Expansion Device and Plates, Shims	
Irving Park Rd. Bridge	1660820081	1950	Construction Joint Headers and Angles Shims	
Irving Park Rd. Bridge	1660820082	1950	Exp. Device, Shims, Wedges, Turn Bolts	
Irving Park Rd. Bridge	1660820083	1913	Pipe railing E. and W. Approaches	
Irving Park Rd. Bridge	1660820084	1950	Bridge Railing	
Irving Park Rd. Bridge	1660820085	1950	Bridge Railing	
Irving Park Rd. Bridge	1660820086	1950	Bridge Railing and Plates for Light Poles	
Irving Park Rd. Bridge	1660820087	1947	Widening	
Irving Park Rd. Bridge	1660820088	1940	Widening	
Irving Park Rd. Bridge	1660820089	1950	Restoration of Sewer Connection S - E Side	
Irving Park Rd. Bridge	1660820090	1947	Main W, Pier	
Irving Park Rd. Bridge	1660820091	1947	Main E. Pier	

Irving Park Rd. Bridge	1660820092	1949	Plan for Improving W. Irving Park Rd.	
Irving Park Rd. Bridge	1660820093	1949	Plan for Improving W. Irving Park Rd.	
Irving Park Rd. Bridge	1660820094	1949	Plan for Improving W. Irving Park Rd.	
Irving Park Rd. Bridge	1660820095	1949	Plan for Improving W. Irving Park Rd.	
Irving Park Rd. Bridge	1660820096	1916	Tunnel 1 Under Chicago River	
Irving Park Rd. Bridge	1660820097	1931	Details of Name Plate	
Irving Park Rd. Bridge	1660820098	1950	Bridge Slab	
Irving Park Rd. Bridge	1660820099	1943	General Plan and Cross Sections	
Irving Park Rd. Bridge	1660820100	1976	Title Sheet	
Irving Park Rd. Bridge	1660820101	1976	General Plan and Elevation	
Irving Park Rd. Bridge	1660820102	1976	Repairs Joint and Deck Patching	
Irving Park Rd. Bridge	1660820103	1976	Girder Bearing Repairs	
Irving Park Rd. Bridge	1660820104	1976	Expansion and Construction Joints	
Irving Park Rd. Bridge	1660820105	1976	Traffic Control Devices	
Irving Park Rd. Bridge	1660820106	1976	Barricades and Traffic Control Device	
Irving Park Rd. Bridge	1660820107	1976	Sidewalk, Parapet and Railing	
Irving Park Rd. Bridge	1660820108	1983	W. and E. Abutment Plan as Built	
Irving Park Rd. Bridge	1660820109	1983	Plates as Built	
Irving Park Rd. Bridge	1660820110	1983	Brackets as Built	
Irving Park Rd. Bridge	1660820111	1983	Elevation and Details as Built	
Irving Park Rd. Bridge	1660820112	1983	Expansion and Construction Joints	
Irving Park Rd. Bridge	1660820113	1996	Replacement of Expansion Joint	DESIGN
Irving Park Rd. Bridge	1660820114	1996	Replacement of Expansion Joint	DESIGN
Irving Park Rd. Bridge	1660820115	2002	COVER SHEET	DESIGN
Irving Park Rd. Bridge	1660820116	2002	GENERAL PLAN & CROSS SECTION	DESIGN
Irving Park Rd. Bridge	1660820117	2002	SPAN JOINTS SECTIONS & DETAILS	DESIGN
Irving Park Rd. Bridge	1660820118	2002	ABUTMENTS JOINTS SECTIONS & DETAILS	DESIGN
Irving Park Rd. Bridge	1660820119	2002	EXISTING FRAMING PLAN	DESIGN
Irving Park Rd. Bridge	1660820120	2002	FLOORBEAM & DIAPHRAGM REPLACEMENT	DESIGN
Irving Park Rd. Bridge	1660820121	2002	REINFORCEMENT PLAN SPAN	DESIGN
Irving Park Rd. Bridge	1660820122	2002	REINFORCEMENT PLAN ABUTMENTS	DESIGN
Irving Park Rd. Bridge	1660820123	2002	EXPANSION PLATES SPAN	DESIGN
Irving Park Rd. Bridge	1660820124	2002	EXPANSION PLATES ABUTMENTS	DESIGN
Irving Park Rd. Bridge	1660820125	2002	EXPANSION PLATES ABUTMENTS	DESIGN
Irving Park Rd. Bridge	1660820126	2002	TRAFFIC PHASING	DESIGN
Irving Park Rd. Bridge	1660820127	2002	FLOORBEAM & DIAPHRAGM REPLACEMENT	SHOP
Irving Park Rd. Bridge	1660820128	2002	FLOORBEAM & DIAPHRAGM DETAILS	SHOP
Irving Park Rd. Bridge	1660820129	2002	TEMPORARY SUPPORT BEAM DETAILS	SHOP
Irving Park Rd. Bridge	1660820130	2002	EXPANSION JOINT ASSEMBLIES LAYOUT PLAN	SHOP
Irving Park Rd. Bridge	1660820131	2002	EXPANSION JOINT ASSEMBLY DETAILS	SHOP
Irving Park Rd. Bridge	1660820132	2002	EXPANSION JOINT ASSEMBLY DETAILS	SHOP
Irving Park Rd. Bridge	1660820133	2002	EXPANSION JOINT ASSEMBLY DETAILS	SHOP
Irving Park Rd. Bridge	1660820134	2002	EXPANSION JOINT ASSEMBLY DETAILS	SHOP
Irving Park Rd. Bridge	1660820135	2002	EXPANSION JOINT ASSEMBLY DETAILS	SHOP
Irving Park Rd. Bridge	1660820136	2002	EXPANSION JOINT ASSEMBLY DETAILS	SHOP

Irving Park Rd. Bridge	1660820137	2002	EXPANSION JOINT ASSEMBLY DETAILS	SHOP
Irving Park Rd. Bridge	1660820138	2002	EXPANSION JOINT ASSEMBLY DETAILS	SHOP
Irving Park Rd. Bridge	1660820139	2002	EXPANSION JOINT ASSEMBLY DETAILS	SHOP
Irving Park Rd. Bridge	1660820140	2002	EXPANSION JOINT ASSEMBLY DETAILS	SHOP
Irving Park Rd. Bridge	1660820141	2002	EXPANSION JOINT ASSEMBLY DETAILS	SHOP
Irving Park Rd. Bridge	1660820142	2002	EXPANSION JOINT ASSEMBLY DETAILS	SHOP

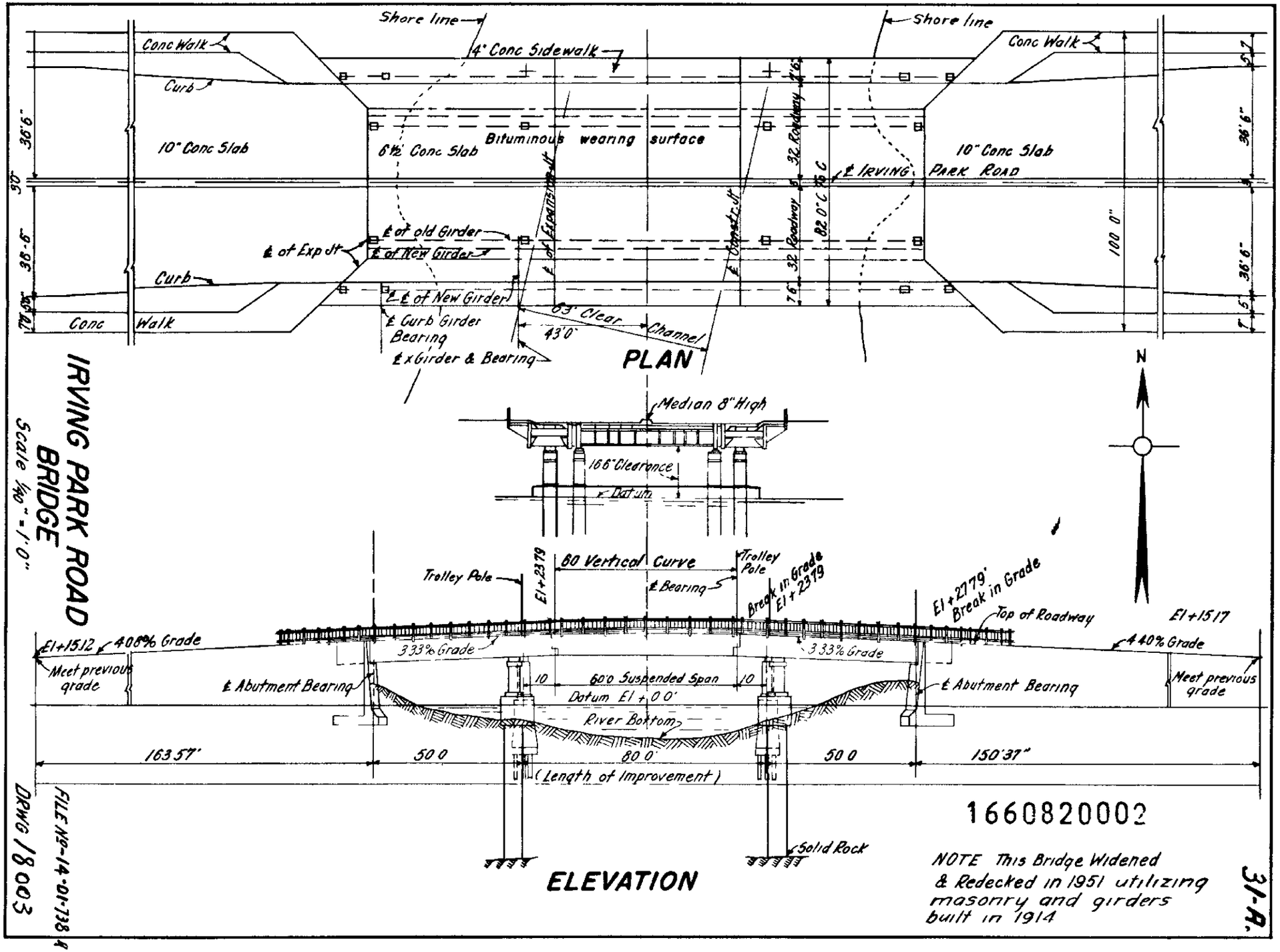

IRVING PARK ROAD BRIDGE

Scale 1/40" = 1'0"

1660820002

NOTE This Bridge Widened & Redecked in 1951 utilizing masonry and girders built in 1914

DRWG 18003

FILE No-14-01-138 A

31-A.

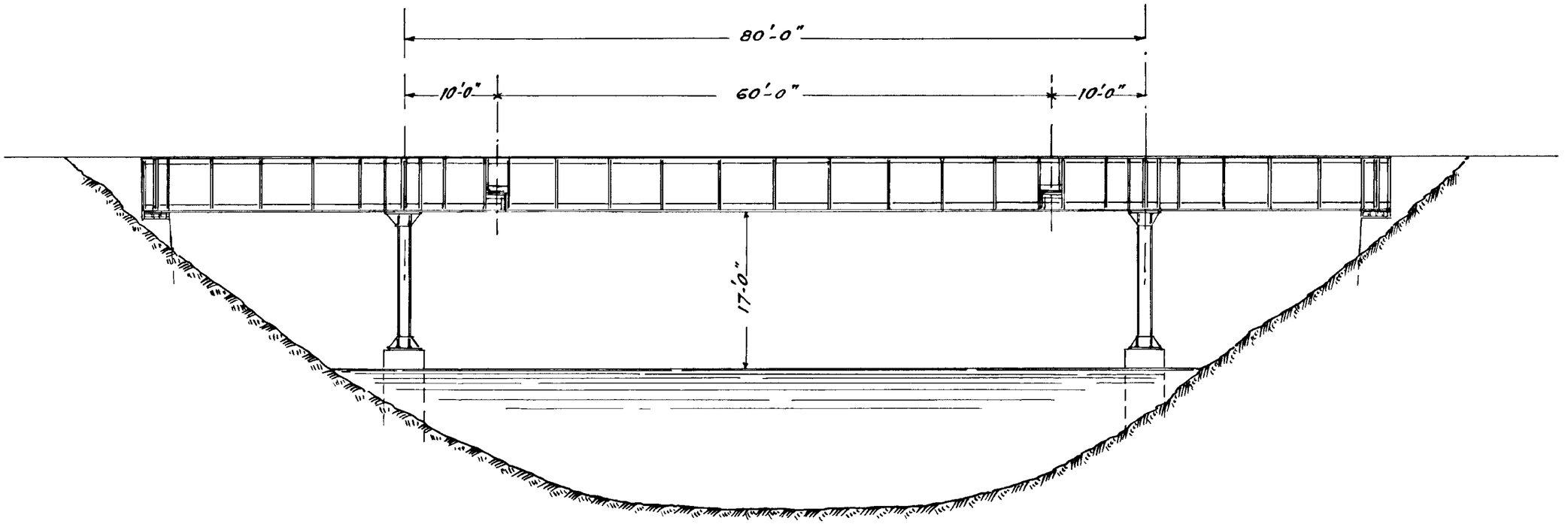

ELEVATION.

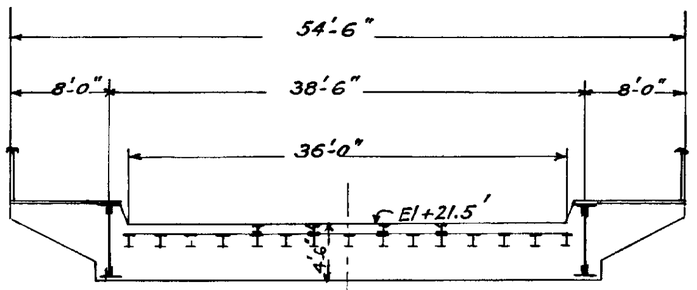

SECTION.

D2-c

IRVING PARK BOUL. BRIDGE.

Scale: 1" to 10 ft. March 1912.

1660820003

Drawing No. 11.
File No 15-02-343 J.A.

11"x18"

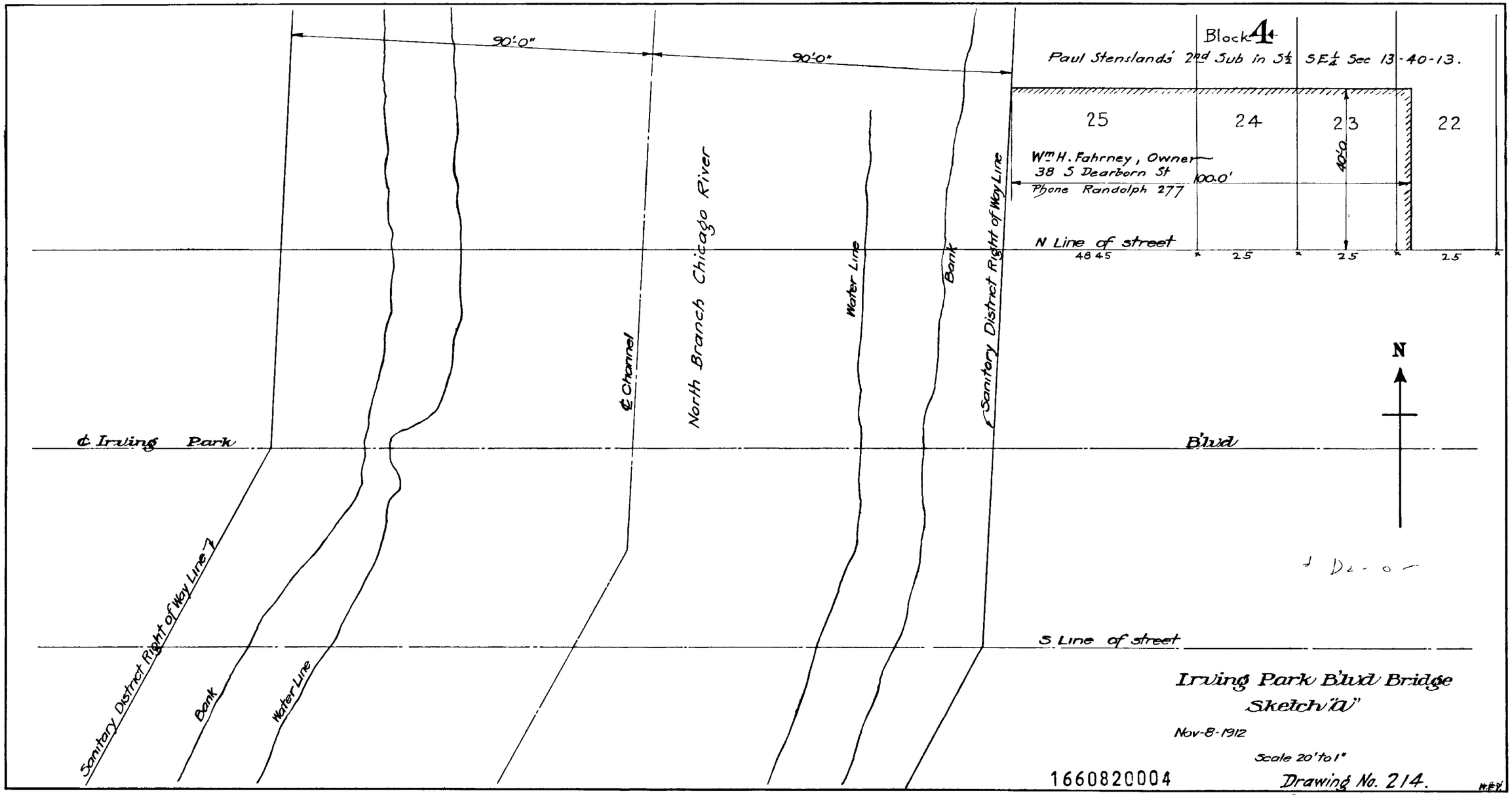
90'-0"
90'-0"
Block 4
Paul Stenslands' 2nd Sub in S½ SE¼ Sec 13-40-13.
25
24
23
22
Wm H. Fahrney, Owner
38 S Dearborn St
Phone Randolph 277
100.0'
40'-0
N Line of street
48 45
25
25
25
℄ Channel
North Branch Chicago River
Water Line
Bank
Sanitary District Right of Way Line
℄ Irving Park
Blvd
N
S Line of street
Sanitary District Right of Way Line
Bank
Water Line
Irving Park Blvd Bridge
Sketch "A"
Nov-8-1912
Scale 20' to 1"
1660820004
Drawing No. 214.
File № 15-02-344
11"x19"

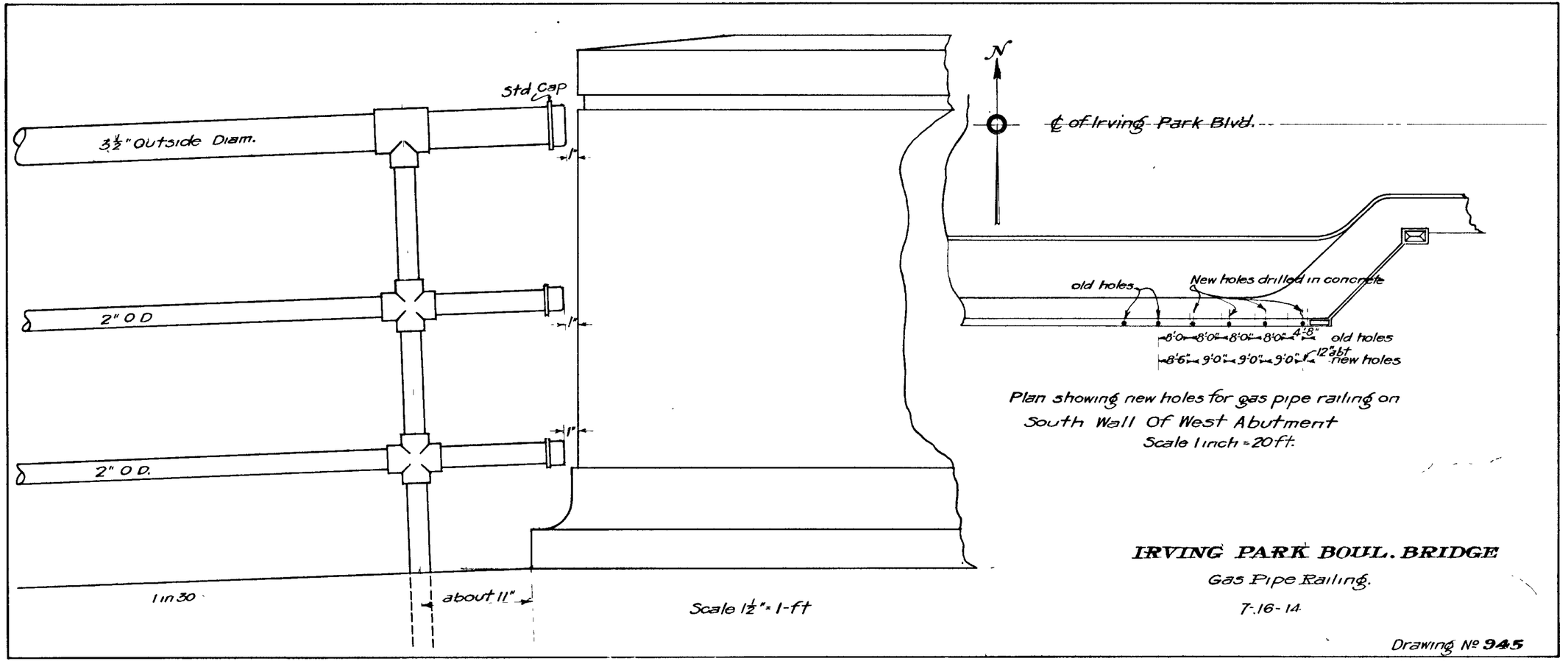

Plan showing new holes for gas pipe railing on South Wall Of West Abutment
Scale 1 inch = 20 ft.

IRVING PARK BOUL. BRIDGE

Gas Pipe Railing.

7-16-14

Drawing No 945

1660820005

File No. 35-102-345

Size 9"x20"

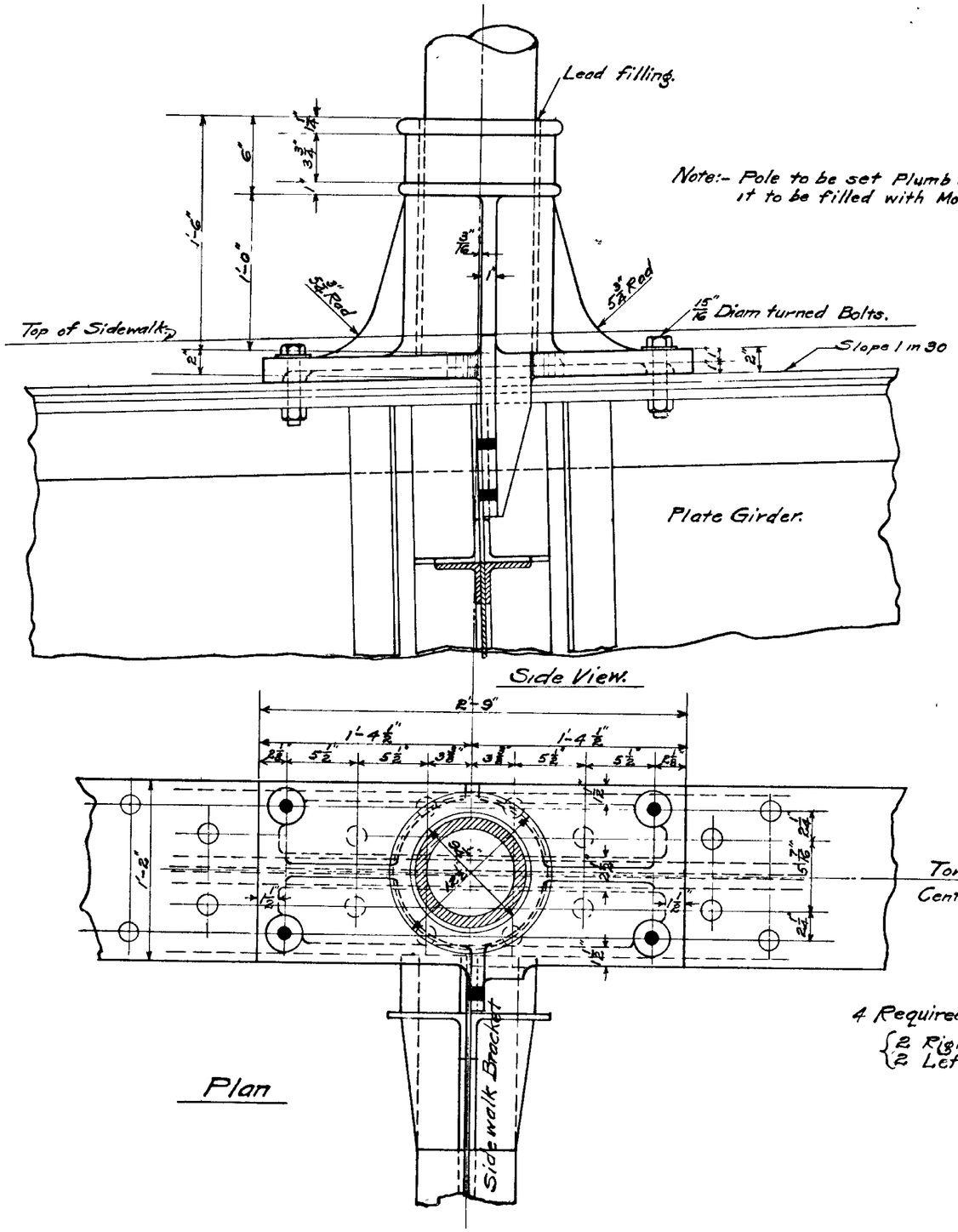

Note:- Pole to be set Plumb & Space around it to be filled with Molten Lead.

4 Required for each Bridge.
{2 Right as shown
2 Left opposite.}

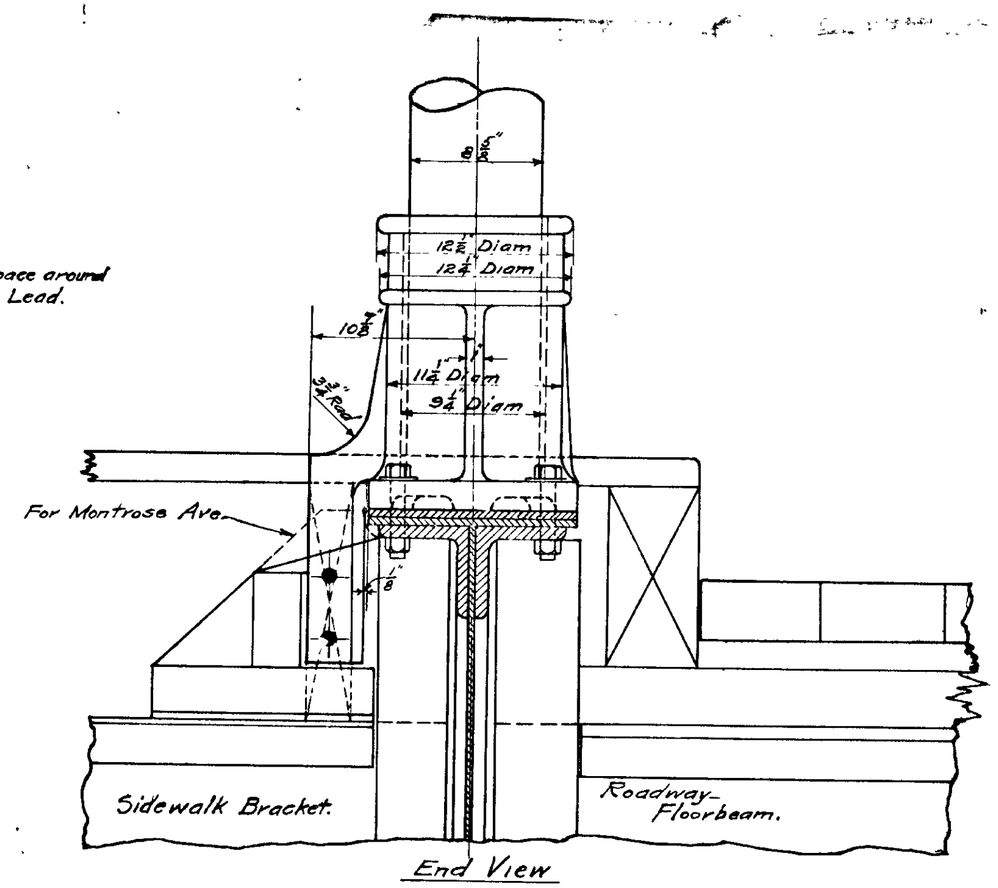

Details of Cast Steel Base for setting Trolley Poles on Steel Girders for Irving Park Boulevard Bridge and, Montrose Avenue Bridge.

Scale 1½" inch = One foot.

June 26th 1914

J. Agnew

1660820006

DRAWING No. 933
FILE No. 35-D2-346

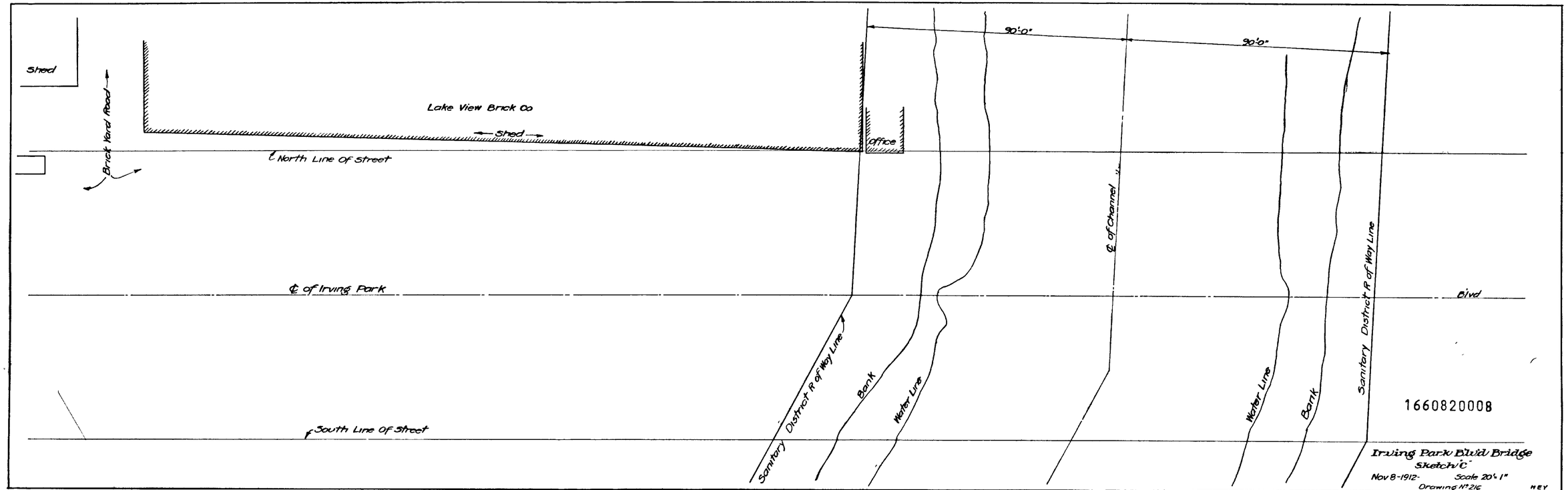
Shed
Brick Yard Road
Lake View Brick Co
Shed
Office
℄ North Line Of Street
90'-0"
90'-0"
℄ of Channel
℄ of Irving Park
Blvd
Sanitary District R of Way Line
Bank
Water Line
Water Line
Bank
Sanitary District R of Way Line
℄ South Line Of Street
1660820008
Irving Park Blvd Bridge
Sketch "C"
Nov 8-1912- Scale 20' 1"
Drawing N° 216
HEY
File N°: 15-03-704
Size 9"x27"

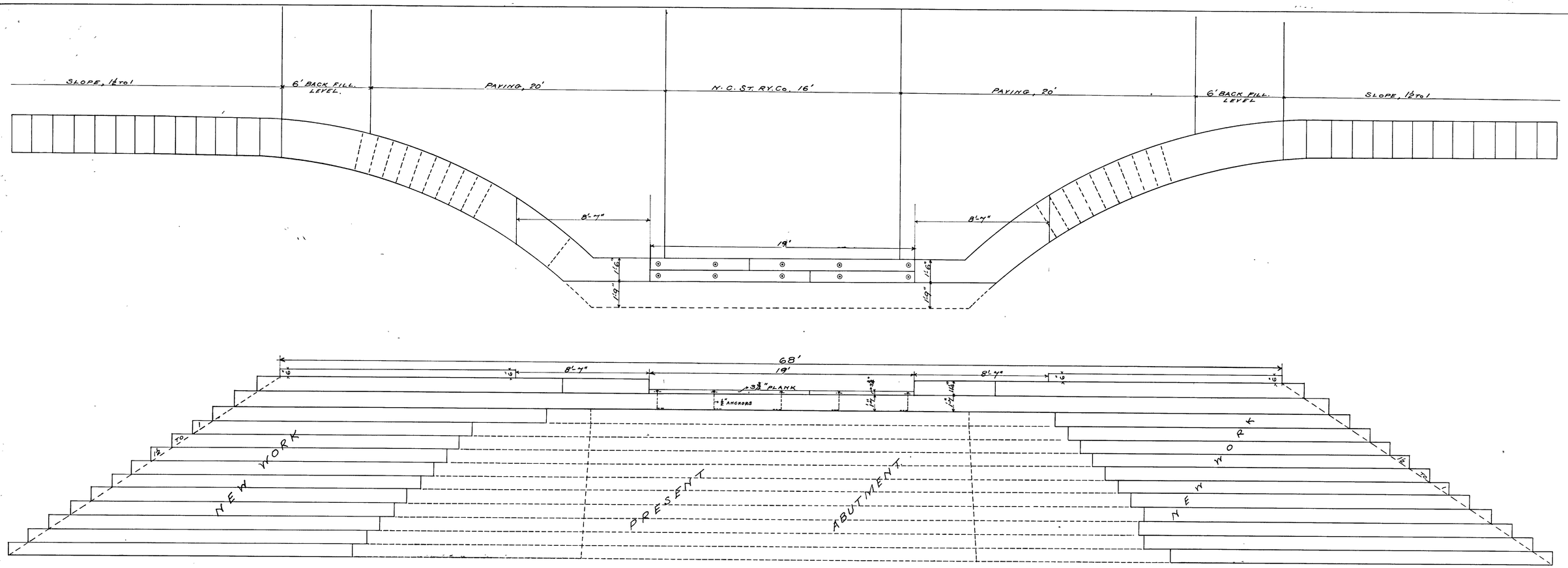

IRVING PARK BOUL'D BRIDGE

EXTENSION OF WING WALLS.

{31 CORDS} (MORE OR LESS) ALL LIMESTONE.

Approved [signature]

CITY ENGINEER

1660820009

DRAWING No 7493

FILE No 15-60-1

22'-0" Cent To Cent Of Girder

4'-6" 4'-6"

Center Of Track — Center Of Roadway — Center Of Track

Rails To Be Placed By St. Car Co

Top Of Roadway

7½" Cedar Block. (Rectangular)

5" Southern Pine 20'-0 Long.

2" Southern Pine Dressed On One Side To 1⅞"

3"x10" S. Pine.

3"x10" S. Pine.

3½"x3½"x⅜" Z Bars

⅞ Dia. Bolts

Gusset PL 11"x⅜"

3½"x3½"x⅜" Z Bars

⅞ Dia. Bolts

Gusset PL 11"x⅜"

4'-0"

4'-0"

6" Dia. Pipe

12" Dia. Pipe

3" Standard

3½"x3½"x⅜" Z Bars

2-15" I.-55# R.Ft.

2-15" I.-55# R.Ft.

Standard Connection L.s ⅜" Fillers Between Ls

3½"x3½"x⅜" Z Bars

3½"x3½"x⅜" Z Bars

Gusset PL 11"x⅜"

Gusset PL 11"x⅜"

2-⅞ Dia Bolt 3 Per Panel

2-⅞ Dia Bolt 3 Per Panel

2½"x2½"x⅜" Angles

2½"x2½"x⅜" Angles

2½"x2½"x⅜" Angles

2½"x2½"x⅜" Angles

Web 20"x⅜"

Web 22"x⅜"

2½"-3½"x3½"x⅜"

2½"-3½"x3½"x⅜"

2'-6"

2'-6"

1'-10½"

1'-10½"

Milled Joint

Milled Joint

12"

Top Of Serv.

1'-6" 2'-7½" 4'-9" 2'-1⅛" 2'-1⅛" 4'-9" 2'-7½" 1'-6"

6'-9" 11'-0" 11'-0" 6'-9"

Half Cross Section.

Half End View.

All Material Mild Steel. Holes Reamed

Rivets ⅞" Dia {Iron-Field / Steel-Shop}

17'-6"-12.25# R.Ft.

2 Lights 32 C.P.

5'-6" 5'-6"

19'-0"

Cross Section Showing Trolley Wire Support.

Top Of Roadway

Edge Of Side Walk.

Hand Rail.

Girder.

Wheel Guard.

62'-11" Face To Face Of Back Walls.

Face Of Back Wall

Face Of Back Wall

1'-6"

1'-6"

Center Line Of Bridge.

Half Plan.

Side View

CITY ENGINEER'S OFFICE.
CHICAGO. ILL.
IRVING PARK BOULEVARD
PLATE GIRDERS.
FOR FIXED SPAN OVER N. BRANCH.
SCALE 1"=1Ft. AND ⅜"=1Ft. MARCH 1897.
PLAN No 1. (2 PLANS).
CORRECT: A. Ziurys CITY BRIDGE ENG.
APPROVED: [illegible] CITY ENGINEER.

DRAWING No. 7494
FILE No 11-60-2

1660820010

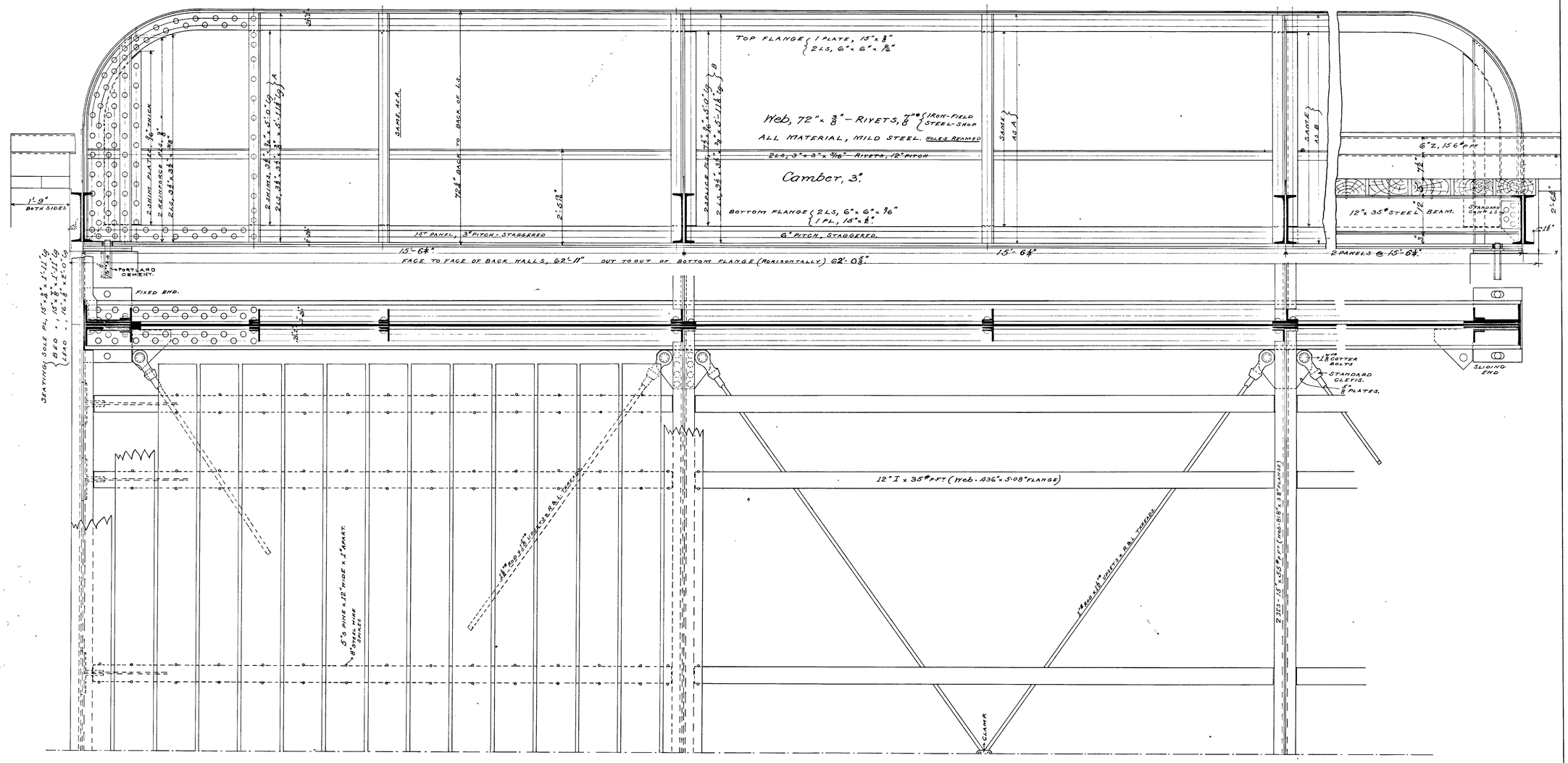

City Engineer's Office,
Chicago, Ill.
Irving Park Boulevard.
PLATE GIRDERS.
FOR FIXED SPAN OVER N BRANCH.
Scale, 1"=1' March, 1897.
Plan No 2 (2 Plans).
Correct, [illegible] Assistant Bridge Engr.
approved, [illegible]
City Engineer.
DRAWING No. 7495
FILE No 11-60-3

1660820011

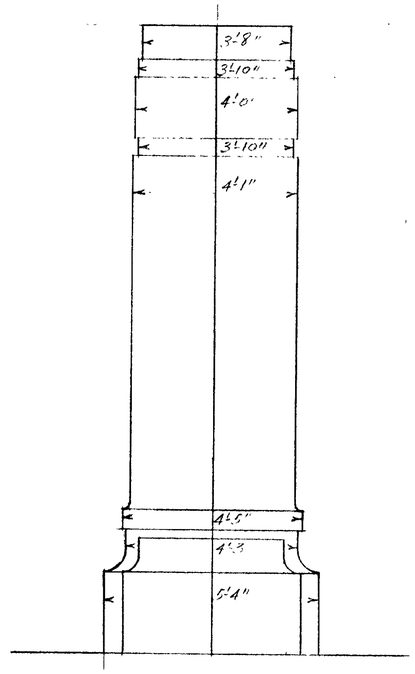

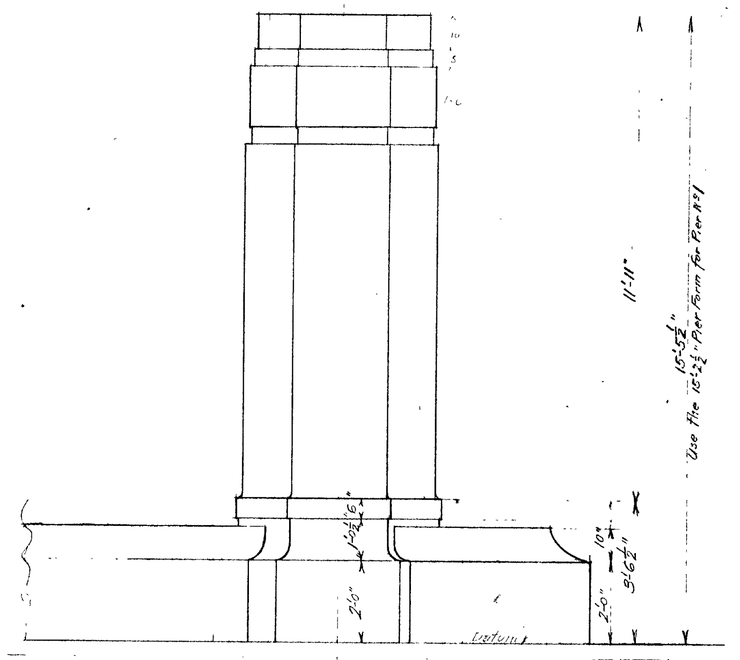

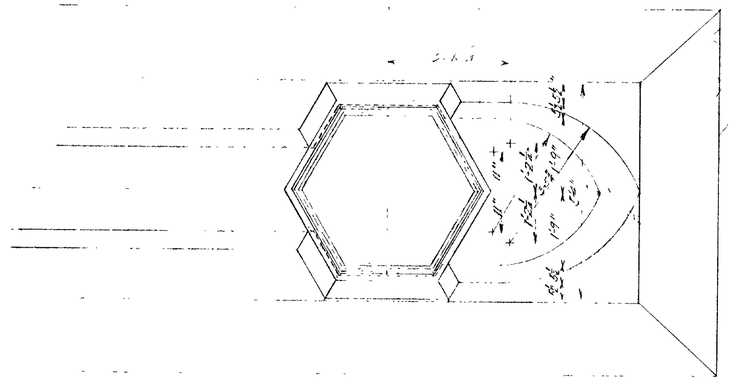

1660820012

DRAWING Nº 7496
FILE Nº 35-60-4

(IRVING PARK PIERS REVISED)

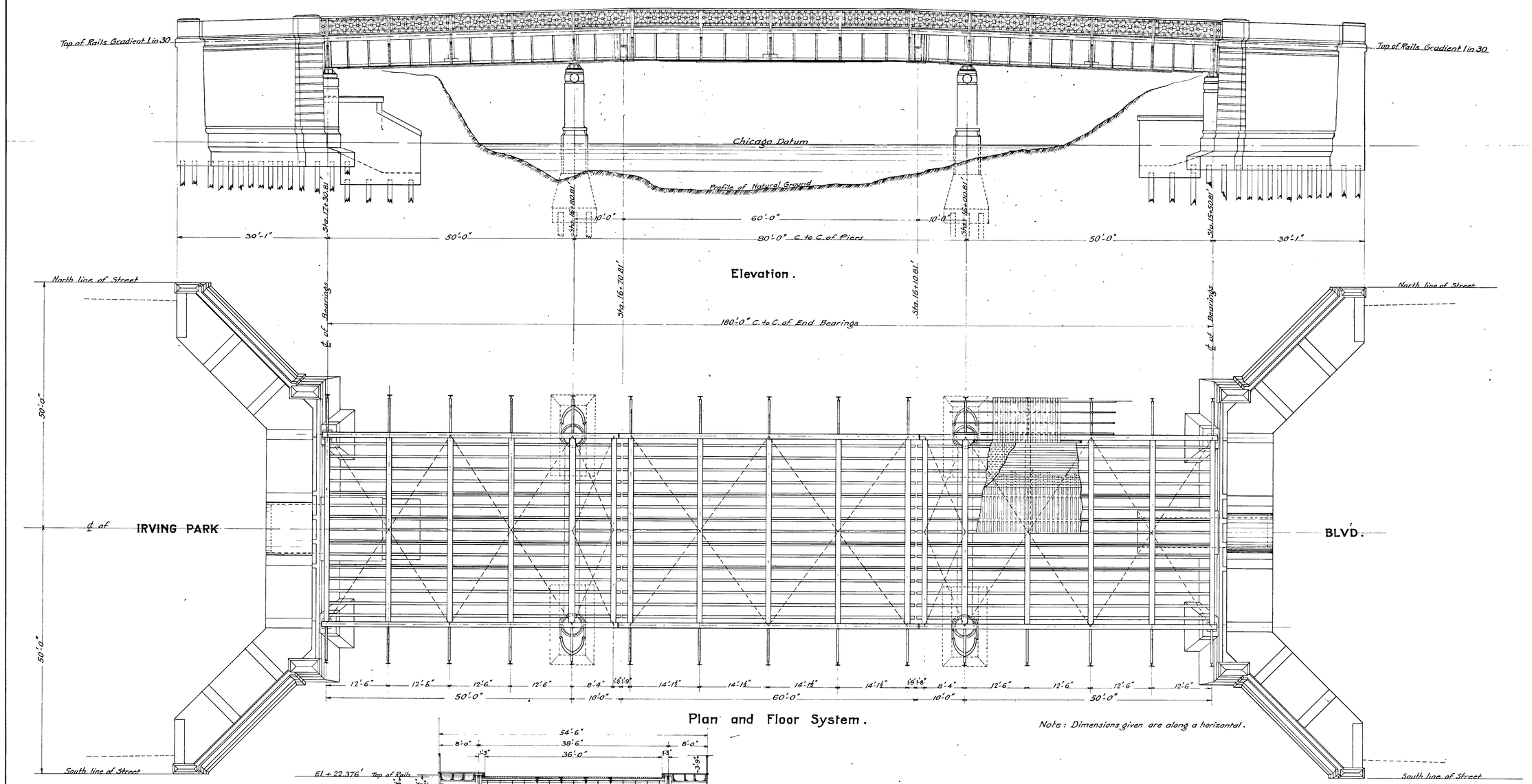

Plan and Floor System.

Note: Dimensions given are along a horizontal.

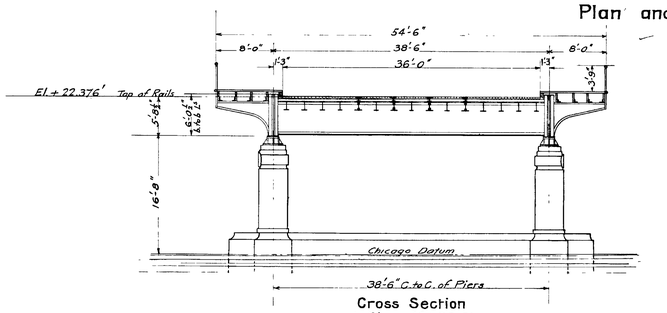

Cross Section
at Sta. 16+80.81.

Correct Alexander von Babo
Engineer of Bridge Design.

Approved Alonzo J. Hammond
Engineer in charge of Bridges & Harbor.

Approved [signature]
City Engineer.

Approved [signature]
Commissioner of Public Works.

CITY OF CHICAGO
DEPARTMENT OF PUBLIC WORKS
BUREAU OF ENGINEERING
DIVISION OF BRIDGES AND HARBOR

IRVING PARK BOULEVARD BRIDGE

OVER THE NORTH BRANCH OF THE CHICAGO RIVER

GENERAL PLAN

Scale ⅛" to 1 ft. December, 1912.

Drawn by H.E.Y.
Traced by N.P.C.
Checked by H.E.Y.

Drawing No. 162
File No. 11-60-5

1 OF 13

1660820013

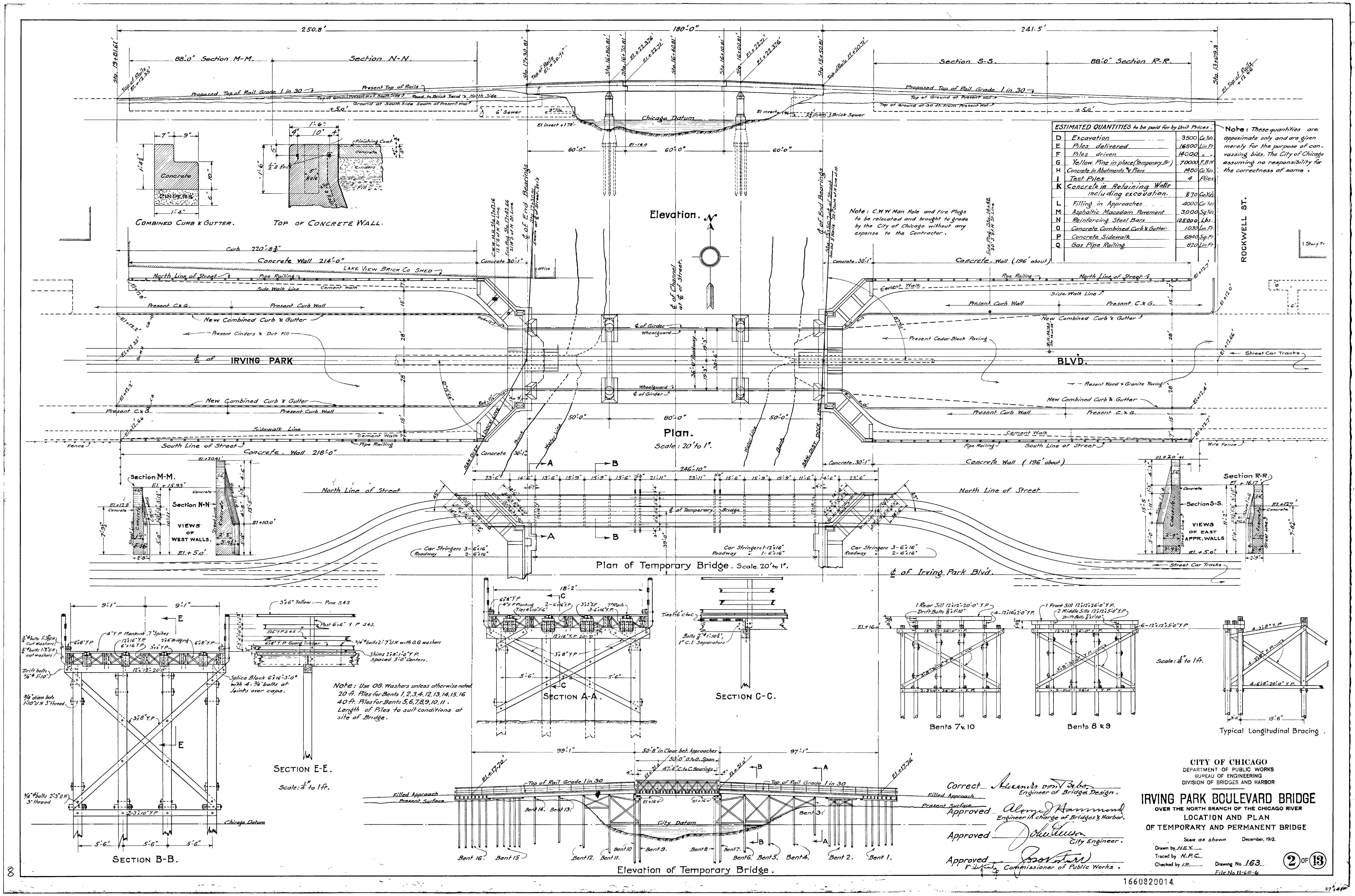

ESTIMATED QUANTITIES to be paid for by Unit Prices.

D	Excavation	3500	Cu Yds.
E	Piles delivered	16500	Lin Ft.
F	Piles driven	14000	" "
G	Yellow Pine in place (Temporary Br.)	70000	F.B.M.
H	Concrete in Abutments & Piers	1480	Cu Yds.
I	Test Piles	4	Piles
K	Concrete in Retaining Walls including excavation.	870	Cu Yds.
L	Filling in Approaches	4000	Cu Yds.
M	Asphaltic Macadam Pavement	3000	Sq Yds.
N	Reinforcing Steel Bars	125000	Lbs.
O	Concrete Combined Curb & Gutter	1030	Lin. Ft.
P	Concrete Sidewalk	6840	Sq. Ft.
Q	Gas Pipe Railing	820	Lin Ft.

Note: These quantities are approximate only and are given merely for the purpose of canvassing bids. The City of Chicago assuming no responsibility for the correctness of same.

Correct Alexander von Babo, Engineer of Bridge Design.
Approved Alonzo J. Hammond, Engineer in charge of Bridges & Harbor.
Approved John Ericson, City Engineer.
Approved [signature], Commissioner of Public Works.

CITY OF CHICAGO
DEPARTMENT OF PUBLIC WORKS
BUREAU OF ENGINEERING
DIVISION OF BRIDGES AND HARBOR

IRVING PARK BOULEVARD BRIDGE

OVER THE NORTH BRANCH OF THE CHICAGO RIVER

LOCATION AND PLAN OF TEMPORARY AND PERMANENT BRIDGE

Scale as shown December, 1912.

Drawn by H.E.Y.
Traced by N.P.C.
Checked by I.P.
Drawing No. 163
File No. 11-60-6

2 OF 13

8

1660820014

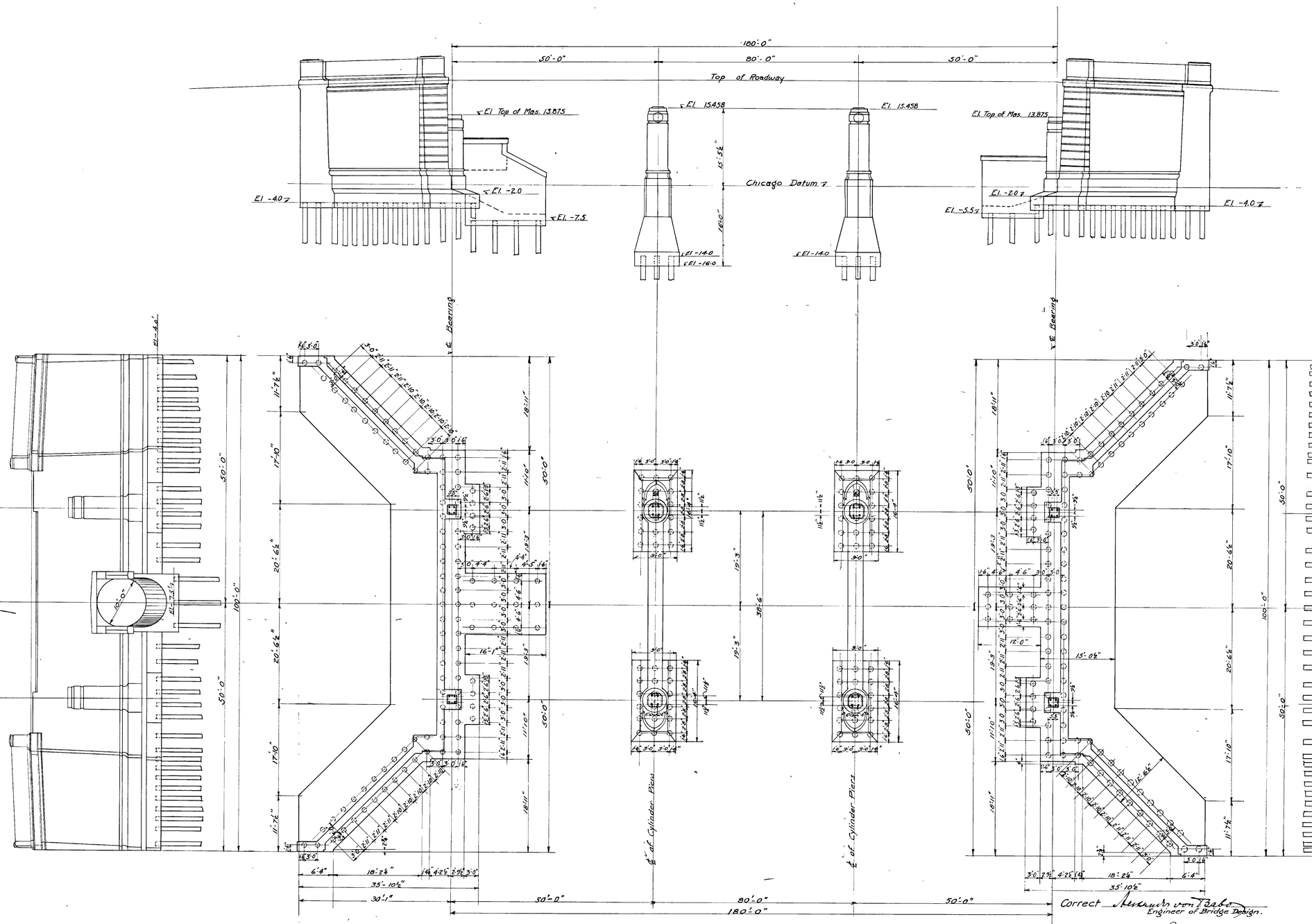

CITY OF CHICAGO
DEPARTMENT OF PUBLIC WORKS
BUREAU OF ENGINEERING
DIVISION OF BRIDGES AND HARBOR

IRVING PARK BOULEVARD BRIDGE

OVER THE NORTH BRANCH OF THE CHICAGO RIVER

SUBSTRUCTURE

Piling Plan

Scale 1/8" to 1 ft. December, 1942.

Drawn by H.E.Y.
Traced by C.A.A.
Checked by J.P.

Drawing No. 225
File No. 11-60-7

3 OF 13

Correct Alexander von Babo
Engineer of Bridge Design.

Approved Alonzo J. Hammond
Engineer in charge of Bridges & Harbor.

Approved _____
City Engineer.

Approved _____
Commissioner of Public Works.

1660820015

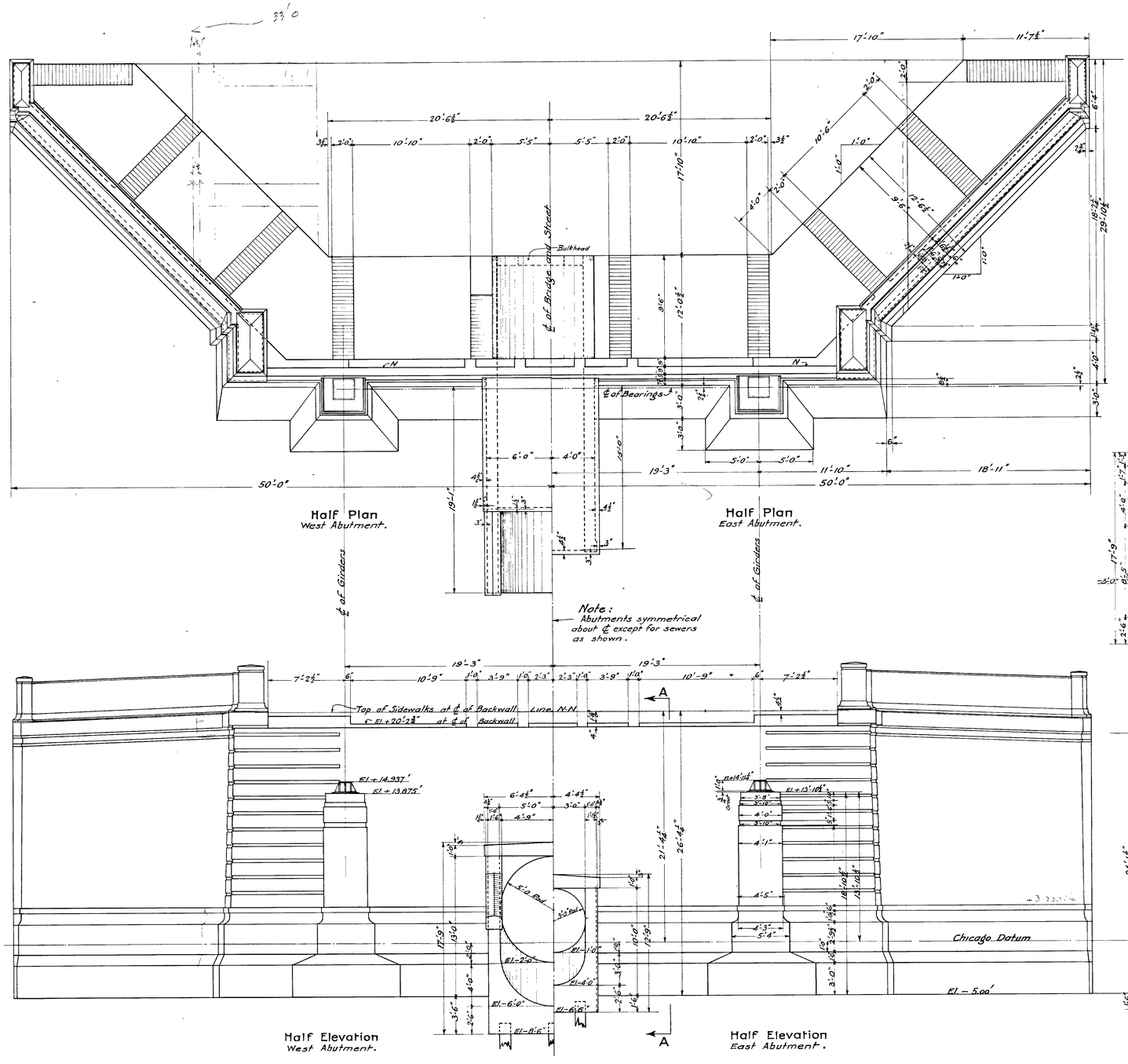

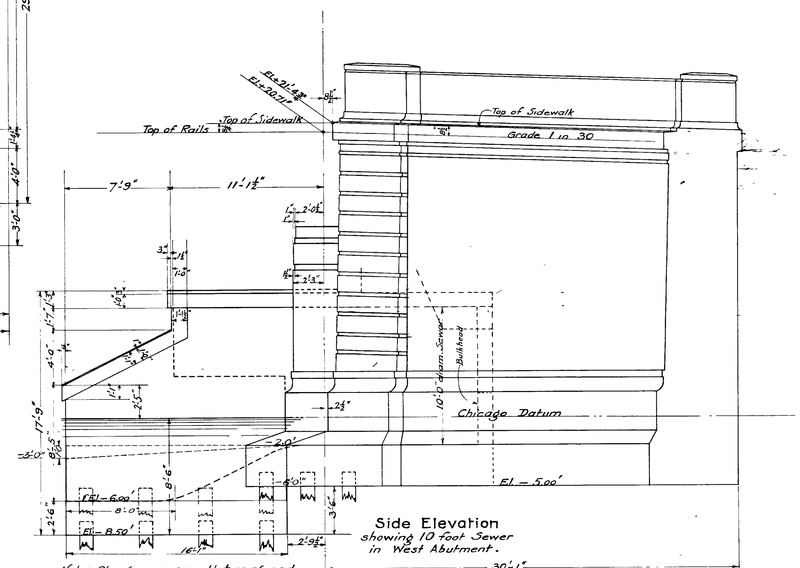

Note: Change in sewer outlet as agreed upon by Mr Ericson April 17-1914

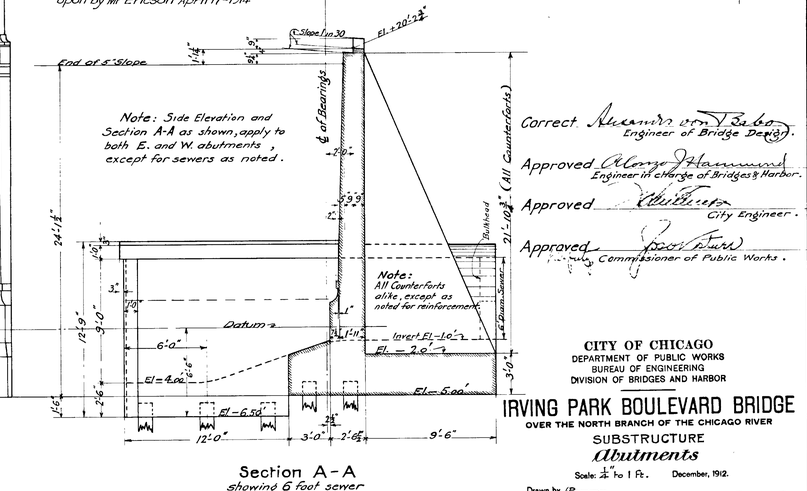

Correct Alexander von Babo
Engineer of Bridge Design.

Approved Alonzo J. Hammond
Engineer in charge of Bridges & Harbor.

Approved _____
City Engineer.

Approved _____
Commissioner of Public Works.

CITY OF CHICAGO
DEPARTMENT OF PUBLIC WORKS
BUREAU OF ENGINEERING
DIVISION OF BRIDGES AND HARBOR

IRVING PARK BOULEVARD BRIDGE

OVER THE NORTH BRANCH OF THE CHICAGO RIVER

SUBSTRUCTURE

Abutments

Scale: 1" to 1 Ft. December, 1912.

Drawn by LP
Traced by N.P.G.
Checked by E.S

Drawing No. 164
File No. 11-60-A

4 OF 13

1660820016

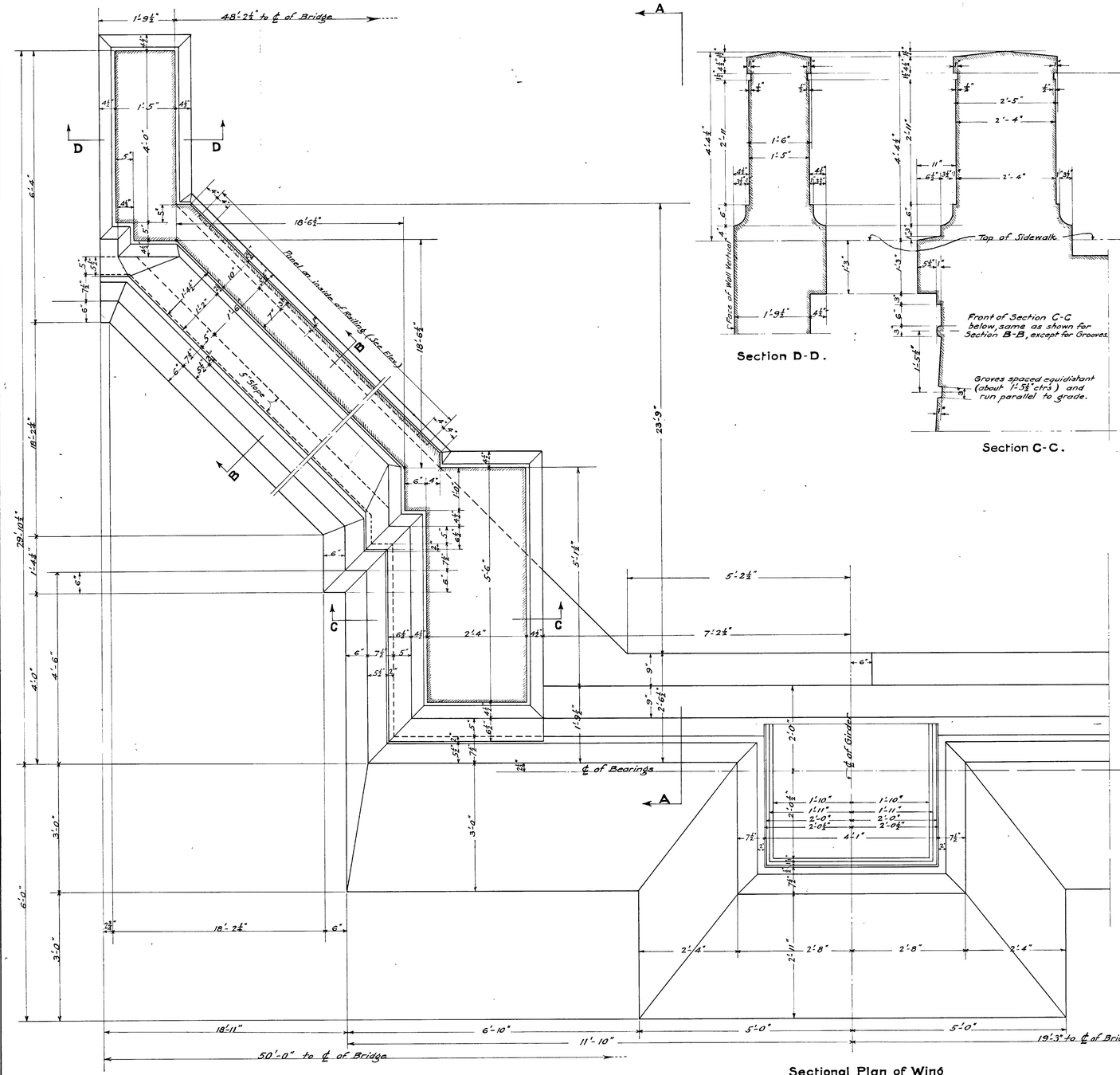

Sectional Plan of Wing
(Footing and Counterforts in rear not shown)

Section D-D.

Section C-C.

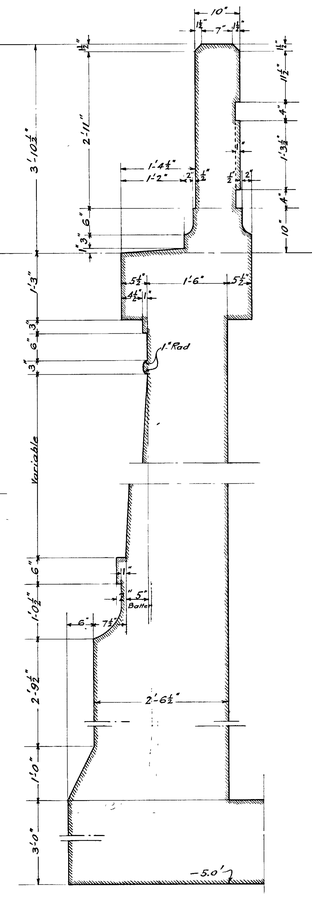

Section B-B.

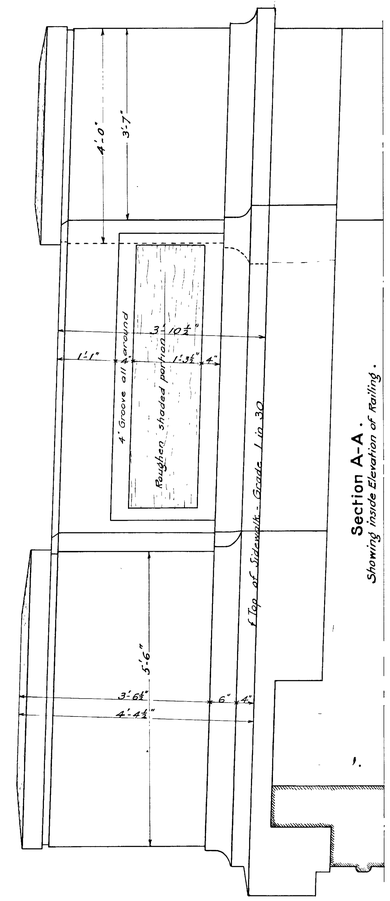

Section A-A.
Showing inside Elevation of Railing.

Correct Alexander von Babo
Engineer of Bridge Design.

Approved Alonzo J. Hammond
Engineer in Charge of Bridges & Harbor.

Approved [illegible]
City Engineer.

Approved [illegible]
Commissioner of Public Works.

CITY OF CHICAGO
DEPARTMENT OF PUBLIC WORKS
BUREAU OF ENGINEERING
DIVISION OF BRIDGES AND HARBOR

IRVING PARK BOULEVARD BRIDGE
OVER THE NORTH BRANCH OF THE CHICAGO RIVER

SUBSTRUCTURE

Abutment Details

Scale 1" to 1 Ft. December, 1912.

Drawn by LP
Traced by H.P.C.
Checked by E.S.
Drawing No. 226
File No. 11-60-9

5 OF 13

1660820017

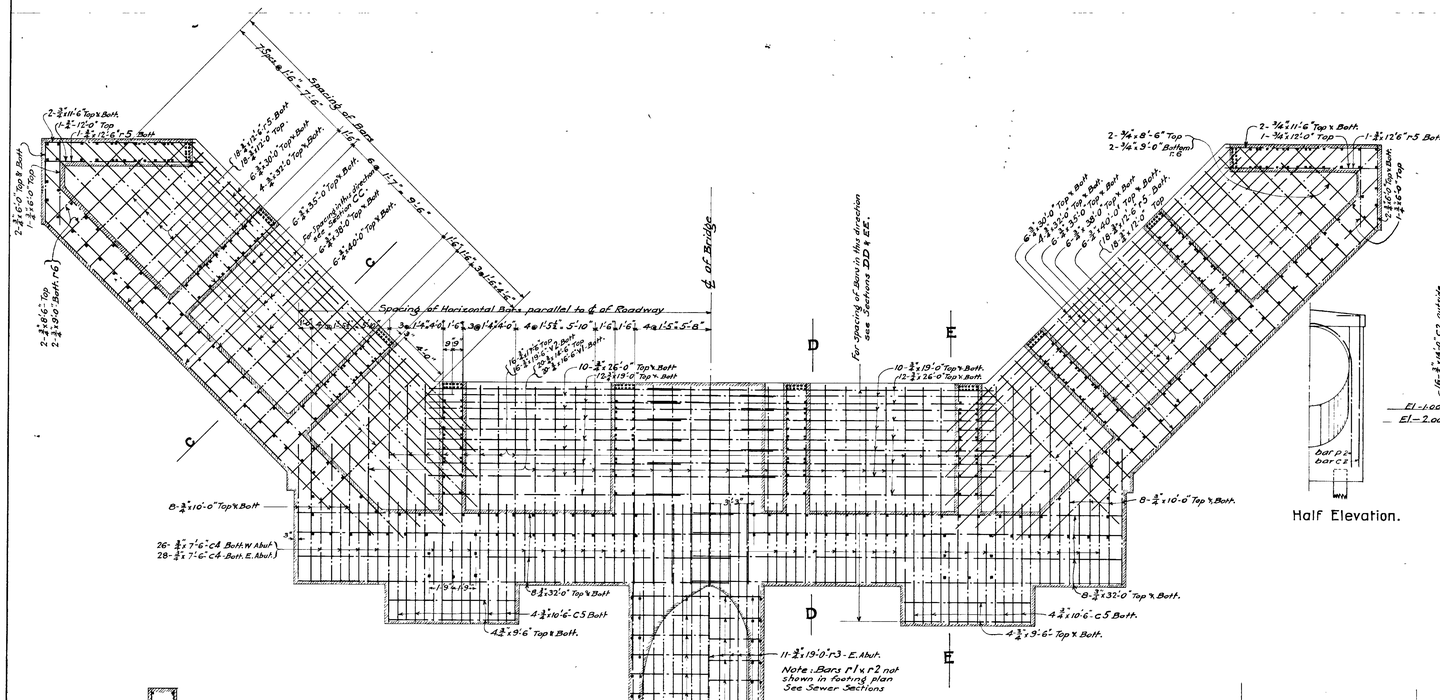

PLAN OF FOOTING BARS.
Section taken at El. – 2.00' showing half plan of 10' Sewer and half plan of 6' Sewer.

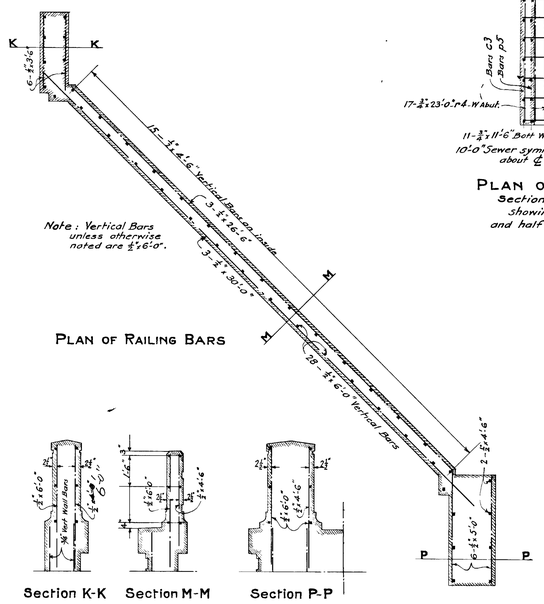

PLAN OF RAILING BARS

Section K-K Section M-M Section P-P

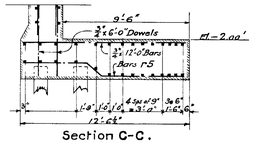

Section C-C.

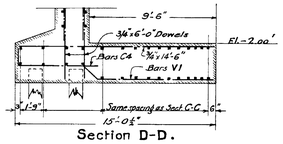

Section D-D.

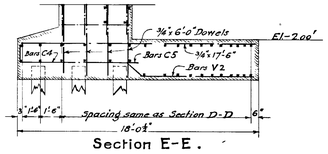

Section E-E.

Half Elevation.

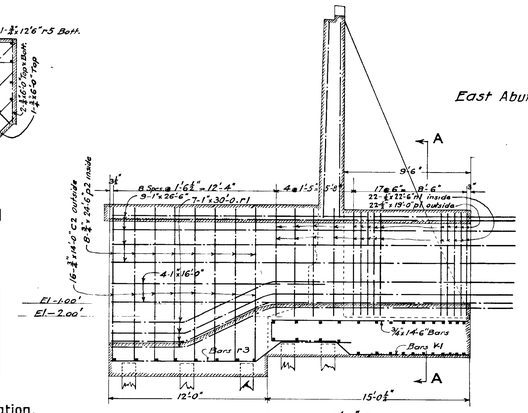

Section through 6'-0" Sewer, Showing Sewer Reinforcement.

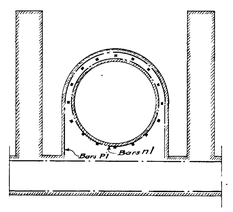

Section A-A.

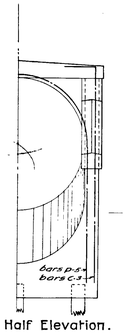

Half Elevation.

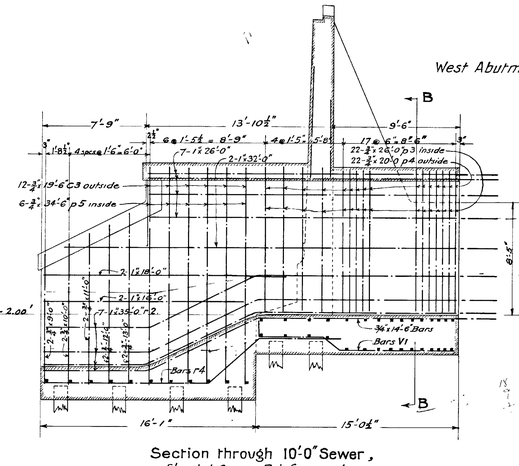

Section through 10'-0" Sewer, Showing Sewer Reinforcement.

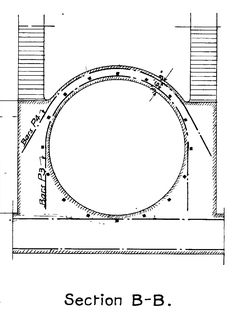

Section B-B.

Construction Notes:

All bars to be plain square bars as shown ——.
Splices to be made by overlapping and wiring.
Minimum laps for ½" bars = 2'0"
" " " ⅝" " = 2'6"
" " " 1" " = 3'6"
Make all bends to a radius of 12 diameter, unless otherwise noted.
Vertical overnight construction joints may be made in footing midway between counterforts; no horizontal joints permissible.
Horizontal overnight construction joints may be made in walls and counterforts when convenient but must not be made too close to bridge seat; no vertical joints permissible.
Use blocks in wall construction joints.

Detail of Key Blocks.

Correct — Engineer of Bridge Design.
Approved — Engineer in charge of Bridges & Harbor.
Approved — City Engineer.
Approved — Commissioner of Public Works.

CITY OF CHICAGO
DEPARTMENT OF PUBLIC WORKS
BUREAU OF ENGINEERING
DIVISION OF BRIDGES AND HARBOR

IRVING PARK BOULEVARD BRIDGE
OVER THE NORTH BRANCH OF THE CHICAGO RIVER

SUBSTRUCTURE
Reinforcing Bars

Scale: 1" to 1 Ft. December, 1912.
Drawn by LP
Traced by N.P.C.
Checked by M.E.V.
Drawing No. 165
File No 11-60-10

6 OF 13

1660820018

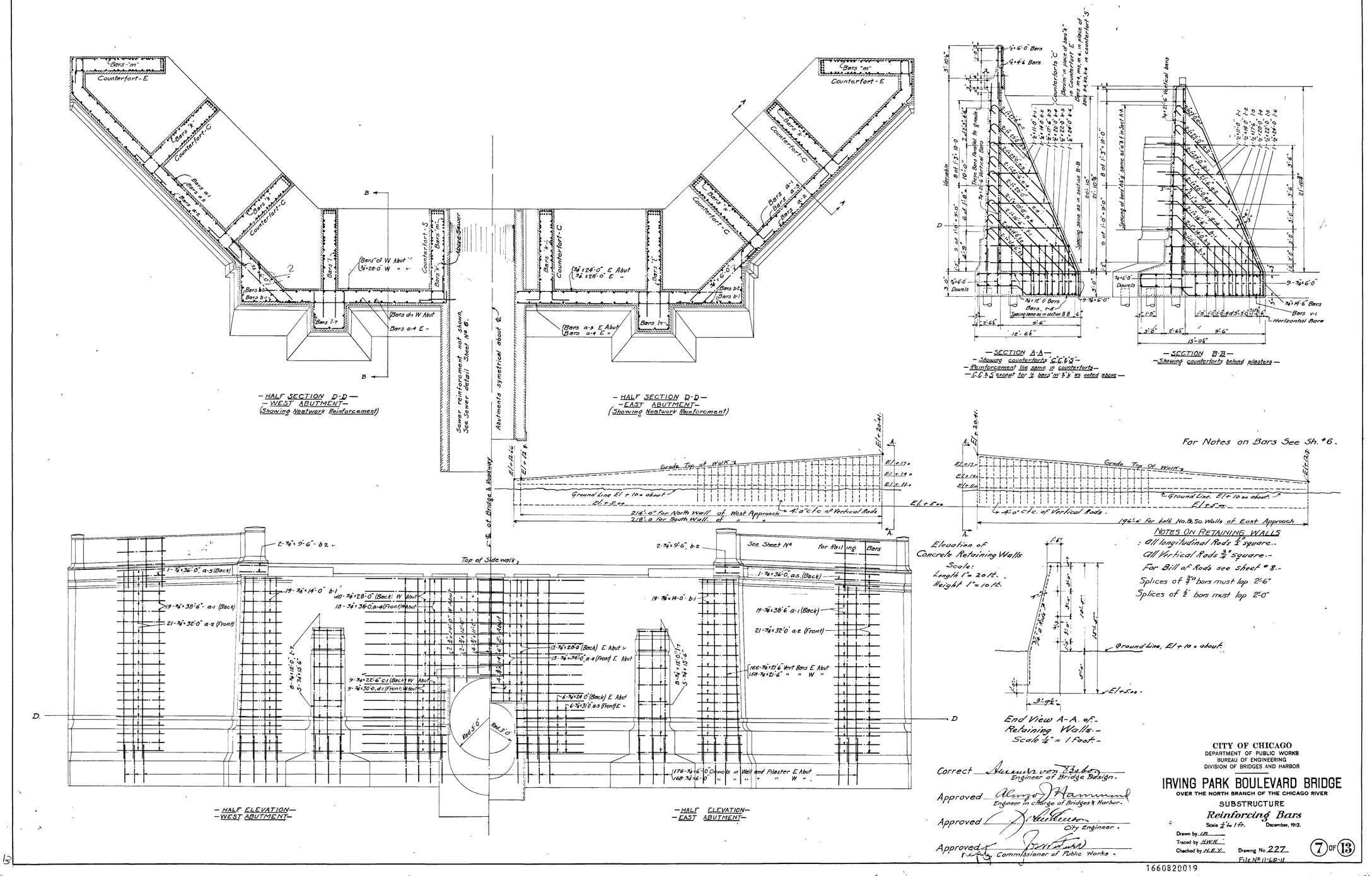

- HALF SECTION D-D -
- WEST ABUTMENT -
(Showing Neatwork Reinforcement)

- HALF SECTION D-D -
- EAST ABUTMENT -
(Showing Neatwork Reinforcment)

- HALF ELEVATION -
- WEST ABUTMENT -

- HALF ELEVATION -
- EAST ABUTMENT -

- SECTION A-A -
- Showing counterforts "C.E.&S" -
- Reinforcement the same in counterforts -
- C.E.&S except for ½" bars "m" & "k" as noted above -

- SECTION B-B -
- Showing counterforts behind pilasters -

For Notes on Bars See Sh. #6.

Elevation of Concrete Retaining Walls
Scale:
Length 1" = 20 ft.
Height 1" = 10 ft.

NOTES ON RETAINING WALLS
: All longitudinal Rods ½" square.
All Vertical Rods ¾" square.
For Bill of Rods see sheet #8.
Splices of ¾" bars must lap 2'-6"
Splices of ½" bars must lap 2'-0"

End View A-A. of Retaining Walls.
Scale ¼" = 1 Foot.

Correct [signature] Engineer of Bridge Design.
Approved [signature] Engineer in charge of Bridges & Harbor.
Approved [signature] City Engineer.
Approved [signature] Commissioner of Public Works.

CITY OF CHICAGO
DEPARTMENT OF PUBLIC WORKS
BUREAU OF ENGINEERING
DIVISION OF BRIDGES AND HARBOR

IRVING PARK BOULEVARD BRIDGE
OVER THE NORTH BRANCH OF THE CHICAGO RIVER
SUBSTRUCTURE
Reinforcing Bars
Scale ¼" to 1 ft. December, 1912.
Drawn by I.R.
Traced by H.W.H.
Checked by H.E.Y.
Drawing No. 227
File No. 11-60-11
7 OF 13

1660820019

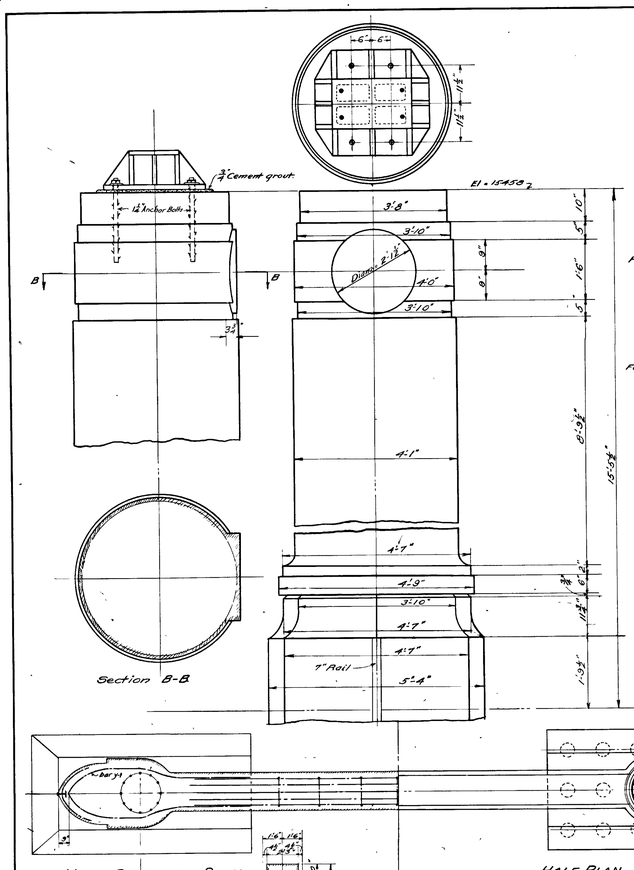

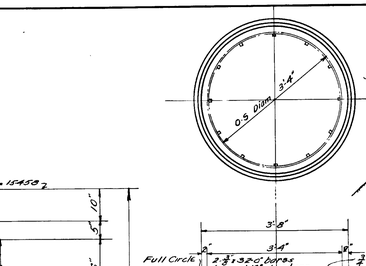

Detail Showing Spiral Reinf at Top of Pier.

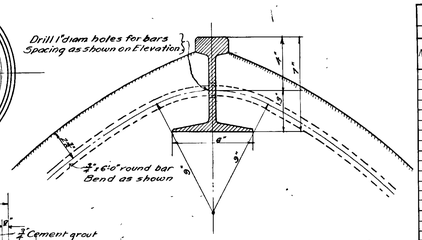

Rail Section 80 No 335. 80 lbs per yard of the Lorain Steel Co. or similar section subject to the approval of the Commissioner of Public Works

Detail Showing Rail at End of Pier.
Scale 3"=1'0"

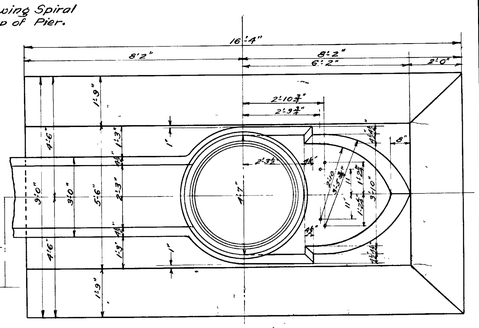

PLAN
Scale ¾"=1'0"

For notes on reinforcing bars see Sheet № 6.

Scale ¼"=1 Foot.

BILL OF BARS

Number	Size Sq Bars	Length	Abutments Location: Footing	Wall	Counter forts	Abutment	Sewer	Railing	Weight
24	¾"	3'-6"						24	
68	"	4'-6"						68	
24	"	5'-0"						24	
112	"	6'-0"						112	
20	"	11'-0"			20				
20	"	14'-0"			20				
20	"	17'-6"			20				
22	"	19'-0"					22		
20	"	20'-0"			20				
20	"	22'-0"			20				
22	"	22'-6"					22		
20	"	24'-0"			20				
12	"	26'-6"						12	
12	"	30'-0"						12	
710	⅜"	6'-0"	710						
62	"	7'-6"	62						
8	"	8'-6"	8						
10	"	9'-0"	8					2	
24	"	9'-6"	16	8					
34	"	10'-0"	32					2	
16	"	10'-6"	16						
2	"	11'-0"						2	
19	"	11'-6"	19						
110	"	12'-0"	76				32	2	
76	"	12'-6"	76						
2	"	13'-0"						2	
92	"	14'-0"		76				16	
40	"	14'-6"	40						
20	"	15'-6"				20			
40	"	16'-6"	40						
32	"	17'-6"	32						
55	"	19'-0"	55						
44	"	19'-6"	32				12		
22	"	20'-0"					22		
324	"	21'-6"		324					
18	"	22'-6"		18					
17	"	23'-0"	17						
12	"	24'-0"		12					
8	"	24'-6"					8		
66	"	26'-0"	44				22		
46	"	28'-0"		46					
42	"	30'-0"	24	18					
12	"	31'-0"		12					
132	"	32'-0"	48	84					
4	"	33'-6"		4					
6	"	34'-6"					6		
24	"	35'-0"	24						
24	"	36'-0"	24						
76	"	38'-6"		76					
24	"	39'-0"	24						
46	"	36'-0"		46					
40	1"	11'-6"			40				
40	"	14'-0"			40				
6	"	16'-0"					6		
40	"	16'-6"			40				
40	"	19'-0"			40				
40	"	20'-0"			40				
40	"	21'-6"			40				
40	"	23'-0"			40				
40	"	25'-0"			40				
7	"	26'-0"					7		
9	"	26'-6"					9		
40	"	27'-0"			40				
7	"	30'-0"					7		
2	"	32'-0"					2		
7	"	33'-0"					7		
2	"	18'-0"					2		

PIERS

Number	Size	Length	Location	Weight
46	1"	30'0"	Cylinder	
18	⅜"	30'6"	Strut	
16	¾"	28'0"	Pier	
24	⅞"	6'C"	Pier	
18	¾"	21'6"	Strut	
12	¾"	13'0"	Cylinder	
8	¾"	32'0"	Cylinder	
6	¾"	34'0"	Strut	

RETAINING WALLS.-

Number	Size	Length	Location	Weight
2	½" a	213'6	West Walls Horizontal	
2	½" a	125'0	" " "	
2	½" a	40'0	" " "	
4	½" a	213'9	" " Top of Walls	
28	¾" a	10'4 to 10'9	" " Vertical	
2	½" a	195'6	East Walls Horizontal	
2	½" a	125'0	" " "	
2	½" a	40'0	" " "	
4	½" a	192'6	" " Top of Walls	
26	¾" a	14'9 to 10'9	" " Vertical	

Note. Lengths given for longitudinal bars are Net laps for Splices to be according to Note Sht № 7

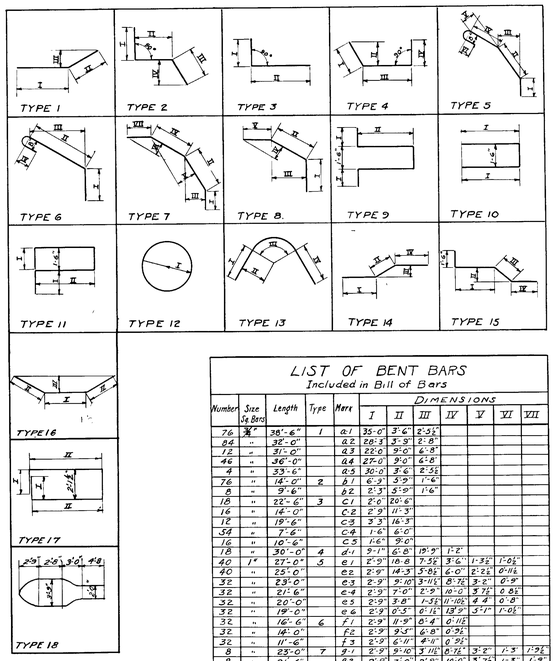

LIST OF BENT BARS
Included in Bill of Bars

Number	Size Sq Bars	Length	Type	Mark	Dimensions I	II	III	IV	V	VI	VII
76	¾"	38'-6"	1	a1	35'-0"	3'-6"	2-3½				
84	"	32'-0"		a2	26'-1	3'-9"	2'-8"				
12	"	31'-0"		a3	22'-0	9'-0"	6'-8"				
46	"	36'-0"		a4	27'-0"	9'-0"	6'-8"				
4	"	33'-6"		a5	30'-0"	3'-6"	2-3½				
76	"	14'-0"	2	b1	6'-3"	3'-9"	1'-6"				
8	"	9'-6"		b2	2'-3"	5'-9"	1'-6"				
18	"	22'-6"	3	c1	2'-0"	20'-6"					
16	"	14'-0"		c2	2'-9"	11'-3"					
12	"	19'-6"		c3	2'-3"	16'-3"					
54	"	7'-6"		c4	1'-6"	6'-0"					
16	"	10'-6"		c5	1'-6"	9'-0"					
18	"	30'-0"	4	d1	9'-1"	6'-8"	19'-9"	1'-2"			
40	1"	27'-0"	5	e1	2'-9"	18'-8"	7'-5½	3'-6"	1'-3½	1'-0½	
40	"	25'-0"		e2	2'-9"	14'-3"	5'-8½	6'-0"	2'-2½	0'-11½	
32	"	23'-0"		e3	2'-9"	9'-10"	3'-11½	8'-7½	3'-2"	0'-9"	
32	"	21'-6"		e4	2'-9"	7'-0"	2'-9"	10'-0"	3'-7½	0'-8½	
32	"	20'-0"		e5	2'-9"	3'-8"	1'-5½	11'-10½	4'-4"	0'-8"	
32	"	19'-0"		e6	2'-9"	0'-5"	0'-1½	13'-3"	3'-1½	1'-0½	
32	"	16'-6"	6	f1	2'-9"	11'-9"	0'-1½				
32	"	16'-0"		f2	2'-9"	9'-5"	6'-8"	0'-9½			
32	"	11'-6"		f3	2'-9"	6'-11"	4'-1"	0'-9½			
8	"	23'-0"	7	g1	2'-9"	9'-10"	3'-11½	8'-7½	3'-2"	1'-3	1'-9½
8	"	21'-6"		g2	2'-9"	7'-0"	2'-9"	10'-0"	3'-7½	1'-3	1'-9"
8	"	20'-0"		g3	2'-9"	3'-8"	1'-5½	11'-10½	4'-4"	1'-2½	1'-8½
8	"	19'-0"		g4	2'-9"	0'-5"	0'-1½	13'-3"	3'-1"	1'-5½	2'-1"
8	"	16'-6"	8	h1	2'-9"	11'-9"	6'-8"	1'-5"	2'-0"		
8	"	14'-0"		h2	2'-9"	9'-5"	6'-8"	1'-3"	1'-10"		
8	"	11'-6"		h3	2'-9"	6'-11"	4'-1"	1'-3"	1'-10"		
12	⅝"	11'-0"	9	k1	1'-0"	3'-9"					
12	"	18'-0"		k2	6'-11"	5'-4"					
12	"	17'-6"		k3	1'-0"	7'-0"					
10	"	20'-0"		k4	6'-11"	8'-4"					
10	"	22'-0"		k5	6'-11"	5'-4"					
10	"	24'-0"		k6	6'-11"	10'-4"					
4	"	11'-0"	10	l1	4'-9"						
4	"	14'-0"		l2	4'-3"						
4	"	17'-6"		l3	8'-0"						
4	"	20'-0"		l4	9'-3"						
4	"	22'-0"		l5	10'-3"						
4	"	24'-0"		l6	11'-3						
4	"	11'-0"	11	m1	1'-0"	3'-9"					
4	"	14'-0"		m2	6'-11"	5'-4"					
4	"	17'-6"		m3	1'-0"	7'-0"					
6	"	20'-0"		m4	6'-11"	8'-4"					
6	"	22'-0"		m5	6'-11"	5'-4"					
6	"	24'-0"		m6	6'-11"	10'-4"					
22	"	22'-6"	12	n	3'-3						
22	"	19'-0"	13	p1	3'-7"	3'-5"	180°	3'-7"			
8	⅞"	28'-6"		p2	7'-2"	5'-3"	180°	7'-1"			
22	"	26'-0"		p3	4'-3"	5'-3"	180°	4'-9"			
22	"	20'-0"		p4	3'-11"	5'-9"	120°	3'-11"			
6	"	34'-6"		p5	9'-0"	5'-3"	180°	9'-0"			
7	1"	36'-0"	14	r1	3'-9"	6'-9"	3'-0"	17'-6"			
7	"	33'-0"		r2	7'-9"	9'-0"	4'-0"	18'-3"			
11	⅜"	19'-0"		r3	10'-9"	2'-6"	1'-6"	5'-9"			
17	"	23'-0"		r4	12'-3"	4'-9"	3'-6"	6'-0"			
76	"	18'-6"		r5	6'-4"	1'-5"	1'-0"	4'-9"			
8	"	9'-0"		r6	2'-10"	1'-5"	1'-0"	4'-9"			
40	"	16'-6"	15	v1	4'-9"	1'-0"	1'-5"	8'-10"			
32	"	19'-6"		v2	7'-9"	1'-0"	1'-5"	8'-10"			
32	"	12'-0"	10	L7	3'-6"	4'-3"					
4	"	34'-0"	16	w1	16'-0"	9'-0"	5'-0"				
2	"	34'-0"	16	w2	10'-0"	13'-0"	6'-9"				
18	⅞"	21'6"	17	s1	11'-3"	2'-11½					
18	⅜"	28'-0"	18	y1							

Correct Alexander von Babo
Engineer of Bridge Design.

Approved Alex D Hammond
Engineer in charge of Bridges & Harbor.

Approved John Ericson
City Engineer.

Approved Jos. Gill
Commissioner of Public Works.

CITY OF CHICAGO
DEPARTMENT OF PUBLIC WORKS
BUREAU OF ENGINEERING
DIVISION OF BRIDGES AND HARBOR

IRVING PARK BOULEVARD BRIDGE
OVER THE NORTH BRANCH OF THE CHICAGO RIVER
SUBSTRUCTURE
River Piers

Scale: as shown. December, 1912.

Drawn by H.E.Y.
Traced by J.A.K.
Checked by J.P.

Drawing No. 166.
File № U-60-12.

8 OF 13

1660820020

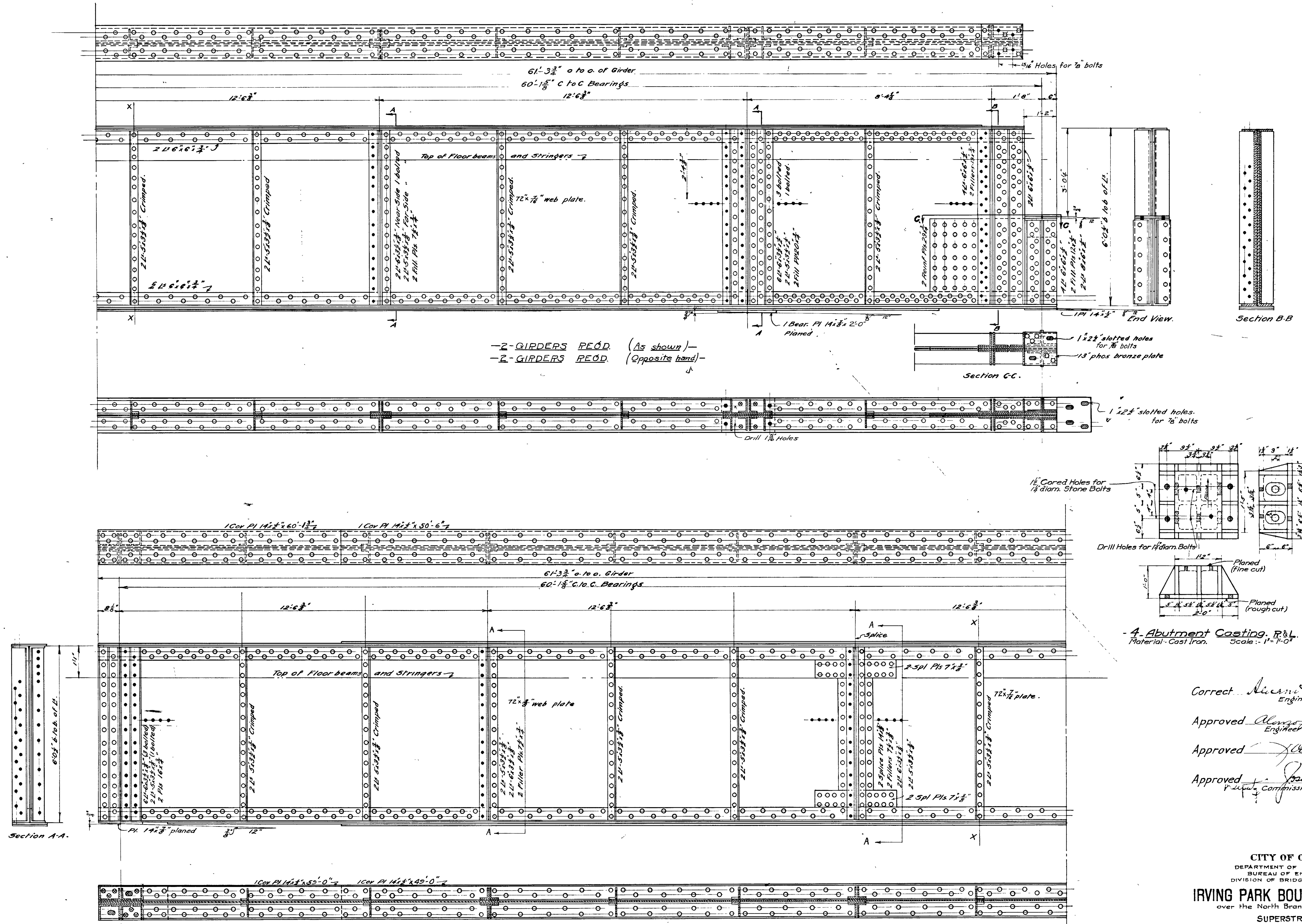

Rivets 7/8" diam unless otherwise noted.
Holes for 7/8" diam. rivets 15/16" diam.

Note:- For General Notes see Sheet # 10.

Correct *Alexander von Babo* Engineer of Bridge Design.

Approved *Alonzo J. Hammond* Engineer in charge of Bridges & Harbor.

Approved *[signature]* City Engineer.

Approved *[signature]* Commissioner of Public Works.

CITY OF CHICAGO
DEPARTMENT OF PUBLIC WORKS
BUREAU OF ENGINEERING
DIVISION OF BRIDGES AND HARBOR

IRVING PARK BOULEVARD BRIDGE

over the North Branch of Chicago River.

SUPERSTRUCTURE.

End-Span Girders

Scale: 3/4" to 1'. Dec. 1912.

DRAWN BY H.E.Y.
TRACED BY C.R.H.
CHECKED BY E.S.

DRAWING No.-167 9 OF 13
FILE No 11-6-9-13

1660820021

27"x41"

ls

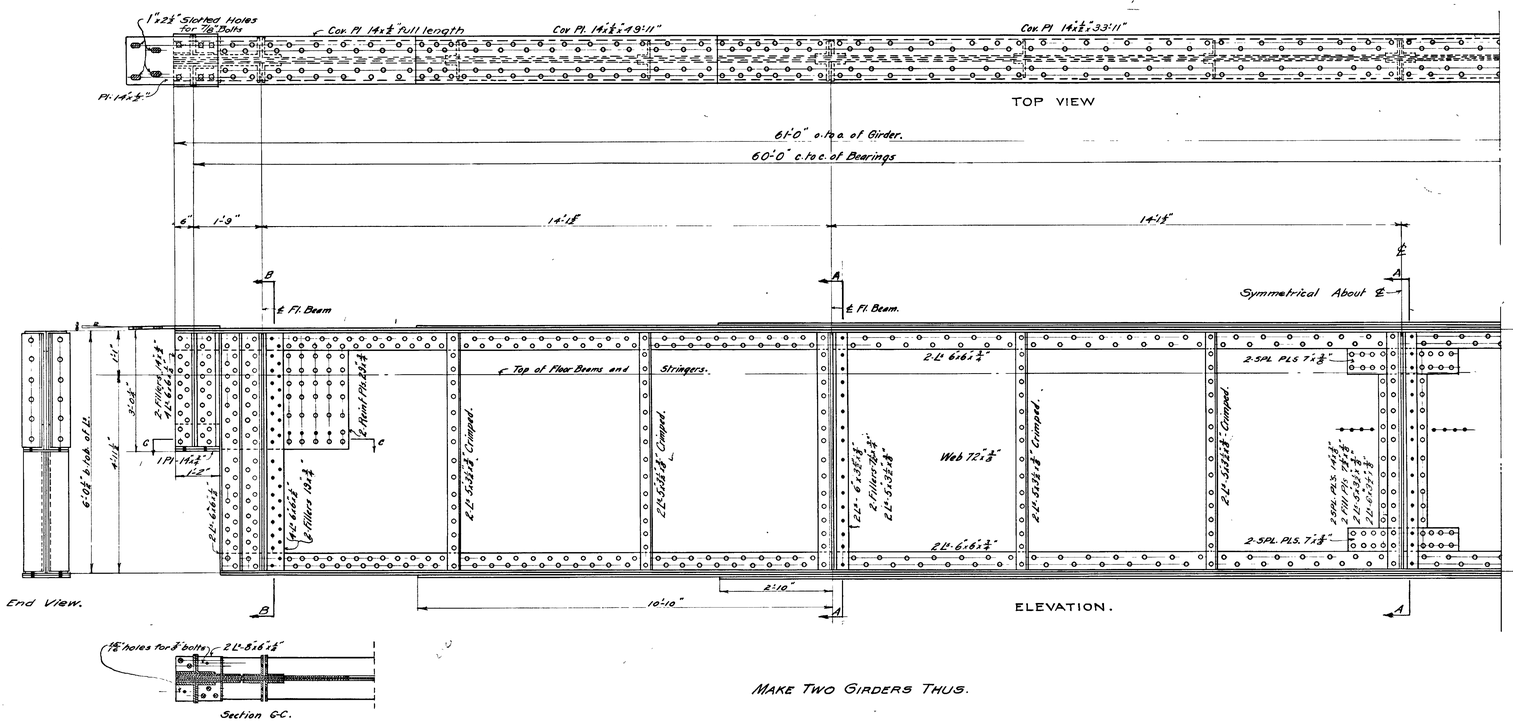

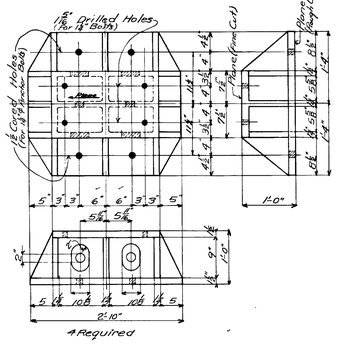

PIER CASTING

Material - Cast Iron Scale - 1" = 1'-0"

Section G-G.

MAKE TWO GIRDERS THUS.

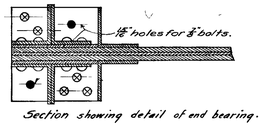

Section showing detail of end bearing.

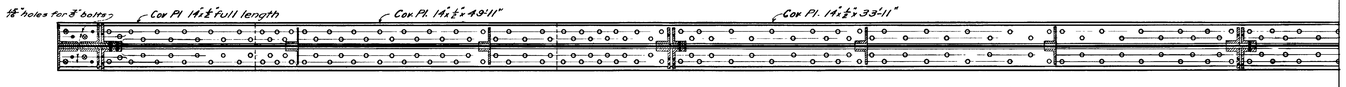

SECTION

GENERAL NOTES:

MATERIAL:

Structural Steel as per Specifications.
Rivet " " " .
Cast iron " " " .

RIVETS & RIVET HOLES:

Rivets ⅞" diam. unless otherwise noted.
Holes for ⅞" diam Rivets, 1⅛" diameter.
" " ¾" " " 1" " .

REAMING:

All holes for ⅞" Rivets in material over ⅝" thick to be punched 1" diam and reamed to 1⅛" diam. after assembling.
All holes for field connections of Floor-beams and Stringers to be punched 1" diam and reamed to 1⅛" diam. in the shop through iron templates.
Holes for ¾" Rivets in flanges of 15" I's. to be punched 1" and reamed to 1/16 diam.

PAINTING:

All Paint to consist of 26 lbs. of red lead to One Gallon of boiled linseed Oil.
All parts in contact to have one coat before assembling, all material to have one coat before shipment and surfaces inaccessible after erection to receive two coats.

Correct Alexander von Babo
Engineer of Bridge Design.

Approved Alonzo J. Hammond
Engineer in Charge of Bridges & Harbor.

Approved [illegible]
City Engineer.

Approved [illegible]
Deputy Commissioner of Public Works.

CITY OF CHICAGO
DEPARTMENT OF PUBLIC WORKS
BUREAU OF ENGINEERING
DIVISION OF BRIDGES AND HARBOR

IRVING PARK BOULEVARD BRIDGE

over the North Branch of Chicago River.

SUPERSTRUCTURE.

Center-Span Girders

Scale: ¾" to 1'. Dec 1912.

DRAWN BY H.E.Y.
TRACED BY [illegible]
CHECKED BY E.S.

DRAWING No-168

10 OF 13

1660820022

FILE No. 11-60-14

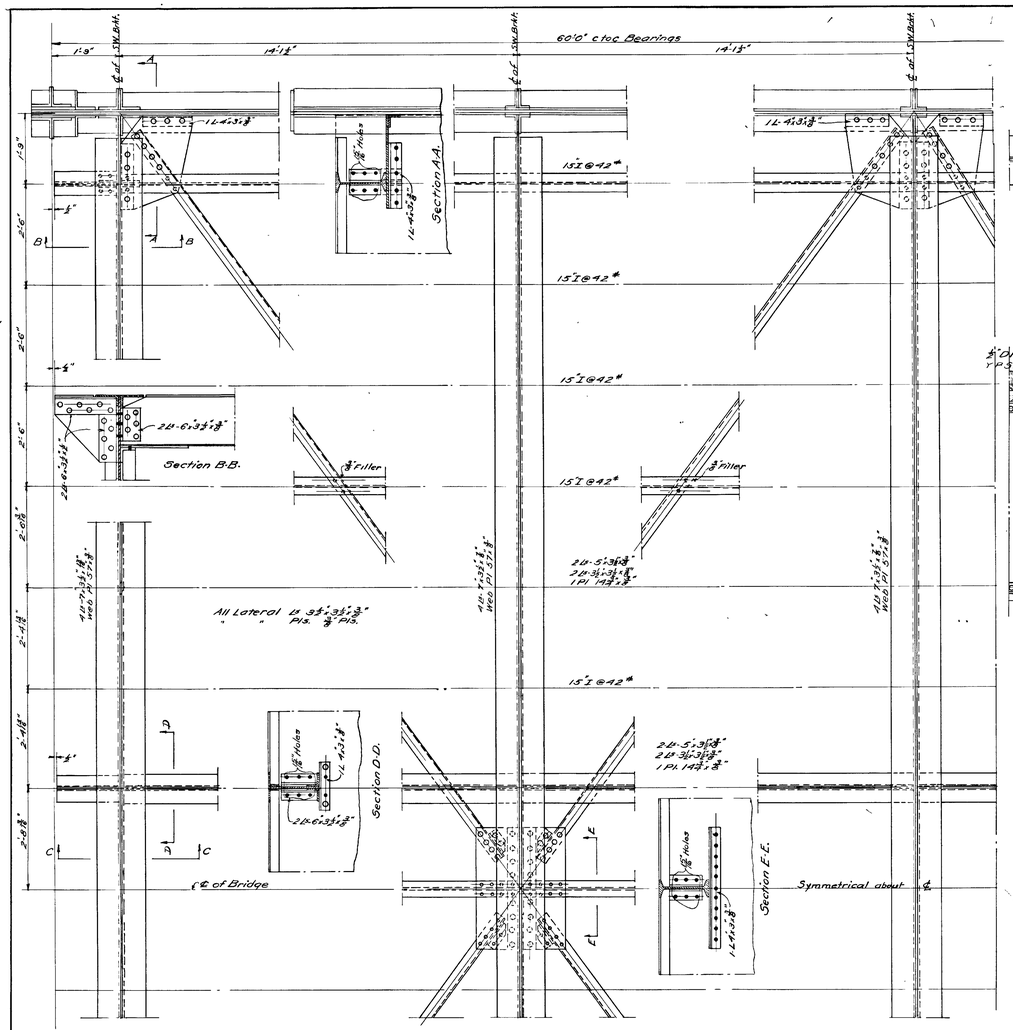

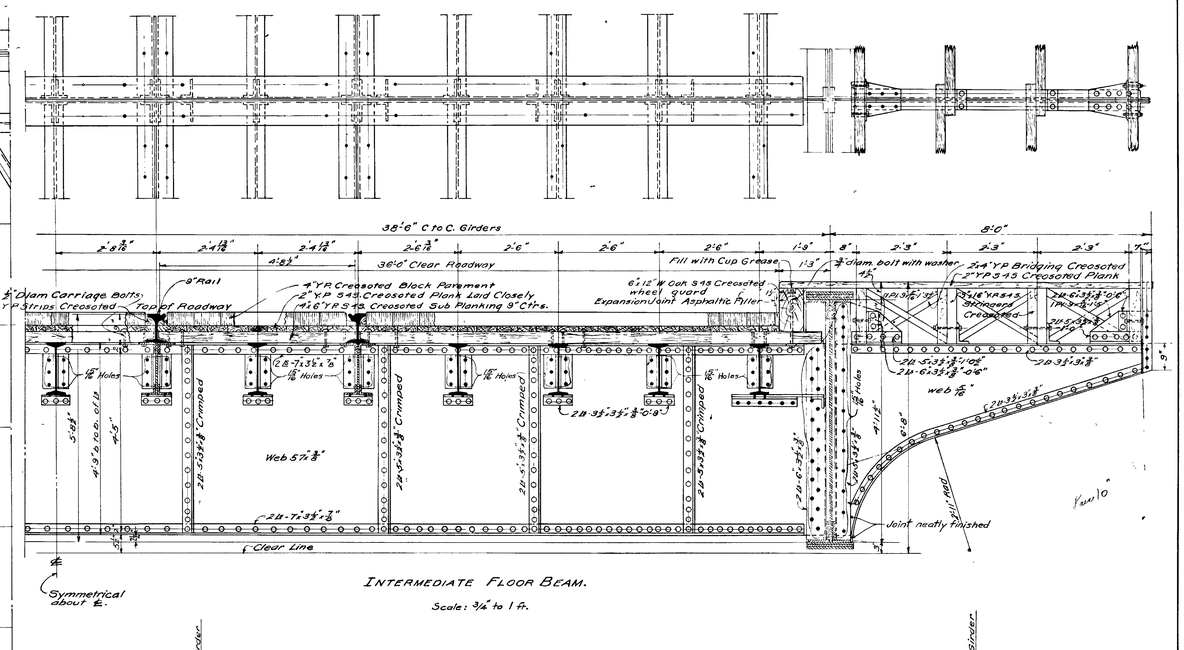

INTERMEDIATE FLOOR BEAM.

Scale: 3/4" to 1 ft.

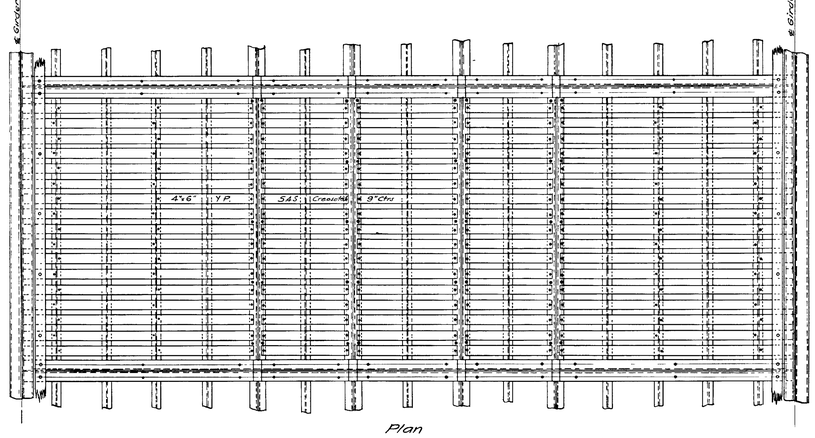

Plan

Showing method of laying & fastening Sub-Planking to Stringers.

Scale: 3/8" to 1 ft.

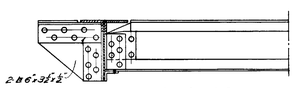

Section C-C.

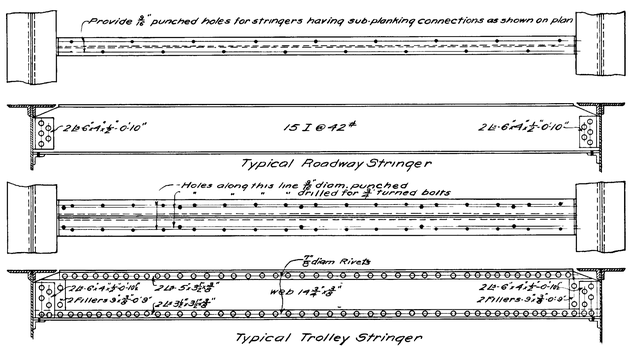

Typical Roadway Stringer

Typical Trolley Stringer

For Notes on Material etc. See Sheets 10 & 12.

RIVETS & RIVET HOLES

Rivets ⅞" diam unless otherwise noted

Open Holes for ⅞" diam Rivets 1⅛" diam.

" " " ¾" " 1" "

Rivets in webs and end connections off stringers ⅞" diam.

Correct Alexander von Babo
Engineer of Bridge Design.

Approved Alonzo J. Hammond
Engineer in charge of Bridges & Harbor.

Approved John Ericson
City Engineer.

Approved [illegible]
Commissioner of Public Works.

CITY OF CHICAGO
DEPARTMENT OF PUBLIC WORKS
BUREAU OF ENGINEERING
DIVISION OF BRIDGES AND HARBOR

IRVING PARK BOULEVARD BRIDGE

OVER THE NORTH BRANCH OF THE CHICAGO RIVER

SUPERSTRUCTURE

Center Span Floor System

Scale. as shown. December, 1912.

Drawn by H.K.V.
Traced by D.W.K.
Checked by E.S.

Drawing No. 169
File № 11-62-15

11 OF 13

1660820023

17

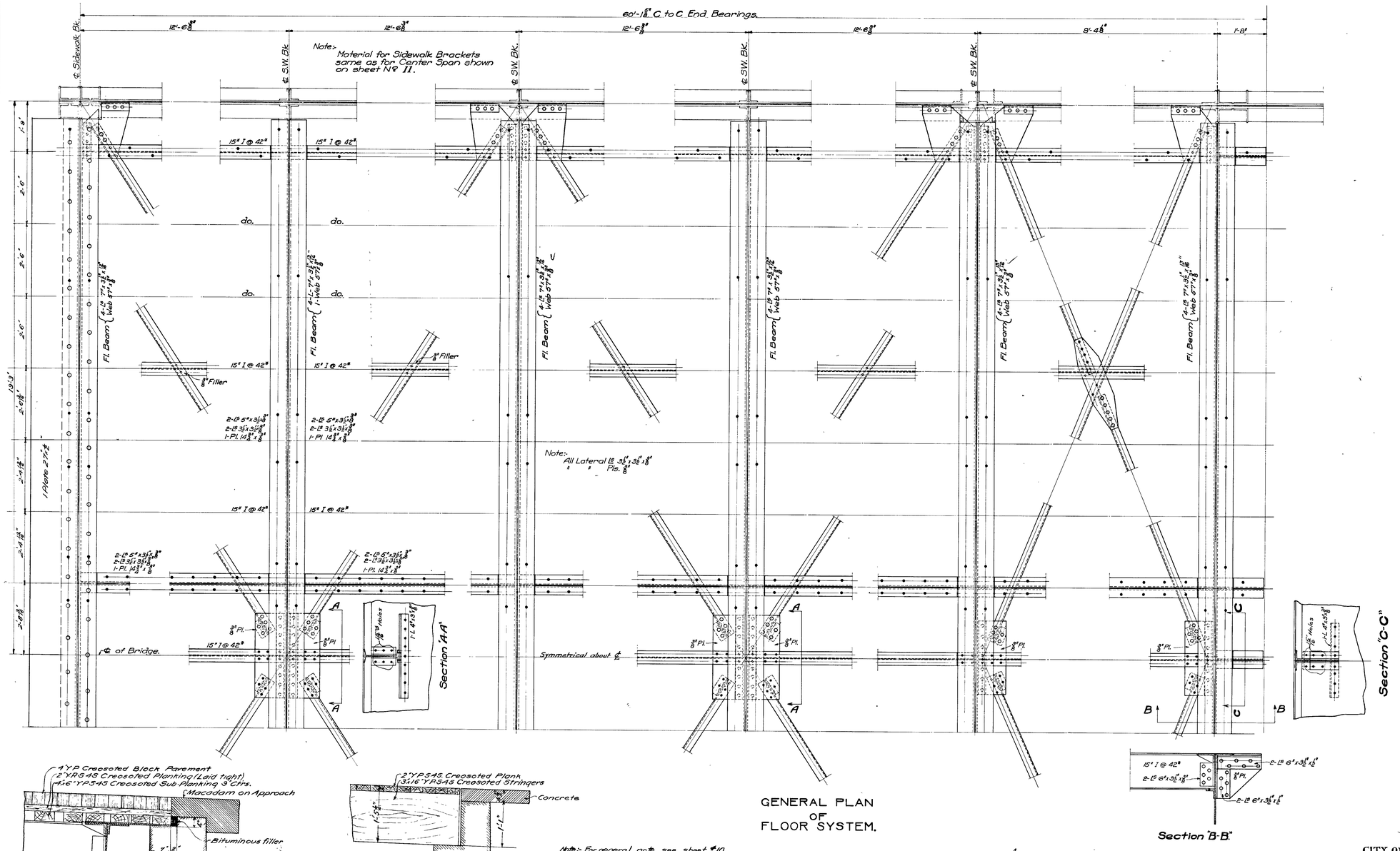

GENERAL PLAN OF FLOOR SYSTEM.

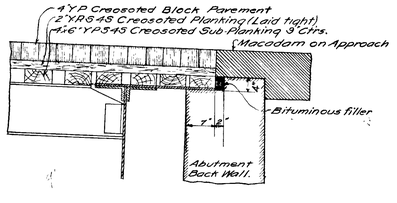

SECTION THROUGH ROADWAY AT ABUTMENT.

Scale 1"=1'-0"

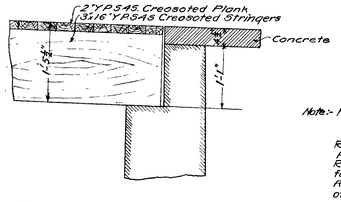

SECTION THROUGH SIDEWALK AT ABUTMENT.

Scale 1"=1'-0"

Note:- For general note see sheet #10

Rivets 3/4" diam unless otherwise noted
Holes for 3/4" diam rivets 13/16" diam.
Rivets in Top Flanges of Stringers and Floor Beams for Sub-planking punched 3/4" diam.
Rivets in webs and end connections of stringers and str. brackets 7/8" diam.

Correct Alexander von Babo
Engineer of Bridge Design.

Approved Alonzo J. Hammond
Engineer in charge of Bridges & Harbor.

Approved [signature]
City Engineer.

Approved [signature]
Commissioner of Public Works.

CITY OF CHICAGO
DEPARTMENT OF PUBLIC WORKS
BUREAU OF ENGINEERING
DIVISION OF BRIDGES AND HARBOR

IRVING PARK BOULEVARD BRIDGE

over the North Branch of Chicago River.

SUPERSTRUCTURE.

End-Span Floor System.

Scale: 3/4" to 1'. Dec 1912.

DRAWN BY H.E.V.
TRACED BY R.J.P.
CHECKED BY E.S.

DRAWING No-170

12 OF 13

1660820024

FILE No. 11-60-16

27" x 41"

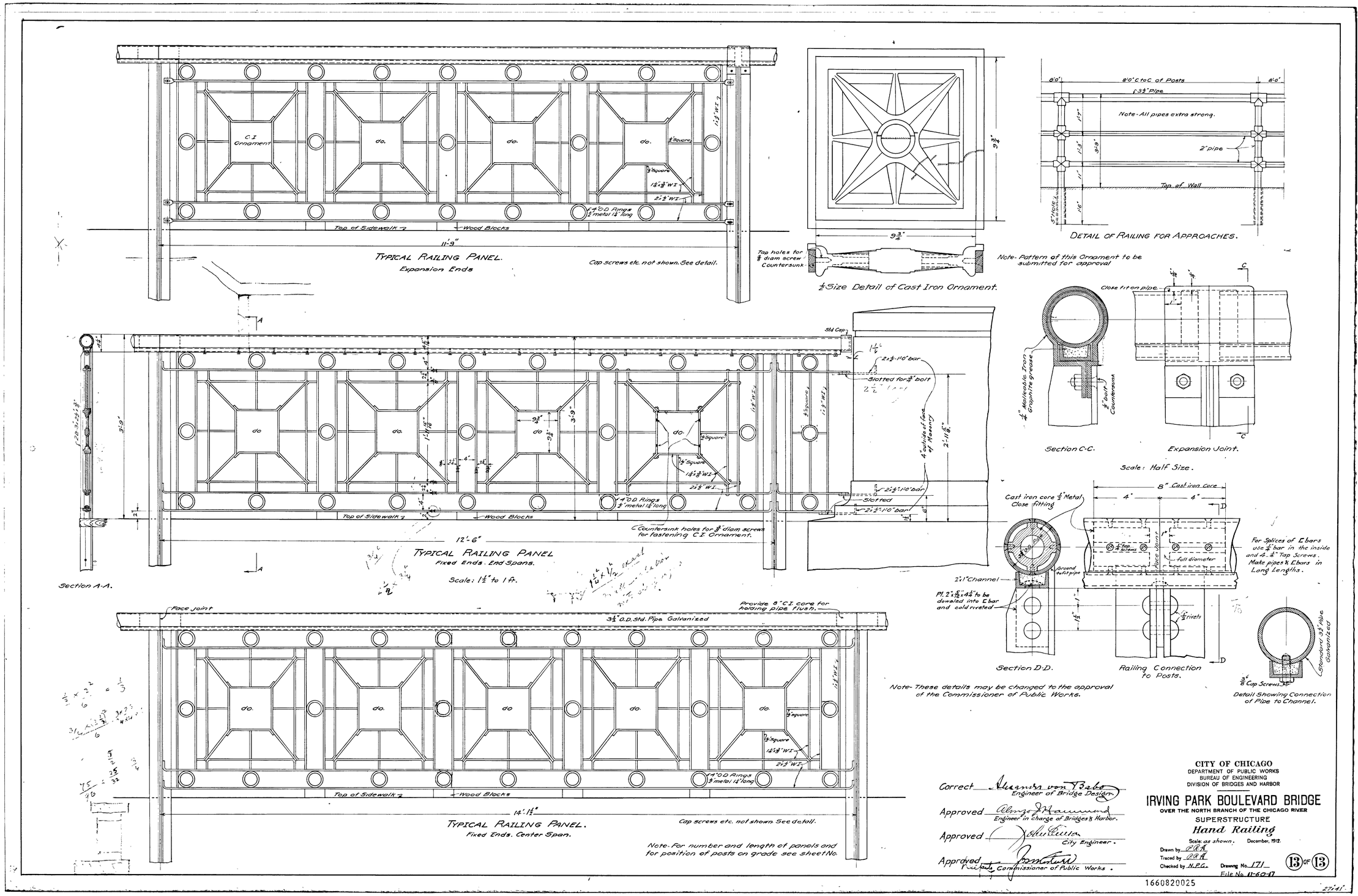

TYPICAL RAILING PANEL.
Expansion Ends

Cap screws etc. not shown. See detail.

½ Size Detail of Cast Iron Ornament.

Note- Pattern of this Ornament to be submitted for approval

DETAIL OF RAILING FOR APPROACHES.

Section C-C.

Expansion Joint.

Scale: Half Size.

TYPICAL RAILING PANEL
Fixed Ends. End Spans.

Scale: 1½" to 1 ft.

Section A-A.

Section D-D.

Railing Connection to Posts.

For Splices of C bars use ¼" bar in the inside and 4-¼" Tap Screws. Make pipes & C bars in Long Lengths.

Detail Showing Connection of Pipe to Channel.

Note- These details may be changed to the approval of the Commissioner of Public Works.

TYPICAL RAILING PANEL.
Fixed Ends. Center Span.

Cap screws etc. not shown. See detail.

Note- For number and length of panels and for position of posts on grade see sheet No.

Correct Alexander von Babo
Engineer of Bridge Design.

Approved Alonzo J. Hammond
Engineer in charge of Bridges & Harbor.

Approved John Ericson
City Engineer.

Approved [signature]
Commissioner of Public Works.

CITY OF CHICAGO
DEPARTMENT OF PUBLIC WORKS
BUREAU OF ENGINEERING
DIVISION OF BRIDGES AND HARBOR

IRVING PARK BOULEVARD BRIDGE
OVER THE NORTH BRANCH OF THE CHICAGO RIVER
SUPERSTRUCTURE
Hand Railing

Scale: as shown. December, 1912.
Drawn by P.R.A.
Traced by P.R.A.
Checked by N.P.G.
Drawing No. 171
File No. 11-60-17

13 OF 13

1660820025

27'x41'

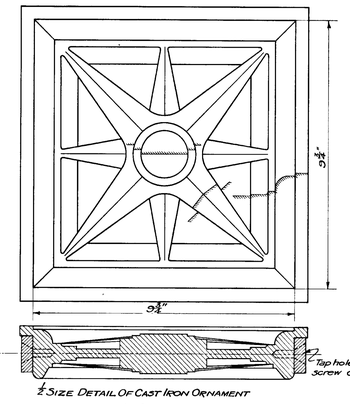

½ Size Detail Of Cast Iron Ornament

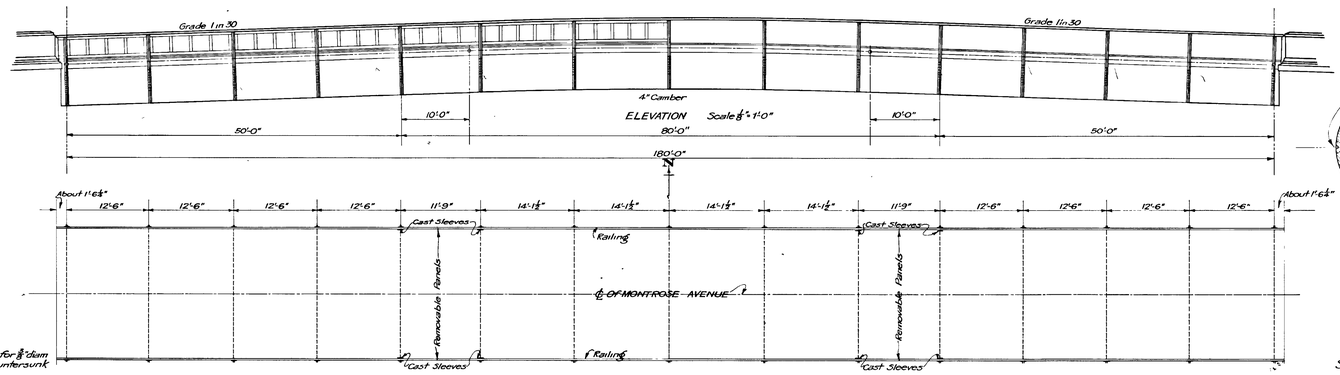

PLAN
Scale ⅛"=1 Foot

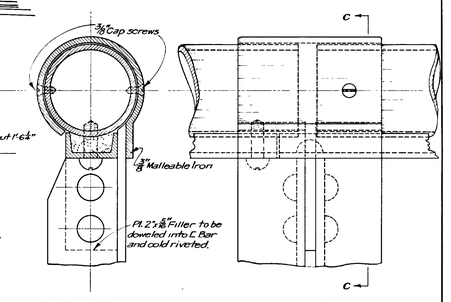

Section CC

Sleeve Joint

Scale ½ Size.

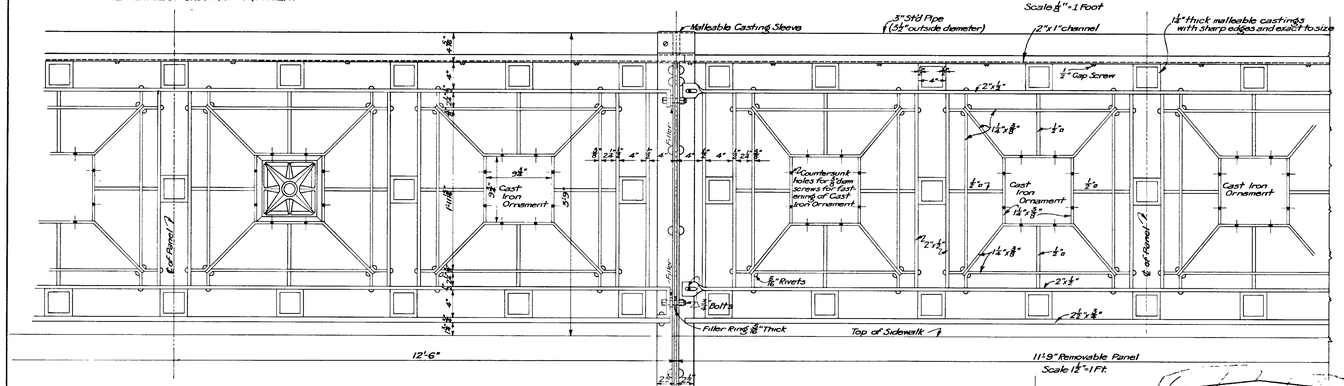

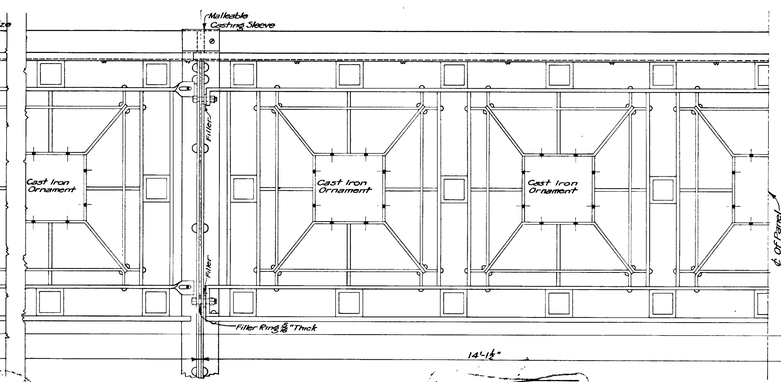

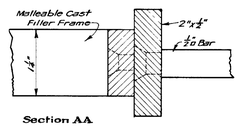

Section AA

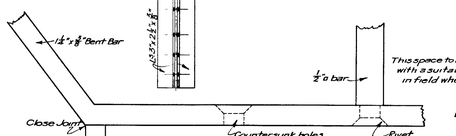

Detail Showing Connection of Pipe to Channel
Scale ½ Size

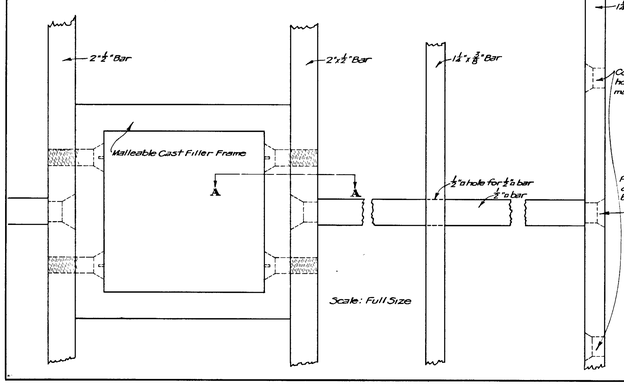

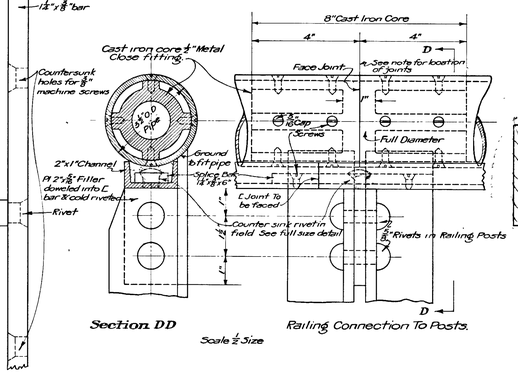

Section DD

Railing Connection To Posts.
Scale ½ Size

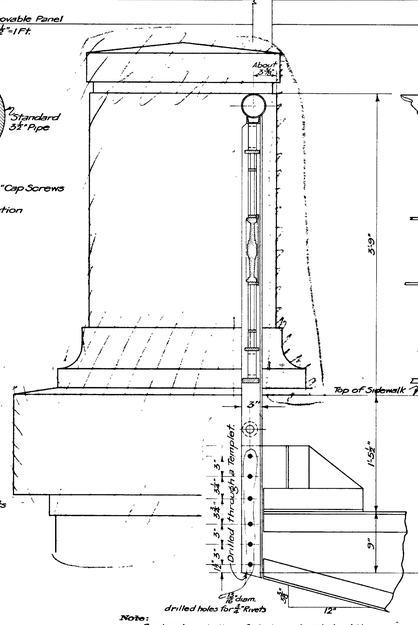

Scale 1½"=1'-0"

Note: Contractor shall verify holes in brackets at the Bridge site and make a templet of same

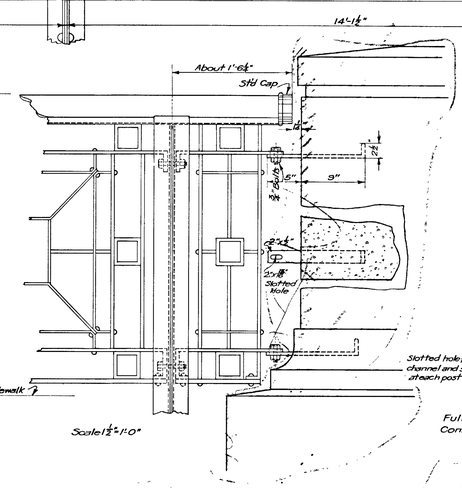

Full Size Detail Of Splice Bars Connection With Rivet To Structural Posts

NOTE:- Contractor shall verify all dimensions at the bridge before shop drawings are made.
The faced joints of pipes, excepting the sleeve joints at each end of the movable panels, shall be located at approved and convenient points, suitable to long lengths of pipes.
The pipes shall be shipped loose, properly marked and match marked; The pipe sections in center shall be bent to conform to the camber as noted.
The channels shall be joined at every post and spliced with a 14"x⅜" bar 6" long, cold riveted in field to posts and fastened with 2-⅞" countersunk cap screws as shown.
Shop paint as per specifications

CITY OF CHICAGO
DEPARTMENT OF PUBLIC WORKS
BUREAU OF ENGINEERING
DIVISION OF BRIDGES AND HARBOR

MONTROSE AVENUE BRIDGE
OVER
NORTH BRANCH OF CHICAGO RIVER
SUPERSTRUCTURE
RAILING

CORRECT Engineer Of Bridge Design
APPROVED Engineer Of Bridges & Harbor
APPROVED City Engineer
APPROVED Commissioner Of Public Works

Drawn By J.A. June 14-1915
Traced By
Checked By J.A. Scale as shown
Drawing No. 1680
File No. 11-60-18
Size 27"x41"

1660820026

R1	R2	Point	Position of Loads for Max. Moments. Street Car.
21,000	12,900	1	
16,300	14,100	2	
14,500	16,400	3	

LOADING: L.L. One fully loaded street car on one track and gravity sprinkler on other track plus 100# per sq. ft. on space not occupied by above loading.

R1.	R2	Point	Position of Loads for Max. Moments. Sprinkler.
47,000	26,300	1	
37,500	30,600	2	
32,000	40,000	3	

Position of Loads Giving Max. Shears 50'-0" Span. Street Car.

R1: 20,000
R2: 10,800

R1:
R2:

R1: 9,000
R2: 17,000

Position of Loads Giving Max. Shears at ①-②&③-50'-0" Span. Sprinkler.

R1: 47,400
R2: 20,600

R1: 36,000
R2: 28,200

R1: 21,000
R2: 39,000

Position of Loads Giving Max. Shears at ①-②&③-60'-0" Span. Sprinkler.

R2: 49,200
R3: 25,100

R2: 37,500
R3: 30,600

R2: 22,400
R3: 36,800

R1: 39,000#
R1: 43,200 - Lin. Load of 100# p. L.f. Case I.

R2 D.L.: 148,000.
R2: 43,200 - Uniform Load per sq. ft. (Case I)

Position of Loads Giving Max. Shears at ①-②&③-60'-0" Span. St. Car.

R2: 22,400
R3: 12,500

R2: 16,300
R3: 14,100

R2: 9,700
R3: 16,300

100# per sq. ft.

Position of Loads for Max. Shears on Cantilever.

Sprinkler

R2: 23,000
R3: 12,000

Street Car:

50'-0" 10'-0" 60'-0"

Position of Loads for Maximum Moments. Sprinkler, Case I.

R1: 29,400
R2: 36,200

R1: 36,000
R2: 27,900

R1: 12,000
R2: 17,100

R1: 15,500
R2: 12,500

Position of Loads for Max. Moments, Case II (Cantilever).

Sprinkler.	R2: 48,500 Conc. @ ①-41,000	R3: 29,500
Sprinkler.	R2: 45,600 Conc. @ ①-51,000 R1: -9100	R3: 32,400
Street Car.	R2: 19,200 Conc @ ①-32,400 R1: -4500	R3: 14,700
100# per sq. ft. uniform L.L. Case II	R2: 60,000 Conc. @ ①-60,000 R1: +3,200	R3: 60,000

Total Uplift: 23,800#
D.L.R. : +39,000
Min. R1 : +15,200#

REACTION R1.
D.L. - 60,000 - Floor & Metal
L.L. - 51,800 - Uniform Load at 100# per sq. ft.

REACTION R2.
D.L. - 60,000 - Floor & Metal.
L.L. - 51,000 Uniform Load of 100# per sq. ft.

Street Car 287,000#
Sprinkler 655,000#
100# Uniform L.L. 778,000#
D.L. Floor & Metal 890,000#

1" = 101-0"
1" = 30,000#

2,645,000# = Max.

SHORE SPAN.
Case I, Dead Load Shore Span plus Dead Load From 60'-0" Span With L.L. on Shore Span Betw. & Bent and end reaction R1.

Case II. Dead Load Shore Span Plus D.L. From 60'-0" Span With L.L. on Cantilever and 60'-0" Span.

100# Uniform L.L. Case I
Sprinkler Case II
Street Car Case II
D.L. Floor & Metal
Case I
Street Car
Min.
Min. C1 = 300,000# Uniform L.L. 100# per sq. ft. Case I
Min. Case II
Max. Case I

1" = 101-0"
1" = 30,000#

Max. 67,700
Min. 18,700
L.L. 49,000
Conc. Ft. Top & Bott. 20'-8"
Conc. Ft. 16'-6" Top & Bott.
Case I - Max. = 1,595,000#

Scale of Lengths 1" = 101-0"
" " Shear 1" = 20,000#

MOMENT DIAGRAM FOR SHORE SPAN.

REACTION R1.
Dead Load = 18,700# Floor & Metal.
Live Load = 49,000#
Max. = 67,700#
Min. = 18,700#

REACTION R2.
Dead Load = 18,700#
Live Load = 45,000#

L.L. = 1420# P.L. FT.

D.L. Floor & Metal = 850# P.L. FT.

D.L. Moms.
176,000# Min. D.L.
L.L. Moms.
563,000# L.L.
739,000# Max.

Scale of Lengths 1" = 10'-0"
" " Moments 1" = 200,000#

FLOOR BEAM - F1 - 60'-0" SPAN.
Max. & Min. Moments & Reactions.

FLOOR BEAM - F1 - 60'-0" SPAN
Max. and Min. Shears.

SHEAR DIAGRAM FOR 60'-0" & SHORE SPAN.

IRVING PARK BLVD. BRIDGE.
OVER THE NORTH BRANCH OF THE CHICAGO RIVER
SUPERSTRUCTURE.
Diagram of Moments and Shears for Girders, Floor beams & Stringers.
Chicago Ill April 1912.
DRAWING Nº 432.
FILE Nº 11-60-19

1660820027

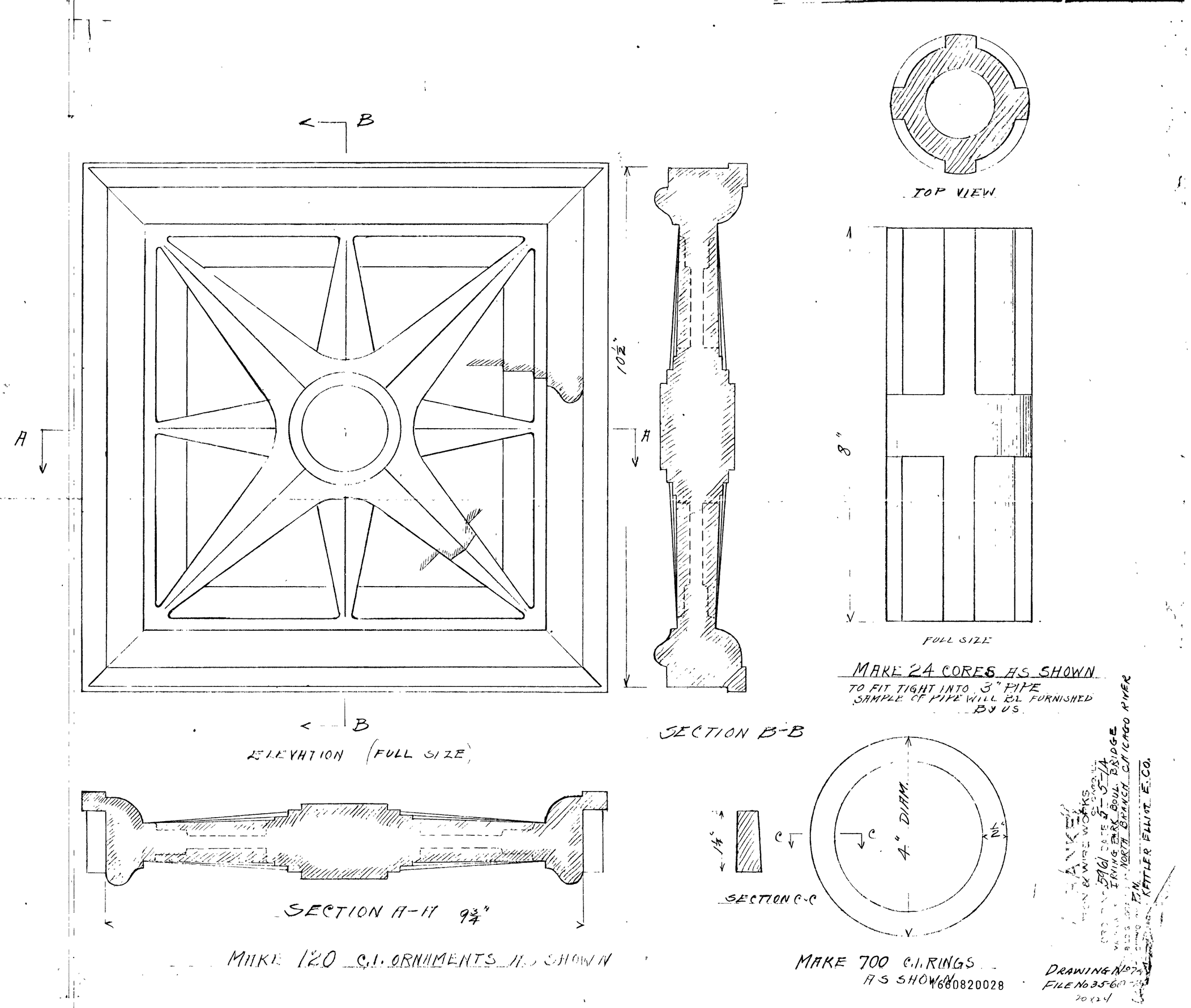
B
A
A
B
10½"
TOP VIEW
8"
FULL SIZE
MAKE 24 CORES AS SHOWN
TO FIT TIGHT INTO 3" PIPE
SAMPLE OF PIPE WILL BE FURNISHED BY US
ELEVATION (FULL SIZE)
SECTION B-B
SECTION A-A 9¾"
MAKE 120 C.I. ORNAMENTS AS SHOWN
1¼"
C
C
4" DIAM.
½"
SECTION C-C
MAKE 700 C.I. RINGS AS SHOWN
1660820028
5961 DATE 5-5-14
IRVING PARK BOUL. BRIDGE
NORTH BRANCH CHICAGO RIVER
P.M.
KETTLER ELLIOT E.CO.
DRAWING No 74
FILE No 35-60
20x24

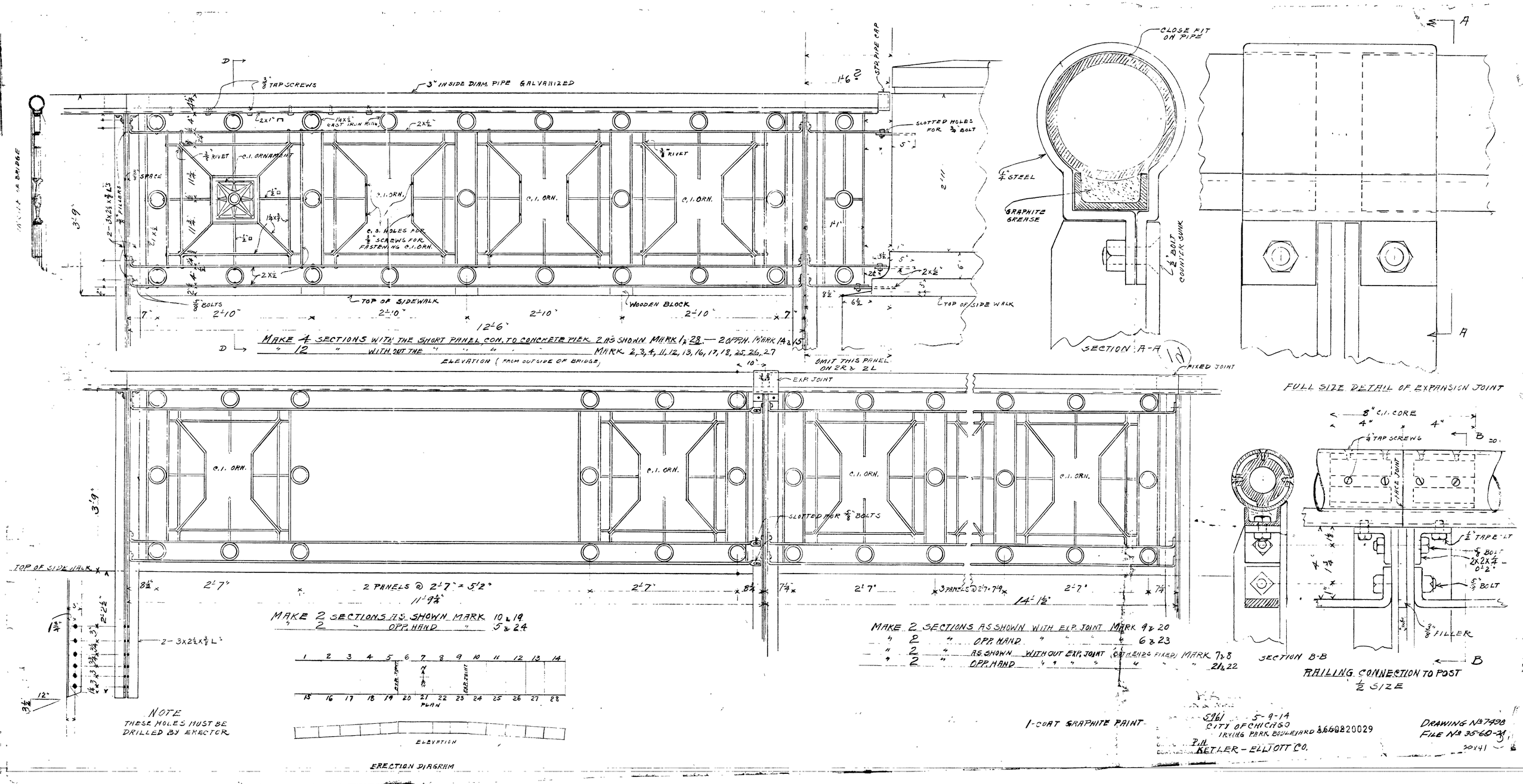

3/8" TAP SCREWS
3" INSIDE DIAM. PIPE GALVANIZED
STD. PIPE CAP
SLOTTED HOLES FOR 3/4" BOLT
3/8" RIVET
C.I. ORNAMENT
C.I. ORN.
C.S. HOLES FOR 3/8" SCREWS FOR FASTENING C.I. ORN.
TOP OF SIDEWALK
WOODEN BLOCK
TOP OF SIDE WALK
5/8" BOLTS
12'-6"
MAKE 4 SECTIONS WITH THE SHORT PANEL CON. TO CONCRETE PIER 2 AS SHOWN MARK 1 & 28 — 2 OPPH. MARK 14 & 15
" 12 " WITHOUT THE " " " " MARK 2, 3, 4, 11, 12, 13, 16, 17, 18, 25, 26, 27
ELEVATION (FROM OUTSIDE OF BRIDGE)
OMIT THIS PANEL ON 2R & 2L
CLOSE FIT ON PIPE
1/4" STEEL
GRAPHITE GREASE
1/2" BOLT COUNTER SUNK
SECTION A-A
FULL SIZE DETAIL OF EXPANSION JOINT
EXP. JOINT
FIXED JOINT
SLOTTED FOR 5/8" BOLTS
2 PANELS @ 2'-7" = 5'-2"
11'-9 1/4"
14'-1 1/2"
MAKE 2 SECTIONS AS SHOWN MARK 10 & 19
" 2 " OPP. HAND " 5 & 24
MAKE 2 SECTIONS AS SHOWN WITH EXP. JOINT MARK 9 & 20
" 2 " OPP. HAND " " " 6 & 23
" 2 " AS SHOWN WITHOUT EXP. JOINT (BOTH ENDS FIXED) MARK 7 & 8
" 2 " OPP. HAND " " " " " " 21 & 22
2-3x2 1/2x3/8 L's
NOTE
THESE HOLES MUST BE DRILLED BY ERECTOR
PLAN
ELEVATION
ERECTION DIAGRAM
1-COAT GRAPHITE PAINT
8" C.I. CORE
1/4" TAP SCREWS
FACE JOINT
1/2" TAP BOLT
5/8" BOLT
3/8" FILLER
SECTION B-B
RAILING CONNECTION TO POST
1/2 SIZE
5961 5-9-14
CITY OF CHICAGO
IRVING PARK BOULEVARD 1660820029
P.H.
KETLER - ELLIOTT CO.
DRAWING No 7498
FILE No 35-60-21

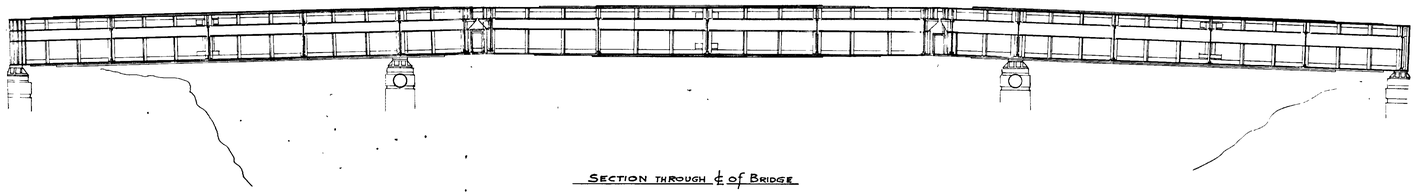

SECTION THROUGH ℄ OF BRIDGE

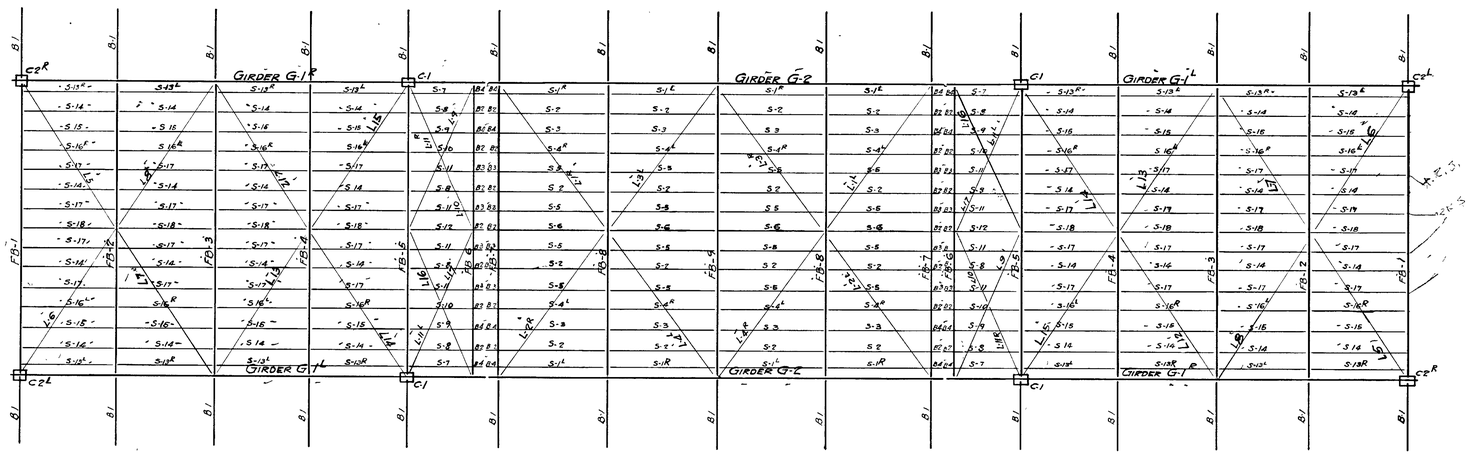

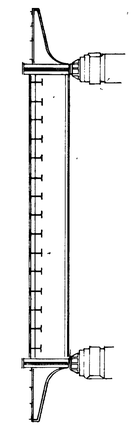

CROSS SECTION

APPROVED _____ Engineer of Bridge Design

APPROVED _____ Engineer in Charge of Bridges

APPROVED _____ City Engineer

APPROVED _____ Commissioner of Public Works

J.A. 9-18-13

ERECTION DIAGRAM

IRVING PARK BOULEVARD BRIDGE

OVER THE NORTH BRANCH OF THE CHICAGO RIVER

Chicago Steel Products Company
Steel Contractors
Chicago, Ills

DRAWING Nº 7499
FILE Nº 15-60-22

E1

1660820030

Sign 24"x36"

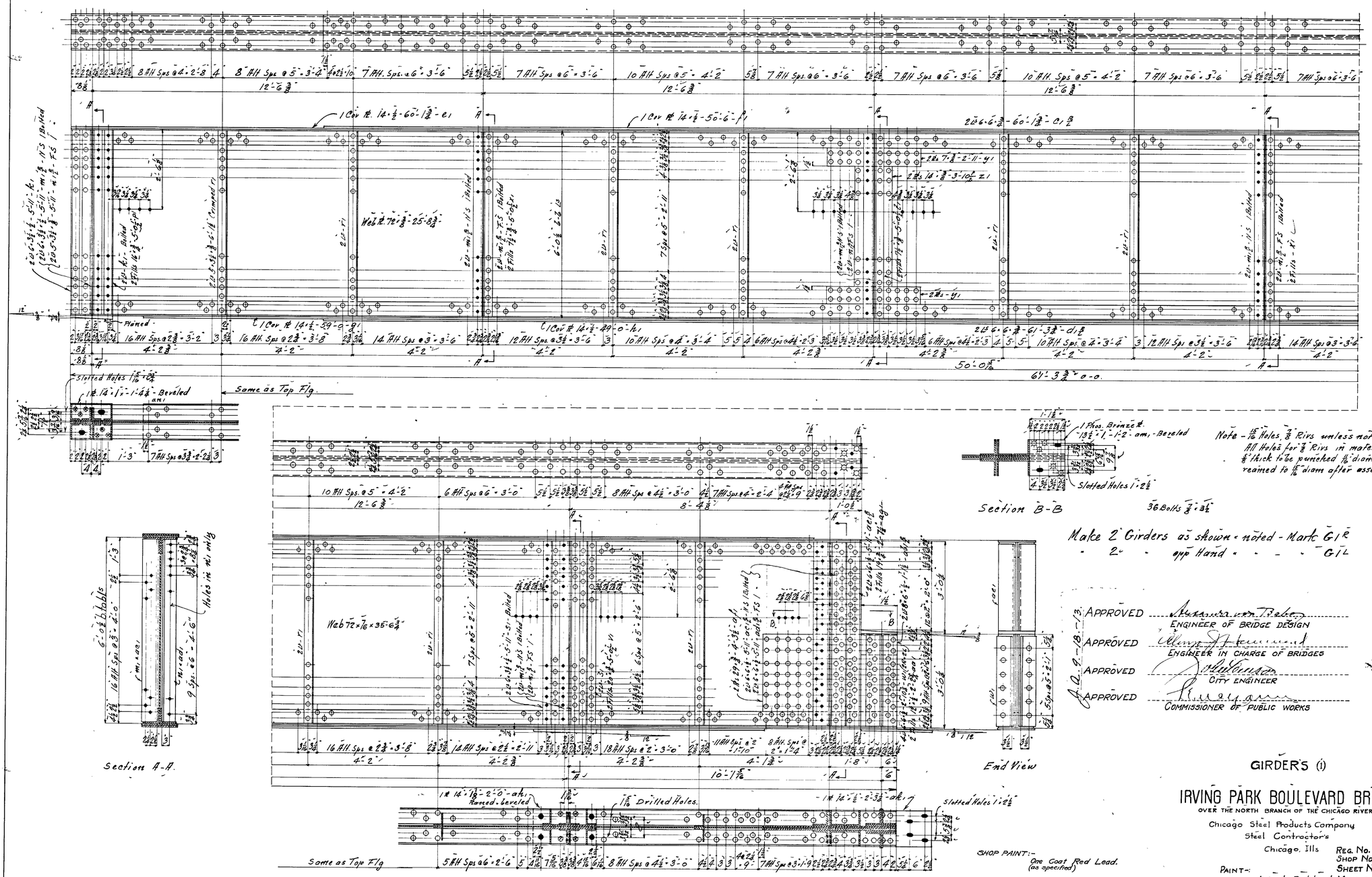

Note - 15/16 Holes, 7/8 Rivs unless noted
All Holes for 7/8 Rivs in material over 5/8 thick to be punched 11/16 diam and reamed to 15/16 diam after assembling.

36 Bolts 7/8 × 3 1/2

Make 2 Girders as shown & noted - Mark G1R
" 2 " opp Hand " " " G1L

J.A. 9-18-13

APPROVED [signature]
ENGINEER OF BRIDGE DESIGN

APPROVED [signature]
ENGINEER IN CHARGE OF BRIDGES

APPROVED [signature]
CITY ENGINEER

APPROVED [signature]
COMMISSIONER OF PUBLIC WORKS

SHOP PAINT:-
One Coat Red Lead.
(as specified)

GIRDER'S (1)

IRVING PARK BOULEVARD BRIDGE

OVER THE NORTH BRANCH OF THE CHICAGO RIVER

Chicago Steel Products Company
Steel Contractor's
Chicago, Ills

REG. No. 404
SHOP No. 795
SHEET No. 1

PAINT:-
SHOP 1 Coat Red Lead
FIELD

MADE BY. T.P. 7-14-13
CHECKED BY. G-P31-13

DRAWING No 7500
FILE No 15-68-23

1660820031

Size 24"×35"

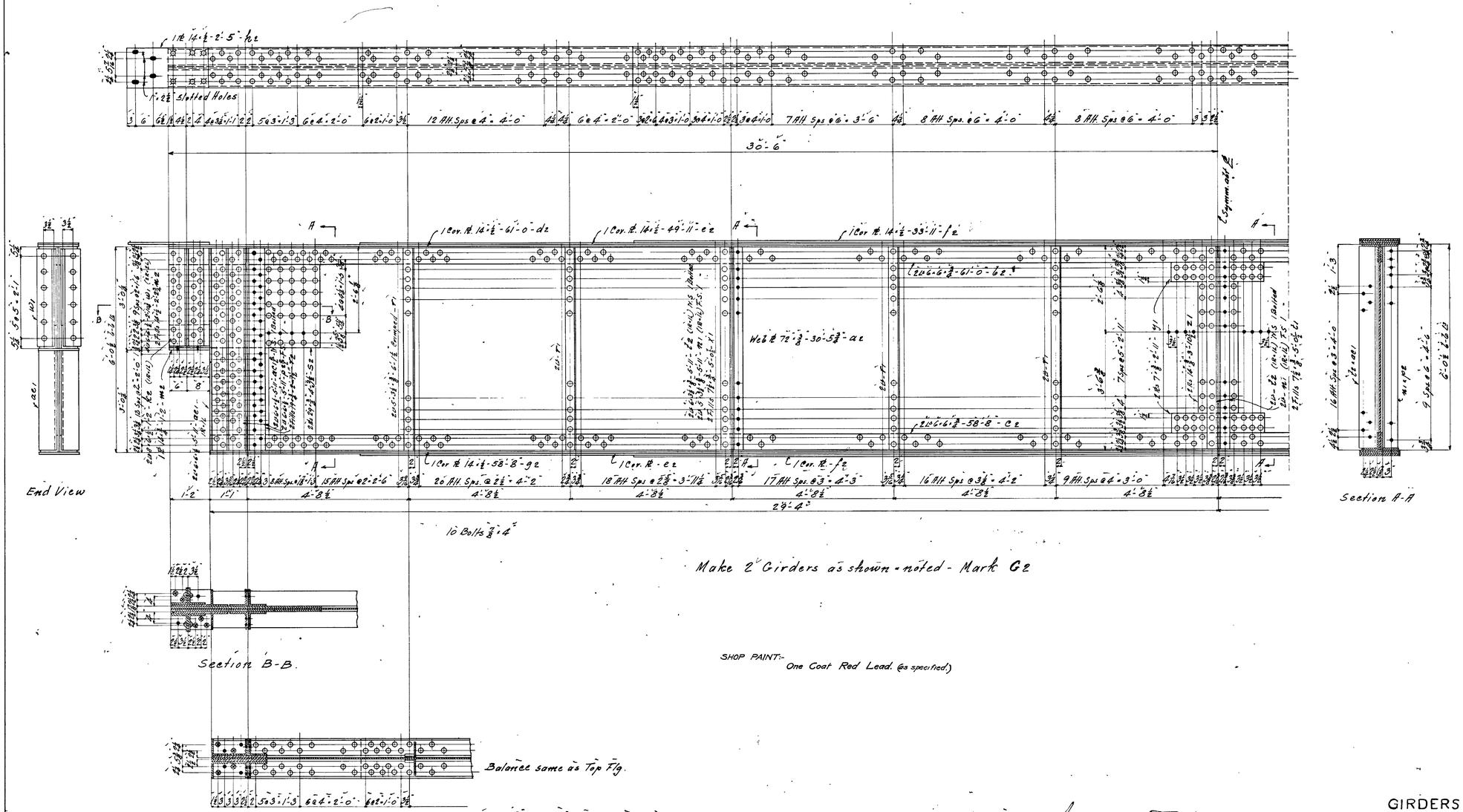

Note- 15/16" Holes, 7/8" Rivets unless noted
All Holes for 7/8" Rivs in material over 1/2" thick to be punched 11/16" diam and reamed to 15/16" diam after assembling

J.A. 9-18-13.

APPROVED _____ ENGINEER OF BRIDGE DESIGN

APPROVED _____ ENGINEER IN CHARGE OF BRIDGES

APPROVED _____ CITY ENGINEER

APPROVED _____ COMMISSIONER OF PUBLIC WORKS

GIRDERS (2)

IRVING PARK BOULEVARD BRIDGE

OVER THE NORTH BRANCH OF THE CHICAGO RIVER

Chicago Steel Products Company
Steel Contractor's
Chicago, Ills

PAINT:-
SHOP - 1 coat Red Lead

REG. No. 404
SHOP No. 795
SHEET No. 2
MADE BY T.P. 7-9-13
CHECKED BY G-7-31-1

DRAWING No 7501
FILE No 15-60-24

Size-24"x35"

1660820032

3

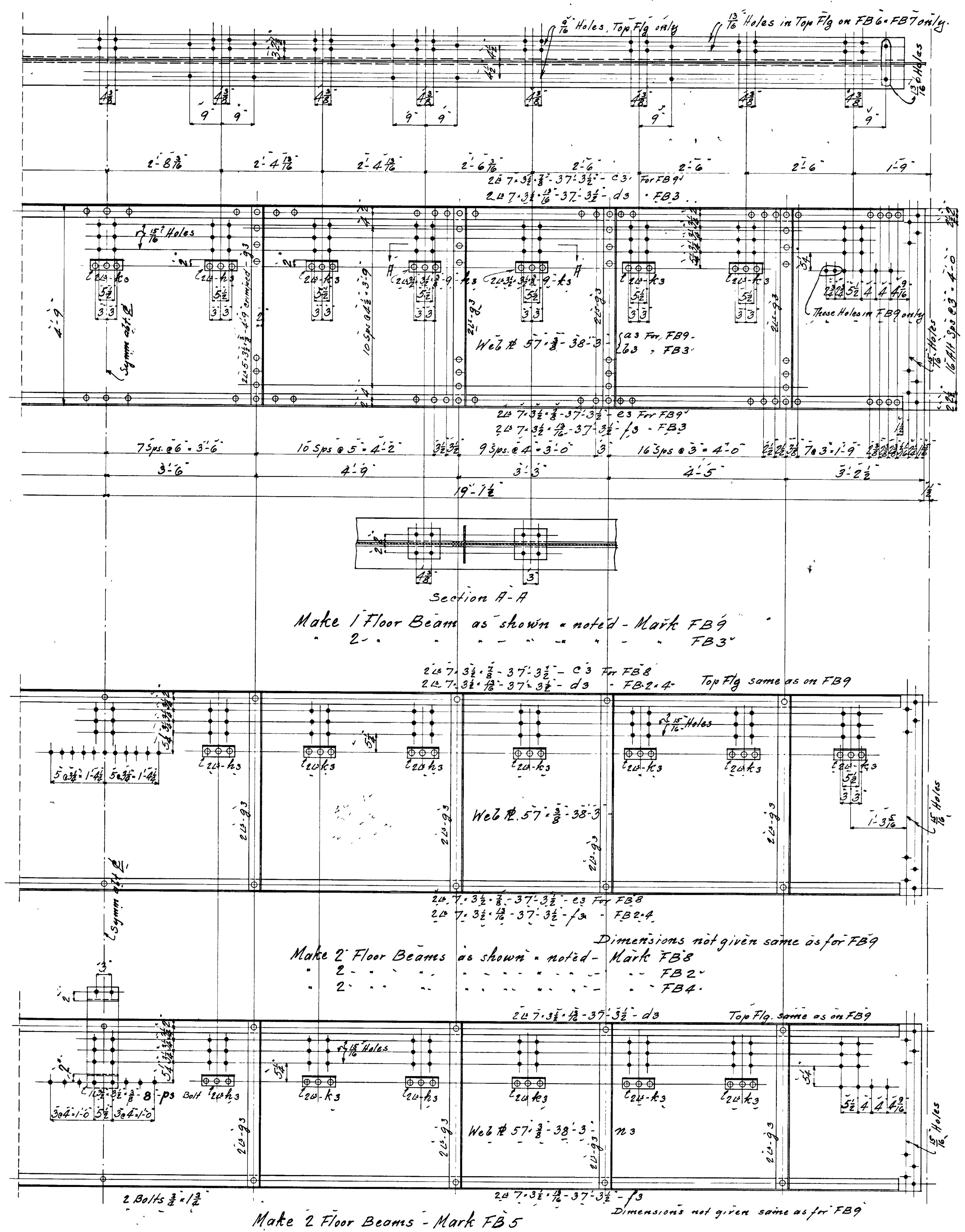

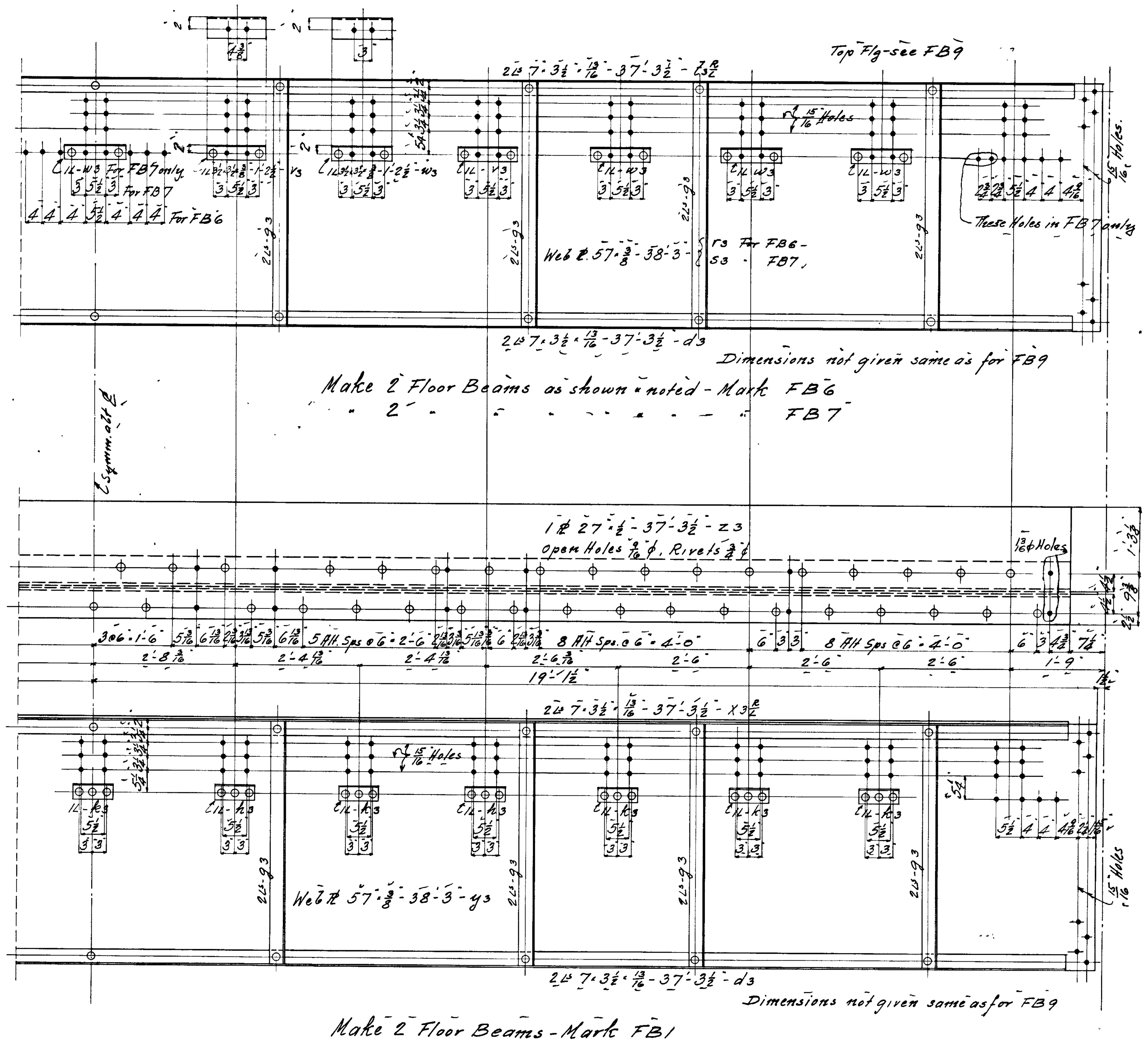

Note.- 13/16" Holes, ¾" Rivs. except as noted.

SHOP PAINT:-
One Coat Red Lead. (as specified.)

J.A. 9-18-13.

APPROVED Alexander von Babo
ENGINEER OF BRIDGE DESIGN

APPROVED Alonzo J. Hammond
ENGINEER IN CHARGE OF BRIDGES

APPROVED [signature]
CITY ENGINEER

APPROVED [signature]
COMMISSIONER OF PUBLIC WORKS

GIRDERS (3)

IRVING PARK BOULEVARD BRIDGE
OVER THE NORTH BRANCH OF THE CHICAGO RIVER

Chicago Steel Products Company
Steel Contractors
Chicago, Ills.

PAINT -
SHOP 1 coat Red Lead

REG. No. 404 -
SHOP No. 795
SHEET No. 3 -
MADE BY - T.P. 7-11-13
CHECKED BY G. 7-31-1

DRAWING Nº 7502
FILE Nº 15-60-25
Size 24"x35"

1660820033

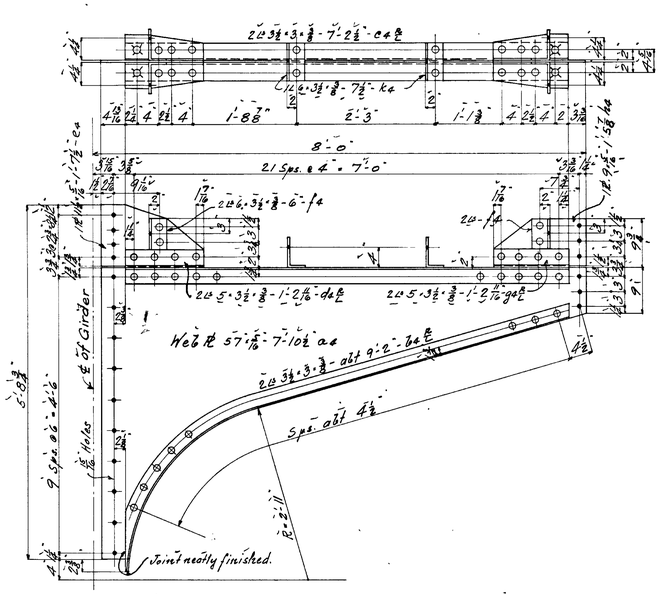

Make 30 Sidewalk Brackets - Mark B1

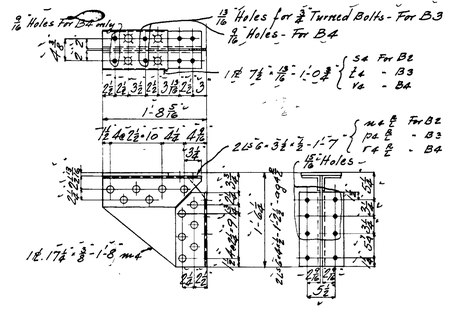

Make 28 Bracket Stringers as shown - noted - Mark B2
" 16 " " " " " " " B3
" 16 " " " " " " " B4

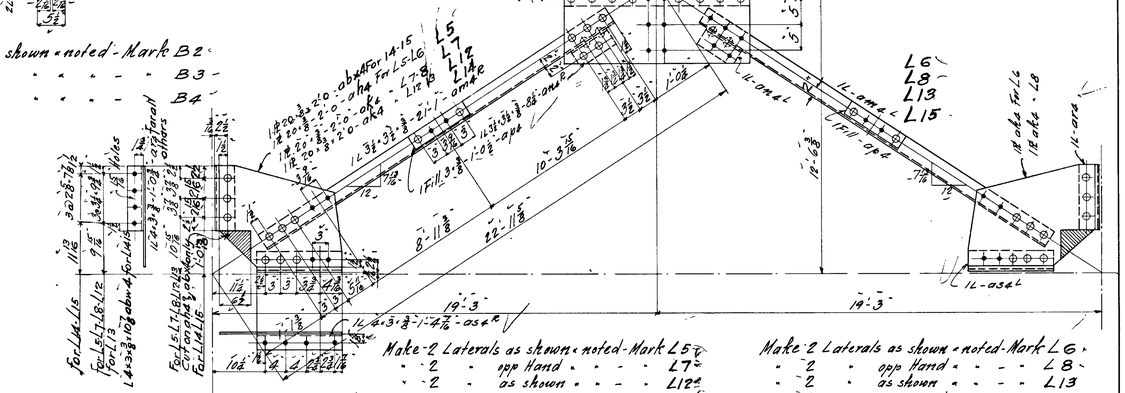

Make 2 Laterals as shown - noted - Mark L5
" 2 " opp Hand " " " L7
" 2 " as shown " " " L12
" 2 " opp. Hand " " " L14

Make 2 Laterals as shown - noted - Mark L6
" 2 " opp Hand " " " L8
" 2 " as shown " " " L13
" 2 " opp Hand " " " L15

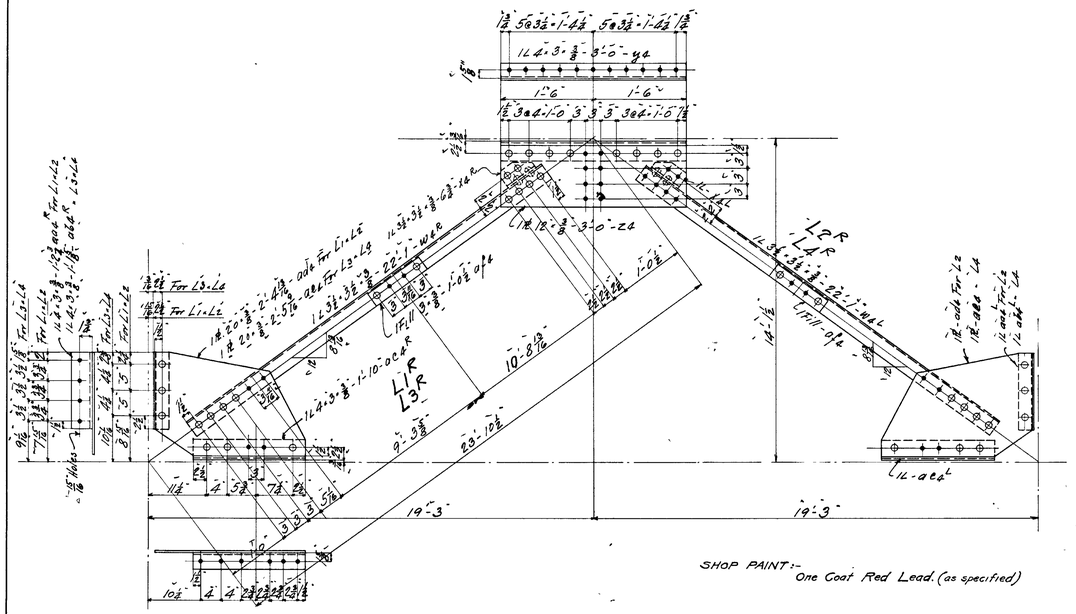

Make 1 Lateral - as shown - noted - Mark L1R
" 1 " opp. Hand " " " L1L
" 1 " as shown " " " L3R
" 1 " opp Hand " " " L3L

Make 1 Lateral - as shown - noted - Mark L2R
" 1 " opp Hand " " " L2L
" 1 " as shown " " " L4R
" 1 " opp Hand " " " L4L

SHOP PAINT:- One Coat Red Lead (as specified)

Note - 13/16" Holes, ¾" Rivs except as noted.

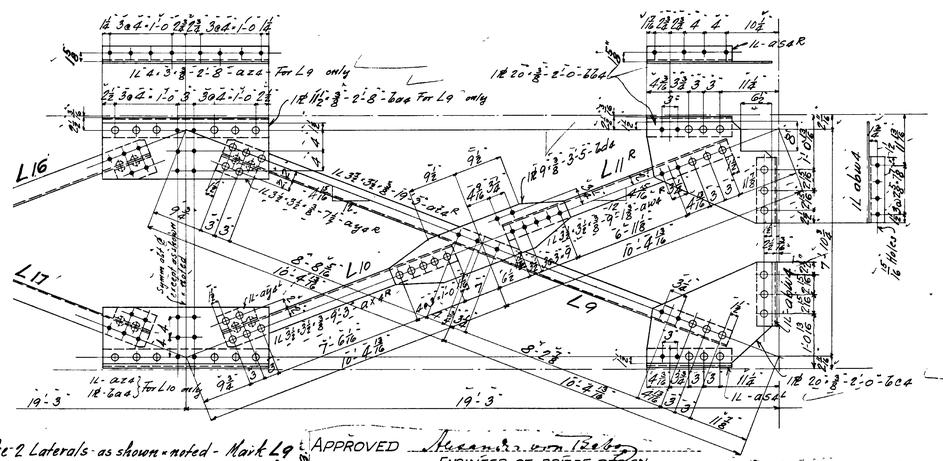

Make 2 Laterals as shown - noted - Mark L9
" 2 " opp Hand " " " L16
" 2 " as shown " " " L10
" 2 " opp. Hand " " " L17
" 2 " as shown " " " L11R
" 2 " opp Hand " " " L11L

APPROVED _____ ENGINEER OF BRIDGE DESIGN

APPROVED _____ ENGINEER IN CHARGE OF BRIDGES

APPROVED _____ CITY ENGINEER

APPROVED _____ COMMISSIONER OF PUBLIC WORKS

LATERALS & BRACKETS

IRVING PARK BOULEVARD BRIDGE

OVER THE NORTH BRANCH OF THE CHICAGO RIVER

Chicago Steel Products Company — Steel Contractors

Chicago, Ills.

PAINT- SHOP- 1 coat Red Lead

REG No. 404
SHOP No. 795
SHEET No. 4
MADE BY T.P. 7-14-13
CHECKED BY. G-7-31-13
DRAWING No 7503
FILE No 15-60-26

3-30-24,335

1660820034

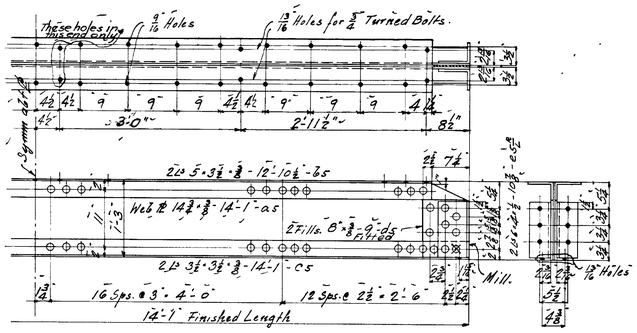

Make 16 Stringers - Mark S5

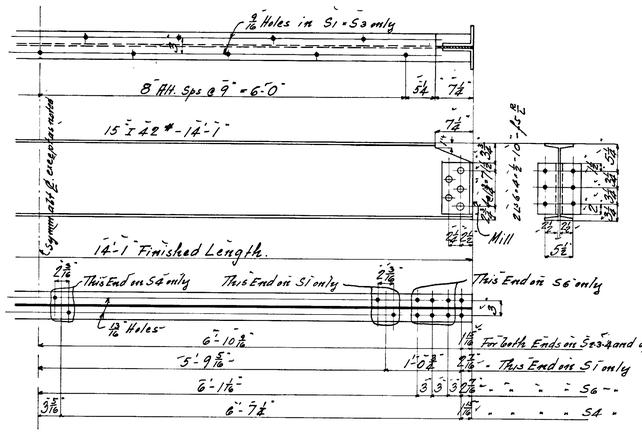

Make 4 Stringers as shown & noted - Mark S1R
" 4 " opp. Hand " " " S1L
" 16 " as shown " " " S2
" 8 " " " " " " S3
" 4 " " " " " " S4R
" 4 " opp. Hand " " " S4L
" 4 " as shown " " " S6

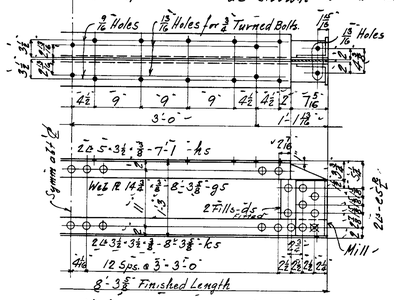

Make 8 Stringers - Mark S11

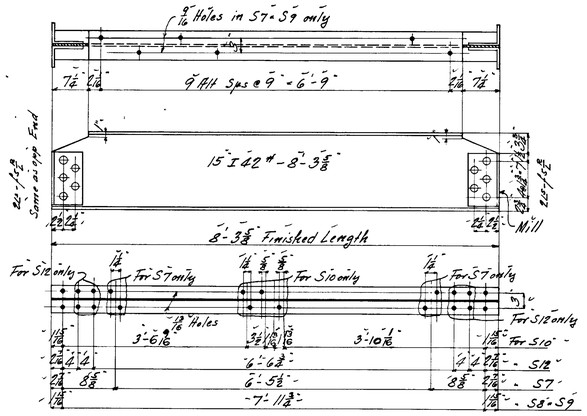

Make 4 Stringers as shown & noted - Mark S7
" 8 " " " " " " S8
" 4 " " " " " " S9
" 2 " " " " " " S10R
" 2 " opp. Hand " " " S10L
" 2 " as shown " " " S12

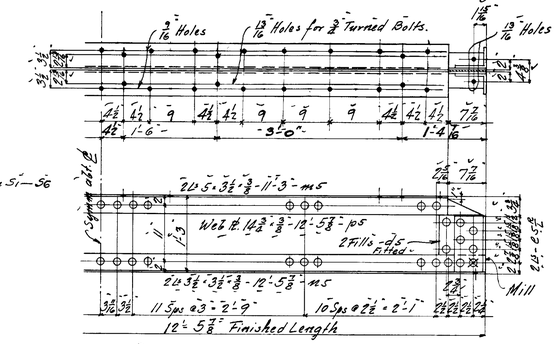

Make 32 Stringers - Mark S17

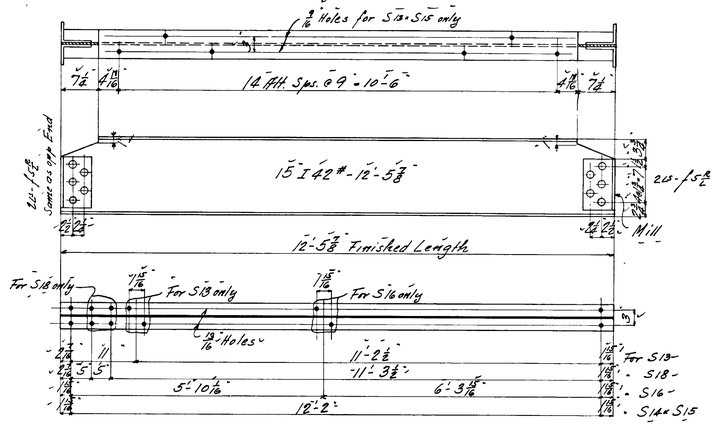

Make 8 Stringers as shown & noted - Mark S13R
" 8 " opp Hand " " " S13L
" 32 " as shown " " " S14
" 16 " " " " " " S15
" 8 " " " " " " S16R
" 8 " opp Hand " " " S16L
" 8 " as shown " " " S18

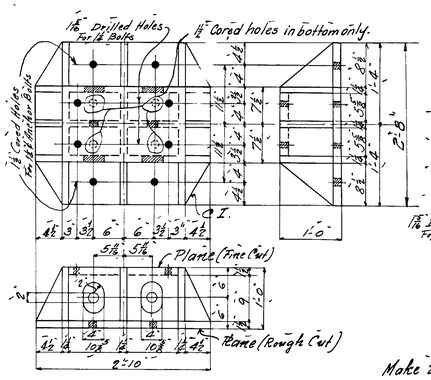

Make 4 Pier Castings - Mark C1

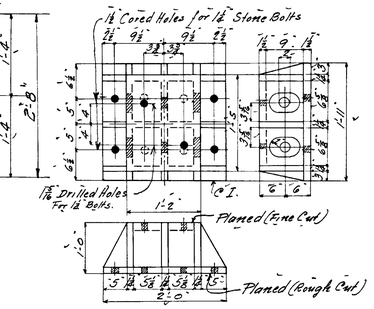

Make 2 Abutment Castings as shown - Mark C2R
" 2 " " opp. Hand - " C2L

Note - 15/16 Holes, 7/8 Rivs. except as noted

SHOP PAINT:- One Coat Red Lead. (as specified.)

APPROVED [signature] ENGINEER OF BRIDGE DESIGN
APPROVED [signature] ENGINEER IN CHARGE OF BRIDGES
APPROVED [signature] CITY ENGINEER
APPROVED [signature] COMMISSIONER OF PUBLIC WORKS

J.A. 9-18-13

STRINGER'S

IRVING PARK BOULEVARD BRIDGE

OVER THE NORTH BRANCH OF THE CHICAGO RIVER

Chicago Steel Products Company
Steel Contractors
Chicago, Ills

PAINT-
SHOP:- 1 coat Red Lead
DRAWING No 7504
FILE No 15-60-27

REG No. 404
SHOP No. 795
SHEET No. 5
MADE BY. T.P. 7-16-13
CHECKED BY G 7-31-13

Size-24"x35"

1660820035

6

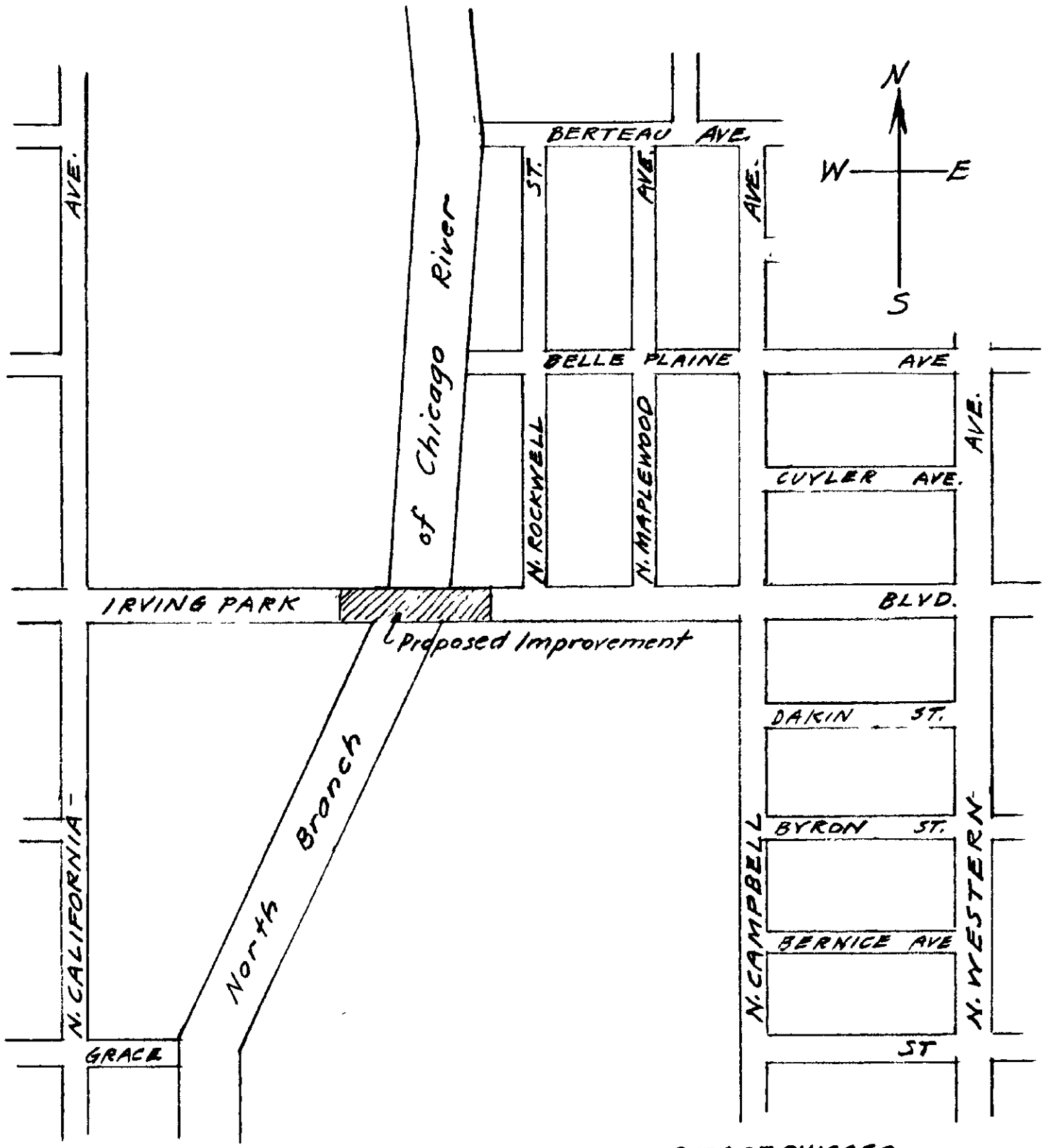

CITY OF CHICAGO
DEPARTMENT OF PUBLIC WORKS
BUREAU OF ENGINEERING
DIVISION OF BRIDGES

IRVING PARK BLVD. BRIDGE

SKETCH SHOWING PROPOSED IMPROVEMENT

Scale: 1 In. = 400 Ft. October 5, 1936.

Drawing No. 14712.
File 14-D6-417

Note: To accompany resolution authorizing distribution of Motor Fuel Tax Funds.

1660820036

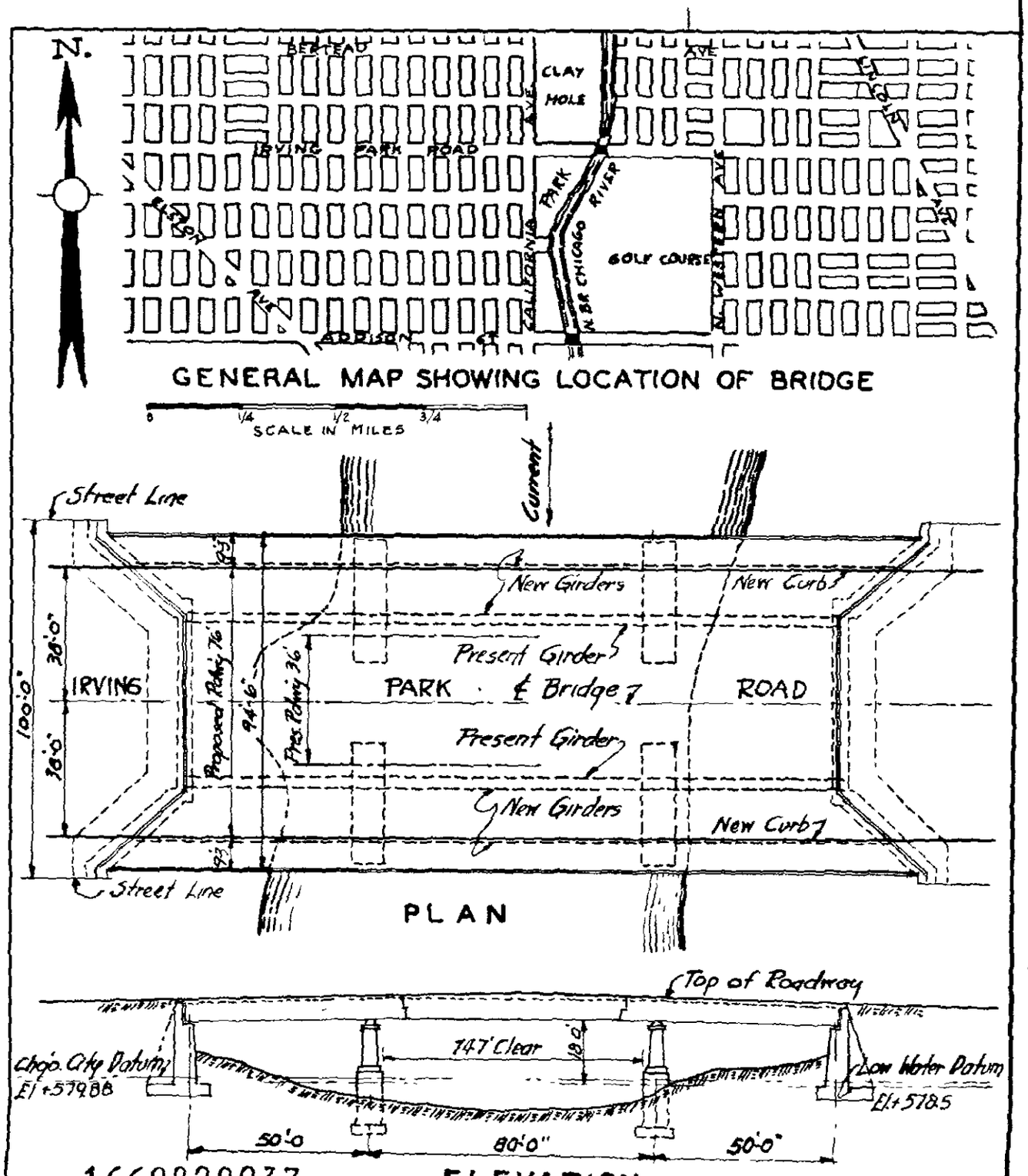

1660820037

Correct [signature] Asst Engineer of Bridge Design

Correct [signature] Engineer of Bridge Design

Approved [signature] Engineer of Bridges

Approved [signature] City Engineer

Approved [signature] Commissioner of Public Works

CITY OF CHICAGO
DEPARTMENT OF PUBLIC WORKS
BUREAU OF ENGINEERING
DIVISION OF BRIDGES

PROPOSED WIDENING OF BRIDGE
AT
IRVING PARK ROAD
OVER
NORTH BRANCH
OF
CHICAGO RIVER

April 15, 1944.

Drawing 16186.
File 14-D1-1585.

Superseded

135 A per 2

REVISIONS

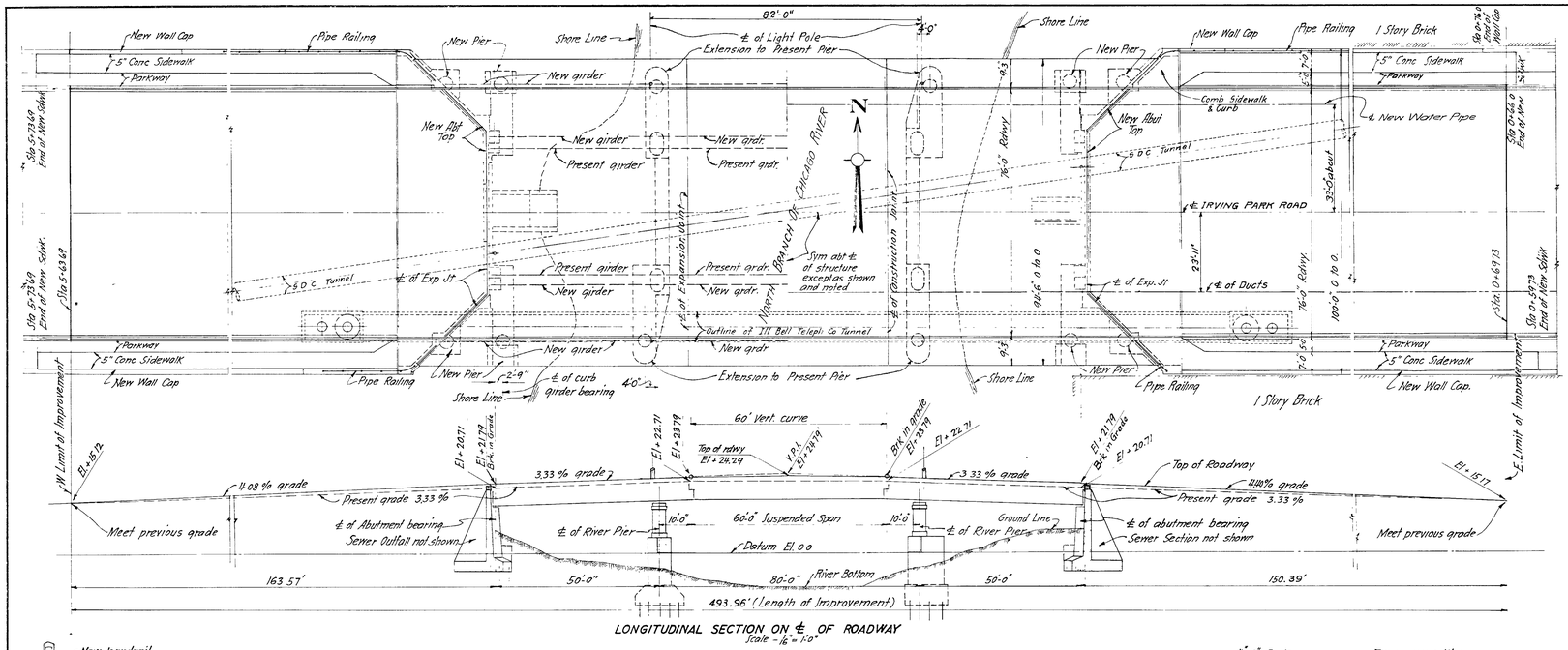

LONGITUDINAL SECTION ON ℄ OF ROADWAY
Scale - 1/16" = 1'-0"

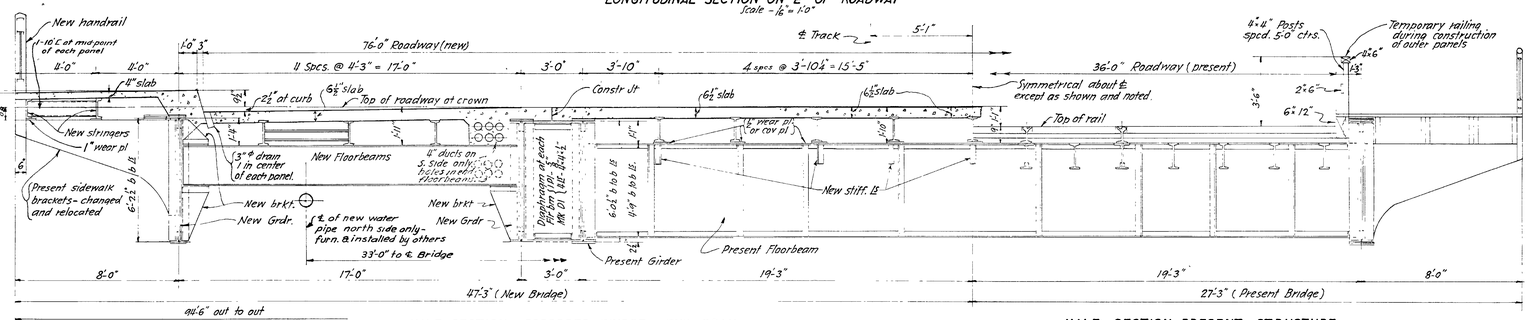

HALF SECTION - PROPOSED BRIDGE - END SPAN
Scale - 3/8" = 1'-0"

HALF SECTION - PRESENT STRUCTURE
Scale 3/8" to 1'-0"

NOTE:- All stringers (roadway and sidewalk) are new. Present sidewalk brackets shall be used and re-located when found to be in good condition.

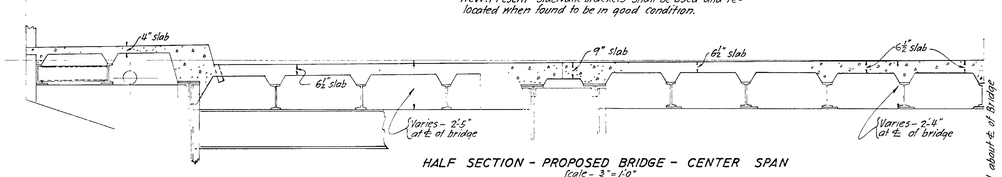

HALF SECTION - PROPOSED BRIDGE - CENTER SPAN
Scale - 3/8" = 1'-0"
Section shown is at ℄ of Bridge - Parts not shown, same as in section above.

CROWN OF ROADWAY

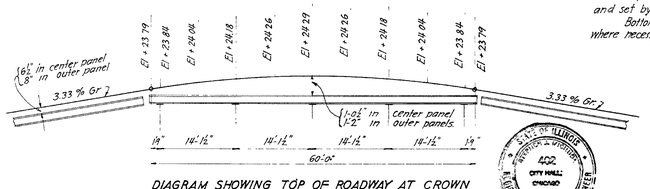

DIAGRAM SHOWING TOP OF ROADWAY AT CROWN

CONDITIONS OF LOADING

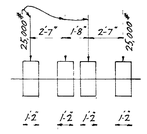

50 TON TRAILER TRUCK

One line of wheels as shown
No impact
Trailer passage is to be confirmed to center 20 ft section of bridge
No other L L shall be on the center section of the structure, during passage of this load, and allowable stresses may be increased 50 %

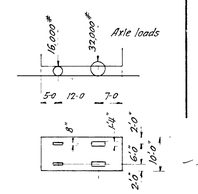

24 TON TRUCK

UNIFORM LIVE LOADS
Roadway - 125# per sq ft
Sidewalk - 100# " " "

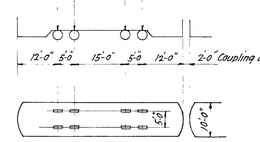

50 TON STREET CAR

APPLICATION OF LOADS

All members of structure are designed for two lines of loading units on each side of the ℄ of structure, placed in their proper traffic direction and with the remaining contributing area covered with the specified uniform loads. Or the special 50 ton trailer truck shall be used in the design under conditions as noted above.

One loading unit consists of one 24 ton truck or one continuous line of 50 ton street cars. Units may be placed abreast or in line.

Impacts used are based on the following formula

$$I = \frac{n}{L+125}\left(\frac{L+250}{L+500}\right)$$

Where n = coefficient based on loaded width
L = length of structure loaded (longitudinal)
Dead Loads - Concrete slabs on roadway and sidewalk as shown

NOTE -

For construction program and maintenance of traffic, see Specifications.

Present Material:

Present floorbeams at abutments to be replaced. Other present floorbeams to be reinforced as shown and to remain in place.

Present girders to remain in place. Brackets to be removed and new diaphragms added.

Present sidewalk brackets shall be re-used when found to be in good condition and subject to the direction of the Commissioner of Public Works. Present rail and roadway stringers shall be removed.

Alterations and changes must, of course, match present steel details. For this purpose, prints of the design and shop drawings of the present structure are available to the Contractor.

Ducts - All transite ducts and fittings, and all expansion and construction joint material pertaining to ducts, to be furnished by the Commonwealth Edison Co.

Water Pipe - Present 8"ø water pipe to be removed and new 8"ø water pipe installed - all by the Water Pipe Extension Div. of the City.

Light Poles - Type A3F - 8.5' - 4 Reqd. Poles to be furnished and set by others. Anchor bolts & setting plates to be furn. & set by this Contractor.

Bottom Lateral Bracing - Present bracing to remain in place and reconnected where necessary. Care shall be taken not to damage it during reconstruction.

Scale of Tracing.

3/8" = 1'-0" 0 1 2 3 4 5 6 7 8 9 10 11
1/16" = 1'-0" 0 8 16 24 32 40 48 56 64

I HEREBY CERTIFY THAT THESE PLANS WERE PREPARED UNDER MY SUPERVISION AND THAT THEY COMPLY TO THE BEST OF MY KNOWLEDGE AND BELIEF, WITH THE STRUCTURAL REQUIREMENTS OF THE ORDINANCES OF THE CITY OF CHICAGO.
Stephen Gmikula

STATE OF ILLINOIS REGISTERED STRUCTURAL ENGINEER 402 CITY HALL CHICAGO

Correct Donald M. Gardner 3/4/57 Asst. Bridge Engineer
Approved Asst. City Bridge & Viaduct Engineer
Approved Stephen Gmikula City Bridge & Viaduct Engineer
Approved City Engineer
Approved Commissioner of Public Works

CITY OF CHICAGO
DEPARTMENT OF PUBLIC WORKS
BUREAU OF ENGINEERING
DIVISION OF BRIDGES AND VIADUCTS

WIDENING OF W. IRVING PARK ROAD FIXED BRIDGE OVER THE NORTH BRANCH---CHICAGO RIVER

SHOWING

GENERAL PLAN AND SECTIONS

Scale 3/8" = 1 Foot	September, 1954
Drawn by A. Nosek & E.R.	DRWG. 16214 SUPER 1 OF 9
Traced by M. Kamp	
Checked by E.E. Roth	SUB 1 OF 5
In Charge of E. Nichols	FILE No 11-6-0.28

135A-Per 400-3430

1660820038

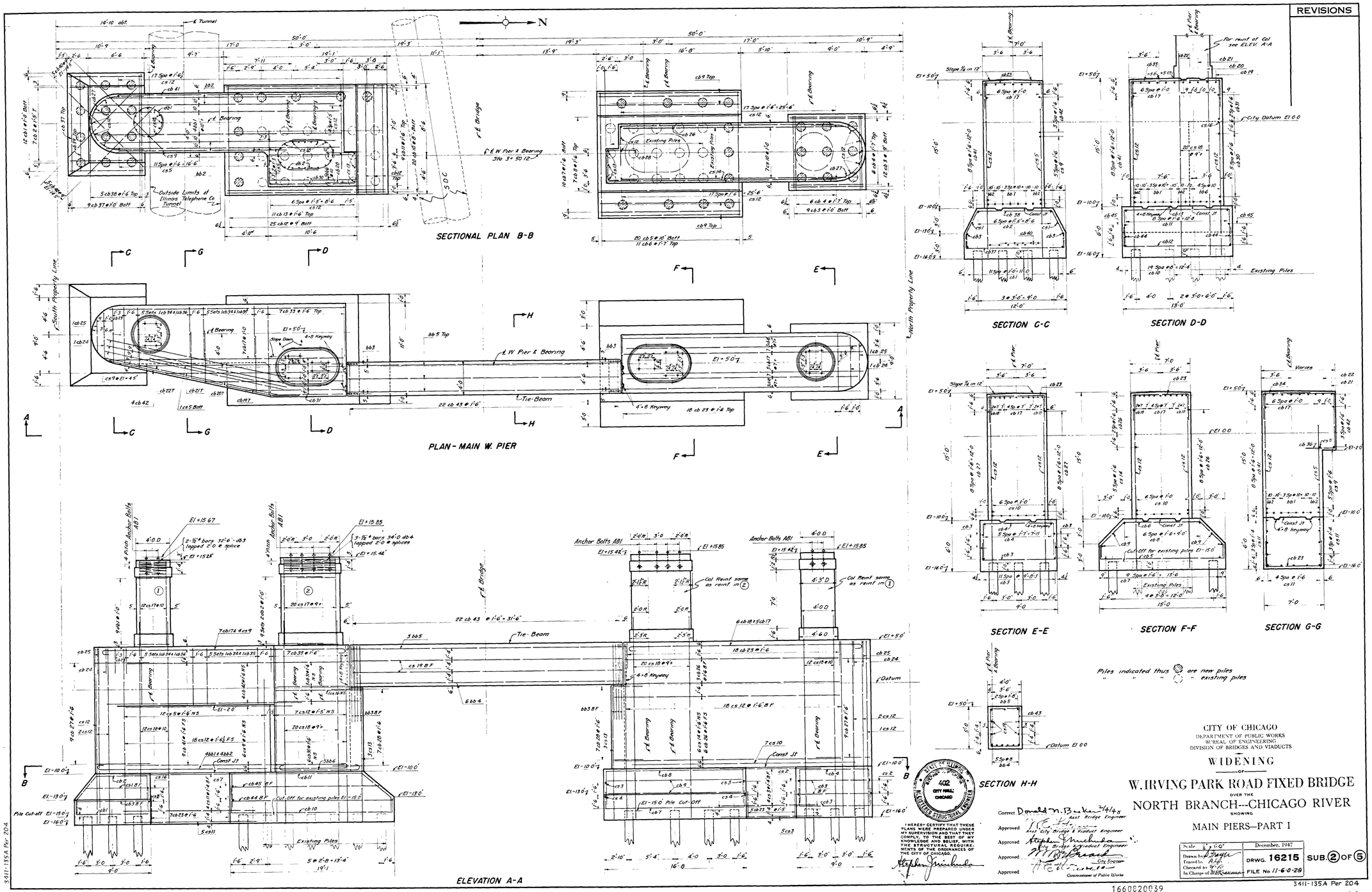

CITY OF CHICAGO
DEPARTMENT OF PUBLIC WORKS
BUREAU OF ENGINEERING
DIVISION OF BRIDGES AND VIADUCTS

WIDENING
OF
W. IRVING PARK ROAD FIXED BRIDGE
OVER THE
NORTH BRANCH---CHICAGO RIVER
SHOWING
MAIN PIERS—PART I

STATE OF ILLINOIS
402
CITY HALL
CHICAGO
REGISTERED STRUCTURAL ENGINEER

I HEREBY CERTIFY THAT THESE PLANS WERE PREPARED UNDER MY SUPERVISION AND THAT THEY COMPLY, TO THE BEST OF MY KNOWLEDGE AND BELIEF, WITH THE STRUCTURAL REQUIREMENTS OF THE ORDINANCES OF THE CITY OF CHICAGO.

Stephen J. Michuda

Correct Donald N. Becker 2/4/48
Asst Bridge Engineer
Approved
Asst City Bridge & Viaduct Engineer
Approved Stephen J. Michuda
City Bridge & Viaduct Engineer
Approved
City Engineer
Approved
Commissioner of Public Works

Scale 1/2" = 1'-0"	December, 1947
Drawn by	DRWG. 16215
Traced by	
Checked by	FILE No 11-6-0-29
In Charge of	

SUB. 2 OF 5

3411-135A Per 204

1660820039

3411-135A Per 204

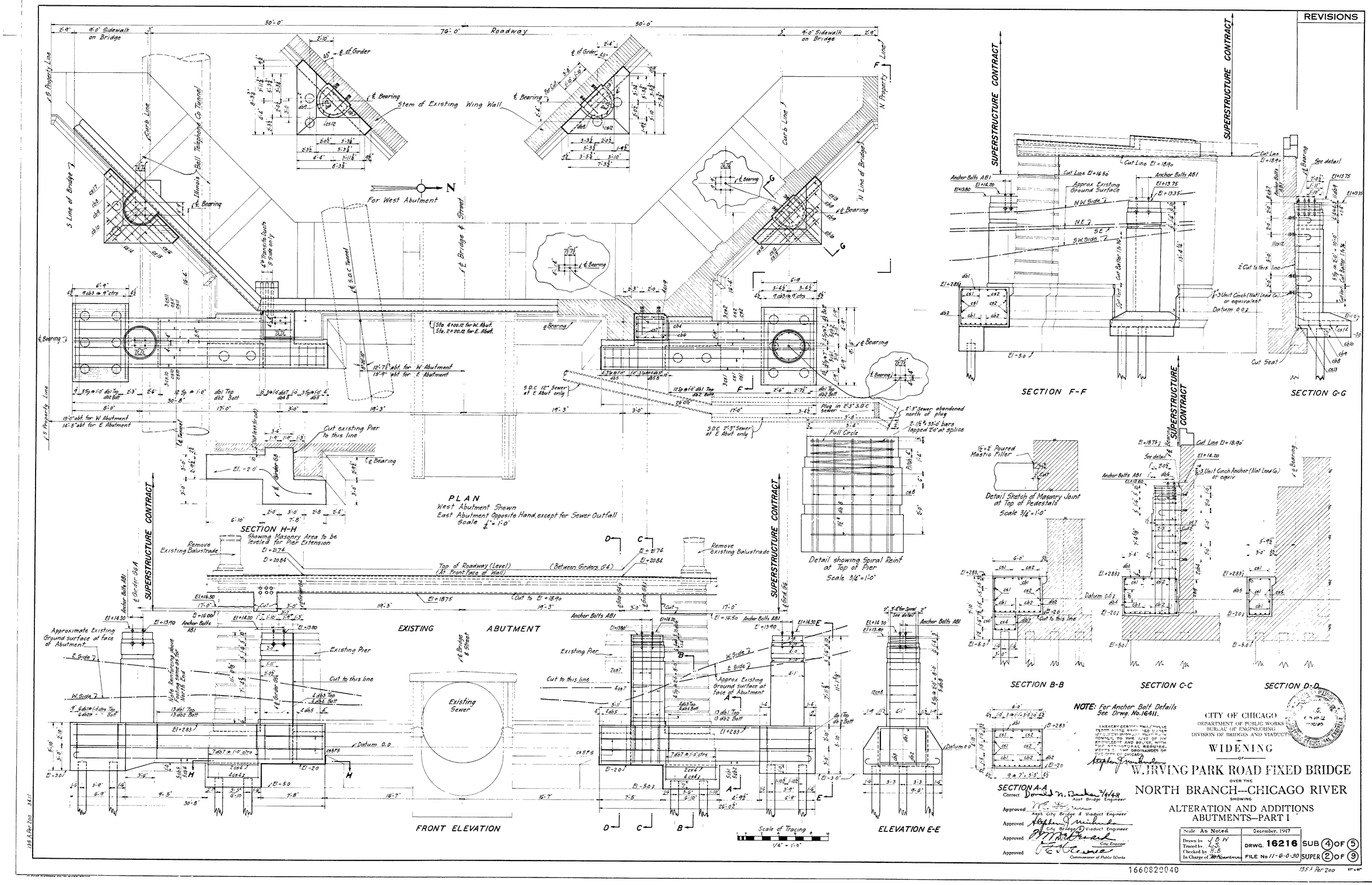
REVISIONS
PLAN
West Abutment Shown
East Abutment Opposite Hand, except for Sewer Outfall
Scale 1/4" = 1'-0"
SECTION H-H
Showing Masonry Area to be leveled for Pier Extension
EXISTING ABUTMENT
FRONT ELEVATION
ELEVATION E-E
SECTION F-F
SECTION G-G
SECTION B-B
SECTION C-C
SECTION D-D
SECTION A-A
Detail showing Spiral Reinf at Top of Pier
Scale 3/4" = 1'-0"
Detail Sketch of Masonry Joint at Top of Pedestals
Scale 3/4" = 1'-0"
Roadway
For West Abutment
Stem of Existing Wing Wall
Approximate Existing Ground surface at face of Abutment
Approx Existing Ground surface at face of Abutment
Existing Sewer
Scale of Tracing
1/4" = 1'-0"
SUPERSTRUCTURE CONTRACT
NOTE: For Anchor Bolt Details See Drwg. No. 16411.
CITY OF CHICAGO
DEPARTMENT OF PUBLIC WORKS
BUREAU OF ENGINEERING
DIVISION OF BRIDGES AND VIADUCTS
WIDENING
OF
W. IRVING PARK ROAD FIXED BRIDGE
OVER THE
NORTH BRANCH---CHICAGO RIVER
SHOWING
ALTERATION AND ADDITIONS
ABUTMENTS--PART I
Scale As Noted
December, 1947
Drawn by J.B.W.
Traced by L.S.
Checked by H.B.
In Charge of
DRWG. 16216
FILE No 11-6-0-30
SUB 4 OF 5
SUPER 2 OF 9
1660820040

REVISIONS

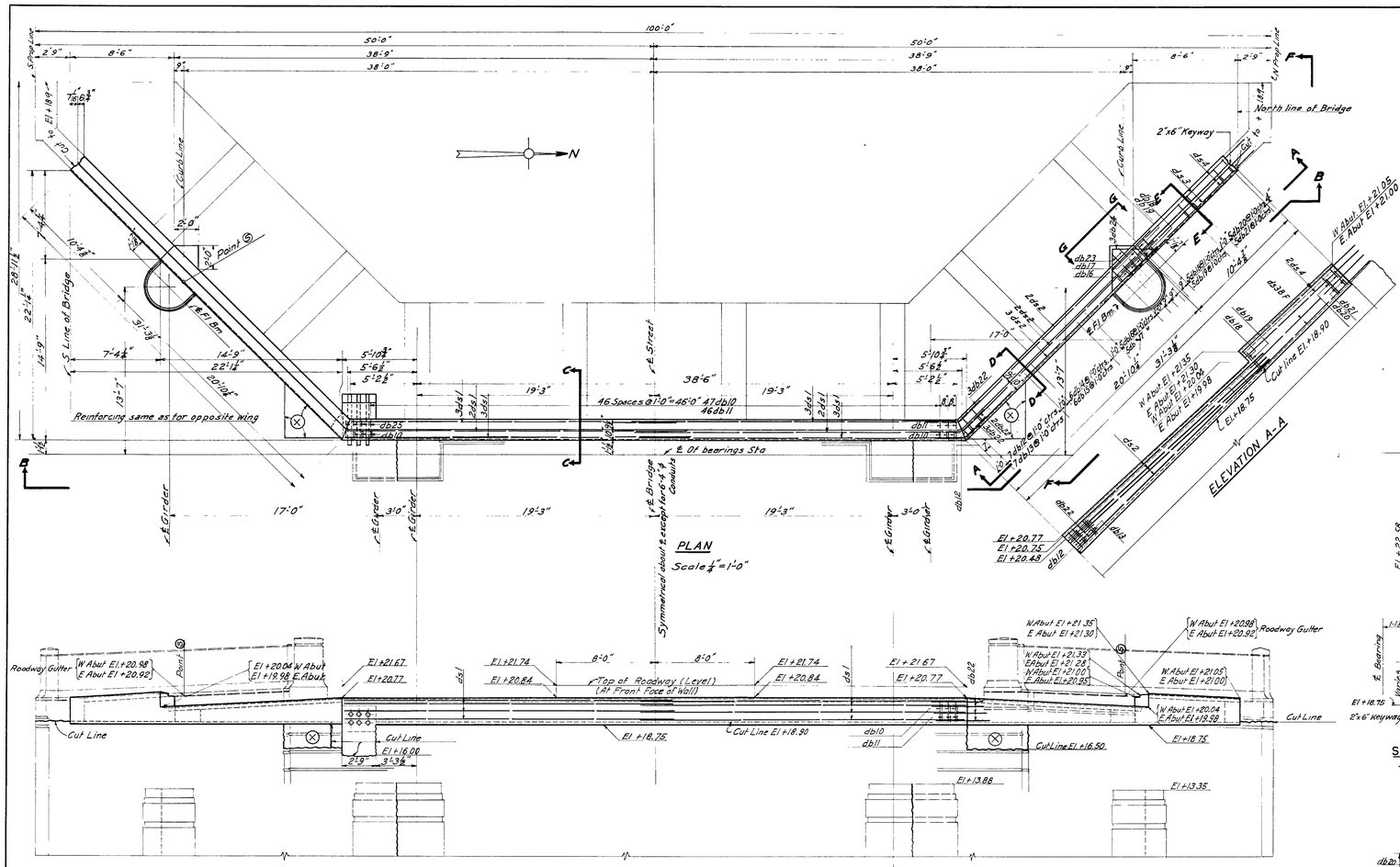

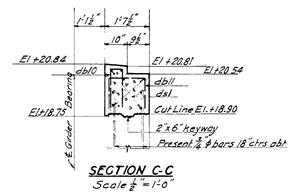

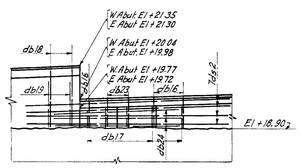

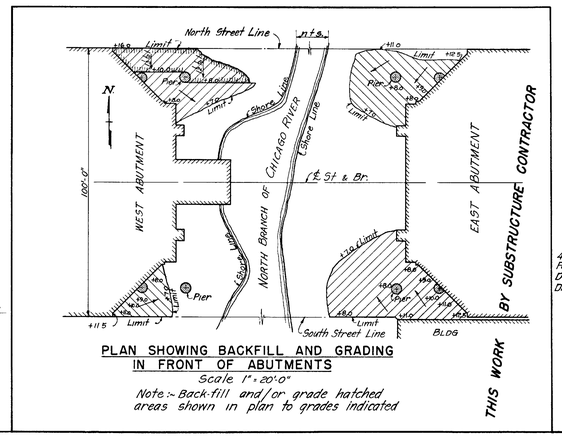

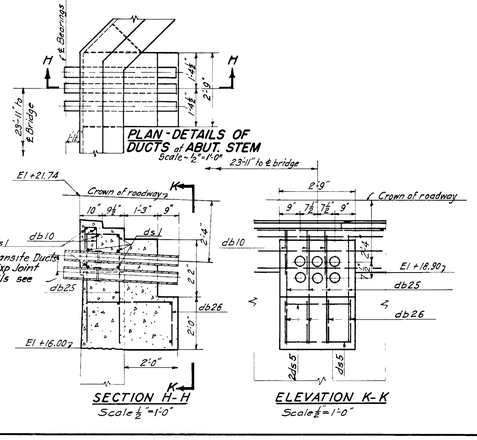

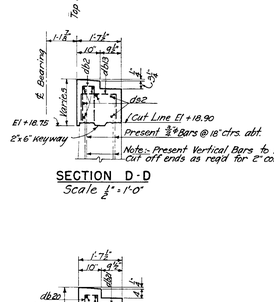

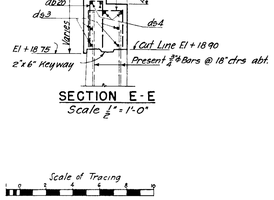

Scale of Tracing
0 1 2 3 4 5 6
1/4" = 1'-0"

BILL OF REINFORCING WEST ABUTMENT

MARK	NUMBER	SIZE	LENGTH	TYPE	LOCATION FOOTING	STRAP PIERS	BACKWALL	BENDING A	B	C
cb1	5	"	26'5"	I	5			25'0"		
cb2	5	"	22'3"	I	5			20'0"		
cb3	18	"	11'0"	II	18			8'2"		
cb4	16	"	4'5"	VI			16	3'0"		
cb5	5	"	31'0"	I	5			29'7"		
cb6	5	"	28'10"	I	5			25'5"		
cb7	16	"	3'11"	VII			16	2'6"		
cb8	2	"	11'2"	II	2			8'4"		
cb9	2	"	8'6"	II	2			5'8"		
cb10	2	"	5'10"	II	2			3'0"		
cs1	5	3/8ϕ	25'6"	stg		5				
cs2	5	"	21'6"	"		5				
cs4	12	"	6'4"	"		12				
cs5	4	"	6'9"	"		4				
cs7	24	"	15'4"	"			24			
cs8	24	"	15'6"	"			24			
cs9	8	"	3'6"	"		8				
cs10	5	"	30'1"	"		5				
cs11	5	"	26'1"	"		5				
cs12	22	"	15'0"	"			22			
cs13	1	"	10'0"	"	1					
cs14	4	"	5'5"	"	4					
cs15	4	"	4'0"	"	4					
cs16	4	"	3'10"	"	4					
cs17	1	"	11'0"	"	1					
db1	33	5/8ϕ	11'0"	III	33			2'9"	5'6"	
db2	33	"	13'6"	III	33			4'0"	5'6	
db3	8	"	11'9"	III	8			2'9"	6'3"	
db4	8	"	14'3"	III	8			4'0"	6'3"	
db5	8	"	14'8"	IV	8			2'6"	4'4"	
db6	20	"	12'6"	IV		20		2'6"	3'3"	
db7	14	"	10'5"	III	14			4'0"	2'5"	
db8	10	"	12'5"	V		10				
db9	22	"	12'0"	VIII		22				
db10	51	"	3'6"	III			51	1'6"	0'6"	
db11	48	"	3'12"	III			48	1'2"	1'3 1/2"	
db12	16	"	3'2"	III			16	1'4"	0'6"	
db13	14	"	3'3 1/2"	III			14	1'0"	1'3 1/2"	
db14	12	"	2'10"	III			12	1'2"	0'6"	
db15	12	"	2'11 1/2"	III			12	0'10"	1'3 1/2"	
db16	16	"	2'4"	III			16	0'11"	0'6"	
db17	12	"	2'5 1/2"	III			12	0'7"	1'3 1/2"	
db18	12	"	4'8"	III			12	2'1"	0'6"	
db19	12	"	4'9 1/2"	III			12	1'9"	1'3 1/2"	
db20	10	"	4'0"	III			10	1'9"	0'6"	
db21	10	"	4'1 1/2"	III			10	1'8"	1'3 1/2"	
db22	16	"	5'0"	VIII			16	1'8"	2'6"	
db23	4	"	3'5"	III			4	0'8"	2'1"	
db24	6	"	6'6"	IX			6	3'3"	3'3"	
db25	4	"	9'5 1/2"	III			4	4'1"	1'3 1/2"	
db26	4	"	4'10"	IX			4	1'8"	3'2"	
ds1	16	5/8ϕ	25'5"	Stg			16			
ds2	14	"	23'0"	"			14			
ds3	8	"	13'0"	"			8			
ds4	8	"	18'6"	"			8			
ds5	3	"	8'6"	"			3			

BENT BARS

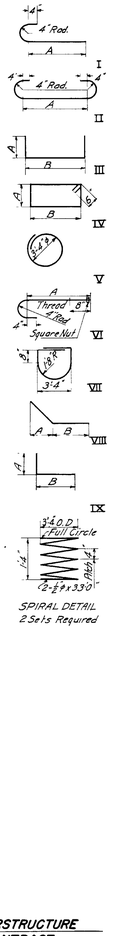

SUPERSTRUCTURE CONTRACT

NOTE:- Above reinforcing bar list is for one Abutment only. Bill of reinforcing for East Abutment same as West Abutment

I HEREBY CERTIFY THAT THESE PLANS WERE PREPARED UNDER MY SUPERVISION AND THAT THEY COMPLY, TO THE BEST OF MY KNOWLEDGE AND BELIEF, WITH THE STRUCTURAL REQUIREMENTS OF THE ORDINANCES OF THE CITY OF CHICAGO.

Correct Donald M. Burdick 7/16/48. Asst Bridge Engineer
Approved ... Asst City Bridge & Viaduct Engineer
Approved Stephen J. Michuda City Bridge & Viaduct Engineer
Approved ... Commissioner of Public Works

CITY OF CHICAGO
DEPARTMENT OF PUBLIC WORKS
BUREAU OF ENGINEERING
DIVISION OF BRIDGES AND VIADUCTS

WIDENING OF W. IRVING PARK ROAD FIXED BRIDGE OVER THE NORTH BRANCH---CHICAGO RIVER

SHOWING

ALTERATION AND ADDITIONS ABUTMENTS---PART II

Scale- As Noted	December, 1947
Drawn by J.B.W. Traced by P.H.J. Checked by H.B. In Charge of H.L. Bowman	DRWG. 16217 SUB (5) OF (5) FILE No. 11-6-0-31 SUPER (3) OF (9)

1660820041 135 A per 202

135 A per 202 3411

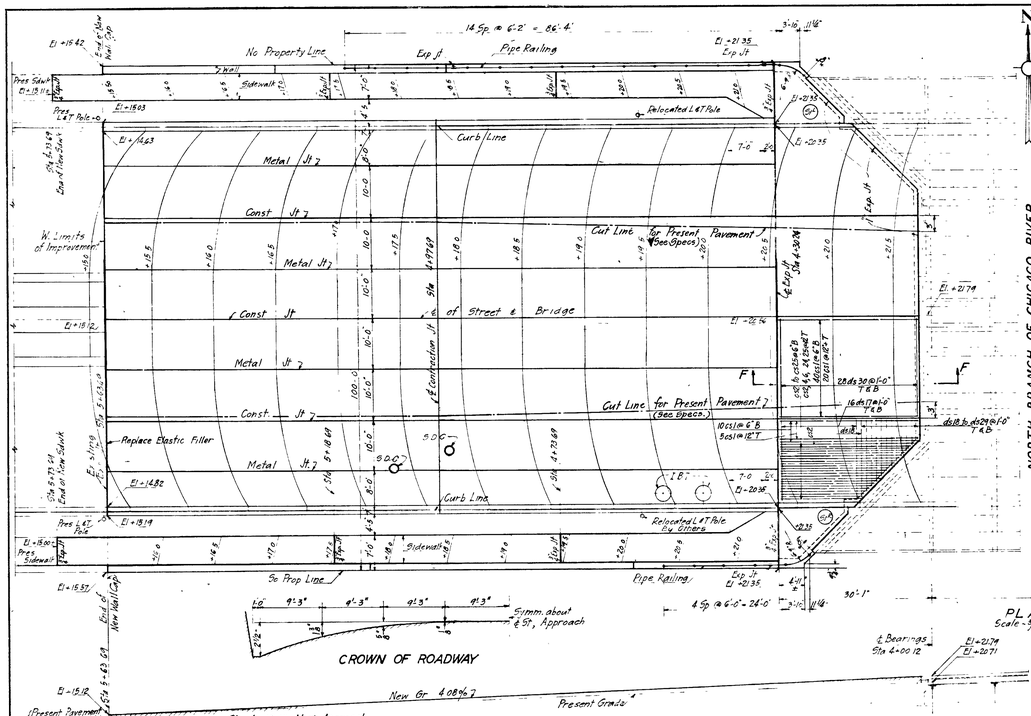

REVISIONS

BILL OF REINFORCING									
Mark	Number	Size	Length	Type	Spacing	Weight	BENDING A	B	C	D
cb1	300	5/8" ø	27'-9"	St.	5'-0"					
cb2	6	#	27'-3"	+	8					
cb3	4	#	26'-9"	+	6					
cb4	8	#	26'-3"	+	8					
cb5	6	#	25'-9"	+	6					
cb6	8	#	25'-3"	+	8					
cb7	6	#	24'-9"	+	6					
cb8	8	#	24'-3"	+	8					
cb9	6	#	23'-9"	+	6					
cb10	8	#	23'-3"	+	8					
cb11	6	#	22'-9"	+	6					
cb12	8	#	22'-3"	+	8					
cb13	6	#	21'-9"	+	6					
cb14	8	#	21'-3"	+	8					
cb15	6	#	20'-9"	+	6					
cb16	8	#	20'-3"	+	8					
cb17	6	#	19'-9"	+	6					
cb18	8	#	19'-3"	+	8					
cb19	6	#	18'-9"	+	6					
cb20	8	#	18'-3"	+	8					
cb21	6	#	17'-9"	+	6					
cb22	8	#	17'-3"	+	8					
cb23	6	#	16'-9"	+	6					
cb24	8	#	16'-3"	+	8					
cb25	6	#	15'-9"	+	6					
db1	12	5/8" ø	31'-5"	St.	10'-0"	126				
db2	6	#	31'-3"	+	6					
db3	4	#	30'-9"	+	4					
db4	12	#	30'-3"	+	12					
db5	8	#	29'-9"	+	8					
db6	6	#	29'-3"	+	6					
db7	20	#	28'-9"	+	20					
db8	12	#	28'-3"	+	12					
db9	4	#	27'-9"	+	4					
db10	6	#	27'-3"	+	6					
db11	24	#	26'-9"	+	24	26	(N.W. Wall)			
db12	24	#	27'-0"	+	24	29	(S.W. ")			
db13	6	#	27'-9"	+	6					
db14	6	#	28'-3"	+	6	6	(N.E. ")			
db15	24	#	28'-9"	+	24					
db16	36	#	29'-3"	+	36	56	(S.E. ")			
db17	126	#	29'-9"	+	126					
db18	8	#	30'-3"	+	8					
db19	8	#	30'-9"	+	8					
db20	8	#	31'-3"	+	8					
db21	8	#	31'-9"	+	8					
db22	8	#	32'-3"	+	8					
db23	8	#	32'-9"	+	8					
db24	8	#	33'-3"	+	8					
db25	8	#	33'-9"	+	8					
db26	8	#	34'-3"	+	8					
db27	8	#	34'-9"	+	8					
db28	8	#	35'-3"	+	8					
db29	8	#	35'-9"	+	8					
db30	224	#	36'-3"	+	224					
db1	16	5/8" ø	16'-8"	I	16	10	4.8	1.41		
db2	28	"	5'-1"	II	28	See	Detail			
db3	4	"	9'-0"	III	4	1.6	0.9	6.2	1.39	
db4	4	"	6'-9"	III	4	1.2	0.9	3.3	1.13	
db5	4	"	4'-3"	III	4	0.8	0.9	1.6	0.73	
db6	20	"	3'-0"	III	20	0.6	1.0	1.45	0.6	
db7	4	"	1'-2"	III	4	2.3	0.9	12.2	0.3	
db8	204	"	6'-0"	V	204	See	Detail			
db9	72	"	2'-6"	V	72					
db10	204	"	3'-6"	IV	204	1.4	1.3	1.3		
db11	20	"	4'-6"	VII	20	0.7	0.7	2.10		

1660820042

I HEREBY CERTIFY THAT THESE PLANS WERE PREPARED UNDER MY DIRECT SUPERVISION AND THAT THEY CONFORM TO THE RULES AND REGULATIONS GOVERNING THE STRUCTURAL DESIGN OF THE CITY OF CHICAGO.

CITY OF CHICAGO
DEPARTMENT OF PUBLIC WORKS
BUREAU OF ENGINEERING
DIVISION OF BRIDGES AND VIADUCTS

WIDENING
OF
W. IRVING PARK ROAD FIXED BRIDGE
OVER THE
NORTH BRANCH---CHICAGO RIVER
SHOWING
ALTERATIONS AND ADDITIONS-APPROACHES

Correct: O. M. Reed, M.E.R. Asst Bridge Engineer
Approved: H. T. Lofgren, Asst City Bridge & Viaduct Engineer
Approved: Stephen Gromback, City Bridge & Viaduct Engineer
Approved: W. W. Wentworth, City Engineer
Approved: [illegible], Commissioner of Public Works

STATE OF ILLINOIS — REGISTERED STRUCTURAL ENGINEER — 432 — CITY HALL — CHICAGO

Scale As noted	December 1947
Drawn by J.B.M.	DRWG 16218 SUPER 4 OF 9
Traced by	
Checked by	
In Charge of [illegible]	FILE No 11-6-0-32

135 A Per 203

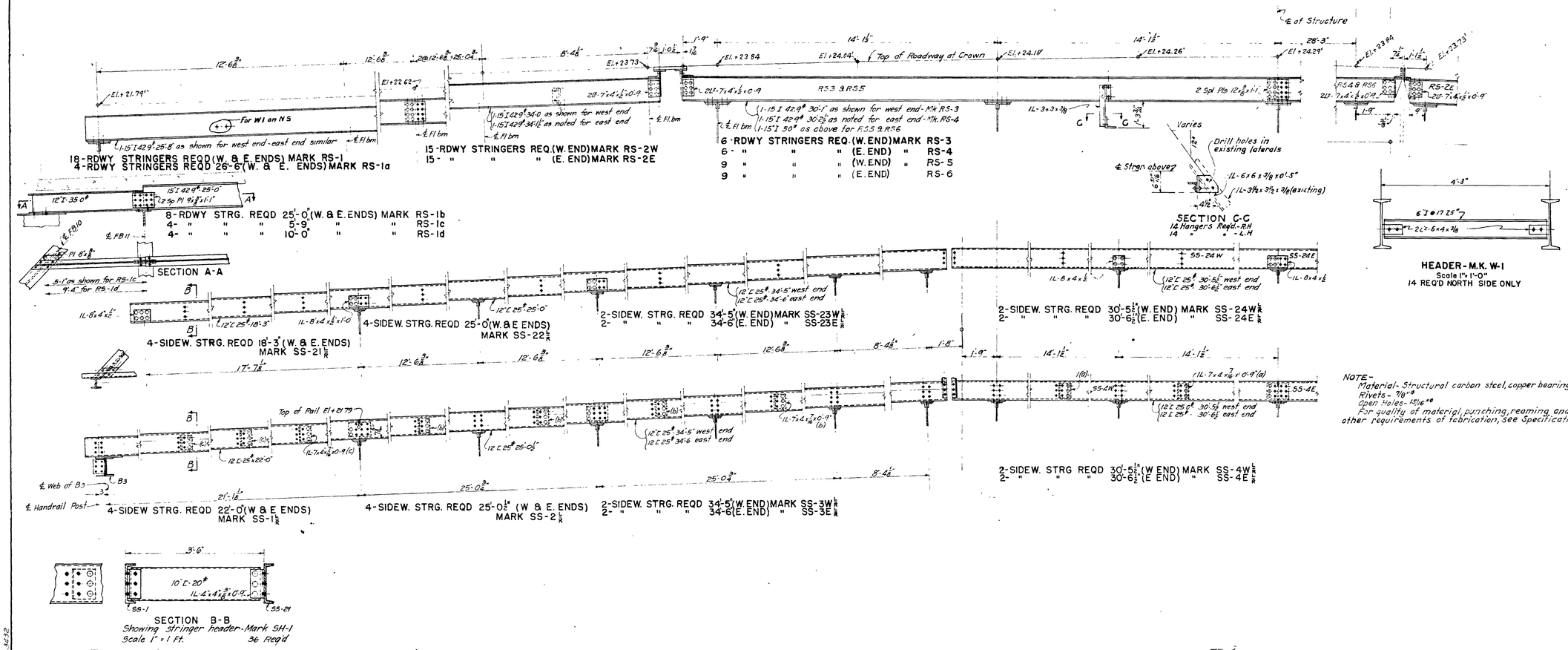

NOTE-
Material- Structural carbon steel, copper bearing.
Rivets- 7/8"ø
Open Holes- 15/16"ø
For quality of material, punching, reaming and other requirements of fabrication, see Specifications.

INCHES 12 9 6 3 0 1 2 3 4 5 6 7 8 FEET
SCALE ½" = 1 FT

CITY OF CHICAGO
DEPARTMENT OF PUBLIC WORKS
BUREAU OF ENGINEERING
DIVISION OF BRIDGES AND VIADUCTS

WIDENING
OF
W. IRVING PARK ROAD FIXED BRIDGE
OVER THE
NORTH BRANCH---CHICAGO RIVER
SHOWING
STRINGERS

I HEREBY CERTIFY THAT THESE PLANS WERE PREPARED UNDER MY SUPERVISION AND THAT THEY COMPLY, TO THE BEST OF MY KNOWLEDGE AND BELIEF, WITH THE STRUCTURAL REQUIREMENTS OF THE ORDINANCES OF THE CITY OF CHICAGO.

Correct D. N. Becker, P.E.R. Asst Bridge Engineer
Approved W. E. Hoffman Asst City Bridge & Viaduct Engineer
Approved Charles Juncker City Bridge & Viaduct Engineer
Approved W. M. McBrand Asst Engineer
Approved H. J. Trevell Commissioner of Public Works

Scale ½" = 1 foot	September, 1944
Drawn by C. A. Randall Traced by J. L. Dorman Checked by L. O. Cole In Charge of E. E. Rohde	DRWG. 16219 SUPER (5) OF (9) FILE No. 11-6-0-33

1660820043

135A Per 404

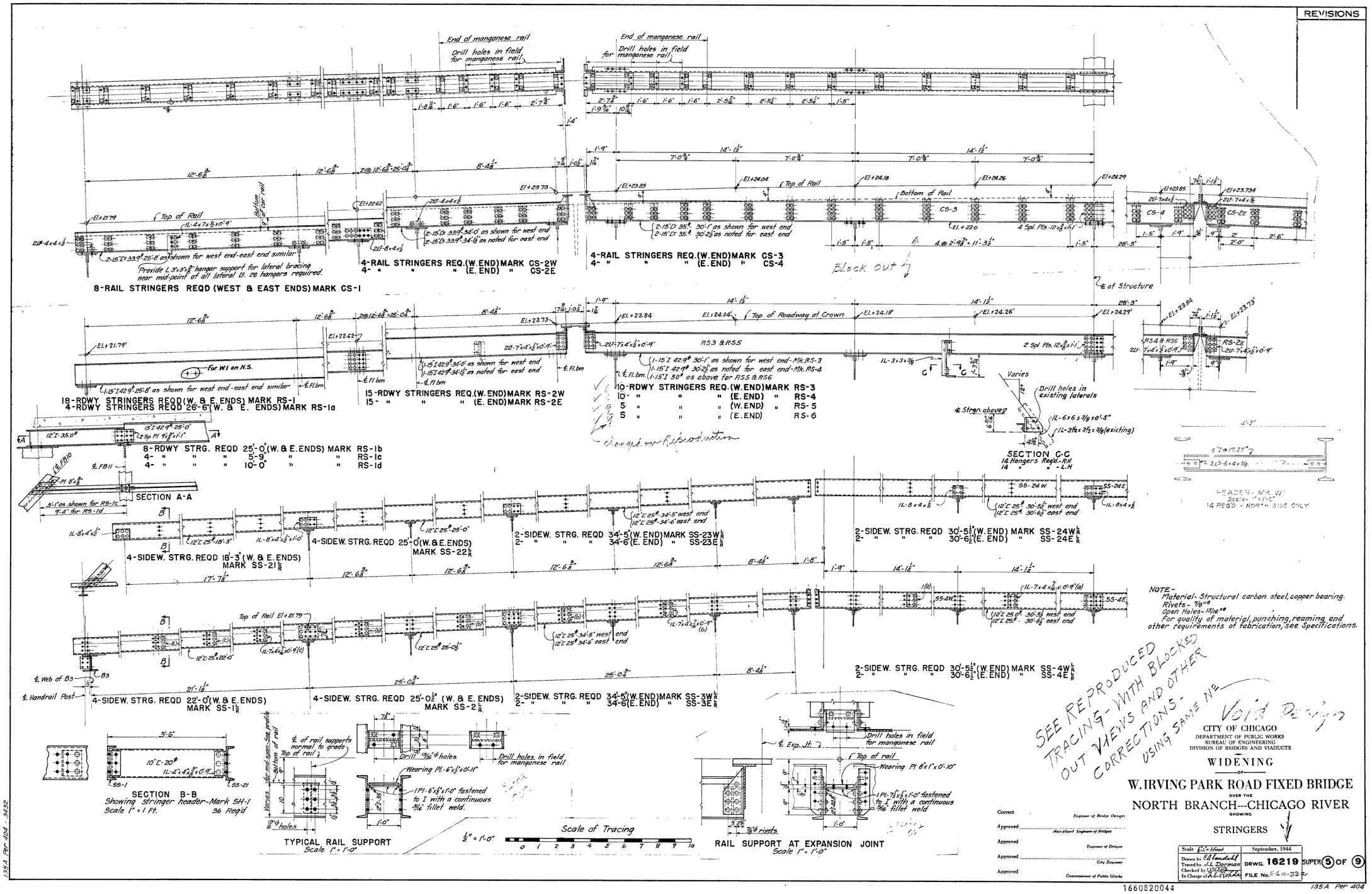

NOTE-
Material- Structural carbon steel, copper bearing.
Rivets - 7/8"ø
Open Holes - 15/16"ø
For quality of material, punching, reaming and other requirements of fabrication, see Specifications.

SEE REPRODUCED TRACING - WITH BLOCKED OUT VIEWS AND OTHER CORRECTIONS - USING SAME No.

Void Design

CITY OF CHICAGO
DEPARTMENT OF PUBLIC WORKS
BUREAU OF ENGINEERING
DIVISION OF BRIDGES AND VIADUCTS

WIDENING
OF
W. IRVING PARK ROAD FIXED BRIDGE
OVER THE
NORTH BRANCH---CHICAGO RIVER
SHOWING
STRINGERS

Correct ..... Engineer of Bridge Design
Approved ..... Assistant Engineer of Bridges
Approved ..... Engineer of Bridges
Approved ..... City Engineer
Approved ..... Commissioner of Public Works

Scale ½" = 1 foot	September, 1944
Drawn by R.A. Randall	DRWG. 16219 SUPER 5 OF 9
Traced by J.L. Dorman	
Checked by W.C.Kuhn	
In Charge of L.E. Rohde	FILE No. 11-60-33a

135A Per 404 - 3432

1660820044

135A Per 404

REVISIONS

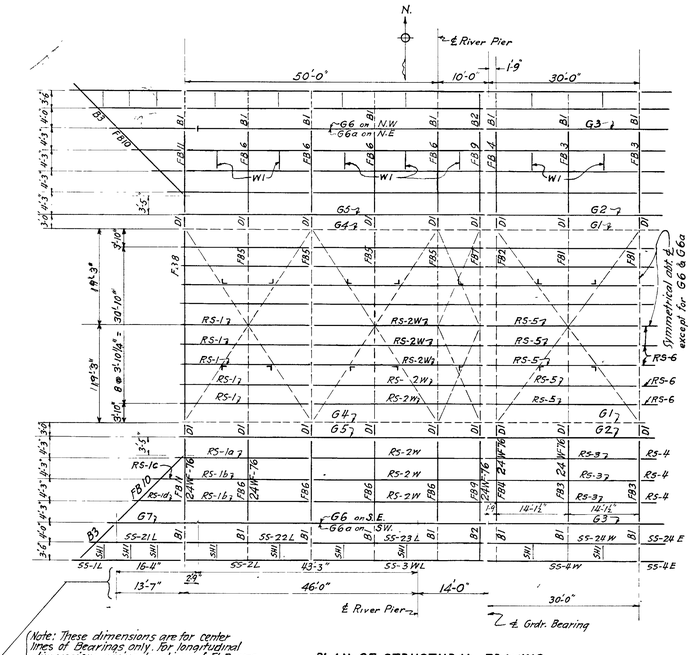

Note: These dimensions are for center lines of Bearings only. For longitudinal dimensions giving locations of Fl. Beams and girders on cantilever span see diagrams below.

PLAN OF STRUCTURAL FRAMING
Scale 3/32" = 1'-0"

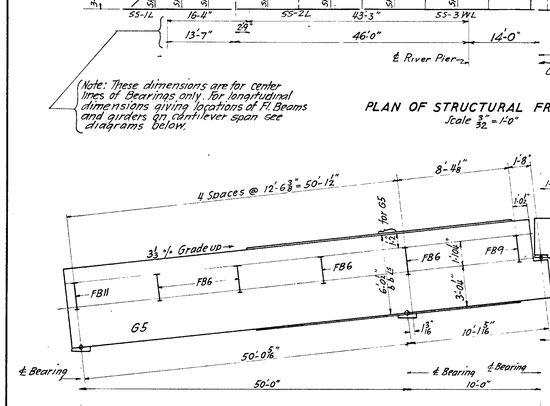

DIAGRAM OF G2 - G3 & G5

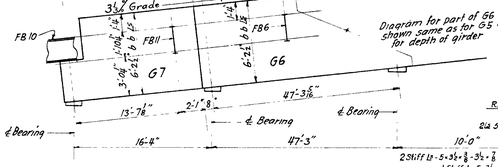

DIAGRAM OF G6 - G7

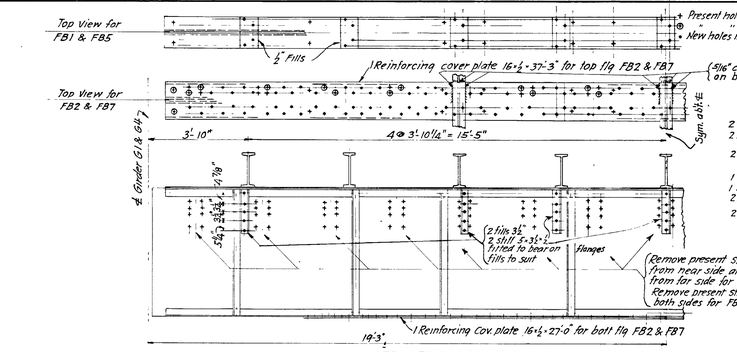

FB1 - FB2 - FB5 & FB7
Showing changes for widened bridge

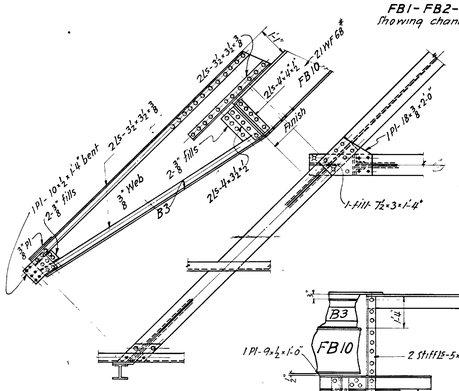

NOTE-
Material- Structural carbon steel- copper bearing.
Rivets- 7/8" ⌀
Open Holes- 15/16" ⌀
For quality of material, punching, reaming, welding and general requirements of fabrication, see Specifications

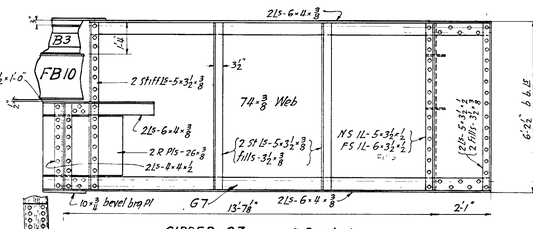

GIRDER G7 4 Required
FLOOR BEAM F10 4 Required
S.W. BRACKET B3 4 Required

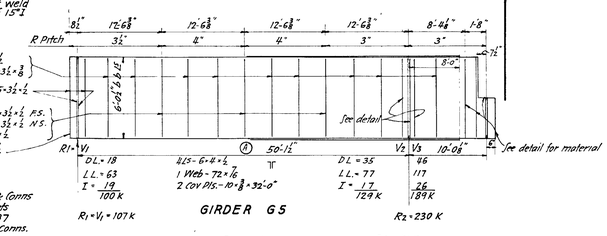

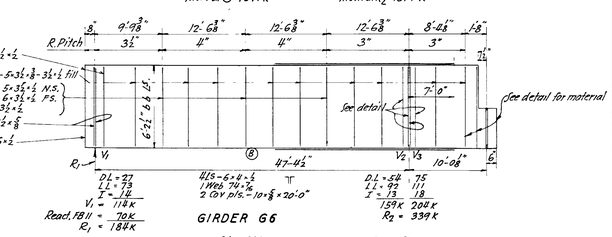

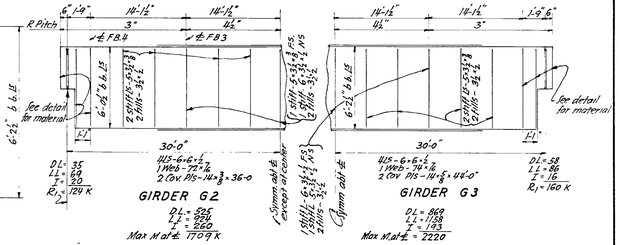

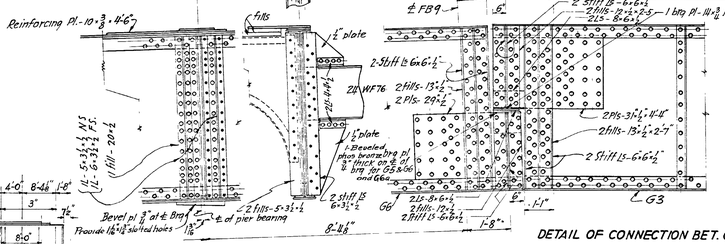

DETAIL AT RIVER PIER FOR G6

" " " " " G5 Similar
" " " " " G6a "

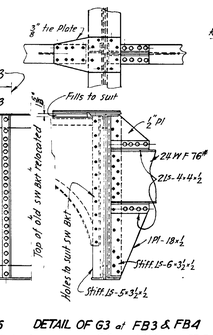

DETAIL OF CONNECTION BET. G3 & G6

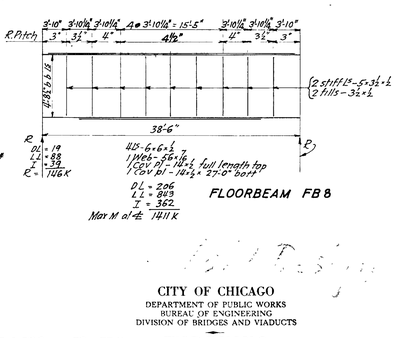

DETAIL OF G3 at FB3 & FB4
" " G6 and G6a at FB6 & FB9, and G7 at FB11
" " G3 & G6a " are similar except at bearing points

Scale of Tracing
3/32" = 1'-0"
1" = 1'-0"

I HEREBY CERTIFY THAT THESE PLANS AND SPECIFICATIONS WERE PREPARED UNDER MY DIRECTION AND SUPERVISION BY THE ENGINEERING STAFF OF THE BUREAU OF ENGINEERING OF THE DEPARTMENT OF PUBLIC WORKS OF THE CITY OF CHICAGO
Stephen Gromlich

Approved
Chief Engineer

CITY OF CHICAGO
DEPARTMENT OF PUBLIC WORKS
BUREAU OF ENGINEERING
DIVISION OF BRIDGES AND VIADUCTS

WIDENING OF W. IRVING PARK ROAD FIXED BRIDGE OVER THE NORTH BRANCH---CHICAGO RIVER

SHOWING

GIRDERS AND FLOORBEAMS

Correct D. M. Becker, A.E.R. Asst Bridge Engineer
Approved J. E. Loran Asst City Bridge & Viaduct Engineer
Approved Stephen Gromlich City Bridge & Viaduct Engineer
Approved W. M. Ericson Chief Engineer
Approved T. J. Flavin Commissioner of Public Works

Scale As noted	September, 1944
Drawn by A.Q.C.	DRWG 16220 SUPER 6 OF 9
Traced by H. Hornsby	
Checked by D.S. Kohler	FILE No. 11-6-0.34
In Charge of D.S. Kohler	

135-A Per 403 3431

1660820045

REVISIONS

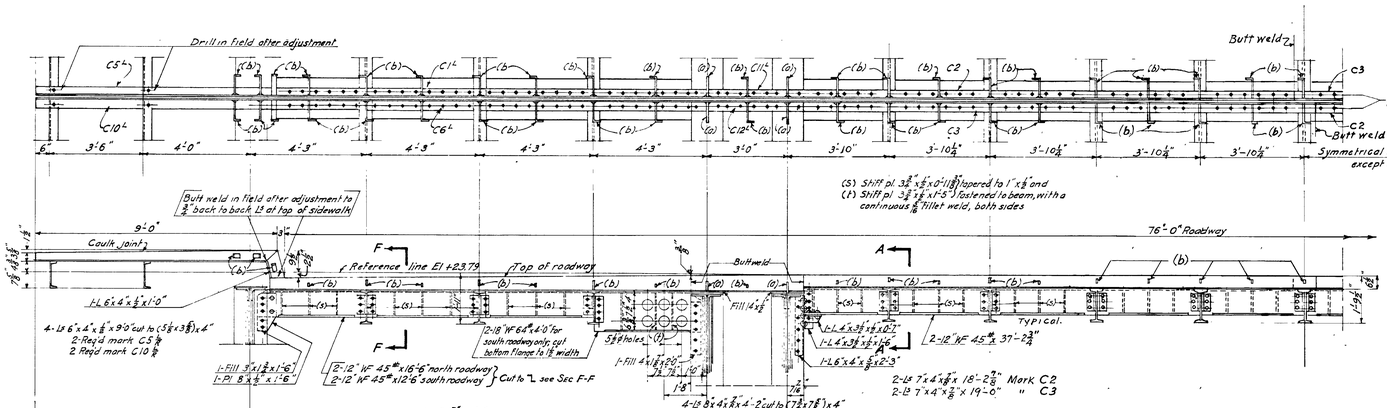

SIDEWALK AND ROADWAY CONSTRUCTION JOINT SECTIONS
Scale ½ inch = 1 Foot

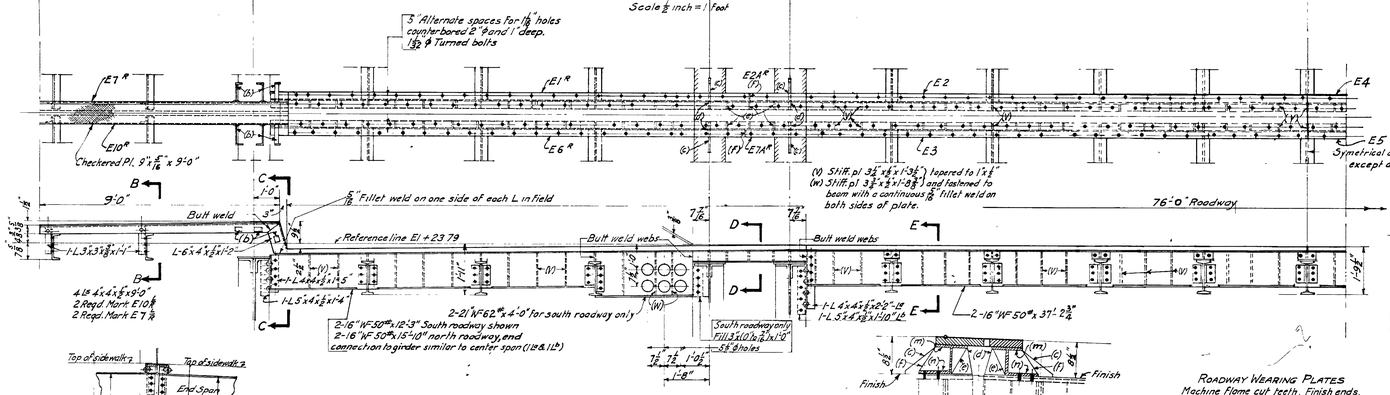

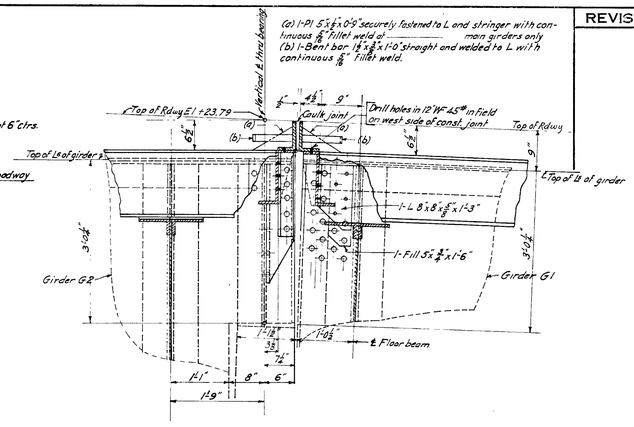

SECTION A-A
Showing Connections To Girders
Scale 1"=1Ft

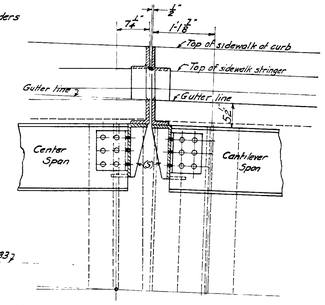

SECTION F-F

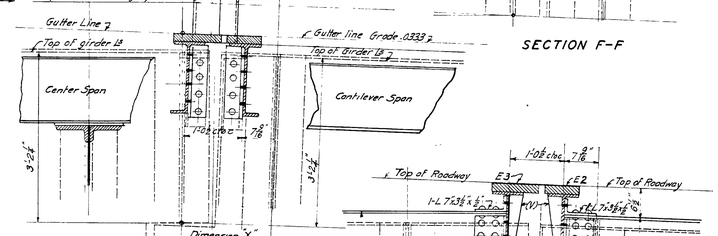

SECTION C-C
Showing Connections To Girders
Scale 1"=1Ft.

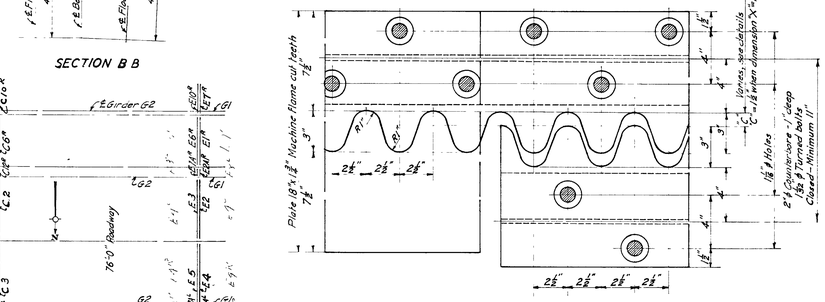

DETAIL PLAN OF ROADWAY WEARING PLATES AT EXPANSION JOINT
Scale 3"=1 Foot

SECTION E-E

SECTION B B

SECTION D-D
Scale 1"=1Ft.

(m) 4 - 16" WF 50#x 4'-2⅜" cut web to 6⅛"
(n) 4 - 7"x⅜"x4'-2⅜" fasten to T web by a continuous ⅜" Fillet weld on top and a V weld on bottom
(c) and (d) ⅜ Pls. fasten to channel and girder with a continuous ⅜" Fillet weld on both sides of plates.
(e) and (f) ⅜ Pls. fasten to channel with a continuous ⅜" Fillet weld on both sides of plates.

ROADWAY WEARING PLATES

Machine Flame cut teeth, Finish ends.		
2 Pls. 15"x⅜" long	Mark	E1
2 Pls. 15"x⅜"	"	E6
2 Pls. 4"x⅜"	"	E2
2 Pls. 4"x⅜"	"	E7
1 Pl. 18"x⅞"	"	E2
1 Pl. 18"x⅞"	"	E3
1 Pl. 18"x⅞"	"	E4
1 Pl. 18"x⅞"	"	E5

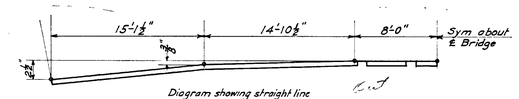

Diagram showing straight line adaptation of roadway crown for top of 1½ expansion joint plates.

GENERAL NOTES

MATERIAL – Structural carbon steel, copper bearing.
WELDING:– Welding shall be in accordance with the Specifications Of The American Welding Society For Highway And Railway Bridges, and with details and typical sections. Top plates of roadway expansion joints shall be machine flame cut. Finish ends.
Holes in beams of the end span for bolting down expansion joint sections shall be drilled in shop with joints properly assembled and match marked. Holes in beams of the center span for bolting down expansion joint sections, shall be drilled in the field with all mating units in place and set for clearance "C", increased or decreased from 1½" by amount dimension "X" varies from 1'-8" at time expansion plates are adjusted
All expansion joint sections shall be true to dimensions and free from warp and wind
Mating sections of sidewalk and roadway expansion joints shall be so placed as to produce a continuous smooth surface conforming to the sidewalk and roadway contours respectively.
Contractor shall furnish and install shims where required, to obtain such a surface

Scale of Tracing
1½" = 1'-0" 0 1 2 3 4 5 6 7 8 9 10
1" = 1'-0" 0 1 2 3 4 5

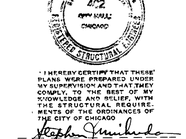

"I HEREBY CERTIFY THAT THESE PLANS WERE PREPARED UNDER MY SUPERVISION AND THAT THEY COMPLY, TO THE BEST OF MY KNOWLEDGE AND BELIEF, WITH THE STRUCTURAL REQUIREMENTS OF THE ORDINANCES OF THE CITY OF CHICAGO"

Correct O. N. Becker Jr. E.E. Asst. Bridge Engineer
Approved W. E. Lorenz Asst. City Bridge & Viaduct Engineer
Approved Stephen Gmuhda City Bridge & Viaduct Engineer
Approved W. J. Bauer City Engineer
Approved [illegible] Commissioner of Public Works

CITY OF CHICAGO
DEPARTMENT OF PUBLIC WORKS
BUREAU OF ENGINEERING
DIVISION OF BRIDGES AND VIADUCTS

WIDENING
OF
W. IRVING PARK ROAD FIXED BRIDGE
OVER THE
NORTH BRANCH---CHICAGO RIVER
SHOWING
EXPANSION AND CONSTRUCTION JOINTS

Scale As noted	September, 1944
Drawn by O.A. Kendall	DRWG 16221 SUPER (7) OF (9)
Traced by A. Hoeschke	
Checked by W.O.C.	
In Charge of A.E. Kohle	FILE No 11-6-0.35

LOCATION DIAGRAM

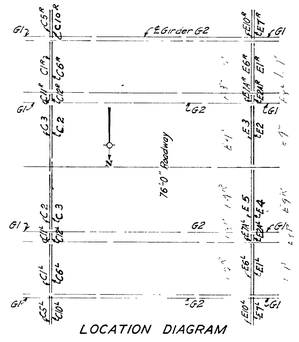

135 A Per 405 3434

1660820046

135 A Per 405

REVISIONS

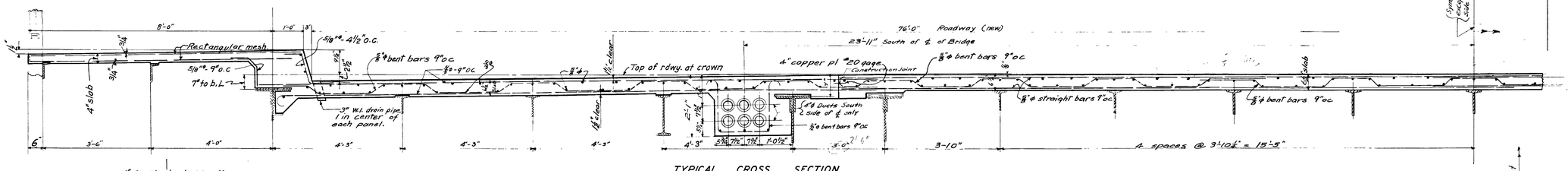

TYPICAL CROSS SECTION
Scale ⅜"=1'-0"
Section shown for cantilever end spans
Section for suspended span similar

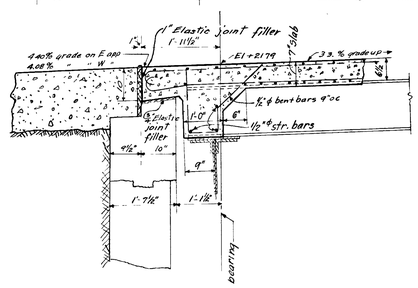

SECTION A-A
Scale ⅜"=1'-0"

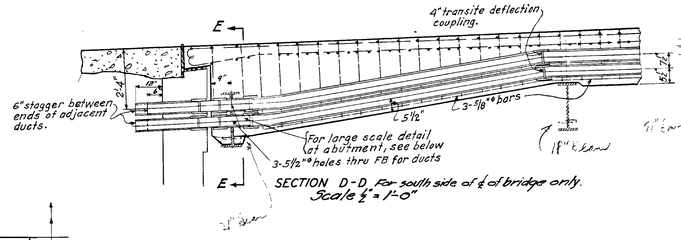

SECTION D-D For south side of ℄ of bridge only.
Scale ½"=1'-0"

SECTION E-E
Scale ½"=1'-0"

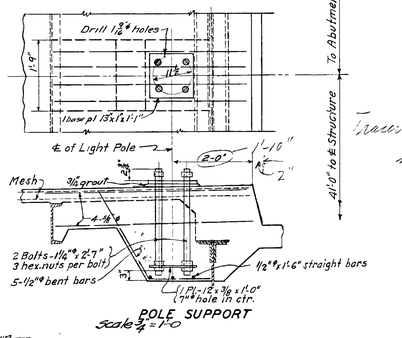

POLE SUPPORT
Scale ½"=1'-0"

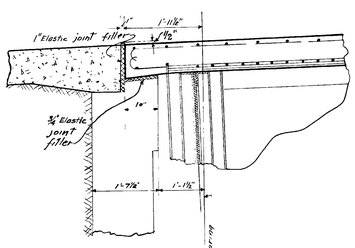

SECTION B-B
Scale ⅜"=1'-0"

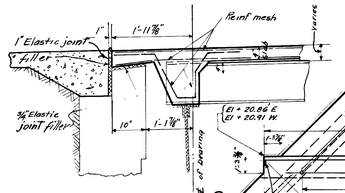

SECTION C-C
Scale ⅜"=1'-0"

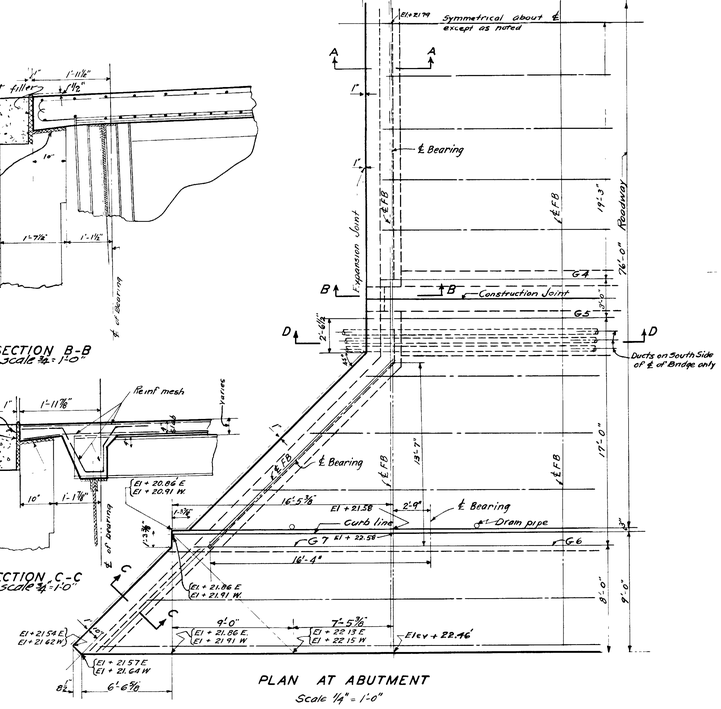

PLAN AT ABUTMENT
Scale 1¼"=1'-0"

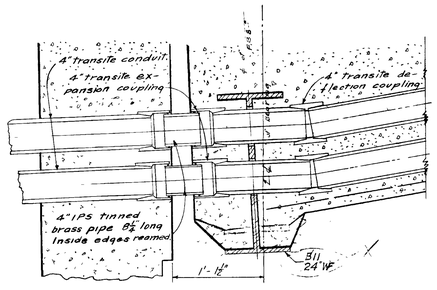

DETAIL OF EXPANSION JOINT AT ABUTMENT
Scale 1½"=1'-0"

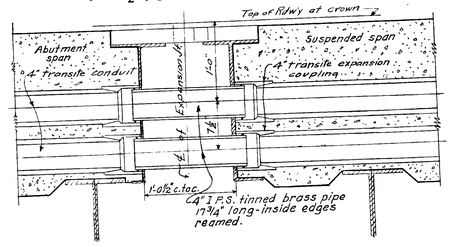

DETAIL OF EXPANSION JOINT (West End Suspended Span)
Scale 1½" = 1'-0"

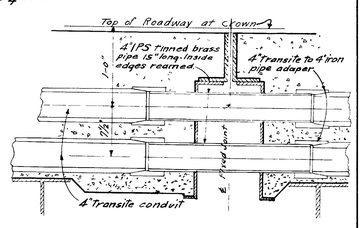

DETAIL OF FIXED JOINT (East End Suspended Span)
Scale 1½" = 1'-0"

NOTES-

For sidewalk slab use 4x12 mesh "4x4" wires At splices the meshes shall be tied together with #16 annealed iron wire with ties about 12" intervals at laps and splices, 4" side laps, 12" end laps, Main reinforcing to run at right angles to Stringers Wire mesh shall be cut to required lengths and straightened.

All ducts and appurtenances to be furnished and delivered by the Commonwealth Edison Co.

All ducts passing thru web of beams shall be spaced 7⅛" as shown with separate holes, 5⅛"ø for each duct.

For quality of material and other requirements of construction see specifications

All steel surfaces in contact with concrete to receive two coats of the specified damp-proofing.

Contractor shall furnish complete set of shop plans for reinforcement before commencing work.

Scale of Tracing

1/2" = 1'-0"
3/4" = 1'-0"

I HEREBY CERTIFY THAT THESE PLANS WERE PREPARED UNDER MY SUPERVISION AND THAT THEY CONFORM, TO THE BEST OF MY KNOWLEDGE AND BELIEF, WITH THE STRUCTURAL REQUIREMENTS OF THE ORDINANCES OF THE CITY OF CHICAGO.

Stephen Gmichuda

CITY OF CHICAGO
DEPARTMENT OF PUBLIC WORKS
BUREAU OF ENGINEERING
DIVISION OF BRIDGES AND VIADUCTS

Correct D. M. Becker/EER Asst Bridge Engineer
Approved J. E. Lofgren Asst City Bridge & Viaduct Engineer
Approved Stephen Gmichuda City Bridge & Viaduct Engineer
Approved [illegible] City Engineer
Approved [illegible] Commissioner of Public Works

WIDENING OF W. IRVING PARK ROAD FIXED BRIDGE OVER THE NORTH BRANCH---CHICAGO RIVER

SHOWING

CONCRETE SLABS AND REINFORCEMENT

Scale As noted	September, 1944
Drawn by A.L. Hess	DRWG. 16222 SUPER (8) OF (9)
Traced by L. Campo	
Checked by E.E. Becker	
In Charge of E.E. Becker	FILE No. 11-6-0-36

1660820047

135 A per 402

REVISIONS

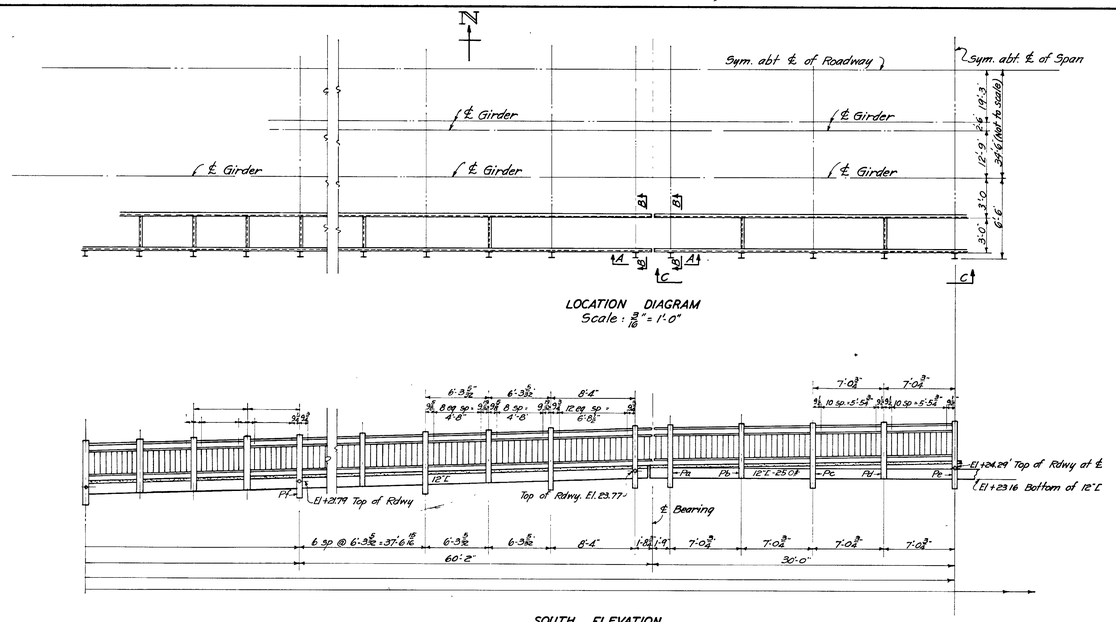

LOCATION DIAGRAM
Scale : $\frac{3}{16}$" = 1'-0"

SOUTH ELEVATION
Showing west half; east half opposite hand.
Scale $\frac{3}{16}$" = 1 Ft.
About 447' of Hand Railing required

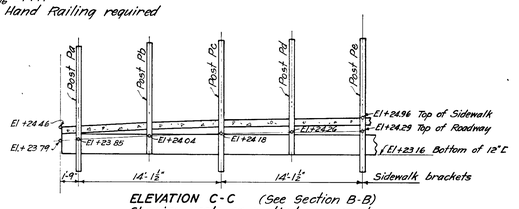

ELEVATION C-C (See Section B-B)
Showing posts on vertical curve grade
Scale: 1" = 1'-0" Horizontal
" = 1'-0" Vertical

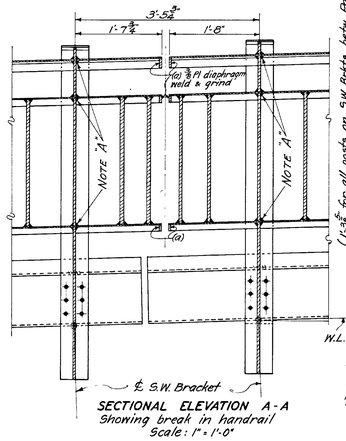

NOTE "A" - Slot web of post to conform with shape of railing channels. These channels are to be welded end to end beyond the web of post as shown and post by a continuous ⅜ fillet weld extending around channels

SECTIONAL ELEVATION A-A
Showing break in handrail
Scale: 1" = 1'-0"

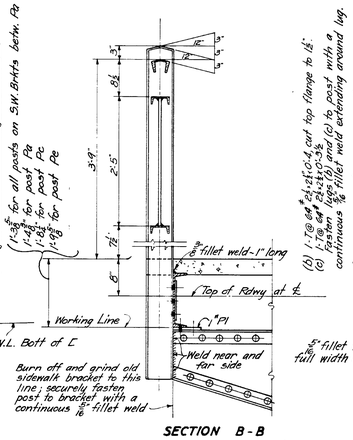

SECTION B-B
Showing typical post connection to sidewalk bracket
Scale: 1" = 1'-0".

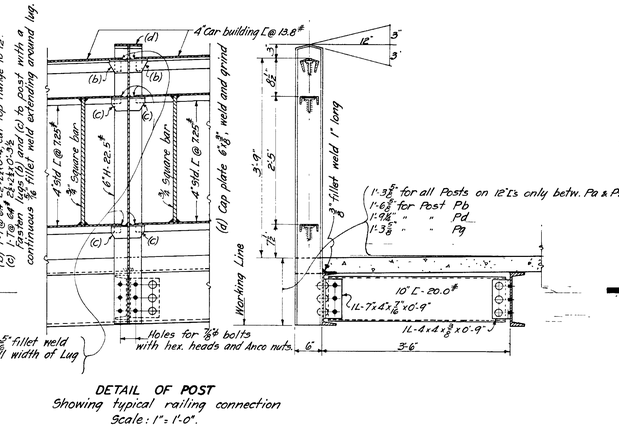

DETAIL OF POST
Showing typical railing connection
Scale: 1" = 1'-0".

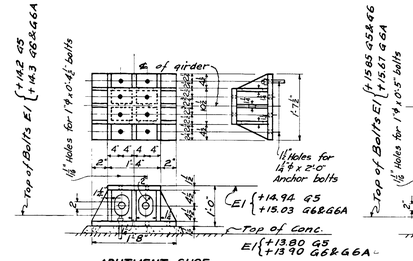

ABUTMENT SHOE
For G5,G6&G6A 8-Reqd.
Material - Cast or Welded Steel
Scale ¾"-1'-0"

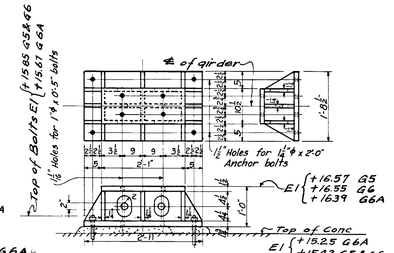

PIER SHOE
For G5,G6&G6A 8 Required
Material - Cast or Welded Steel
Scale ¾"-1'-0"

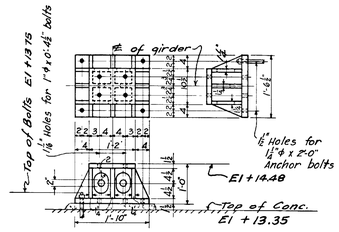

ABUTMENT SHOE
For G7 4-Reqd.
Material - Cast or Welded Steel
Scale ¾"-1'-0"

Note: Castings at River Pier for present girders Mk G4 to be reused
All anchor bolts for girder castings to be furnished and set by others.

NOTES
Material - Structural carbon steel.
Rivets - ⅞"ϕ
Open Holes - 15/16"ϕ except as noted
Welding - All welding shall be in accordance with the American Welding Society's specifications for Welded Highway and Railway Bridges.
All posts and railing pickets shall be vertical; railing channels shall be neatly secured to posts as shown.

Contractor shall take all necessary precaution to assure the correct alignment and elevation of posts and railings.
For quality of material, punching, reaming, welding, and other requirements of fabrication, see Specifications

Scale of Tracing

I HEREBY CERTIFY THAT THESE PLANS WERE PREPARED UNDER MY SUPERVISION AND THAT THEY COMPLY TO THE BEST OF MY KNOWLEDGE AND BELIEF, WITH THE STRUCTURAL REQUIREMENTS OF THE ORDINANCES OF THE CITY OF CHICAGO.

Correct D. M. Becker / J.E.P. Asst Bridge Engineer
Approved J.E. Hansen Asst City Bridge & Viaduct Engineer
Approved Stephen J. Gmichowski City Bridge & Viaduct Engineer
Approved [illegible] City Engineer
Approved [illegible] Commissioner of Public Works

CITY OF CHICAGO
DEPARTMENT OF PUBLIC WORKS
BUREAU OF ENGINEERING
DIVISION OF BRIDGES AND VIADUCTS

WIDENING
— OF —
W. IRVING PARK ROAD FIXED BRIDGE
OVER THE
NORTH BRANCH---CHICAGO RIVER
SHOWING
SIDEWALK HANDRAIL AND GIRDER SHOES

Scale As noted	September, 1944
Drawn by C. Neudahl	DRWG. 16223 SUPER (9) OF (9)
Traced by J.L. Dorman	
Checked by W.C. Gehrig	
In Charge of E.E. Ruddell	FILE No. 11-6-0-37

135A Per 401 - 3437

1660820048

135A Per 401

REVISIONS

SECTIONAL PLAN B-B

PLAN - MAIN EAST PIER

ELEVATION A-A

SECTION C-C

SECTION D-D

SECTION E-E

SECTION F-F

BILL OF REINFORCING BARS

Mark	Number	Size	Length	Type	Location: East Piers: Footg	East Piers: Stem	East Piers: Col	East Piers: Tie Bm	West Piers: Footg	West Piers: Stem	West Piers: Col	West Piers: Tie Bm	Bending: A	B	C	D
bb1	8	1"□	36'-8"	IV	4				4				28'-0"	0.3%		
2	8	"	29'-4"	IV	4				4				28'-6"	0.3%		
3	38	"	10'-10"	IV	16				16				8'-0"	0.3%		
4	12	"	14'-4"	IV				6				6	3'-5"	0.3%		
5	6	"	18'-8"	I				3				3	3'-0"	3'-0"	3'-0"	
6	10	"	10'-3"	IV	5				5				9'-5"	0.3%		
cs1	4	7/8"	7'-6"	Str	2				2							
2	10	"	8'-6"	I	6				4							
3	17	"	12'-0"	I	2				15							
4	4	"	14'-6"	I	2				2							
5	30	"	16'-6"	I		14				16						
6	6	"	18'-6"	I		6										
7	4	"	11'-6"	I	2				2							
8		"	11'-0"	I												
9	14	"	21'-0"	I		4				10						
10	14	"	26'-3"	I		7				7						
11	26	"	16'-0"	I		13				13						
12	158	"	20'-8"	I		80				78						
13	13	"	16'-6"	I		7				6						
14	12	"	27'-6"	I		6				6						
15	13	"	9'-0"	I		13										
16	3	"	10'-0"	I		1				1						
17	128	"	10'-5"	I		64				64						
18	128	"	24'-0"	I		64				64						
19	8	"	31'-0"	I		4				4						
cb1	24	3/4"	13'-0"	I	12				12				1'-6"	8'-6"	3'-0"	
2	13	"	19'-6"	II	6				7				4'-6"	6'-0"	8'-4"	2'-8"
3	56	"	12'-6"	I	29				27				2'-0"	8'-6"	8'-0"	
4	26	"	16'-6"	I	14				12				4'-0"	8'-6"	4'-0"	
5	40	"	17'-6"	I	20				20				1'-6"	16'-6"	1'-6"	
6	22	"	19'-6"	III	11				11				2'-8"	2'-8"	9'-0"	
7	20	"	20'-0"	I	10				10				2'-0"	16'-0"	2'-0"	
8	14	"	24'-0"	I	7				7				4'-0"	16'-0"	4'-0"	
9	8	"	27'-0"	I	4				4				5'-6"	16'-0"	5'-6"	
10	37	"	23'-0"	I	17				20				1'-6"	18'-6"	3'-0"	
11	18	"	28'-6"	II	9				9				4'-6"	16'-0"	3'-7"	2'-9"
12	56	"	16'-6"	I	28				28				3'-0"	17'-6"	5'-0"	
13	22	"	20'-6"	I	11				11				4'-0"	12'-6"	4'-0"	
14	16	"	15'-6"	I	16								2'-0"	11'-6"	2'-0"	
15	6	"	19'-6"	I	6								4'-0"	11'-6"	4'-0"	
16	4	"	30'-8"	IV	4								28'-6"	0.3%		
17	18	"	29'-4"	IV	6				12				26'-6"	0.3%		
18	13	"	28'-6"	IV	7				6				25'-6"	0.3%		
19	2	"	17'-0"	V	1				1				10'-7"	0.3%		
20	2	"	16'-6"	V	1				1				15'-1"	0.3%		
21	2	"	20'-6"	V	1				1				19'-1"	0.3%		
22	2	"	23'-0"	V	1				1				23'-7"	0.3%		
23	62	"	15'-6"	I	30				12	20			3'-0"	6'-6"	3'-0"	
24	4	"	11'-3"	I	2				2				3'-0"	5'-3"	3'-0"	
25	4	"	9'-6"	I	2				2				3'-0"	3'-6"	3'-0"	
26	24	"	30'-6"	VI	12				12				28'-0"	6'-6"		
27	34	"	16'-3"	VII	18				18				3'-6"	3'-3"		
28	28	"	10'-6"	I	14				14				3'-6"	3'-6"	3'-6"	
29	9	"	34'-6"	VI	9								28'-0"	6'-6"		
30	12	"	19'-6"	VI	6				6				18'-0"	6'-6"		
31	6	"	14'-0"	VI	3				3				5'-6"	6'-6"		
32	4	"	27'-10"	VIII	4								18'-6"	3'-3"	0'-8"	
33	14	"	15'-6"	I	7				7				3'-0"	10'-6"	3'-0"	
34	20	"	9'-0"	VI	10				10				2'-0"	3'-6"		
35	10	"	19'-6"	I	5				5				6'-6"	6'-6"	6'-0"	
36	10	"	16'-6"	I	5				5				5'-6"	6'-6"	6'-6"	
37	10	"	16'-6"	I									1'-6"	11'-6"	1'-6"	
38	5	"	17'-9"	III					5				5'-7"	11'-6"	8'-9"	
39	1	"	16'-0"	I					1				3'-0"	10'-6"	3'-0"	
40	10	"	13'-10"	IV					10				11'-0"	0.3%		
41	9	"	35'-0"	VI						9			26'-0"	6'-0"		
42	4	"	23'-6"	VIII						4			18'-6"	3'-3"	0'-9"	
43	44	"	16'-6"	XI			22				22		5'-6"	4'-6"		
44	4	"	14'-8"	I	2				2				3'-0"	8'-6"	3'-0"	
45	4	"	23'-0"	I	2				2				3'-0"	17'-0"	3'-0"	
db1	36	1"ø	12'-5"	IX		18				18			1'-7"			
2	72	"	12'-5"	VII		36				36			3'-9"	7'-7"		
3	8	"	12'-5"	X		4				4			Circular Spiral			
4	12	"	14'-0"	X		6				6			Oval Spiral			

TYPES OF BENT BARS

I - II - III - IV - V - VI - VII - VIII - IX - X - XI - XII

DETAIL OF ANCHOR BOLTS

1¼"ø x 2'-0" Anchor Bolts
3-Hex nuts & 1-6"x 6"x ⅝" Washer each rod.
48-Req'd. Mark ABI for Main Piers
48-Req'd Mark ABI for Abutments, Pilasters & Piers.
96-Req'd. Mark ABI (Total for Job)
(Included in Substructure Contract)

1⅛" Hole
6"x 6"x ⅝" Washer

I HEREBY CERTIFY THAT THESE PLANS WERE PREPARED UNDER MY SUPERVISION AND THAT THEY COMPLY, TO THE BEST OF MY KNOWLEDGE AND BELIEF, WITH THE STRUCTURAL REQUIREMENTS OF THE ORDINANCES OF THE CITY OF CHICAGO.
Stephen Spindelow 7/4/43

STATE OF ILLINOIS — REGISTERED STRUCTURAL ENGINEER — 402 CITY HALL CHICAGO

Correct Donald M. Baldwin 7/4/43 Asst Bridge Engineer
Approved W.E. Hoffmann Asst City Bridge & Viaduct Engineer
Approved Stephen Spindelow City Bridge & Viaduct Engineer
Approved M.J. Boland City Engineer
Approved C.G. Stevens Commissioner of Public Works

CITY OF CHICAGO
DEPARTMENT OF PUBLIC WORKS
BUREAU OF ENGINEERING
DIVISION OF BRIDGES AND VIADUCTS

WIDENING OF W. IRVING PARK ROAD FIXED BRIDGE OVER THE NORTH BRANCH---CHICAGO RIVER

SHOWING

MAIN PIERS—PART II

Scale	December, 1947
Drawn by J. Yaeger	DRWG. 16411
Traced by A. L.	
Checked by [illegible]	FILE No. 1-6-0-38
In Charge of [illegible]	SUB. 3 OF 5

1660820049

3411-135 A Per 205

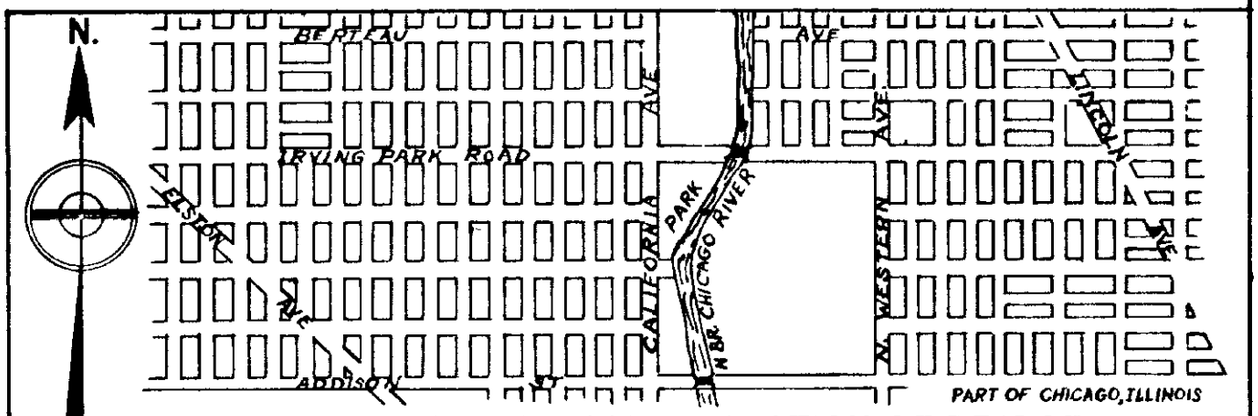

GENERAL MAP SHOWING LOCATION OF BRIDGE

From Kirks Map of Chg'o

SCALE IN MILES 0 1/4 1/2 3/4 1

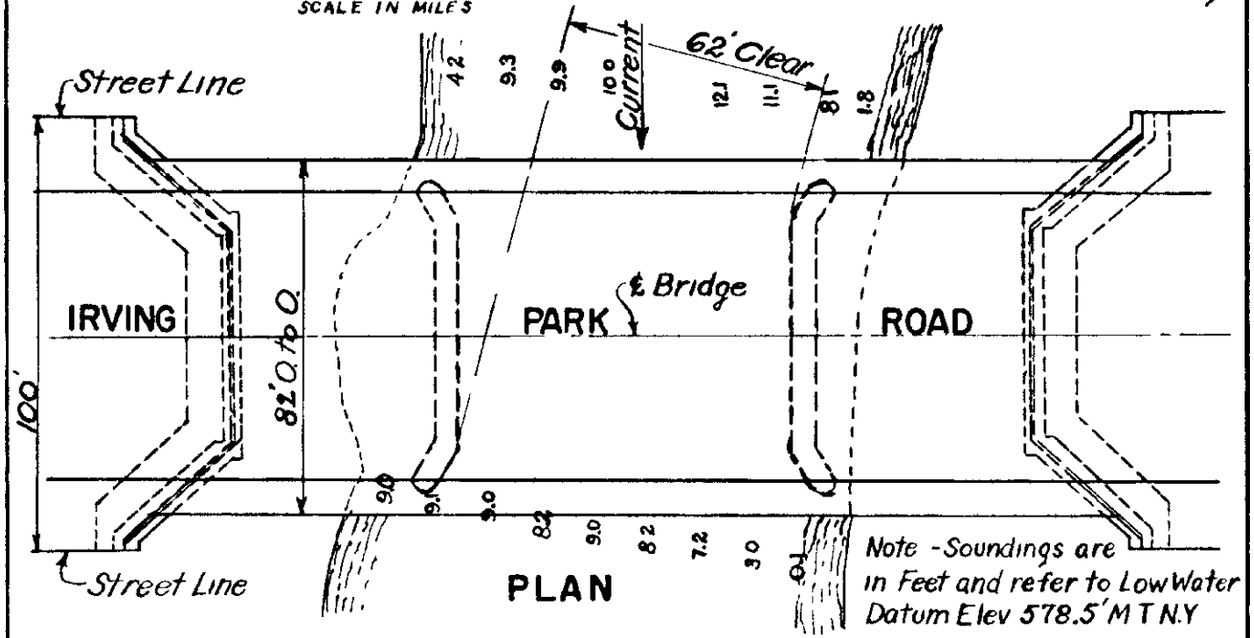

PLAN

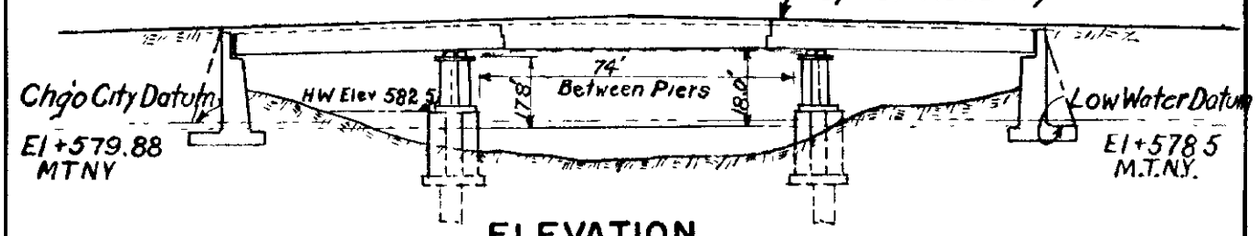

ELEVATION

SCALE IN FEET 40 30 20 10 0 40

Correct G A Steinwich ASST. BRIDGE ENGINEER

Approved W E Johnson ASST CITY BRIDGE & VIADUCT ENGR

Approved Stephen Pinchuda CITY BRIDGE & VIADUCT ENGR

Approved Walter Druecker CITY ENGINEER

Approved [illegible] COMMISSIONER of PUBLIC Wks

CITY OF CHICAGO
DEPARTMENT OF PUBLIC WORKS
BUREAU OF ENGINEERING
THE DIVISION OF BRIDGES & VIADUCTS

PROPOSED WIDENING OF IRVING PK.RD BRIDGE OVER NORTH BRANCH OF CHICAGO RIVER

16608200 50

FEB 3, 1949

Drawing File 16877
14 - D1 - 1899

135A Per 4.

REVISIONS

BILL OF REINFORCING FOR 4 PIERS

MARK	NUMBER	SIZE	LENGTH	TYPE	LOCATION: SUB-PIER	LOCATION: MAIN BEAM	LOCATION: COLUMN	BENDING: A	BENDING: B	BENDING: C
asl	96	1¼"	27-6	Str	96					
csl	48	⅞"	21-0	Str		48				
cb1	80	⅞"	8-9	I	80			3-8		
2	24	-	19-7	III		24		7-3	5-1	7-3
3	24	-	15-1	III		24		4-0	5-1	4-0
4	36	-	15-4	IV		36		11-0		
5	36	-	13-6	V		36		10-0		
6	36	-	13-11	VI		36		5-0	5-6	
7	8	-	20-0	III		8		4-0	12-0	4-0
8	8	-	27-0	III		8		7-3	12-6	7-3
dbl	44	⅞"	12-2	II			44	3-3		
2	8		32-6				8	Circular Spiral		

TYPES OF BENT BARS

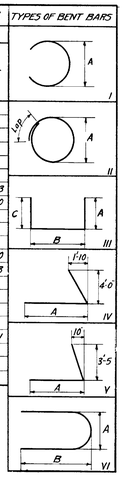

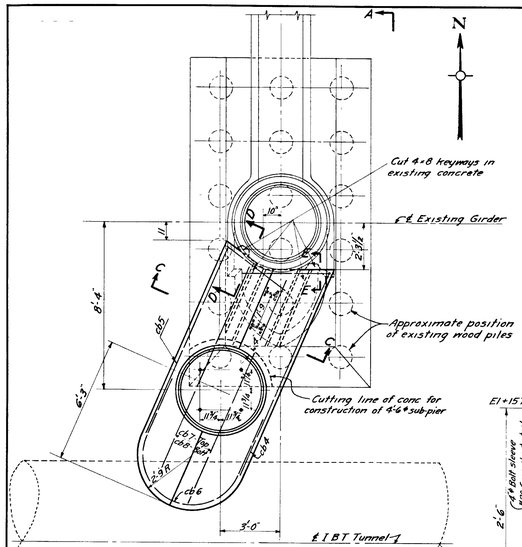

PLAN S.W. MAIN PIER
Scale ⅜" = 1'-0"

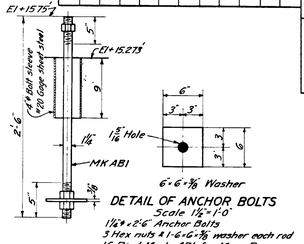

DETAIL OF ANCHOR BOLTS
Scale 1½" = 1'-0"
1⅞" x 2'-6" Anchor Bolts
3 Hex nuts & 1-6"x6"x⅞" washer each rod
16 Regd Mark ABI for Main Piers
(Included in Substructure Contract)

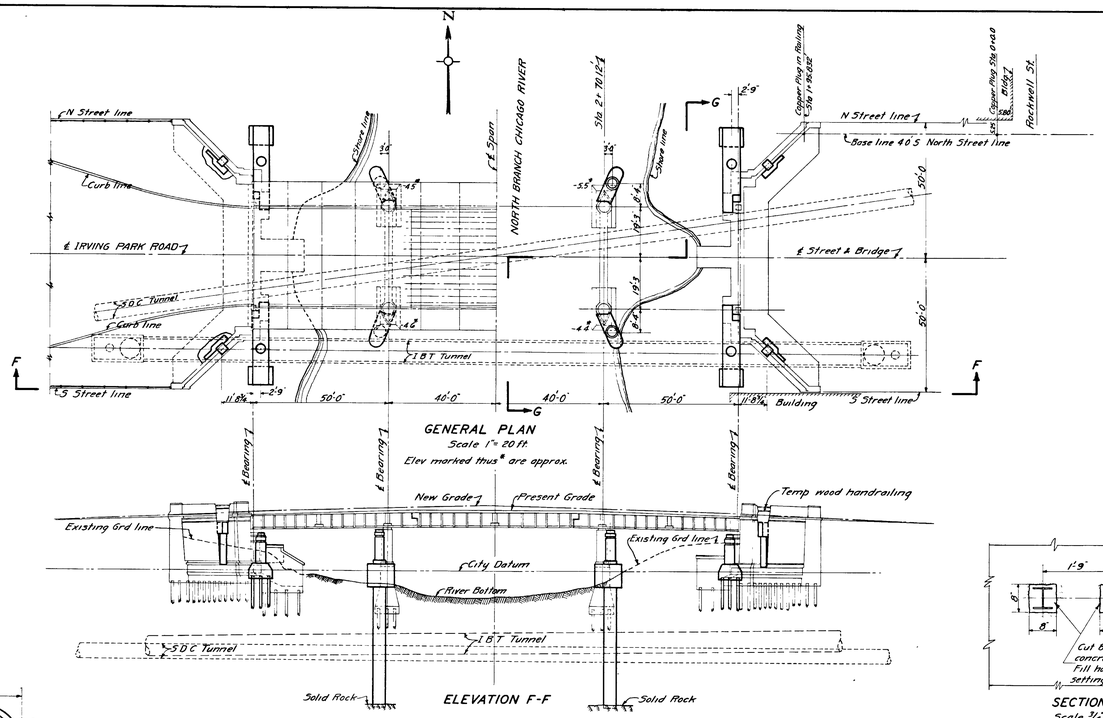

GENERAL PLAN
Scale 1" = 20 ft.
Elev marked thus* are approx.

ELEVATION F-F

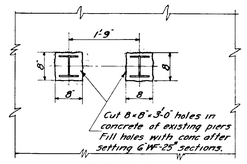

SECTION J-J
Scale ⅜" = 1'-0"

SECTION B-B

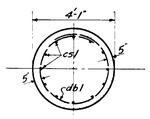

SECTION H-H

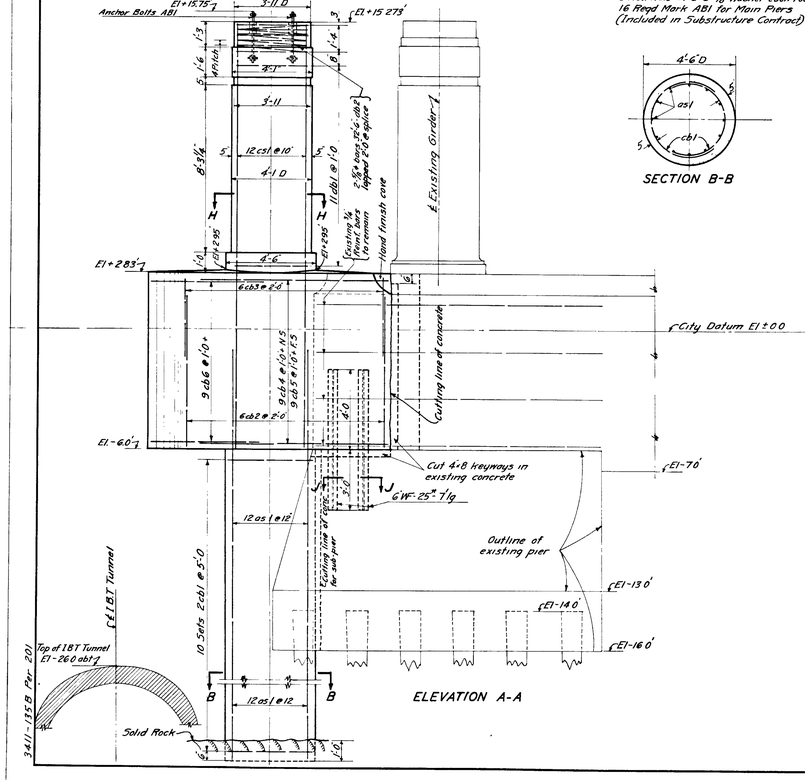

ELEVATION A-A

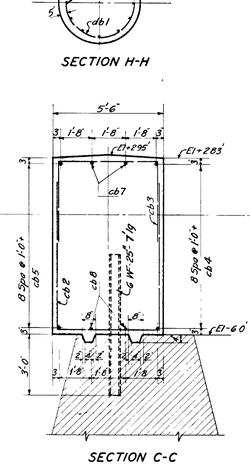

SECTION C-C

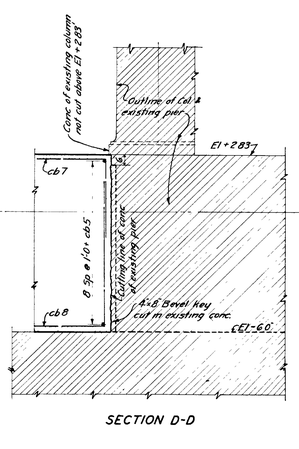

SECTION D-D

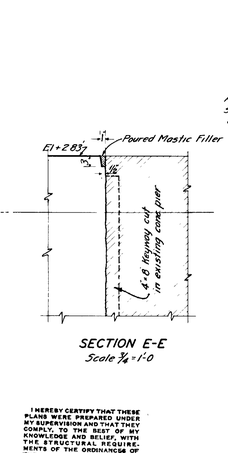

SECTION E-E
Scale ¾" = 1'-0

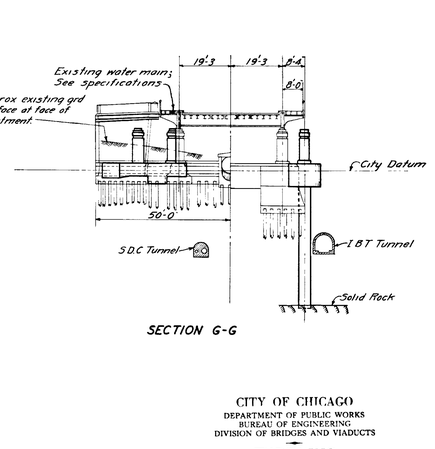

SECTION G-G

I HEREBY CERTIFY THAT THESE PLANS WERE PREPARED UNDER MY SUPERVISION AND THAT THEY COMPLY TO THE BEST OF MY KNOWLEDGE AND BELIEF WITH THE STRUCTURAL REQUIREMENTS OF THE ORDINANCES OF THE CITY OF CHICAGO.
Stephen J. Michuda

STATE OF ILLINOIS · STEPHEN A. SCHIRO · 1001 · CITY HALL · CHICAGO · REGISTERED STRUCTURAL ENGINEER

Sheets 1 & 2 of this Contract hereby are approved.

Correct ..... A. A. Kinnick 5-17-49
Assistant Bridge Engineer—Design
Approved ..... M. E. Fagan
Assistant City Bridge and Viaduct Engineer
Approved ..... Stephen J. Michuda
City Bridge and Viaduct Engineer
Approved ..... W. D. Kruse
City Engineer
Commissioner of Public Works

CITY OF CHICAGO
DEPARTMENT OF PUBLIC WORKS
BUREAU OF ENGINEERING
DIVISION OF BRIDGES AND VIADUCTS

WIDENING
OF
W. IRVING PARK ROAD FIXED BRIDGE
OVER THE
NORTH BRANCH---CHICAGO RIVER
SUBSTRUCTURE

ALTERATIONS & ADDITIONS TO MAIN PIERS

Scale As Noted	May, 1949
Drawn by J. Stage	DRWG. 16892
Traced by A. Level	
Checked by [illegible]	FILE No 11-6-0.35
In Charge of [illegible]	

1 OF 2

1660820051

3411-135 B Per 201

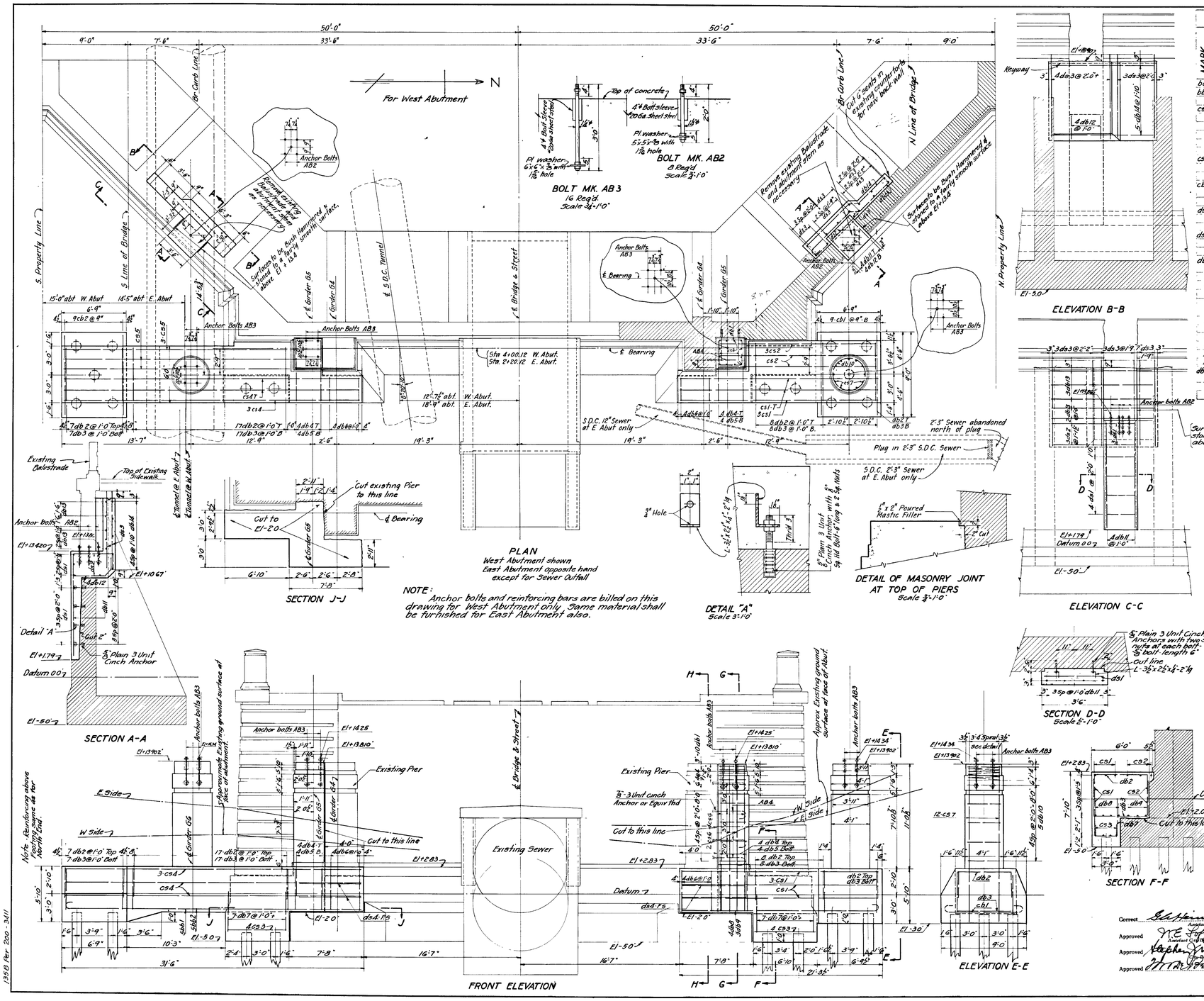

BILL OF REINFORCING-W. ABUTMENT BENT BARS

MARK	NUMBER	SIZE	LENGTH	TYPE	LOCATION: FOOTING	STRAP	PIERS	BACKWALL	BENDING: A	B	C	D
bb1	5	1"	32'-1"	I		5			0'-8"	31'-0"		
bb2	5	"	29'-1"	I		5			0'-8"	27'-0"		
cs1	5	7/8"	20'-9"	str		5						
2	5	"	16'-9"	"		5						
3	8	"	6'-4"	"	8							
4	5	"	31'-0"	"		5						
5	5	"	27'-0"	"		5						
6	24	"	15'-6"	"			24					
cs7	24	"	16'-6"	"			24					
cb1	18	7/8"	10'-2"	II	18				0'-7"	8'-6"		
ds1	14	5/8"	3'-0"	str			14					
2	6	"	11'-0"	"				6				
3	32	"	8'-3"	"				32				
ds4	4	"	6'-9"	"		4						
db1	20	5/8"	12'-0"	IV			20		0'-2"	2'-8"	2'-8"	
2	33	"	11'-2"	III	33					2'-9"	5'-8"	2'-9"
3	33	"	13'-8"	III	33					4'-0"	5'-8"	4'-0"
4	8	"	11'-9"	III		8				2'-9"	6'-3"	2'-9"
5	8	"	14'-3"	III		8				4'-0"	6'-3"	4'-0"
6	8	"	14'-0"	IV		8			0'-2"	2'-6"	4'-4"	
7	14	"	10'-6"	III	14					4'-0"	2'-6"	4'-0"
8	4	"	21'-4"	I		4			0'-5"	20'-9"		
9	3	"	17'-4"	I		3			0'-5"	16'-9"		
10	10	"	12'-6"	V			10		3'-4"			
11	8	"	16'-6"	III			8			10'-9"	4'-1"	1'-8"
12	8	"	5'-6"	VII			8			3'-0"	1'-0"	1'-6"
13	10	"	11'-8"	VIII				10	0'-5"	5'-10"	1'-0"	4'-3"
db14	10	"	11'-0"	VI				10		6'-3"	1'-0"	3'-9"
4	1/2"	27'-0"	Spiral (See detail)									

REVISIONS

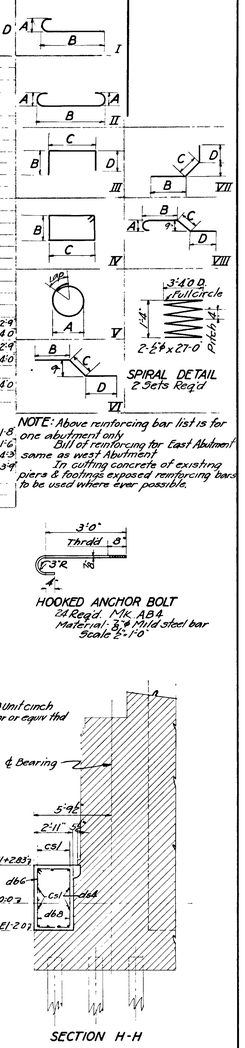

NOTE: Above reinforcing bar list is for one abutment only. Bill of reinforcing for East Abutment same as west Abutment. In cutting concrete of existing piers & footings exposed reinforcing bars to be used where ever possible.

STATE OF ILLINOIS
STEPHEN J. MICHUDA
1001
CITY HALL
CHICAGO
REGISTERED STRUCTURAL ENGINEER

CITY OF CHICAGO
DEPARTMENT OF PUBLIC WORKS
BUREAU OF ENGINEERING
DIVISION OF BRIDGES AND VIADUCTS

WIDENING
OF
W. IRVING PARK ROAD FIXED BRIDGE
OVER THE
NORTH BRANCH---CHICAGO RIVER
SUBSTRUCTURE
ALTERATIONS & ADDITIONS TO ABUTMENTS
STAGE I

Correct G. A. Heinrich 5-17-49
Assistant Bridge Engineer—Design
Approved W. E. Fofrau
Assistant City Bridge and Viaduct Engineer
Approved Stephen J. Michuda
City Bridge and Viaduct Engineer
Approved W. W. Freund
City Engineer

Scale 1/4"=1'-0" & As Noted	May, 1949
Drawn by [illegible]	DRWG. 16893
Traced by [illegible]	FILE No. 11-6-0-40
Checked by [illegible]	
In Charge of [illegible]	

(2) OF (2)

1358 Per 200-3411

1660820052

1358 Per 200

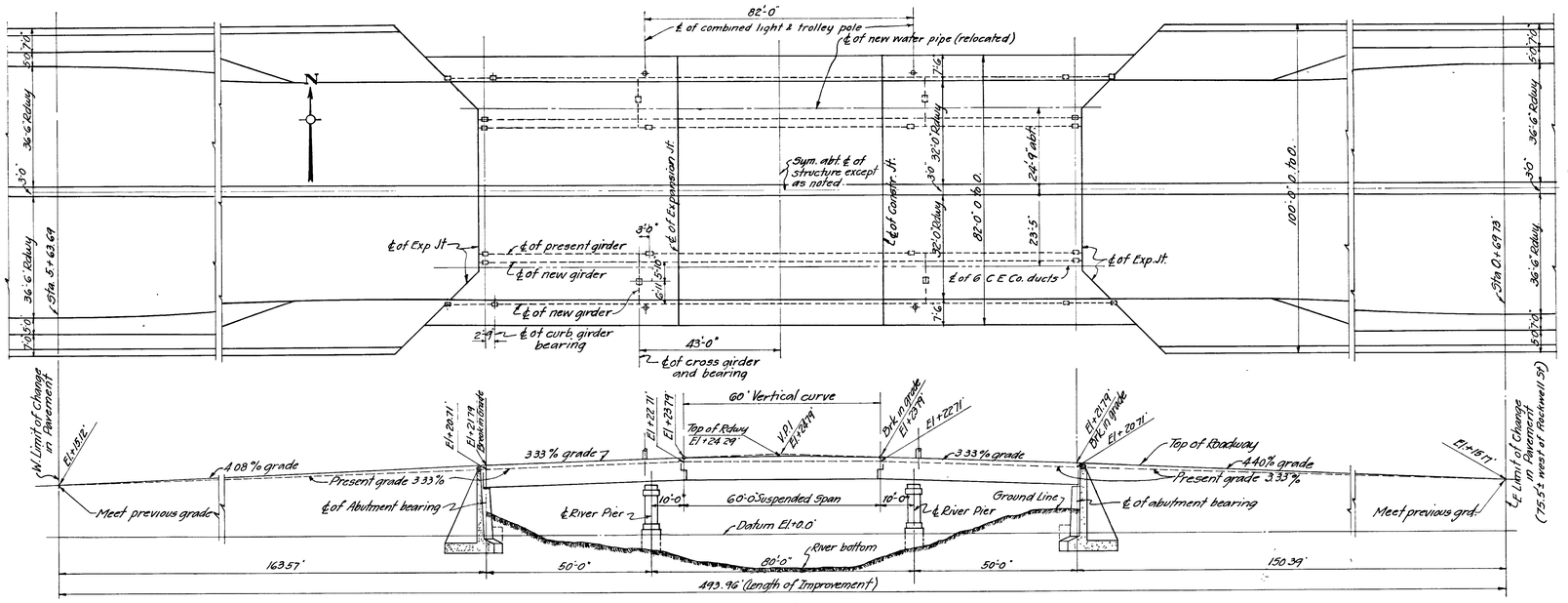

LONGITUDINAL SECTION ON ℄ OF ROADWAY
Scale 1/16"-1'-0"

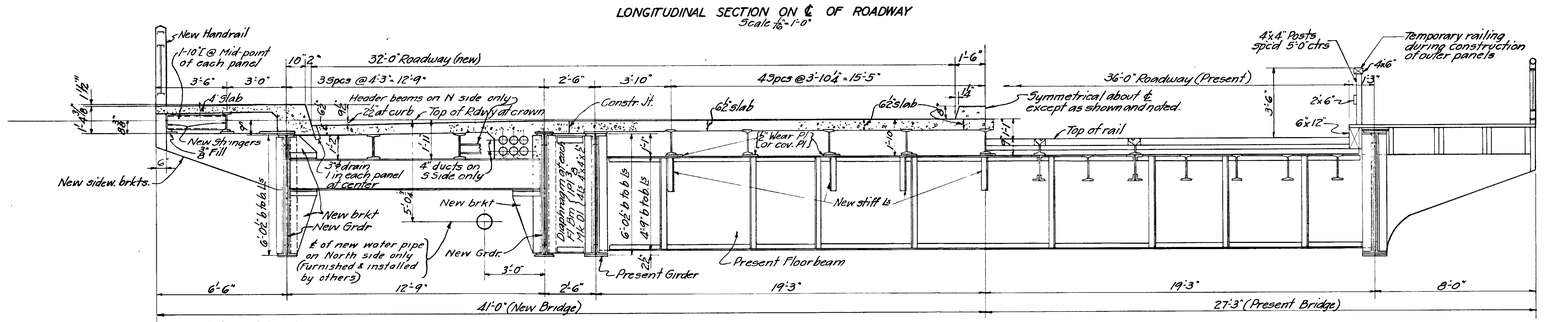

HALF SECTION - PROPOSED BRIDGE - END SPAN
Scale ⅜"-1'-0"
Note - All roadway and sidewalk stringers and all sidewalk brackets are new.

HALF SECTION - PRESENT STRUCTURE
Scale ⅜"-1'-0"

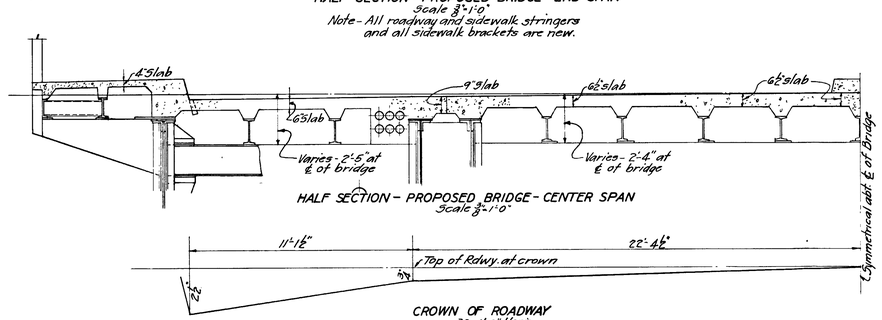

HALF SECTION - PROPOSED BRIDGE - CENTER SPAN
Scale ⅜"-1'-0"

CROWN OF ROADWAY
Scale ⅜"-1'-0" Horiz.
6"-1'-0" Vert.

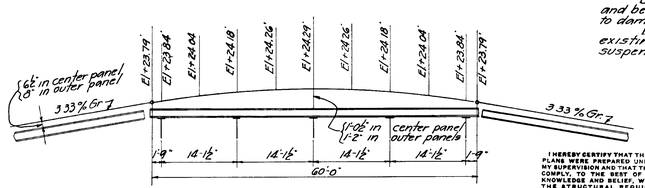

DIAGRAM SHOWING TOP OF ROADWAY AT CROWN

NOTE:
Although the expansion provisions are shown to be at the west end of the central span, this and the opposite Joint shall be reversed if so ordered, dependent upon the manner in which the sliding Joints of the existing girders are found to be functioning.

CONDITIONS OF LOADING

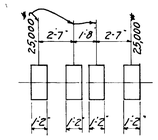

50 TON TRAILER TRUCK
One line of Wheels as shown.
No impact
Trailer passage is to be confined to center 20 ft section of bridge
No other L.L shall be on the center section of the structure during passage of this load and allowable stresses may be increased 50%

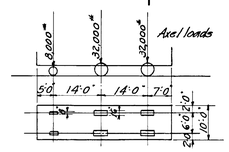

H20-S16 TRUCK

UNIFORM LIVE LOADS
Roadway - 100# per sq ft.
Sidewalk - 100# " " "

APPLICATION OF LOADS

The loading used in the design consist of as many full 10 foot units on each side of the center line of structure, with each unit faced in its proper traffic direction, as can be placed for the member under consideration. The remaining contributing roadway areas in front and back of the units is covered with the specified uniform load with the specified unit loads on contributing sidewalk areas or the special 50 ton trailer truck shall be used in the design under conditions as noted.

One loading unit consists of one H20-S16 Truck, and are placed abreast only

Impacts used are based on the following formula:

$$I = \frac{A}{n+2}\left(\frac{L+250}{3L+500}\right)$$

where n - coefficient based on loaded width
L - length of structure loaded (longitudinal)
Dead loads - Concrete slabs on roadway and sidewalk as shown.

NOTE:
For construction program and maintenance of traffic, see specifications.
Present Material:
Present floorbeams at abutments to be replaced by new floorbeams. Other present floorbeams to be reinforced as shown and to remain in place.
Present girders to remain in place. Existing sidewalk brackets to be removed and new diaphragms added. Present rail and roadway stringers shall be removed.
Alterations and changes must, of course, match present steel details. For this purpose, prints of the design and shop drawings of the present structure are available to the Contractor at the office of the Division of Bridges and Viaducts.
Ducts - All transite ducts and fittings, and all expansion and construction Joint material pertaining to ducts, to be furnished by the Commonwealth Edison Co. and placed by Contractor.
Water pipe - Present 8"ø water pipe to be removed and new 8"ø water pipe installed by the Water Pipe Extension Division of the city.
Light Poles:- Type A3F9'-28'-4 Regid. Poles to be furnished and set by the C.T.A. Anchor bolts and setting plates to be furnished and set by this Contractor, and poles painted.
Bottom Lateral Bracing - Present bracing to remain in place and be reconnected where necessary. Care shall be taken not to damage if during reconstruction.
Existing suspended span girders to be welded to existing approach span girders at connecting bolts on suspended girder seat at construction Joint (East end).

I HEREBY CERTIFY THAT THESE PLANS WERE PREPARED UNDER MY SUPERVISION AND THAT THEY COMPLY, TO THE BEST OF MY KNOWLEDGE AND BELIEF, WITH THE STRUCTURAL REQUIREMENTS OF THE ORDINANCES OF THE CITY OF CHICAGO

STATE OF ILLINOIS — REGISTERED STRUCTURAL ENGINEER — 1001 CITY HALL CHICAGO

Correct ..... Assistant Bridge Engineer—Design — 5-20-49
Approved ..... Engineer and Viaduct Engineer
Approved ..... City Engineer and Viaduct Engineer
Approved ..... City Engineer
Sheets 1 to 8 of this Contract hereby are approved. ..... Commissioner of Public Works

CITY OF CHICAGO
DEPARTMENT OF PUBLIC WORKS
BUREAU OF ENGINEERING
DIVISION OF BRIDGES AND VIADUCTS

WIDENING
OF
W. IRVING PARK ROAD FIXED BRIDGE
OVER THE
NORTH BRANCH---CHICAGO RIVER
SUPERSTRUCTURE AND APPROACHES
GENERAL PLAN AND SECTIONS

Scale. 1/16 & ⅜ = 1'-0"	June, 1949
Drawn by J. Hass Traced by J. McGrath Checked by J. E. Nolte In Charge of J. E. Nolte	DRWG. 16947 FILE No. 11-6-0-41

1 OF 8

REVISIONS
Note expansion Joint added. C.A.S. 6-15-49
Welded stiff bars changed to stiff. angles. D.G.W. 9-21-49

135 B Per 403 - 3430

1660820053

135 B Per 403

REVISIONS
Minor changes in grades & cap. 7-19-50 M.D.K.

Note: Reinforcing in this wing same as for opposite wing

PLAN
Scale 1/4"-1'-0"

ELEVATION H-H

PLAN
DUCTS AT ABUTMENT STEM
Scale 1/2"-1'-0"

ELEVATION F-F

SECTION G-G

FRONT ELEVATION
Scale 1/4"-1'-0"

SECTION A-A
Scale 1/2"-1'-0"

SECTION B-B
Scale 1/2"-1'-0"

SECTION C-C
Scale 1/2"-1'-0"

SECTION D-D
Scale 1/2"-1'-0"

SECTION E-E
Scale 1/2"-1'-0"

BILL OF REINFORCING - WEST ABUTMENT

MARK	NUMBER	SIZE	LENGTH	TYPE	STEM	LOCATION BENDING A	B	C	D	BENT BARS
db1	10	#8*	22'0	Sft	10					
db2	4	"	20'	-	4					
3	4	"	7'0	-	4					
4	12	"	11'0	-	12					
5	4	"	16'0	-	4					
db1	47	#8*	3'8	I	47	1'7	0'6	1'7		
2	47	"	2'5	II	47	1'3	1'2			
3	3	"	1'2	I	3	3'4	0'6	3'4		
4	3	"	4'3	II	3	1'3	3'0			
5	3	"	5'0	I	3	12'-1'	0'10	2'-1'		
6	4	"	8'1	III	4	0'5	7'6			
7	4	"	12'9	IV	4	2'3	9'7	3'2	2'3	
8	8	"	37'3	IV	8	2'3	34'1	3'2	2'3	
9	4	"	11'2	V	4	2'0	3'0	5'4	2'10	
10	2	"	3'6	II	2	1'9	1'9			
11	2	"	6'0	II	2	3'0	3'0			
12	24	"	2'4	II	24	1'3	1'1			
13	40	"	3'6	I	40	1'6	0'6	1'6		
14	22	"	3'4	I	22	2'4	0'6	0'6		
15	40	"	4'7	I	40	1'8	1'3	1'8		
16	4	"	2'4	II	4	1'9	0'7			
17	4	"	2'8	I	4	0'10	1'0	0'10		
18	10	"	4'3	I	10	1'5	1'6	1'5		
19	10	"	8'6	IV	10	1'6	6'6	2'0	1'6	

NOTE: Above reinforcing bar list is for one abutment only.
Bill of reinforcing for East abutment same as West abutment
In cutting existing concrete exposed reinforcing bars to be used where ever possible

STATE OF ILLINOIS
ROPHER J. KOTOUN
1001
CITY HALL
CHICAGO
REGISTERED STRUCTURAL ENGINEER

CITY OF CHICAGO
DEPARTMENT OF PUBLIC WORKS
BUREAU OF ENGINEERING
DIVISION OF BRIDGES AND VIADUCTS

WIDENING
OF
W. IRVING PARK ROAD FIXED BRIDGE
OVER THE
NORTH BRANCH---CHICAGO RIVER
SUPERSTRUCTURE AND APPROACHES
ALTERATIONS & ADDITIONS TO ABUTMENTS
STAGE II

Correct [illegible] 5-20-49
Assistant Bridge Engineer—Design
Approved [illegible]
Assistant City Bridge and Viaduct Engineer
Approved [illegible]
City Structural Viaduct Engineer
Approved [illegible]
City Engineer

Scale As noted.	June, 1949
Drawn by [illegible]	DRWG 16948
Traced by [illegible]	
Checked by [illegible]	
In Charge of [illegible]	FILE No. 11-6-0-42

2 OF 8

1358 Per 406 - 3411

1660820054

1358 Per 406

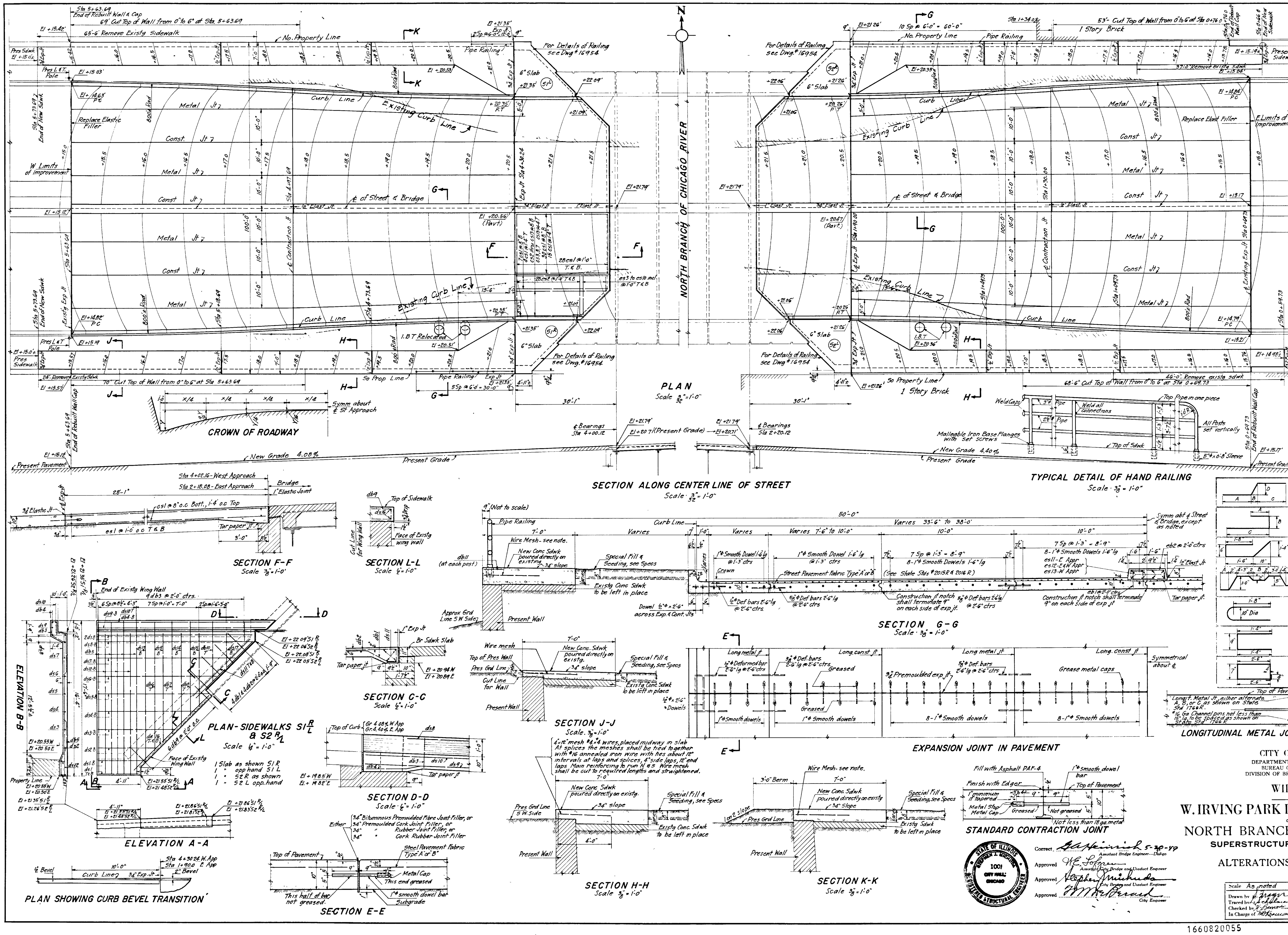

REVISIONS										

BILL OF REINFORCING

Mark	Number	Size	Length	Type	Sdwk & Pavt	Ret Walls	BENDING A	B	C	D
cs1	224	7/8"φ	27'-9"	Strt	224					
2	4	"	27-6	"	4					
3	8	"	27-0	"	8					
4	4	"	26-6	"	4					
5	8	"	25-9	"	8					
6	4	"	25-0	"	4					
7	8	"	24-3	"	8					
8	4	"	23-6	"	4					
9	8	"	22-9	"	8					
10	4	"	22-0	"	4					
11	8	"	21-3	"	8					
12	4	"	20-6	"	4					
13	8	"	19-9	"	8					
ds1	12	5/8"φ	4'-9"	Strt	12					
2	4	"	6-6	"	4					
3	4	"	8-9	"	4					
4	4	"	10-9	"	4					
5	8	"	12-6	"	8					
6	4	"	13-3	"	4					
7	4	"	15-3	"	4					
8	12	"	17-3	"	12					
9	4	"	18-9	"	4					
10	4	"	19-6	"	4					
11	16	"	9-0	"	16					
12	12	"	16-0	"	12					
13	4	"	14-6	"	4					
14	4	"	10-6	"	4					
15	4	"	8-6	"	4					
16	8	"	12-0	"	8					
17	4	"	4-0	"	4					
db1	16	5/8"φ	3'-0"	I	16		0'-6"	1'-0"	1'-4"	0'-7"
2	16	"	4-0	II	16		0-7	0-7	2-10	
3	36	"	5-3	III	36		(See Detail)			
4	4	"	19-3	I	4		2-3	0-9	16-2	0-3
5	16	"	17-8	IV	16		1-0	5-0	1-6	
6	4	"	13-10	I	4		0	0-3	12-6	1-4
7	4	"	12-8	I	4		0	0-3	11-3	1-4
8	4	"	10-7	I	4		0	0-3	9-3	1-4
9	24	"	4-6	II	24		2-0	0-6	2-0	
10	4	"	6-7	I	4		0	0-3	5-3	1-4
11	21	"	4-8	V		21	(See Detail)			
es1	224	1/2"φ	14'-9"	Strt	224					
2	160	"	12-2	"	160					
3	8	"	12-0	"	8					
4	8	"	11-0	"	8					
5	8	"	10-0	"	8					
6	8	"	9-0	"	8					
7	8	"	8-0	"	8					
8	8	"	7-0	"	8					
9	8	"	6-0	"	8					
10	8	"	5-0	"	8					
11	32	"	30-6	"	32	(E Approach)				
12	16	"	27-6	"	16	(E & W Approaches)				
13	32	"	34-0	"	32	(W Approach)				
eb1	157	1/2"φ	3'-5"	VI	157	See Det (Center Ist Dowl)				
2	157		6-10	VII	157	See Detail				

CITY OF CHICAGO
DEPARTMENT OF PUBLIC WORKS
BUREAU OF ENGINEERING
DIVISION OF BRIDGES AND VIADUCTS

WIDENING
OF
W. IRVING PARK ROAD FIXED BRIDGE
OVER THE
NORTH BRANCH---CHICAGO RIVER
SUPERSTRUCTURE AND APPROACHES
ALTERATIONS TO APPROACHES

STATE OF ILLINOIS — STEPHEN J. MICHUDA — 1001 CITY HALL, CHICAGO — REGISTERED STRUCTURAL ENGINEER

Correct G.A. Heinrich 5-30-49 Assistant Bridge Engineer---Design
Approved W.E. Lofgren Assistant City Bridge and Viaduct Engineer
Approved Stephen J. Michuda City Bridge and Viaduct Engineer
Approved W.W. DeBerard City Engineer

Scale As noted	June 1949
Drawn by / Traced by / Checked by / In Charge of	DRWG 16949
	FILE No 11-6-0-43

1660820055

135 B Per 407

135 B Per 407 - 3411

REVISIONS
End conn angle of GB changed. Also thickness of top splice pl. increased. W.F.B. 9-22-49.

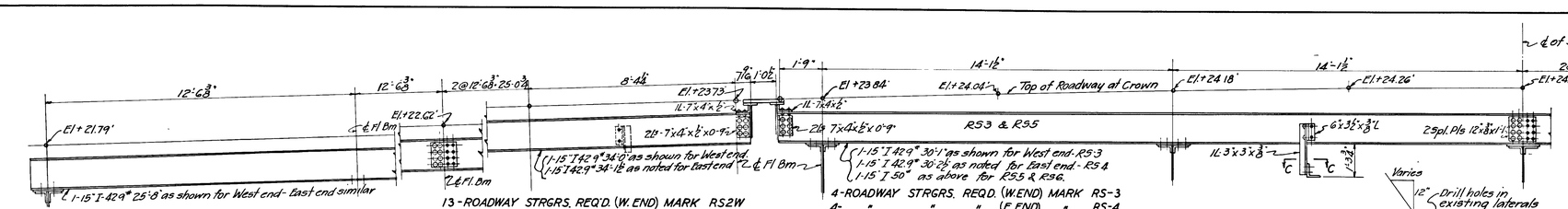

REVISIONS

Lateral bracing added in outer panels of suspended span. Also minor changes in existing FB. reinf. D.G.W. 9-22-49

Rein Bar added on top flg. of existing arch span girders. A.M.L. 3-7-51

(1-9½ If L 5"x3½"x⅝" FS
1-" L 6"x3½"x½" NS
2 Fills-3½"x-⅜

PLAN OF STRUCTURAL FRAMING
Scale - 3/32" = 1'0"
(Dotted lines indicate existing steel to remain)

3½" x 1" Plate 18'-0" long; weld 4" at one end, scribe cover plate at other end, then heat with torches until free end is 0.07 past mark, and weld this end; then weld full length with ⅝" continuous fillets on both edges.

EXISTING GIRDER SECTION C-C

DIAGRAM OF G2-G3-G5 & G5A
And reinforcement of existing girders

TOP VIEW FOR FB1 & FB5

TOP VIEW FOR FB2 & FB4

FB1 - FB2 - FB5 & FB4
Showing changes for widened bridge
Scale 1"-1'0"

CROSS SECTION
Scale 1"-1 foot.

BRACKET B2 - 4 REQ'D.

FLOORBEAM FB8 - 4 REQ'D.

PLAN

GIRDER G5

GIRDER G5A
(Main material same as for G5 - Splice mat'l not shown here

GIRDER G6

GIRDER G7 - 4 REQ'D.

DIAGRAM G6 & G7

SECTION A-A
CONNECTION FOR G6
FL. BM. CONN. TO G5 SIMILAR

SECTION B-B

PHOS. BRONZE BEVELED PLATE
4 of each type required.

END DETAIL - GIRDER G6
END DETAIL - " G5A SIMILAR
Except for connection at G8
See Drwg No 16950

END DETAIL - GIRDER G3
END DETAIL - GIRDER G2 SIMILAR

GIRDER G2

GIRDER G3

FLOOR BEAM FB6

FLOORBEAM & SIDEWALK BRACKET CONN. ON G3
FLOORBEAM TO G2 SIMILAR

NOTE:
Material: Structural carbon steel copper bearing.
Rivets - ¾ Diam.
Open holes - 13/16 Diam except as noted.
Welding - Welding shall be in accordance with Specifications of the American Welding Society for Highway and Railway Bridges.
For quality of material, punching, reaming and general requirements of fabrication, see specifications.

STATE OF ILLINOIS — HUGH A. DIBBLE — 1001 CITY HALL CHICAGO — REGISTERED STRUCTURAL ENGINEER

Correct: G. Heinrich 5-20-49 — Assistant Bridge Engineer — Design
Approved: E. Foran — Assistant Chief Bridge and Viaduct Engineer
Approved: Stephen Sitnicka — Chief Bridge and Viaduct Engineer
Approved: M. M. Good — City Engineer

CITY OF CHICAGO
DEPARTMENT OF PUBLIC WORKS
BUREAU OF ENGINEERING
DIVISION OF BRIDGES AND VIADUCTS

WIDENING
OF
W. IRVING PARK ROAD FIXED BRIDGE
OVER THE
NORTH BRANCH---CHICAGO RIVER
SUPERSTRUCTURE AND APPROACHES

GIRDERS AND FLOORBEAMS

Scale 3/32" & 1/4" = 1'-0"	June, 1949
Drawn by J. F. Pohpheff	DRWG 16951
Traced by A. Zagrodzki	
Checked by E. J. Stoffel	FILE No. 11-G-0-45
In Charge of F. E. Koch	

5 OF 8

135 B Per 405 - 3431

1660820057

135 B Per 405

REVISIONS

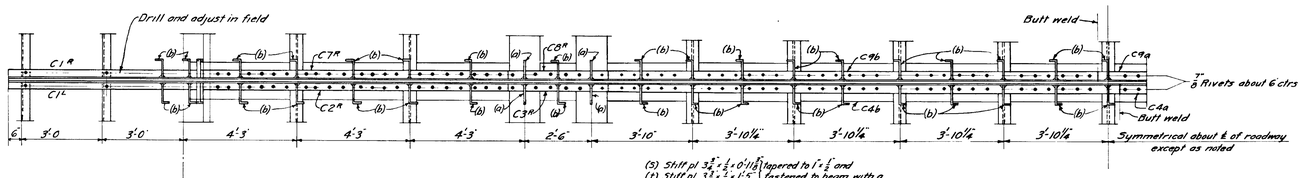

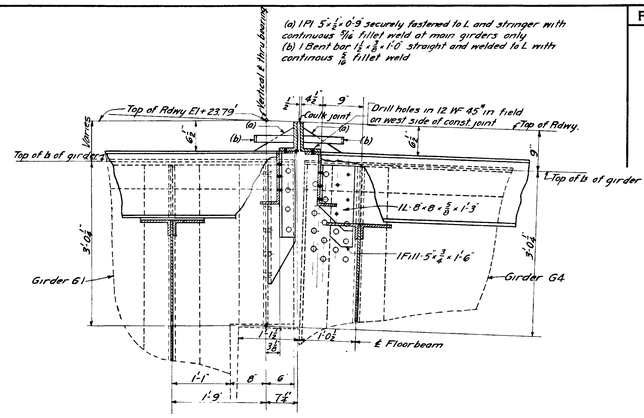

SECTION A-A
Showing Connections to Girders
Scale 1"=1Ft.

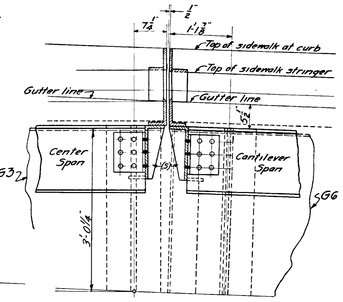

SECTION F-F

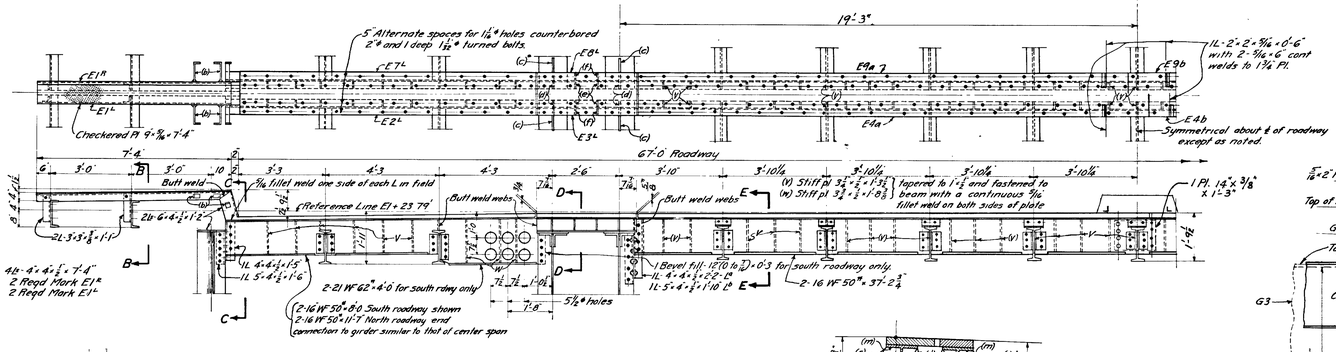

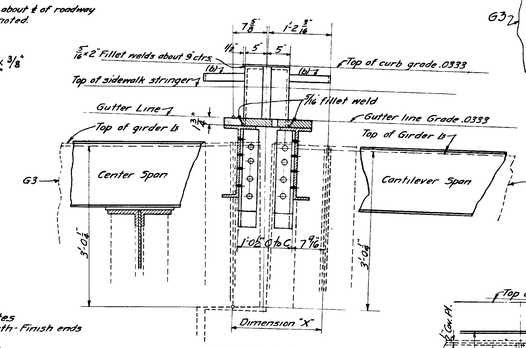

SECTION C-C
Showing Connections to Girders
Scale 1"=1Ft.

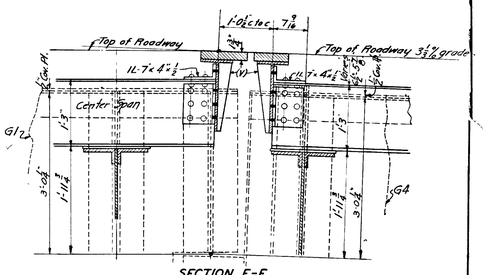

SECTION E-E

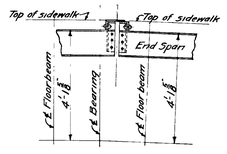

SECTION B-B

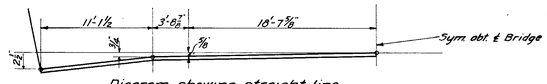

Diagram showing straight line adaptation of roadway crown for top of 1¾" expansion joint plates.

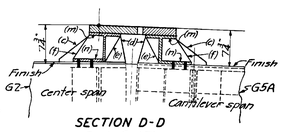

SECTION D-D
Scale 1"=1Ft.

(m) 4-16" WF-50#×3'-0⅜" cut web to 6
(n) 4-7"×⅞"×3'-0⅜" fasten to T web by a continuous ⅜" fillet weld on top and a V weld on bottom
(c) and (d) ½" Pls fasten to channel and girder with a continuous ⅜" fillet weld on both sides of plates
(e) and (f) ½" Pls fasten to channel with a continuous ⅝" fillet weld on both sides of plates.

Roadway Wearing Plates
Machine flame cut teeth- Finish ends
2 Pls-11'-1⅛" Mark E7 ⅛
2 Pls-11'-1½" Mark E2 ½
2 Pls-3'-0⅞" Mark E8 ⅜
2 Pls-3'-0⅞" Mark E3 ⅝
1 Pl-19'-0⅞" Mark E4a
1 Pl-19'-0⅞" Mark E9b
1 Pl-18'-2⅞" Mark E4b
1 Pl-18'-2⅞" Mark E9a

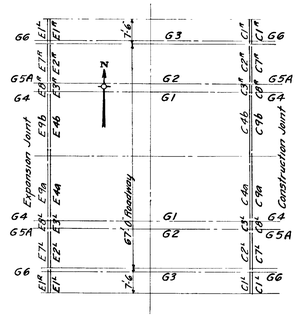

LOCATION DIAGRAM

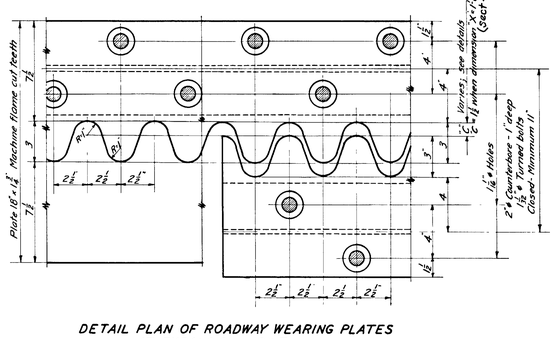

DETAIL PLAN OF ROADWAY WEARING PLATES AT EXPANSION JOINT
Scale 3"=1Foot

GENERAL NOTES :-
Material :- Structural carbon steel, copper bearing.
Welding :- Welding shall be in accordance with the Specifications of the American Welding Society for Highway and Railway Bridges and with details and typical sections. Top plates of roadway expansion joints shall be machine flame cut. Finish ends.
Holes in beams of cantilever span for bolting down expansion joint sections shall be drilled in shop with joints properly assembled and match marked. Holes in beams of the center span for bolting down expansion joint sections, shall be drilled in the field with all mating units in place and 3⁄4" for clearance "C," increased or decreased from 1⅛" by amount dimension "X" varies from 1'-8" at time expansion plates are adjusted.
All expansion joint sections shall be true to dimensions and free from warp and wind
Mating sections of sidewalk and roadway expansion joints shall be so placed as to produce a continuous smooth surface conforming to the sidewalk and roadway contours respectively.
Contractor shall furnish and install shims where required, to obtain such a surface.

STATE OF ILLINOIS — DESIGN & ENGINEERING — 1001 CITY HALL, CHICAGO — STRUCTURAL SECTION

Correct: [signature] 5-20-49 Assistant Bridge Engineer—Design
Approved: [signature] Assistant Chief Bridge and Viaduct Engineer
Approved: [signature] City Bridge and Viaduct Engineer
Approved: [signature] City Engineer

CITY OF CHICAGO
DEPARTMENT OF PUBLIC WORKS
BUREAU OF ENGINEERING
DIVISION OF BRIDGES AND VIADUCTS

WIDENING
OF
W. IRVING PARK ROAD FIXED BRIDGE
OVER THE
NORTH BRANCH---CHICAGO RIVER
SUPERSTRUCTURE AND APPROACHES

EXPANSION AND CONSTRUCTION JOINTS

Scale ½"=1" & 3"=1'-0"	June, 1949
Drawn by [illegible]	DRWG. 16952
Traced by [illegible]	
Checked by [illegible]	FILE No. 11-6-0-46
In Charge of [illegible]	

6 OF 8

3434 135 B Per 400

1660820058

REVISIONS.

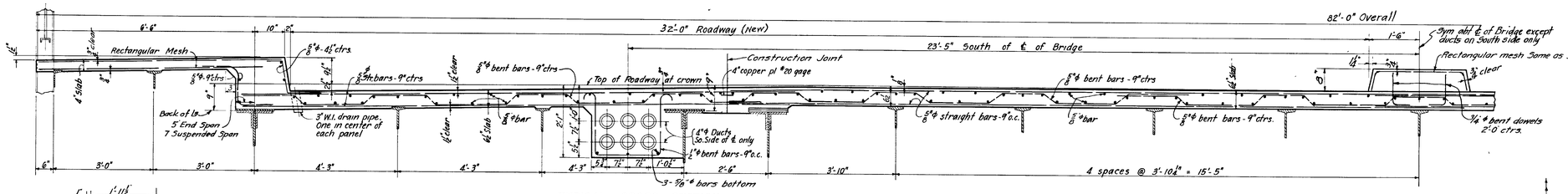

TYPICAL CROSS SECTION
Scale 3/8" = 1'-0"
Section shown for cantilever end spans
Section for suspended span similar

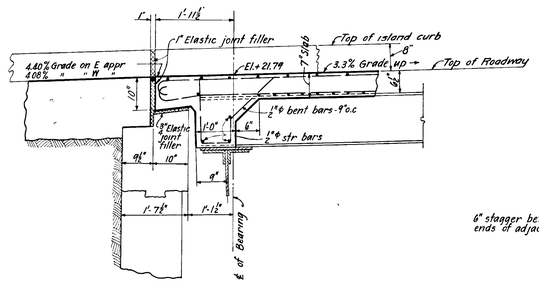

SECTION A-A
Scale 3/4" = 1'-0"
Section A'-A' similar

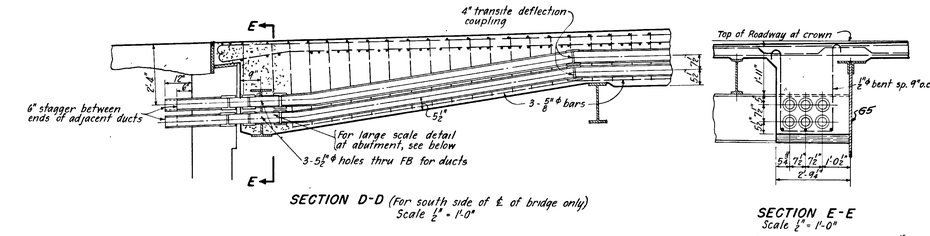

SECTION D-D (For south side of ℄ of bridge only)
Scale 1/2" = 1'-0"

SECTION E-E
Scale 1/2" = 1'-0"

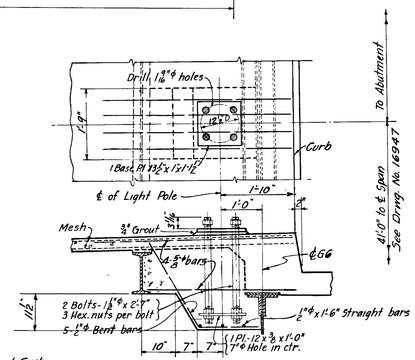

POLE SUPPORT
Scale 3/4" = 1'-0"

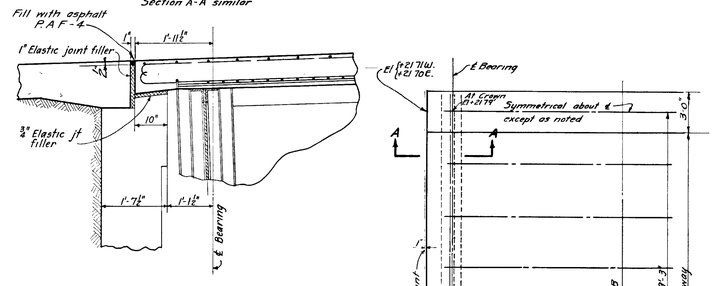

SECTION B-B
Scale 3/4" = 1'-0"

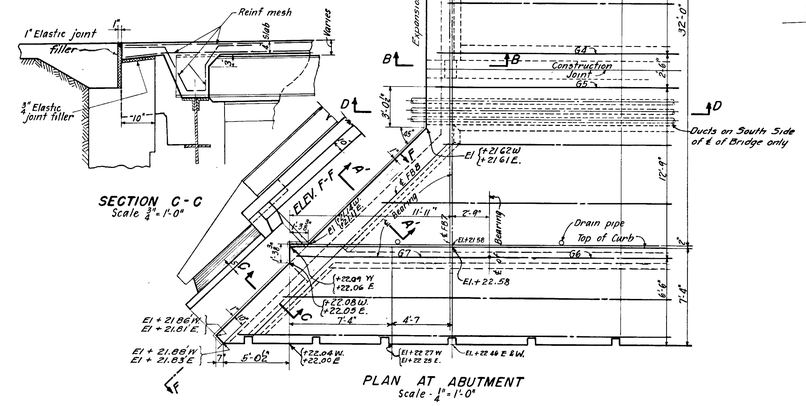

SECTION C-C
Scale 3/4" = 1'-0"

PLAN AT ABUTMENT
Scale - 1/4" = 1'-0"

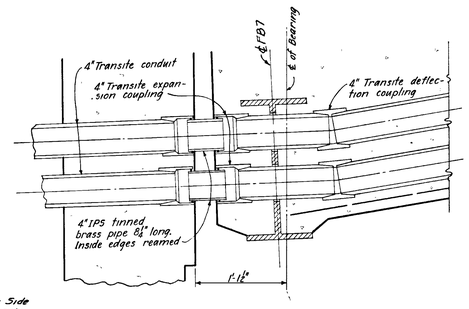

DETAIL OF EXPANSION JOINT AT ABUTMENT
Scale 1 1/2" = 1'-0"

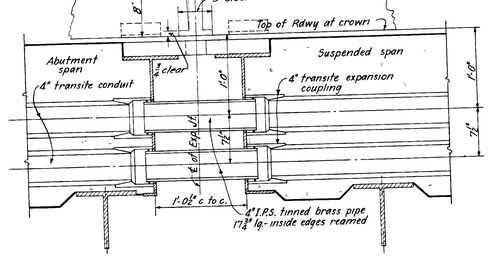

DETAIL OF EXPANSION JOINT (West End Suspended Span)
Scale 1 1/2" = 1'-0"

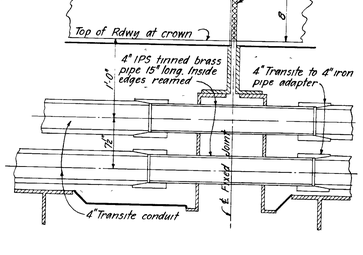

DETAIL OF FIXED JOINT (East End Suspended Span)
Scale 1 1/2" = 1'-0"

NOTES:-

For sidewalk slab use 4x12 mesh 4/4 x 6/6 wires. At splices the meshes shall be tied together with #16 annealed iron wire with ties about 12" intervals at laps and splices, 4" side laps, 12" end laps. Main reinforcing to run at right angles to stringers. Wire mesh shall be cut to required lengths and straightened.

All 5/8" bars to lap 2'-0"

All ducts and appurtenances to be furnished and delivered by the Commonwealth Edison Co.

All ducts passing thru web of beams shall be spaced 7 1/2" as shown with separate holes, 5 1/2"ϕ for each duct.

For quality of material and other requirements of construction see specifications.

All steel surfaces in contact with concrete to receive two coats of the specified damp-proofing.

Contractor shall furnish complete set of shop plans for reinforcement before commencing work for approval.

CITY OF CHICAGO
DEPARTMENT OF PUBLIC WORKS
BUREAU OF ENGINEERING
DIVISION OF BRIDGES AND VIADUCTS

WIDENING
OF
W. IRVING PARK ROAD FIXED BRIDGE
OVER THE
NORTH BRANCH---CHICAGO RIVER
SUPERSTRUCTURE AND APPROACHES
CONCRETE SLABS AND REINFORCEMENT

STATE OF ILLINOIS — REGISTERED STRUCTURAL ENGINEER — 1001 — CITY HALL — CHICAGO

Correct: Superintendent 5-20-49
Assistant Bridge Engineer—Design
Approved: H.E. Lofgren
Assistant City Bridge and Viaduct Engineer
Approved: Stephen J. Michuda
City Bridge and Viaduct Engineer
Approved: John D. Driscoll
City Engineer

Scale 1/2"-3/4"&1 1/2" = 1'-0"	June, 1949
Drawn by A. Ness	DRWG 16953
Traced by J.J. Dorman	
Checked by H. Bergstrom	FILE No. 11-6-0-47
In Charge of E.C. Noble	

7 OF 8

135 B Per 402 - 3433

1660820059

135 B Per 402

REVISIONS
Material note changed C.A.S. 6-15-49

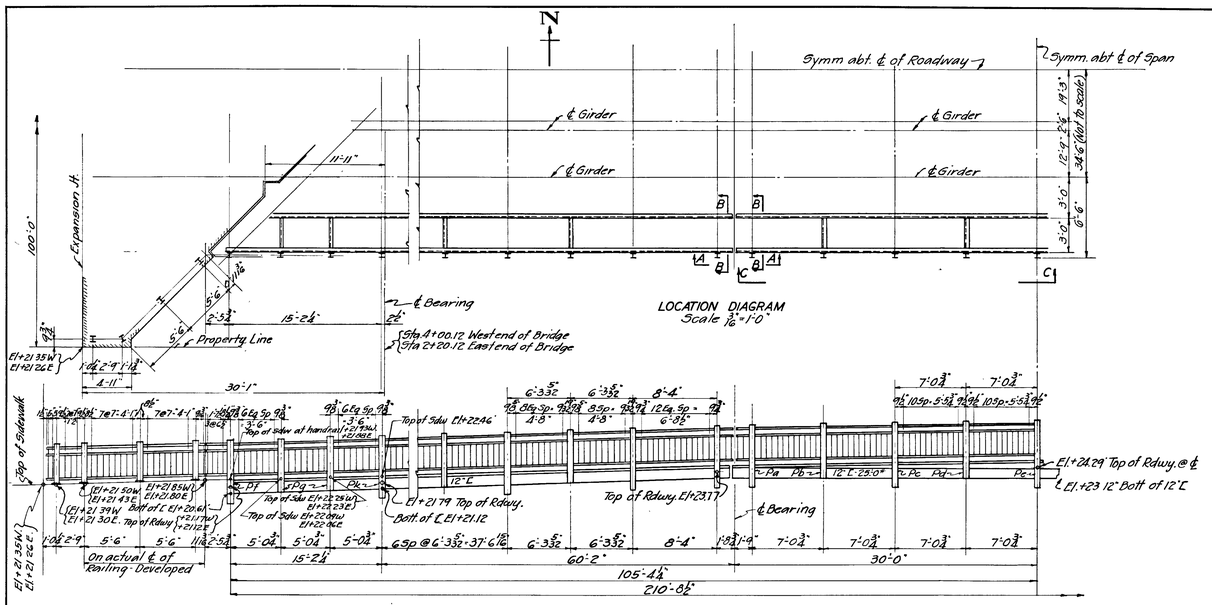

LOCATION DIAGRAM
Scale 3/16" = 1'-0"

SOUTH ELEVATION
Showing west half; East half opposite hand
Scale 3/16" = 1'-0"
About 422' of Hand Railing required.

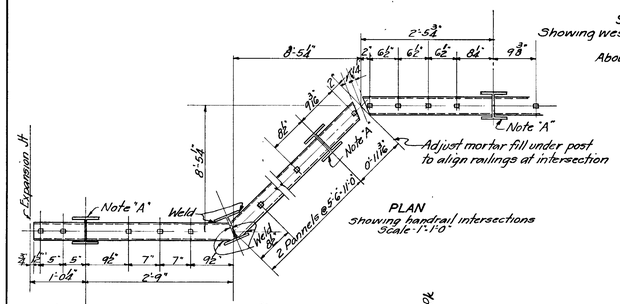

PLAN
Showing handrail intersections
Scale 1"-1'-0"

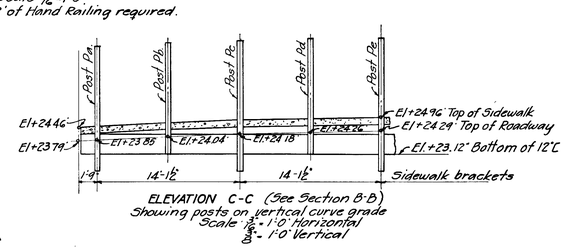

ELEVATION C-C (See Section B-B)
Showing posts on vertical curve grade
Scale 3/16" = 1'-0" Horizontal
3/16" = 1'-0" Vertical

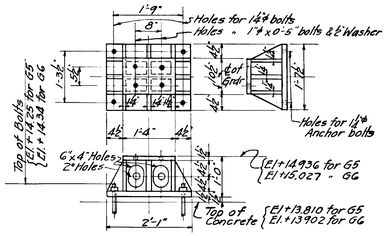

ABUTMENT SHOE
for G5 & G6 - 8 Req'd.
Material - Cast Steel

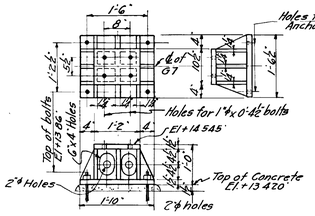

ABUTMENT SHOE
For G7 - 4 Required
Material - Cast Steel

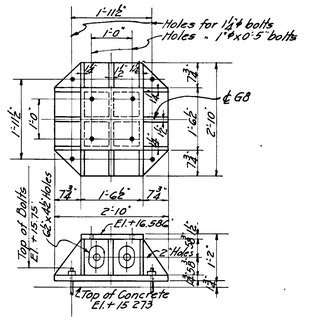

PIER SHOE
For G8 - 4 Req'd.
Material - Cast Steel

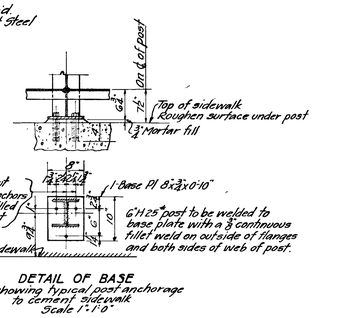

DETAIL OF BASE
Showing typical post anchorage to cement sidewalk
Scale 1"-1'-0"

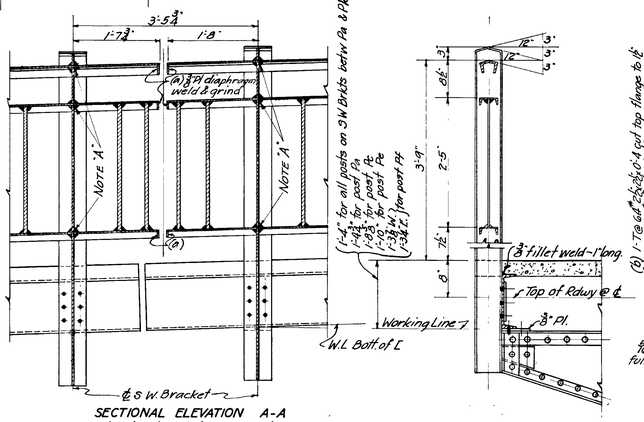

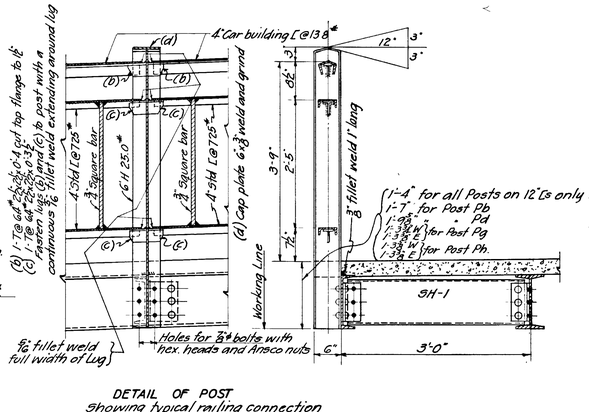

NOTES:

Material - Structural carbon steel with Rivets - ⅞"ø, all copper alloyed (except castings)
Open Holes - 15/16"ø, except as noted.
Welding - All welding shall be in accordance with the American Welding Society's specifications for Welded Highway and Railway Bridges.
All posts and railing buckets shall be vertical railing channels shall be neatly secured to posts as shown.
Contractor shall take all necessary precaution to assure the correct alignment and elevation of posts and railings.
For quality of material, punching, reaming, welding, and other requirements of fabrication, see specifications.
For pipe railings on approaches, see Drawing No 16449

CITY OF CHICAGO
DEPARTMENT OF PUBLIC WORKS
BUREAU OF ENGINEERING
DIVISION OF BRIDGES AND VIADUCTS

WIDENING
OF
W. IRVING PARK ROAD FIXED BRIDGE
OVER THE
NORTH BRANCH---CHICAGO RIVER
SUPERSTRUCTURE AND APPROACHES

HANDRAIL AND GIRDER SHOES

STATE OF ILLINOIS
REGISTERED STRUCTURAL ENGINEER
1001
CITY HALL
CHICAGO

Correct _____ Assistant Bridge Engineer—Design 5-20-49
Approved _____ Assistant City Bridge and Viaduct Engineer
Approved _____ City Bridge and Viaduct Engineer
Approved _____ City Engineer

Scale 3/16" & 1"=1'-0"	June, 1949	
Drawn by A. Yass	DRWG. 16954	8 OF 8
Traced by		
Checked by	FILE No. 11-G-0-48	
In Charge of E. Hecht		

135B Per 404

1660820060

135B Per 404 - 3437

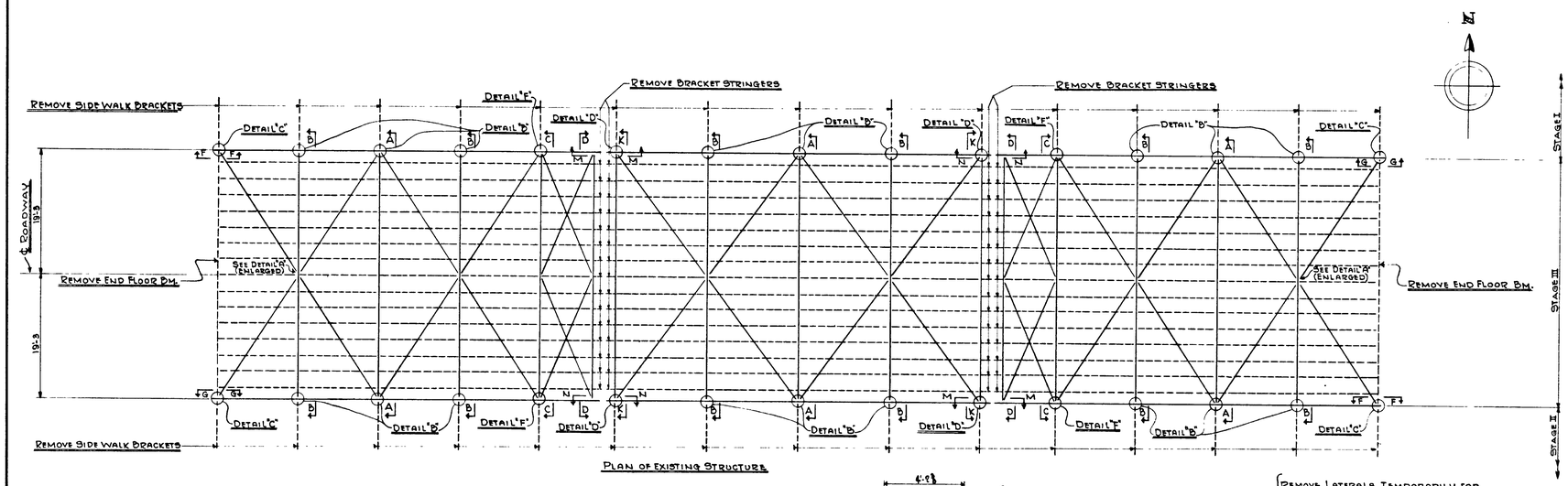

PLAN OF EXISTING STRUCTURE

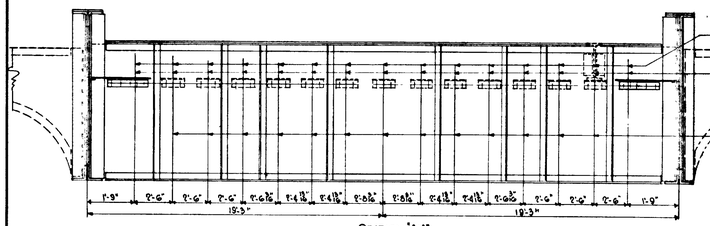

SECTION "A-A"
SECTION "K-K"

PARTS AS NOTED IN THESE SECTIONS TO BE REMOVED IN STAGE III

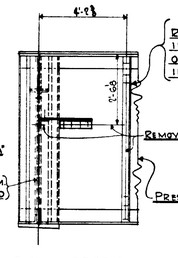

SECTION F-F AS SHOWN
SECTION G-G OPP HAND

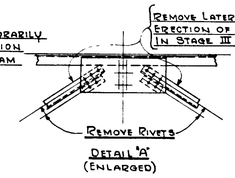

DETAIL "A" (ENLARGED)

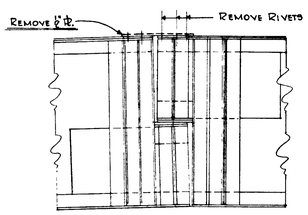

SECTION "M-M" AS SHOWN
SECTION "N-N" OPP. HAND

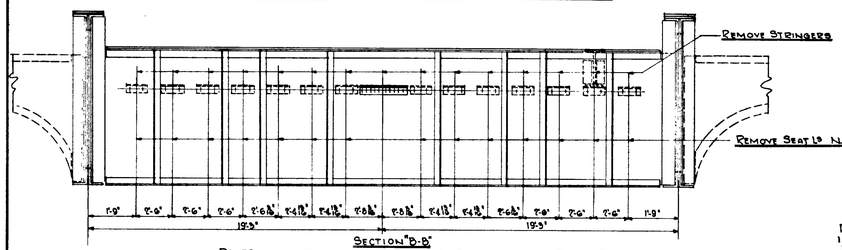

SECTION "D-D"

PARTS AS NOTED IN THIS SECTION TO BE REMOVED IN STAGE III

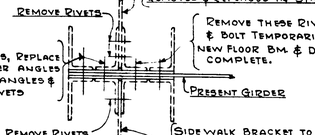

DETAIL "C" ENLARGED

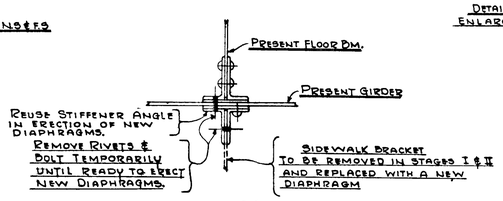

DETAIL "B" ENLARGED

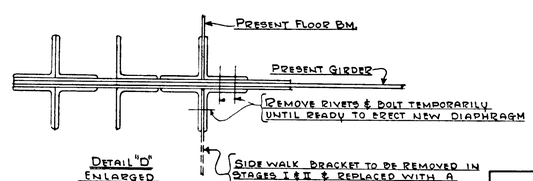

DETAIL "D" ENLARGED

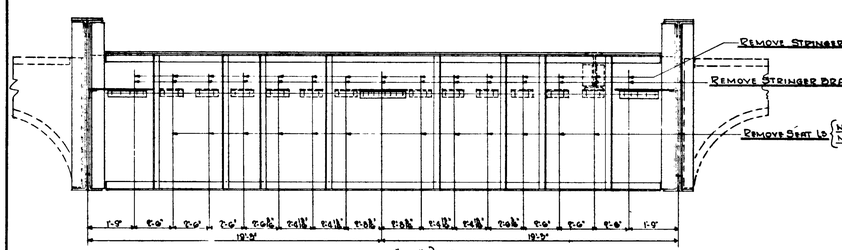

SECTION "C-C"
SECTION "D-D"
} PARTS AS NOTED IN THESE SECTIONS TO BE REMOVED IN STAGE III

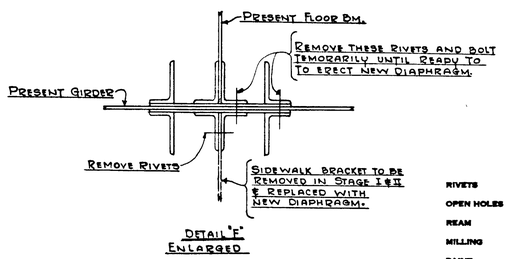

DETAIL "E" ENLARGED

RIVETS
OPEN HOLES
REAM
MILLING
PAINT
SHOP CONTACT SURFACES NOT PAINTED

NOTE:
DETAILS "B", "C", "D", & "E" ARE AS SHOWN FOR NORTH EAST & SOUTH WEST PORTION OF BRIDGE & OPP HAND FOR NORTH WEST & SOUTH EAST PORTION OF BRIDGE

ERECTOR NOTES

PARTS OF EXISTING STRUCTURE TO BE REMOVED ACCORDING TO SPEC'S., IN STAGES AS SHOWN ON PLAN.
PARTS TO BE REMOVED AND DISCARDED ARE SHOWN IN DOTTED LINES.
REMOVE ALL RIVETS IN BOTT. FLG. OF FLOOR STRINGERS TO LATERALS & GUSSET PLS.
FOR FIELD RIVETS TO BE DRIVEN SEE "R" SHEETS.
FOR ERECTION OF NEW STRUCTURAL STEEL SEE ERECTION DRWG. NO. E2, E3, E4 & E5

APPROVED FOR THE DIVISION OF BRIDGES & VIADUCTS AS TO GENERAL ARRANGEMENT AND DESIGN BUT NOT FIELD ASSEMBLY, DETAILS OR DIMENSIONS, UNLESS SO NOTED.
BY W.F. Bohnhoff DATE 8-3-50
APPROVED
APPROVED Gustavus J. Esmond ASSISTANT BRIDGE ENGINEER
APPROVED M.E. Hirsch ASSISTANT BRIDGE ENGINEER
APPROVED Stephen J. Murphy BRIDGE & VIAD ENGINEER
APPROVED Wm. Bernard CITY ENGINEER

CITY OF CHICAGO
DEPARTMENT OF PUBLIC WORKS
BUREAU OF ENGINEERING
DIVISION OF BRIDGES & VIADUCTS

WEST IRVING PARK BRIDGE OVER THE NORTH BRANCH / CHICAGO RIVER

JOHN F. BEASLEY CONST. CO. CONTRACTORS
SUBCONTRACTORS
BETHLEHEM STEEL CO. FABRICATORS

PLAN OF EXISTING STRUCTURE
SHOWING PRESENT STEEL TO BE REMOVED

MADE BY	CHECKED BY	TRACED BY
J.P.S	L.G 6-15-50	

IN CHARGE-HERB SCALE:
CONTRACT NO. CG 1899 SHEET NO. E1
CITY DWG. NO. 17946 FILE NO. 11-6-0-29

1660820061

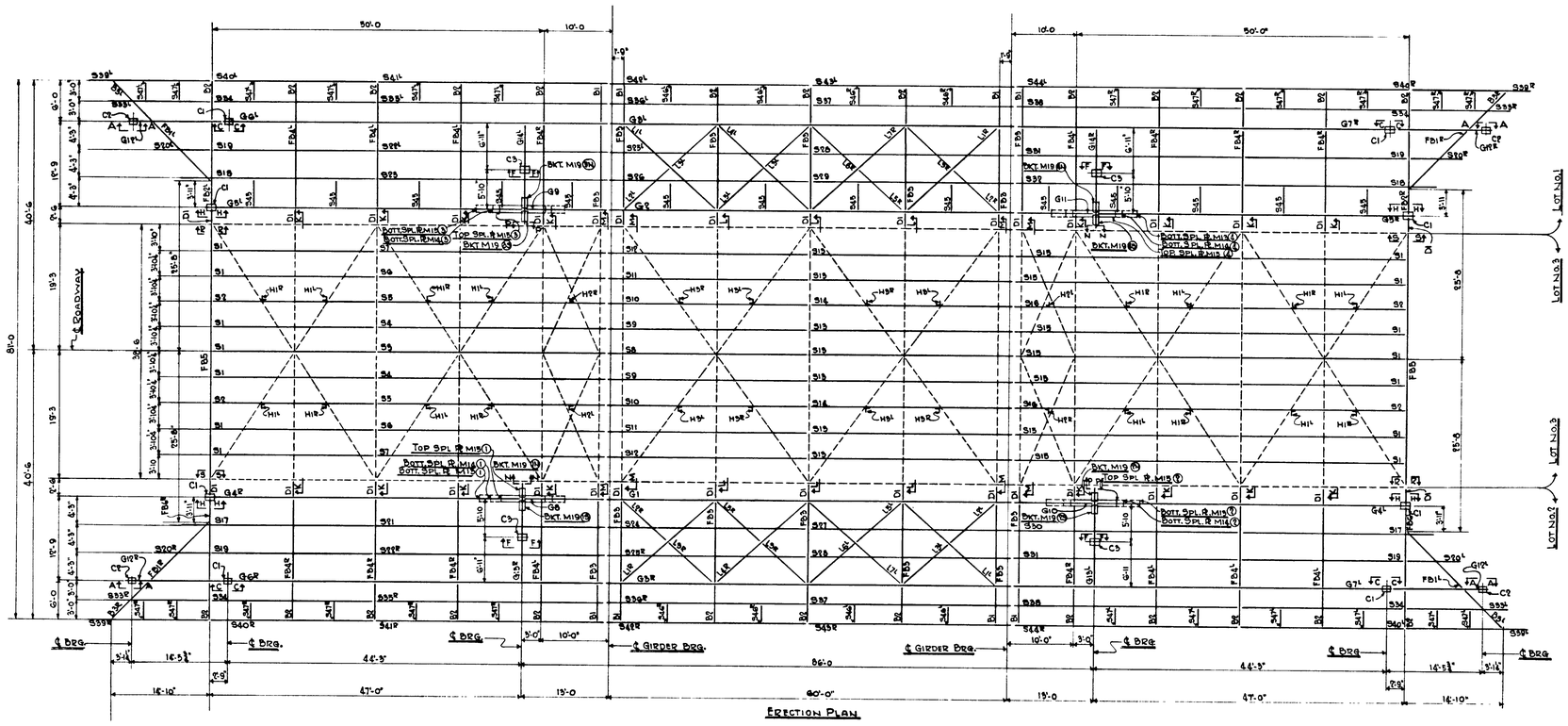

ERECTION PLAN

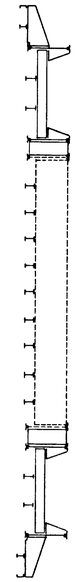

TYPICAL TRANSVERSE SECTION

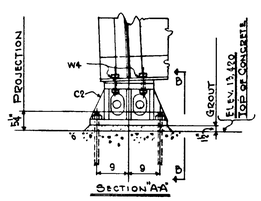

SECTION "A-A"

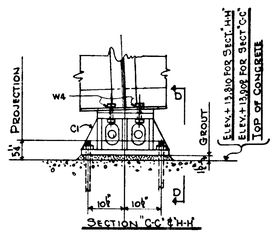

SECTION "C-C" & "H-H"

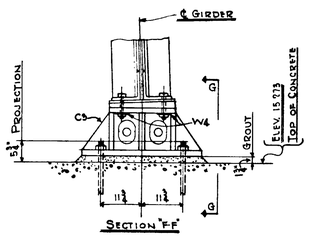

SECTION "F-F"

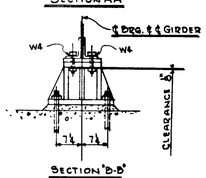

SECTION "B-B"

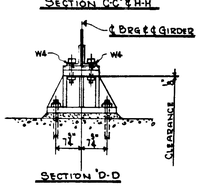

SECTION "D-D"

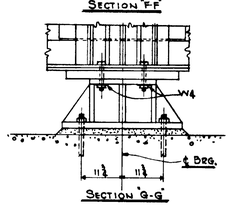

SECTION "G-G"

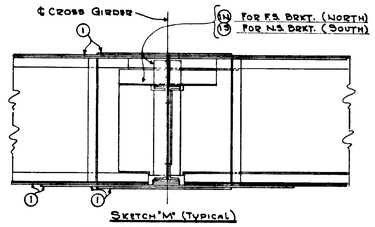

SKETCH "M" (TYPICAL)

MATCH MARK NOTES

SPLICE PLATES AND BRACKETS WILL HAVE AN ASSEMBLY MARK PLUS A SUFFIX (1), (2); (12), (13); (14), (15) ETC. CORRESPONDING MARKS WILL BE AFFIXED ON GIRDERS AND SPLICE PLATES. FOR PROPER PLACING OF SPLICE PLATES AND BRACKETS, THE MATCH MARK MUST BE KEPT TOWARD THE OUTSIDE AND IN A POSITION CLOSELY RELATED WITH MATCH MARK ON GIRDER OR SPLICE PLATE.

ERECTORS NOTES

(1) ERECTION MARKS ARE PAINTED ON MEMBERS IN THE SHOP ON THE SAME END AS THEY APPEAR ON THE ERECTION PLAN AND IN AN UPRIGHT POSITION. MEMBERS MUST BE ERECTED WITH THE MARKS IN THE SAME POSITION AS SHOWN ON THE ERECTION PLAN.

(2) ANCHOR BOLTS ARE NOT FURNISHED BY BETHLEHEM STEEL CO.
CAST STEEL BEARING SHOES ARE TO BE SET AND GROUTED TO CORRECT ELEVATION BEFORE GIRDERS ARE ERECTED.
SHIMS F55 TO F58 & WEDGES M20 ARE FURNISHED FOR SETTING OF BEARING SHOES, EACH SHOE TO BE SHIMMED AT THREE POINTS.

(3) ALL FIELD CONNECTIONS ARE TO BE RIVETED EXCEPT WHERE OTHERWISE SHOWN OR NOTED.
(a) GIRDERS TO BE BOLTED TO SHOES WITH 1"ϕ BOLTS USE ONE ½" WASHER W4 FOR EACH BOLT.
(b) SUSPENDED GIRDERS OF CENTER SPAN ARE BOLTED TO SEATS ON CANTILEVER GIRDERS. USE ONE ½" WASHER FOR THESE BOLTS.
(c) NUTS ARE NOT TO BE TIGHTENED AT SLOTTED HOLES BUT ARE TO HAVE ⅛" CLEARANCE WITH THREADS BURRED SO THAT NUTS WILL BE LOCKED IN PLACE
(d) CONSTRUCTION JOINT ANGLES ARE TO BE BOLTED TO TOP OF DIAPHRAGMS AND GIRDERS WITH ⅞"ϕ MACHINE BOLTS. USE WASHER W5 OR W5
(e) RAIL POSTS ARE TO BE BOLTED TO SIDEWALK STRINGERS. THE ¾" BOLTS WITH ANCO NUTS FOR THESE CONNECTIONS ARE NOT FURNISHED BY BETHLEHEM STEEL CO..
(f) SEE ERECTORS FIELD RIVET & BOLT LISTS FOR LENGTH AND LOCATION OF RIVETS & BOLTS.

(4) EAST END OF EXISTING SUSPENDED SPAN GIRDERS ARE TO BE WELDED TO EXISTING APPROACH SPAN GIRDERS AS DIRECTED BY THE ENGINEER.

For Sections K-K, L-L, M-M, N-N, P-P, R-R & S-S
See Erection Plan E3

APPROVED FOR THE DIVISION OF BRIDGES & VIADUCTS AS TO GENERAL ARRANGEMENT AND DESIGN BUT NOT FIELD ASSEMBLY, DETAILS OR DIMENSIONS, UNLESS SO NOTED.
BY W.F. Bohnhoff DATE 8-3-50
APPROVED
APPROVED ASSISTANT BRIDGE ENGINEER
APPROVED ASST. CHIEF BRIDGE & VIAD ENGINEER
APPROVED CHIEF BRIDGE & VIAD ENGINEER
APPROVED CITY ENGINEER

RIVETS
OPEN HOLES
REAM
MILLING
PAINT
SHOP CONTACT SURFACES NOT PAINTED

CITY OF CHICAGO
DEPARTMENT OF PUBLIC WORKS
BUREAU OF ENGINEERING
DIVISION OF BRIDGES & VIADUCTS
WEST IRVING PARK BRIDGE
OVER THE
NORTH BRANCH / CHICAGO RIVER

JOHN F. BEASLEY CONST. CO. — CONTRACTORS
SUBCONTRACTORS
BETHLEHEM STEEL CO. — FABRICATORS

ERECTION PLAN

MADE BY	CHECKED BY	TRACED BY
J.P.S	LG 6-12-50	

IN CHARGE-HERB — SCALE:
CONTRACT NO. CG 1089 — SHEET NO. E2
CITY DWG. NO. 7947 — FILE NO. 11-6-0-50

1660820062

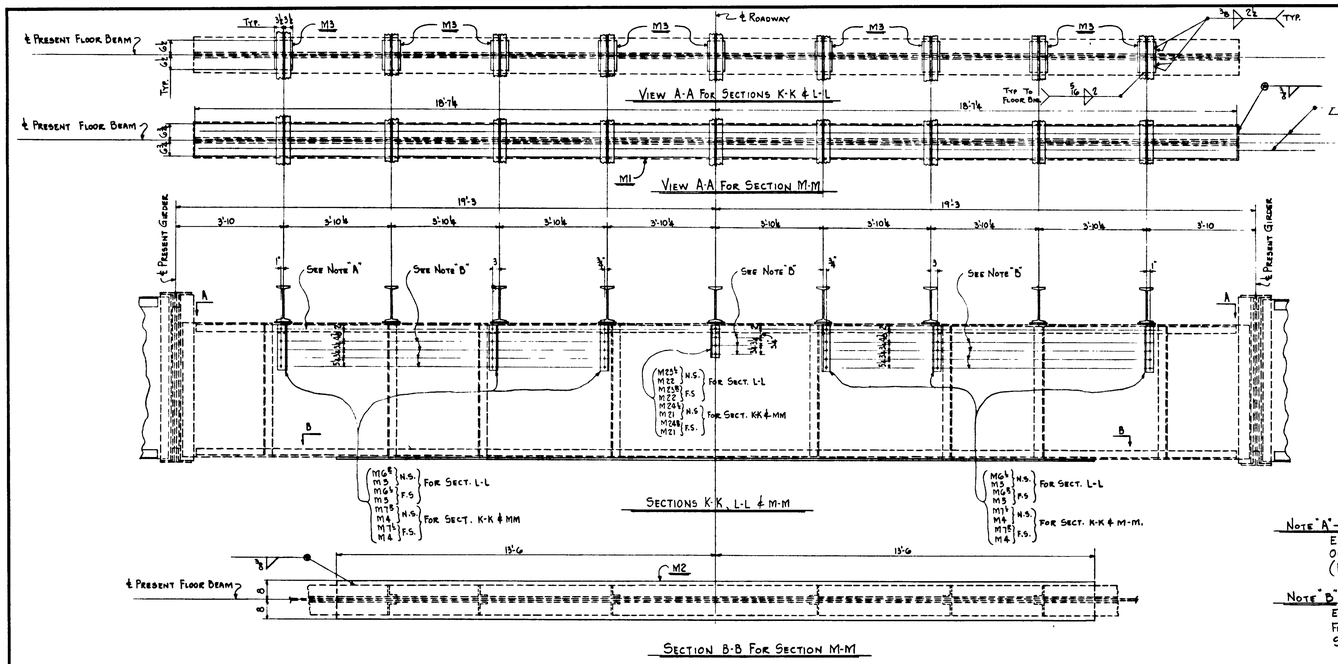

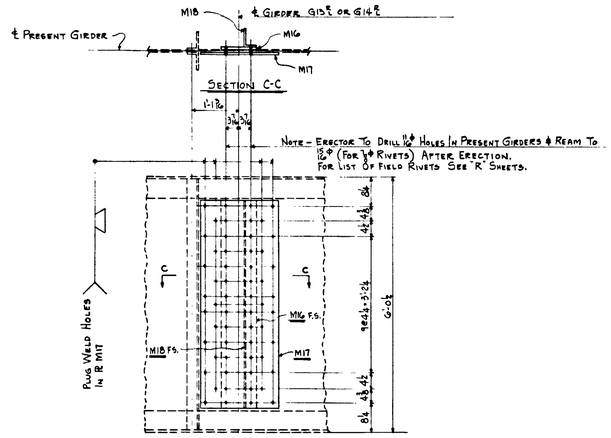

Section N-N As Shown
Section P-P Opp. Hand

Note "A" –
Erector To Remove Rivets Where Shown On Present Floor Beams And Ream To 15/16 (For 7/8 Rivets) For Erection Of New Stiff. Ls

Note "B" –
Erector To Drill 15/16 Holes In Present Floor Beams For Erection of New Stiffeners & Fills

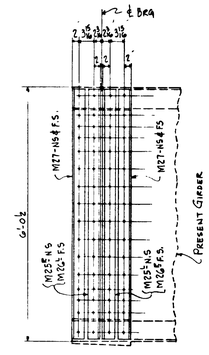

Section R-R As Shown
Section S-S Opp. Hand

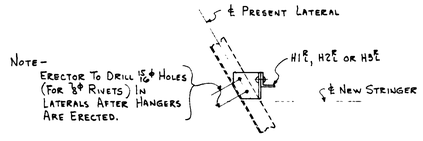

Note –
Erector To Drill 15/16 Holes (For 7/8 Rivets) In Laterals After Hangers Are Erected.

Typical Detail New Hangers To Present Laterals

Sections K-K, L-L, M-M, N-N, P-P, R-R & S-S Are Taken From Sheet # E2

RIVETS
OPEN HOLES
REAM
MILLING
PAINT
SHOP CONTACT SURFACES NOT PAINTED

APPROVED FOR THE DIVISION OF BRIDGES & VIADUCTS AS TO GENERAL ARRANGEMENT AND DESIGN BUT NOT FIELD ASSEMBLY, DETAILS OR DIMENSIONS, UNLESS SO NOTED.

BY W. F. Bohnhoff DATE 8-3-50

APPROVED
APPROVED [signature] ASSISTANT BRIDGE ENGINEER
APPROVED [signature] ASST. CITY BRIDGE & VIAD. ENGINEER
APPROVED [signature] CITY BRIDGE & VIAD. ENGINEER
APPROVED [signature] CITY ENGINEER

CITY OF CHICAGO
DEPARTMENT OF PUBLIC WORKS
BUREAU OF ENGINEERING
DIVISION OF BRIDGES & VIADUCTS

West Irving Park Bridge
over the
North Branch - Chicago River

John F Beasley Const. Co CONTRACTORS
SUBCONTRACTORS
BETHLEHEM STEEL CO. FABRICATORS

Erection Plan

MADE BY	CHECKED BY	TRACED BY
LG 7-7-50	LDH 7-8-50	

IN CHARGE-HERB SCALE:
CONTRACT NO. CG 1899 SHEET NO. E3
CITY DWG NO. 17948 FILE NO. 11-6-0-51

1660820063

22

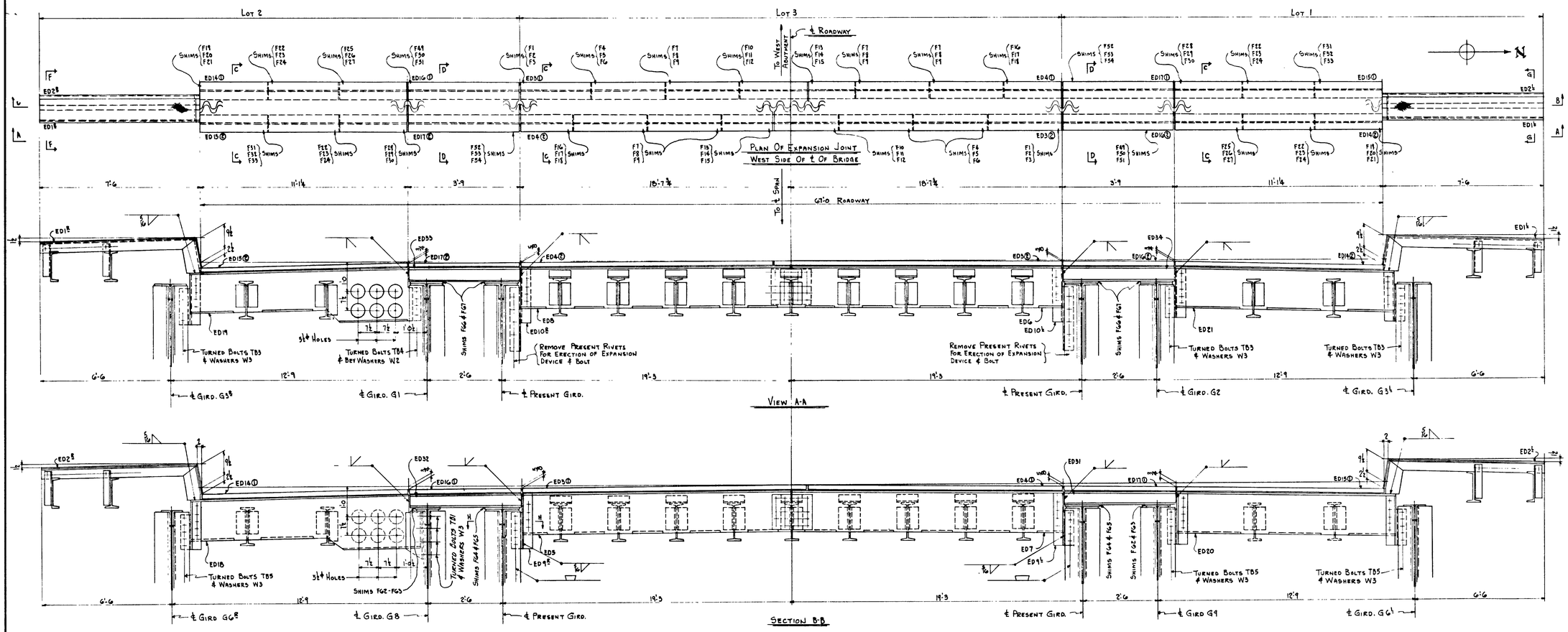

Notes

For Erectors Notes See Sheet # E2

Shims F62 To F67 Incl. Are To Be Used Only If Required For Vertical Adjustment Of The Bottom Of Expansion Supports ED31, ED32, ED33 & ED34 At Top Of Girders. ⅛" Thick Normal Shims F19, F22 Etc. & ¼ & 1/16" Thick Adjusting Shims F20, F21, F23, F24 Etc. Are Furnished For Vertical Adjustment Of Expansion Plates.

All Connections On This Sheet To Be Field Riveted Except Where Called For To Be Welded Or Bolted.

Expansion Plates Have Been Assembled In The Shop And Matchmarked By Adding The Suffix (D or (E) To The Mark, And They Must Be Erected Accordingly.

Burr Threads At Face Of All Nuts After Bolts Have Been Finally Tightened.

RIVETS
OPEN HOLES
REAM
MILLING
PAINT
SHOP CONTACT SURFACES NOT PAINTED

APPROVED FOR THE DIVISION OF BRIDGES & VIADUCTS AS TO GENERAL ARRANGEMENT AND DESIGN BUT NOT FIELD ASSEMBLY, DETAILS OR DIMENSIONS, UNLESS SO NOTED.
BY W.F Bohnhoff DATE 8-3-50
APPROVED
APPROVED ASSISTANT BRIDGE ENGINEER
APPROVED ASST. SUPT. OF BRIDGES & VIAD. ENGINEER
APPROVED CITY BRIDGE & VIAD. ENGINEER
APPROVED CITY ENGINEER

CITY OF CHICAGO
DEPARTMENT OF PUBLIC WORKS
BUREAU OF ENGINEERING
DIVISION OF BRIDGES & VIADUCTS

WEST IRVING PARK BRIDGE
OVER THE
NORTH BRANCH ~ CHICAGO RIVER

JOHN F. BEASLEY CONST CO — CONTRACTORS
SUBCONTRACTORS
BETHLEHEM STEEL CO. — FABRICATORS

ERECTION PLAN OF EXPANSION DEVICE

MADE BY	CHECKED BY	TRACED BY
L.G	LDH 7-8-50	

IN CHARGE-HERB SCALE:
CONTRACT NO. CG 1899 SHEET NO. E4
CITY DWG NO. 7949 FILE NO. 11-6-0-52

1660820064

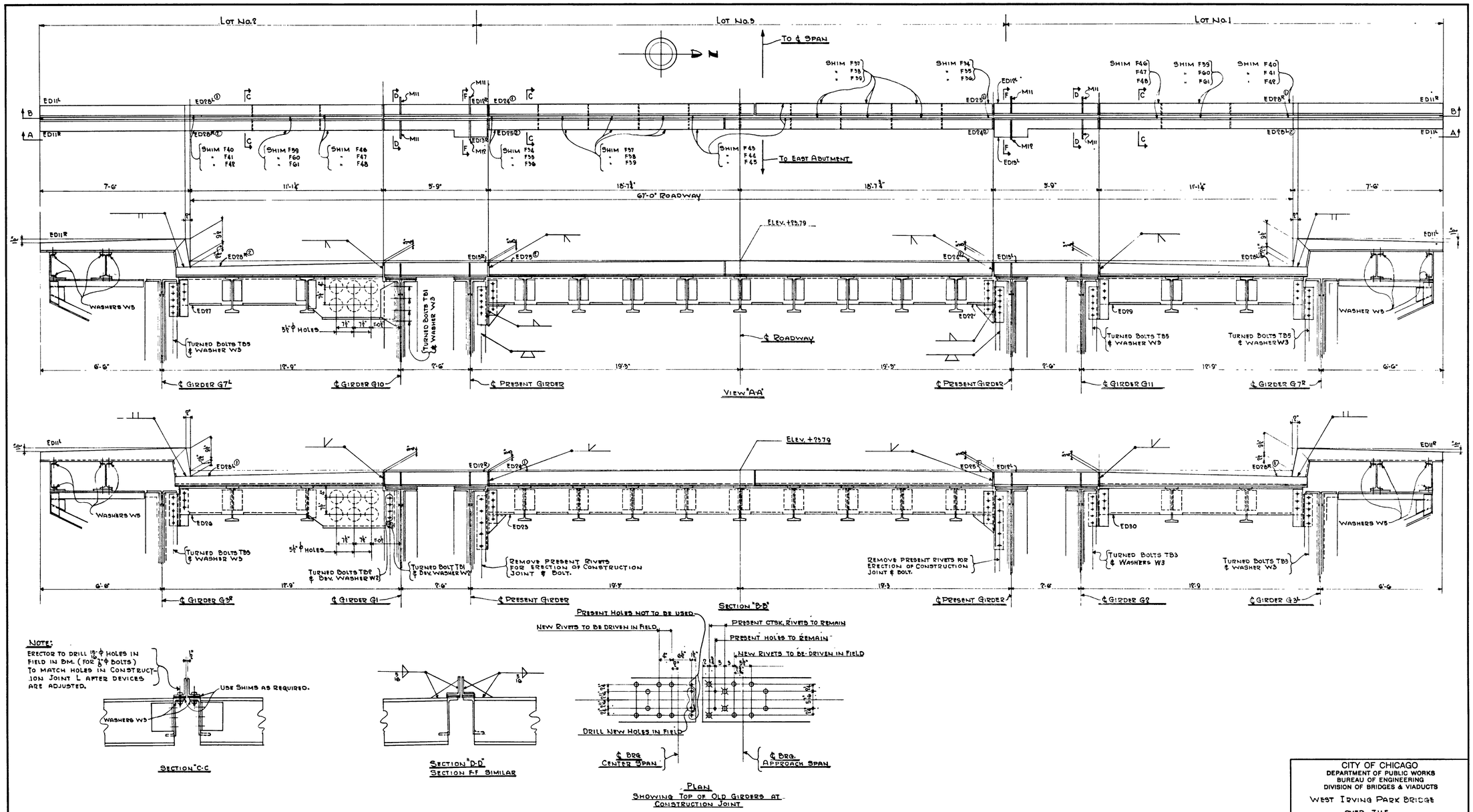

RIVETS
OPEN HOLES
REAM
MILLING
PAINT
SHOP CONTACT SURFACES NOT PAINTED

APPROVED FOR THE DIVISION OF BRIDGES & VIADUCTS AS TO GENERAL ARRANGEMENT AND DESIGN BUT NOT FIELD ASSEMBLY, DETAILS OR DIMENSIONS, UNLESS SO NOTED.

BY W F Bohnhoff DATE 8-3-50

APPROVED
APPROVED G A Heinrich ASSISTANT BRIDGE ENGINEER
APPROVED W E Lofgren ASST. CITY BRIDGE & VIAD ENGINEER
APPROVED Stephen J. Michuda CITY BRIDGE & VIAD ENGINEER
APPROVED W M McDonald CITY ENGINEER

CITY OF CHICAGO
DEPARTMENT OF PUBLIC WORKS
BUREAU OF ENGINEERING
DIVISION OF BRIDGES & VIADUCTS

West Irving Park Bridge over the North Branch Chicago River

John F. Beasley Const. Co. CONTRACTORS
SUBCONTRACTORS
BETHLEHEM STEEL CO. FABRICATORS

Erection Plan of Construction Joint

MADE BY	CHECKED BY	TRACED BY
J.P.S.	LDH 7-11-50	

IN CHARGE-HERB SCALE:
CONTRACT NO. CG 1899 SHEET NO. E5
CITY DWG NO. 17950 FILE NO. 11-6-0-53

24

1660820065

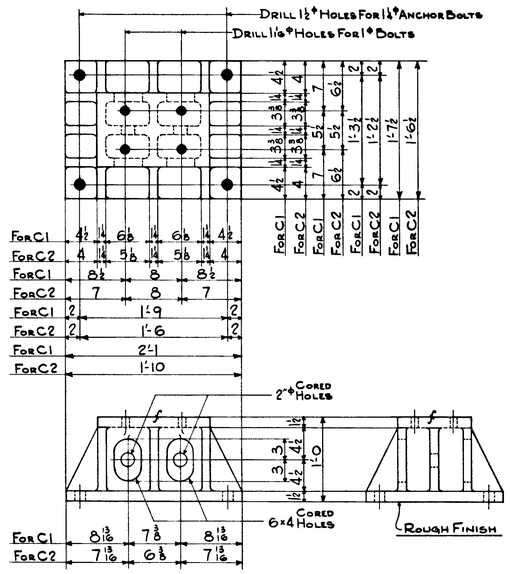

Cast Steel

Abutment Shoes C1 & C2 (Ord On Req. RG53150)

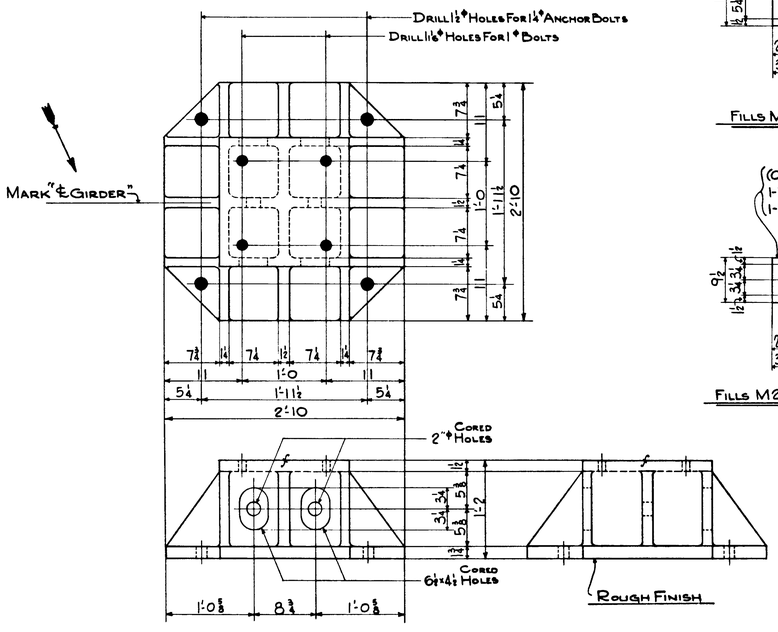

Cast Steel

Pier Shoe C3 (Ord. On Req. RG 53150)

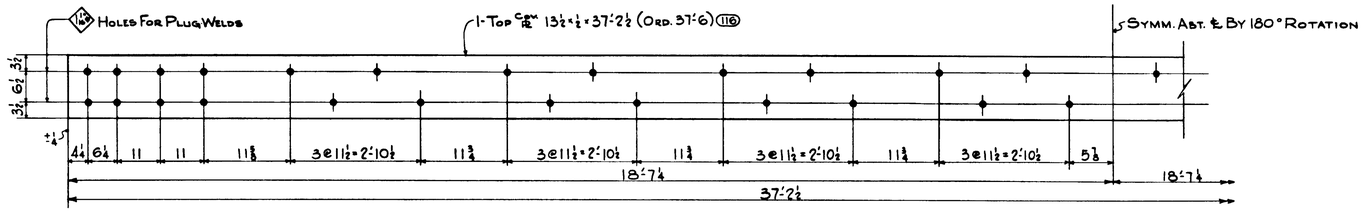

Top Cover Plate M1

No Paint

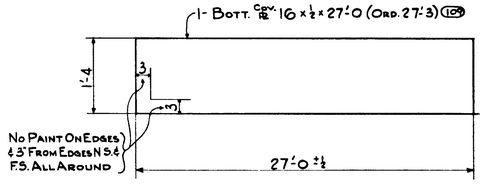

Bottom Cover Plate M2

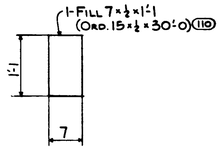

Fill M3

No Paint

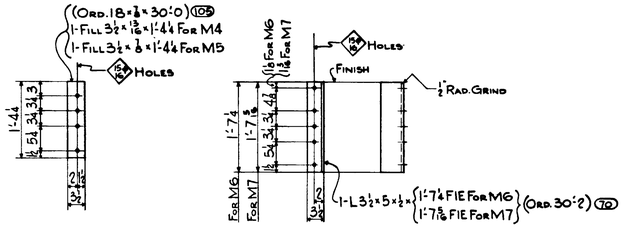

Fills M4 & M5

Stiffener Angles M6R & M7R (As Shown)

Stiffener Angles M6L & M7L (Opp Hand) Resp.

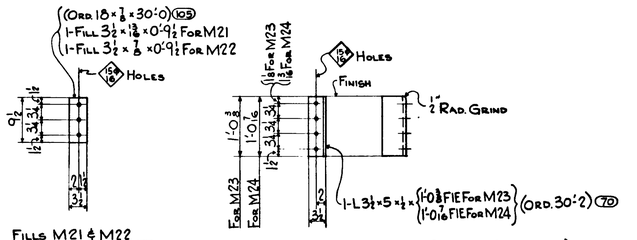

Fills M21 & M22

Stiffener Angles M23R & M24R (As Shown)

Stiffener Angles M23L & M24L (Opp Hand) Resp.

No. Req'd.	Description	Mark	Lot 1	Lot 2	Lot 3
Cont. CG 1899-3	8 Abutment Shoes	C1	4	4	
	4 do	C2	2	2	
	4 Pier Shoes	C3	2	2	
Cont. CG 1899-1	4 Top Cover Plates	M1			4
	4 Bott. Cover Plates	M2			4
	99 Fills	M3			99
	144 do	M4			144
	36 do	M5			36
	18 Stiffener Angles	M6R			18
	18 do	M6L			18
	72 do	M7R			72
	72 do	M7L			72
	24 Fills	M21			24
	6 do	M22			6
	3 Stiffener Angles	M23R			3
	3 do	M23L			3
	12 do	M24R			12
	12 do	M24L			12

General Notes

Structural Steel:~ A.S.T.M.~A7 (Copper Bearing)
Cast Steel:~ A.S.T.M.~A27~46T Grade 65~35 Full Annealed-Electric, Open Hearth or Crucible Process Steel.
Workmanship Specs:~ AREA~1947 & Specifications By The City Of Chicago, Department Of Public Works.
Shop & Foundry Insp:~ By H.P. Hagedorn 3100 So. Sacramento Ave., Chicago #23, Ill.
Fillets On Castings:~ All Fillets To Be ½" Rad. Max.
Finishing & Drilling:~ All Finishing & Drilling To Be Done By Bethlehem Steel Company.

Rivets None
Open Holes As Noted
Ream None
Finish See General Notes
Paint One Coat Of Red Lead As Per Specs., Except As Noted
Shop Contact Surfaces Not Painted

Approved for the Division of Bridges & Viaducts as to general arrangement and design but not field assembly, details or dimensions, unless so noted.
By W.F. Bohnhoff Date 8-3-50
Approved
Approved Assistant Bridge Engineer
Approved Asst. Chief Bridge & Viad Engineer
Approved Chief Bridge & Viad Engineer
Approved City Engineer

City of Chicago
Department of Public Works
Bureau of Engineering
Division of Bridges & Viaducts

West Irving Park Bridge
Over The
North Branch~Chicago River

John F. Beasley Const. Co. — Contractors
Subcontractors
Bethlehem Steel Co. — Fabricators

Abutment & Pier Shoes
Cover Plates
Fills & Stiffener Angles

Made By	Checked By	Traced By
M.M.G.	LG 5-8-50	

In Charge-Herb — Scale:
Contract No. CG 1899-1-3 Sheet No. 1
City Dwg No 17951 File No. 11-6.0-54

1660820066

A 8

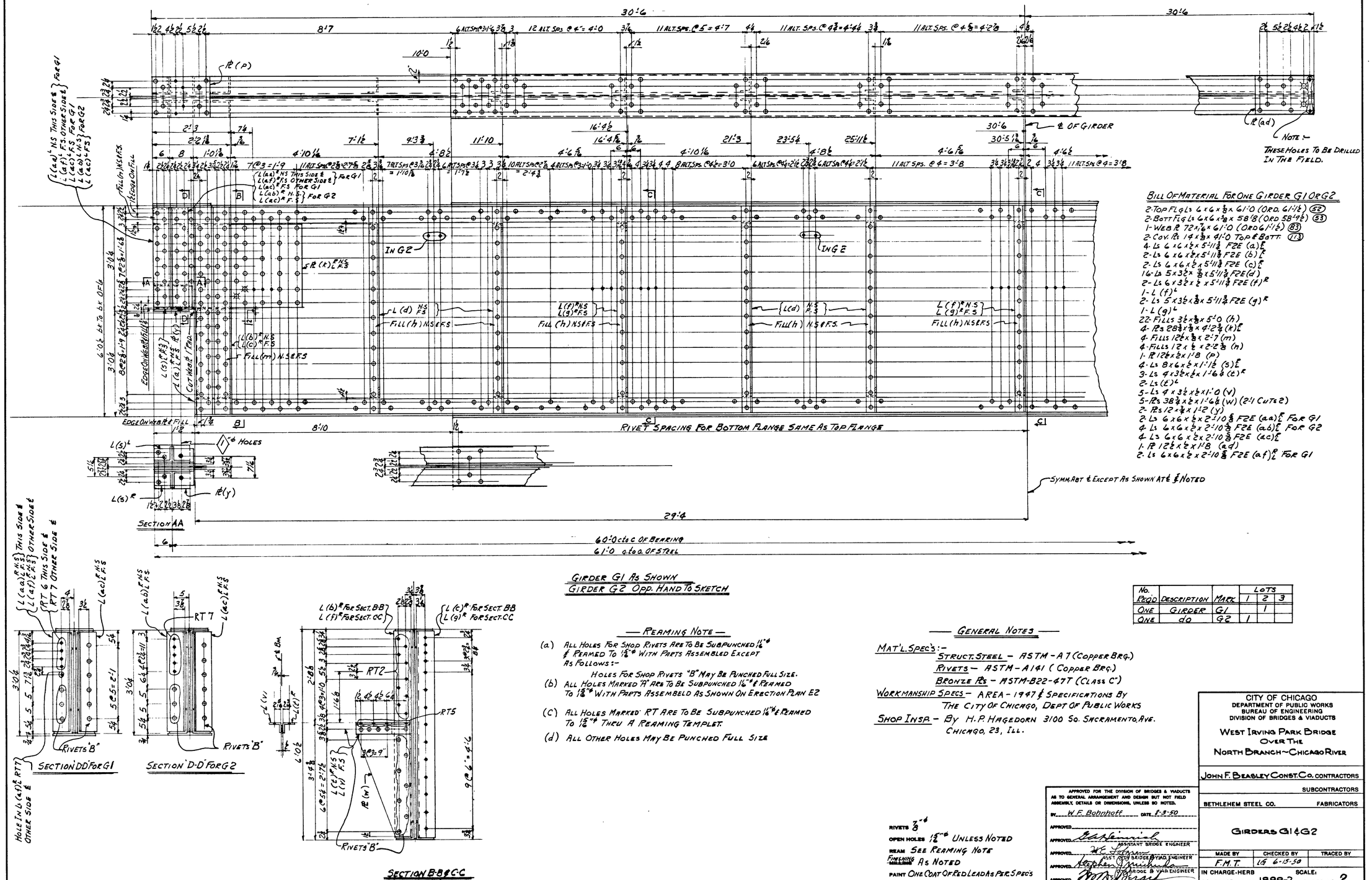

BILL OF MATERIAL FOR ONE GIRDER G1 OR G2

2-TOP FLG Ls 6 x 6 x 3/8 x 61'-0 (ORD. 61'-1 1/2") (S2)
2-BOTT FLG Ls 6 x 6 x 3/8 x 58'-8 (ORD 58'-9 1/2") (S3)
1-WEB PL 72 1/16 x 61'-0 (ORD 61'-1 1/2") (S3)
2-COV. PLs 14 x 3/8 x 41'-0 TOP & BOTT. (T3)
4-Ls 6 x 6 x 1/2 x 5'-11 3/8 F2E (a) ℄
2-Ls 6 x 6 x 1/2 x 5'-11 3/8 F2E (b) ℄
2-Ls 6 x 6 x 1/2 x 5'-11 3/8 F2E (c) ℄
16-Ls 5 x 3 1/2 x 3/8 x 5'-11 3/8 F2E (d)
2-Ls 6 x 3 1/2 x 1/2 x 5'-11 3/8 F2E (f) R
1-L (f) L
2-Ls 5 x 3 1/2 x 3/8 x 5'-11 3/8 F2E (g) R
1-L (g) L
22-FILLS 3 1/2 x 3/8 x 5'-0 (h)
4-PLs 28 3/4 x 3/8 x 9'-2 3/4 (k) ℄
4-FILLS 12 1/2 x 3/8 x 2'-7 (m)
4-FILLS 12 x 1/2 x 2'-2 3/8 (n)
1-PL 12 1/2 x 2 x 1'-8 (p)
4-Ls 8 x 6 x 1/2 x 1'-1 1/2 (s) ℄
3-Ls 9 x 3 1/2 x 1/2 x 1'-6 6 (t) R
2-Ls (t) L
5-Ls 9 x 3 1/2 x 1/2 x 1'-0 (v)
5-PLs 38 3/4 x 1/2 x 1'-6 1/4 (w) (2'-1 CUT TO 2)
2-PLs 12 x 7/8 x 1'-2 (y)
2-Ls 6 x 6 x 1/2 x 2'-10 3/8 F2E (aa) ℄ FOR G1
4-Ls 6 x 6 x 1/2 x 2'-10 3/8 F2E (a.b) ℄ FOR G2
4-Ls 6 x 6 x 1/2 x 2'-10 3/8 F2E (ac) ℄
1-PL 12 1/2 x 1/2 x 1'-8 (ad)
2-Ls 6 x 6 x 1/2 x 2'-10 3/8 F2E (af) ℄ FOR G1

No. REQD	DESCRIPTION	MARK	LOTS 1	2	3
ONE	GIRDER	G1		1	
ONE	do	G2	1		

— REAMING NOTE —

(a) ALL HOLES FOR SHOP RIVETS ARE TO BE SUBPUNCHED 1/16" ϕ & REAMED TO 1 1/8" ϕ WITH PARTS ASSEMBLED EXCEPT AS FOLLOWS:-
HOLES FOR SHOP RIVETS "B" MAY BE PUNCHED FULL SIZE.
(b) ALL HOLES MARKED "A" ARE TO BE SUBPUNCHED 1/16" ϕ & REAMED TO 1 1/8" ϕ WITH PARTS ASSEMBELD AS SHOWN ON ERECTION PLAN E2
(c) ALL HOLES MARKED "RT" ARE TO BE SUBPUNCHED 1/16" ϕ & REAMED TO 1 1/8" ϕ THRU A REAMING TEMPLET.
(d) ALL OTHER HOLES MAY BE PUNCHED FULL SIZE

— GENERAL NOTES —

MAT'L. SPEC'S:-
STRUCT. STEEL - ASTM-A7 (COPPER BRG.)
RIVETS - ASTM-A141 (COPPER BRG.)
BRONZE PLS - ASTM-B22-47T (CLASS C)
WORKMANSHIP SPECS - AREA-1947 & SPECIFICATIONS BY THE CITY OF CHICAGO, DEPT OF PUBLIC WORKS
SHOP INSP. - BY H.P. HAGEDORN 3100 So. SACRAMENTO AVE. CHICAGO, 23, ILL.

RIVETS 7/8" ϕ
OPEN HOLES 1 1/8" ϕ UNLESS NOTED
REAM SEE REAMING NOTE
FINISHING AS NOTED
PAINT ONE COAT OF RED LEAD AS PER SPEC'S
SHOP CONTACT SURFACES NOT PAINTED

APPROVED FOR THE DIVISION OF BRIDGES & VIADUCTS AS TO GENERAL ARRANGEMENT AND DESIGN BUT NOT FIELD ASSEMBLY, DETAILS OR DIMENSIONS, UNLESS SO NOTED.
BY W.F. Bohnhoff DATE 1-3-50
APPROVED
APPROVED ASSISTANT BRIDGE ENGINEER
APPROVED ASST. CHIEF BRIDGE & VIAD. ENGINEER
APPROVED CHIEF BRIDGE & VIAD ENGINEER
APPROVED CITY ENGINEER

CITY OF CHICAGO
DEPARTMENT OF PUBLIC WORKS
BUREAU OF ENGINEERING
DIVISION OF BRIDGES & VIADUCTS

WEST IRVING PARK BRIDGE OVER THE NORTH BRANCH-CHICAGO RIVER

JOHN F. BEASLEY CONST. CO. CONTRACTORS
SUBCONTRACTORS
BETHLEHEM STEEL CO. FABRICATORS

GIRDERS G1 & G2

MADE BY	CHECKED BY	TRACED BY
F.M.T.	LG 6-15-50	

IN CHARGE-HERB SCALE:
CONTRACT NO. CG 1899-2 SHEET NO. 2
CITY DWG No. 17952 FILE NO. 11-6-0-55

1660820067

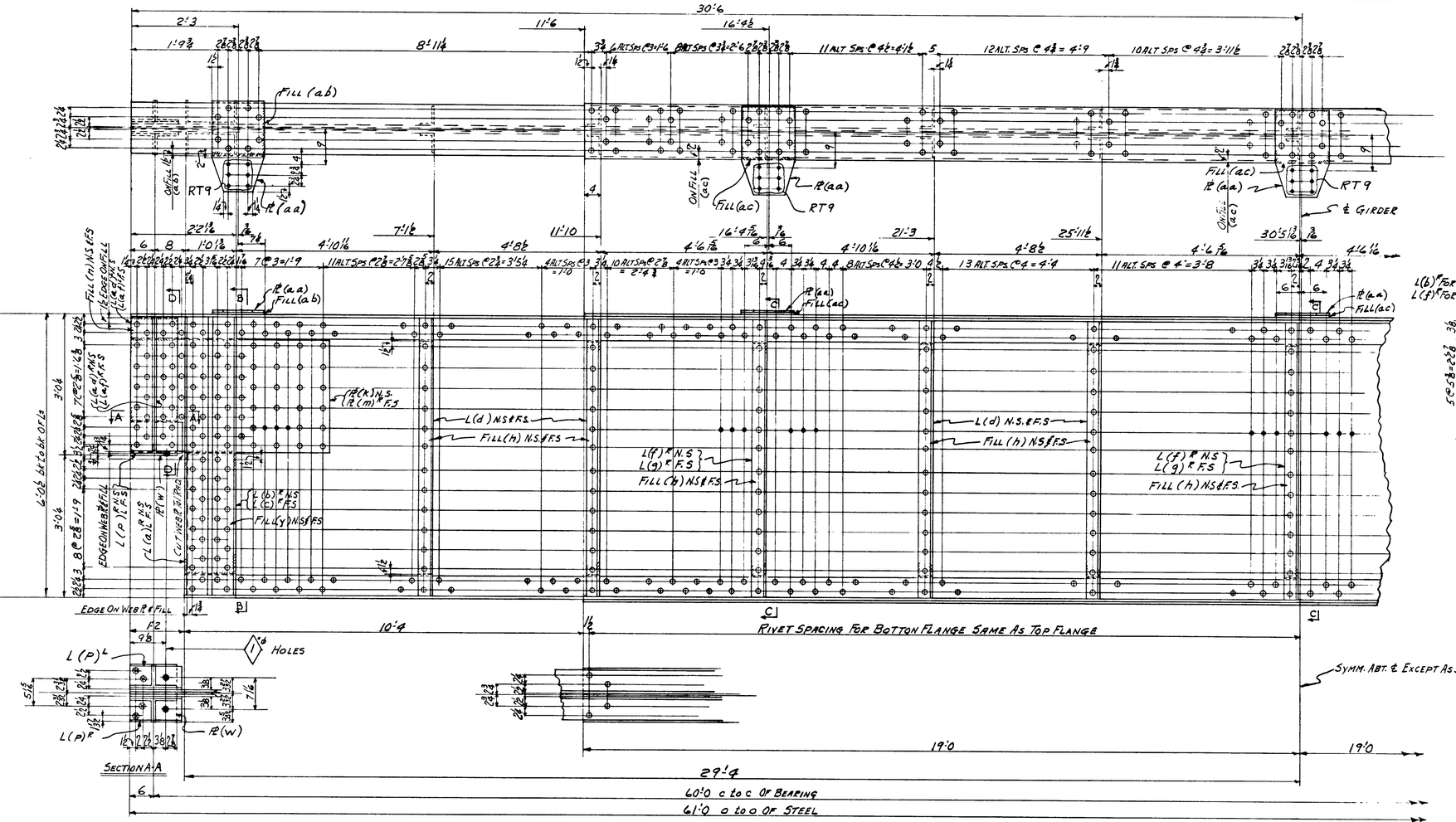

GIRDER G3 R AS SHOWN
GIRDER G3 L OPP. HAND

No. Reqd	Description	Mark	Lots 1	2	3
One	Girder	G3 R		1	
One	do	G3 L	1		

Bill of Material for One Girder G3 R or G3 L

2-Ls 6"x6"x½"x61'-0 Top Flg (Ord. 61'-1½") (48)
2-Ls 6"x6"x½"x58'-8 Bott. Flg. (Ord. 58'-9½") (47)
1-Web R 72"x7/16"x61'-0 (Ord. 61'-1½") (83)
2-Cov Pls 14"x⅜"x38'-0 (14) Top & Bott.
4-Ls 6"x6"x½"x5'-11½" F2E (a) R
2-Ls 6"x6"x½"x5'-11½" F2E (b) R
2-Ls 6"x6"x½"x5'-11½" F2E (c) L
16-Ls 3½"x5"x⅜"x5'-11½" F2E (d)
2-Ls 3½"x5"x½"x5'-11½" F2E (f) R
2-Ls 3½"x6"x½"x5'-11½" F2E (g) R
22-Fills 3½"x½"x5'-0 (h)
2-R 28¾"x½"x4'-2 3/8 (k)
2-R 28¾"x½"x4'-2¾ (m) R
4-Fills 12"x½"x2'-2⅜ (n)
4-Ls 8"x6"x½"x1'-1⅜" (P) L
3-Ls 4"x3½"x½"x14'-6¼" (s) R
2-Ls (s) L
5-Ls 4"x3½"x½"x1'-0 (e)
5-R 38⅜"x½"x1'-6¼" (v) (2'-1 cuts 2)
2-R 12"x⅜"x1'-2 (w)
4-Fills 12"x½"x2'-7 (y)
5-R 13⅜"x⅜"x1'-10½" (a a)
2-Fills 13⅜"x⅜"x1'-1" (a b)
3-Fills 13⅜"x⅜"x1'-1½" (a c)
4-Ls 6"x6"x½"x2'-10½" F2E (a d) R
4-Ls 6"x6"x½"x2'-10½" F2E (a f) L
1-L (f) L
1-L (g) L

FOR GENERAL NOTES SEE SHEET #2

RIVETS 7/8"ϕ
OPEN HOLES 15/16"ϕ UNLESS NOTED
REAM SEE REAMING NOTE ON SHEET #2
MISSING FINISHING AS NOTED
PAINT ONE COAT OF RED LEAD AS PER SPEC'S
SHOP CONTACT SURFACES NOT PAINTED

APPROVED FOR THE DIVISION OF BRIDGES & VIADUCTS AS TO GENERAL ARRANGEMENT AND DESIGN BUT NOT FIELD ASSEMBLY, DETAILS OR DIMENSIONS, UNLESS SO NOTED.
BY W. F. Bohnhoff DATE 8-3-50
APPROVED
APPROVED ASSISTANT BRIDGE ENGINEER
APPROVED ASST. CHIEF BRIDGE & VIAD ENGINEER
APPROVED CHIEF BRIDGE & VIAD ENGINEER
CITY ENGINEER

CITY OF CHICAGO
DEPARTMENT OF PUBLIC WORKS
BUREAU OF ENGINEERING
DIVISION OF BRIDGES & VIADUCTS

WEST IRVING PARK BRIDGE OVER THE NORTH BRANCH – CHICAGO RIVER

JOHN F. BEASLEY CONST. CO CONTRACTORS
SUBCONTRACTORS
BETHLEHEM STEEL CO. FABRICATORS

GIRDER G3

MADE BY	CHECKED BY	TRACED BY
F.M.T.	N.L. 6-16-50	

IN CHARGE-HERB SCALE:
CONTRACT NO. CG 1899-2 SHEET NO. 3
CITY DWG. NO. 17953 FILE NO. 11-6-0:56

1660820068

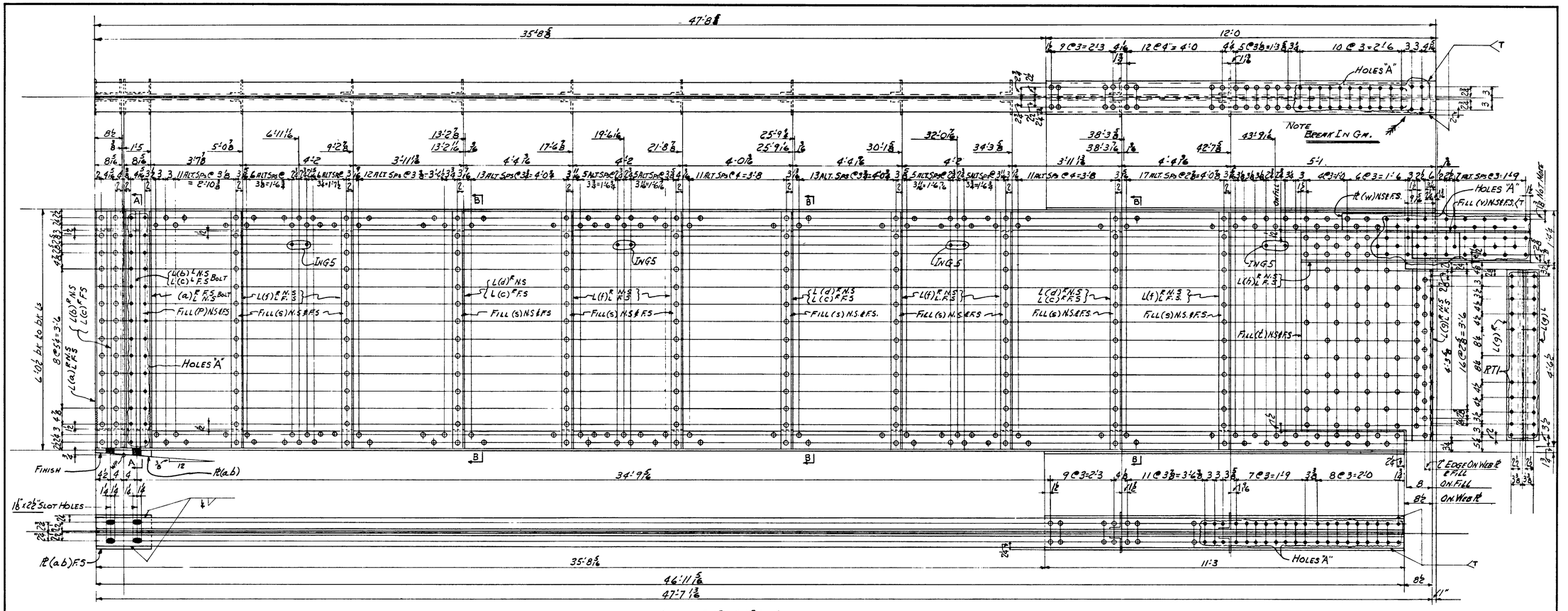

GIRDER G4R & G5R AS SHOWN
GIRDER G4L & G5L OPP. HAND

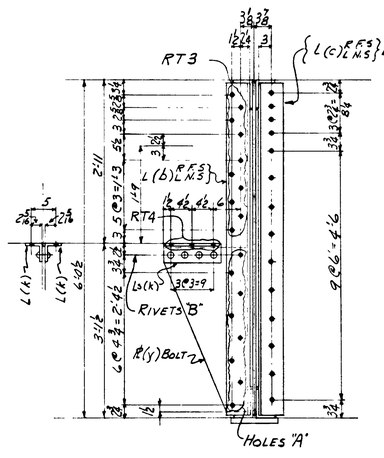

SECTION A-A

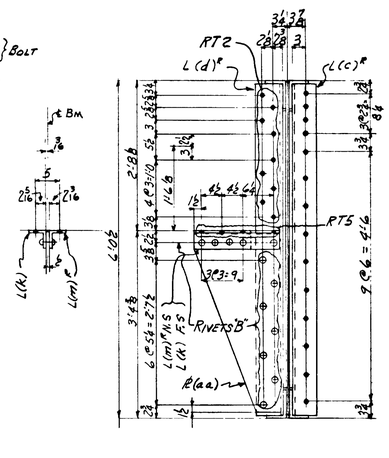

SECTION BB

BILL OF MATERIAL FOR ONE GIRDER G4R OR G5R

2- TOP FLGLS 6x4x5/8x47'-8 5/8 (ORD 47'-10 1/2) (57)
2- BOTT. FLGLS 6x4x5/8x46'-11 5/16 (ORD 47'-1 1/2) (58)
1- WEB. PL 72x7/16x47'-8 5/8 (ORD 47'-10 1/2) (85)
1- TOP COV. PL 10x1/2x12'-0 (124) <T
1- BOTT COV. PL 10x1/2x11'-3 (125) <T
4- LS 5x3 1/2x1/2x5'-11 1/4 F2E (a) R BOLT 2
2- LS 5x3 1/2x1/2x5'-11 1/4 F2E (b) L BOLT 1
4- LS 5x3 1/2x1/2x5'-11 1/4 F2E (c) R
1- L(c) L BOLT
3- LS 6x3 1/2x1/2x5'-11 1/4 F2E (d) R
14- LS 5x3 1/2x3/8x5'-11 1/4 F2E (f) L
2- LS 6x4x5/8x4'-3 5/8 (g) L
2- LS 9x4x1/2x5'-8 1/2 (h) L
5- LS 4x3 1/2x1/2x1'-0 (K)
3- LS 4x3 1/2x1/2x1'-6 1/4 (m) R
2- FILLS 17x5/8x5'-0 (P)
20- FILLS 3 1/2x5/8x5'-0 (S)
2- FILLS 63x5/8x3'-3 (t)
2- FILLS 8x1/4x1'-2 1/2 (v)
2- PLS 5x3/4x4'-8 1/2 (w)
1- PL 35 3/4x3/8x1'-6 (y) (2'-1 CUTS 2) BOLT
3- PLS 38 3/4x1/2x1'-6 1/4 (aa) (2'-1 CUTS 2)
1- BEV. PL 17x1/2x1'x0'-10 F.I.S. (ab) WELD

No. REQ'D	DESCRIPTION	MARK	LOT 1	LOT 2	LOT 3
ONE	GIRDER	G4R		1	
ONE	do	G4L		1	
ONE	do	G5R	1		
ONE	do	G5L	1		

FOR GENERAL NOTES SEE SHEET #2

RIVETS 7/8"ϕ
OPEN HOLES 1 5/16"ϕ UNLESS NOTED
REAM SEE REAMING NOTE ON SHT. #2
FINISHING AS NOTED
PAINT ONE COAT OF RED LEAD AS PER SPEC'S.
SHOP CONTACT SURFACES NOT PAINTED

APPROVED FOR THE DIVISION OF BRIDGES & VIADUCTS AS TO GENERAL ARRANGEMENT AND DESIGN BUT NOT FIELD ASSEMBLY, DETAILS OR DIMENSIONS, UNLESS SO NOTED.
BY W. F. Bohnhoff DATE 8-3-50
APPROVED
APPROVED G. A. Heinrich ASSISTANT BRIDGE ENGINEER
APPROVED J. E. Fofgren ASS'T CITY BRIDGE & VIAD ENGINEER
APPROVED [signature] CITY BRIDGE & VIAD ENGINEER
APPROVED [signature] CITY ENGINEER

CITY OF CHICAGO
DEPARTMENT OF PUBLIC WORKS
BUREAU OF ENGINEERING
DIVISION OF BRIDGES & VIADUCTS

WEST IRVING PARK BRIDGE OVER THE NORTH BRANCH ~ CHICAGO RIVER

JOHN F. BEASLEY CONST. CO. CONTRACTORS
SUBCONTRACTORS
BETHLEHEM STEEL CO. FABRICATORS

GIRDERS G4 & G5

MADE BY	CHECKED BY	TRACED BY
F.M.T.	LG 6-17-50	

IN CHARGE-HERB SCALE:
CONTRACT NO. CG 1899-2 SHEET NO. 4
CITY DWG NO. 17954 FILE NO. 11-6-0-57

1660820069

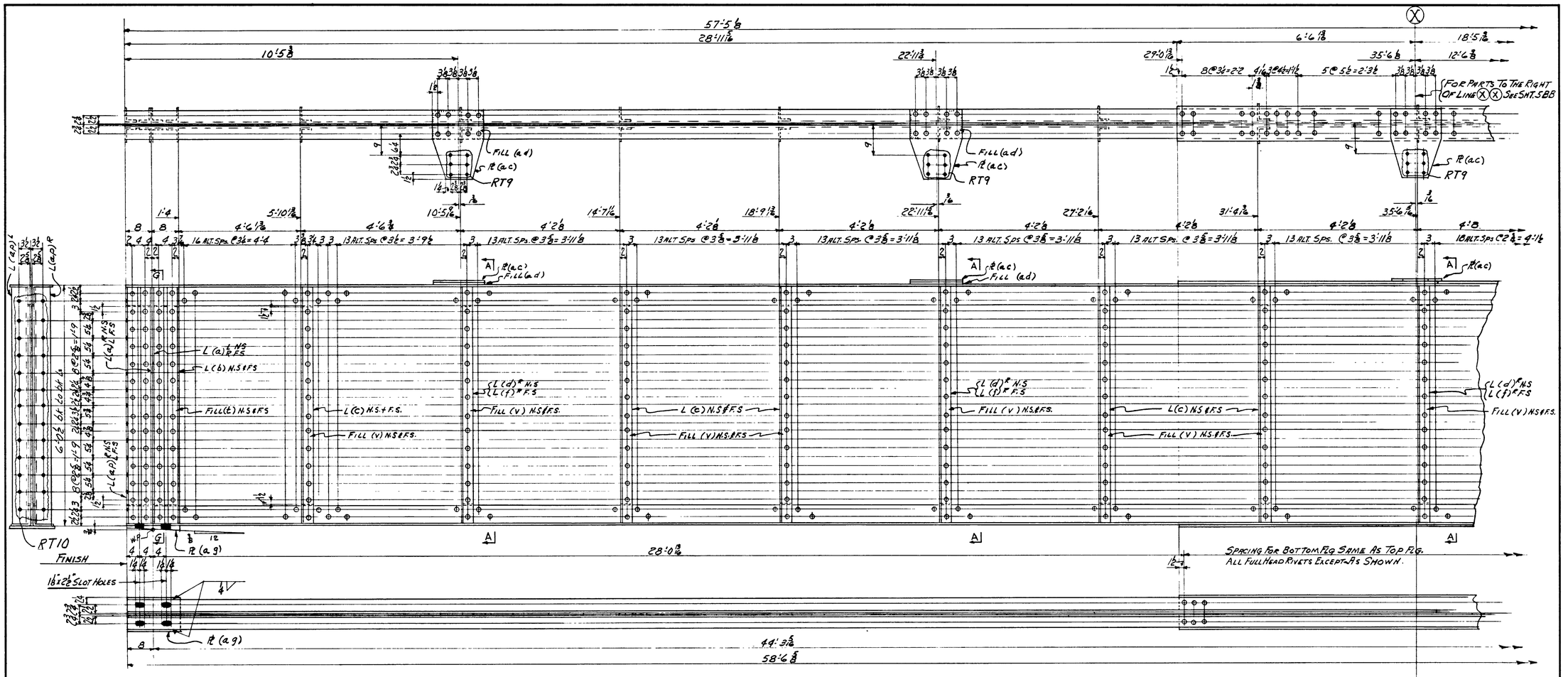

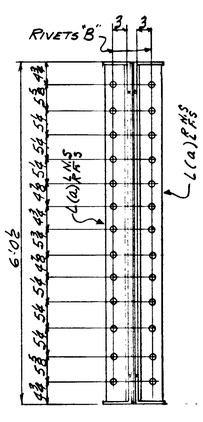

SECTION G-G

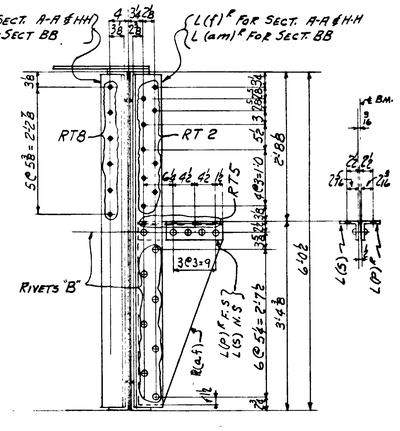

SECTION A-A & BB AS SHOWN
SECTION H-H OPP HAND TO SKETCH

GIRDER G6R & G7L AS SHOWN
GIRDER G6L & G7R OPP. HAND

BILL OF MATERIAL FOR ONE GIRDER G6R OR G7R

2-Top Flg. Ls 6 x 9 x 7/8 x 57'-5 5/8 F1E (ORD. 57'-7) (26)
2-Bott. Flg Ls 6 x 9 x 7/8 x 58'-6 3/8 F1E (ORD. 58'-8) (25)
1-Web R 72 x 7/16 x 58'-6 3/8 F1E (ORD 58'-8) (24)
2-Cov. Pl 10 x 5/8 x 25'-0 (21)
4-Ls 5 x 3 1/2 x 5/8 x 5'-11 1/4 F2E (a) R
2-Ls 5 x 3 1/2 x 1/2 x 5'-11 1/4 F2E (b)
14-Ls 5 x 3 1/2 x 3/8 x 5'-11 1/4 F2E (c)
4-Ls 5 x 3 1/2 x 1/2 x 5'-11 1/4 F2E (d) R
4-Ls 6 x 3 1/2 x 1/2 x 5'-11 1/4 F2E (f) R
3-Ls 6 x 6 x 1/2 x 5'-11 1/4 F2E (g) WELD 2
1-L 6 x 6 x 1/2 x 5'-11 1/4 F2E (h) R
4-Ls 6 x 6 x 1/2 x 2'-10 3/8 F2E (k) L
2-Ls 8 x 6 x 1/2 x 1'-1 1/2 F1E (m) L FOR G6
2-Ls 8 x 6 x 1/2 x 1'-1 1/2 F1E (n) L FOR G7
5-Ls 4 x 3 1/2 x 1/2 x 1'-6 1/4 (p) R
5-Ls 4 x 3 1/2 x 1/2 x 1'-0 (s)
2-Fills 16 x 5/8 x 5'-0 (t)
22-Fills 3 1/2 x 5/8 x 5'-0 (v)
2-Fills 20 x 5/8 x 5'-0 (w)
2-Fills 12 x 5/8 x 2'-7 (y)
2-Fills 12 x 1/2 x 2'-2 3/8 (a a)
2-Fills 29 x 5/8 x 9'-1 1/2 (a b)
5-R 15 1/2 x 3/8 x 1'-0 1/4 (a c)
3-Fill 15 1/2 x 5/8 x 0'-8 1/2 (a d)
5-R 38 7/8 x 1/2 x 1'-6 1/4 (a f) (2'-1 CUTS 2)
1-Bev. R 10 1/2 x 1/2 x 1'-4 F1S (a g) (WELD)
1-PHOS. BRONZE BEV. R 13 1/2 x 7/16 x 1 x 1'-2 1/2 F1S (a h) FOR G6 ORD. R.G. 53 000
1-PHOS. BRONZE BEV. R 13 1/2 x 9/16 x 1 x 1'-2 1/2 F1S (a k) FOR G7 ORD RG. 53 000
1-L 6 x 6 x 1/2 x 5'-11 1/4 F2E (a m) R
1-L 6 x 6 x 1/2 x 5'-11 1/4 F2E (a m) R
2 Ls 5 x 3 1/2 x 5/8 x 5'-11 1/4 F2E (a p) L

No. REQD	DESCRIPTION	MARK	LOT 1	LOT 2	LOT 3
ONE	GIRDER	G6R		1	
ONE	do	G6L	1		
ONE	do	G7R	1		
ONE	do	G7L		1	

FOR GENERAL NOTES SEE SHT. #2

RIVETS 7/8" ϕ.
OPEN HOLES 15/16" ϕ HOLES UNLESS NOTED
REAM SEE REAMING NOTE ON SHT. #2
SURFACING FINISHING AS NOTED
PAINT ONE COAT OF RED LEAD AS PER SPECS.
SHOP CONTACT SURFACES NOT PAINTED

APPROVED FOR THE DIVISION OF BRIDGES & VIADUCTS AS TO GENERAL ARRANGEMENT AND DESIGN BUT NOT FIELD ASSEMBLY, DETAILS OR DIMENSIONS, UNLESS SO NOTED.
BY W. F. Bohnhoff DATE 8-3-50
APPROVED
APPROVED
ASSISTANT BRIDGE ENGINEER
APPROVED
ASSISTANT BRIDGE & VIAD ENGINEER
APPROVED
CHIEF BRIDGE & VIAD ENGINEER
CITY ENGINEER

CITY OF CHICAGO
DEPARTMENT OF PUBLIC WORKS
BUREAU OF ENGINEERING
DIVISION OF BRIDGES & VIADUCTS

WEST IRVING PARK BRIDGE OVER THE NORTH BRANCH ~ CHICAGO RIVER

JOHN F. BEASLEY CONST. CO. CONTRACTORS
SUBCONTRACTORS
BETHLEHEM STEEL CO. FABRICATORS

GIRDERS G6 & G7

MADE BY	CHECKED BY	TRACED BY
F.M.T.	LG 6-19-50	

IN CHARGE-HERB SCALE:
CONTRACT NO. CG 1899-2 SHEET NO. 5AB
CITY DWG NO. 17955 FILE NO. 11-6-0-58

1660820070

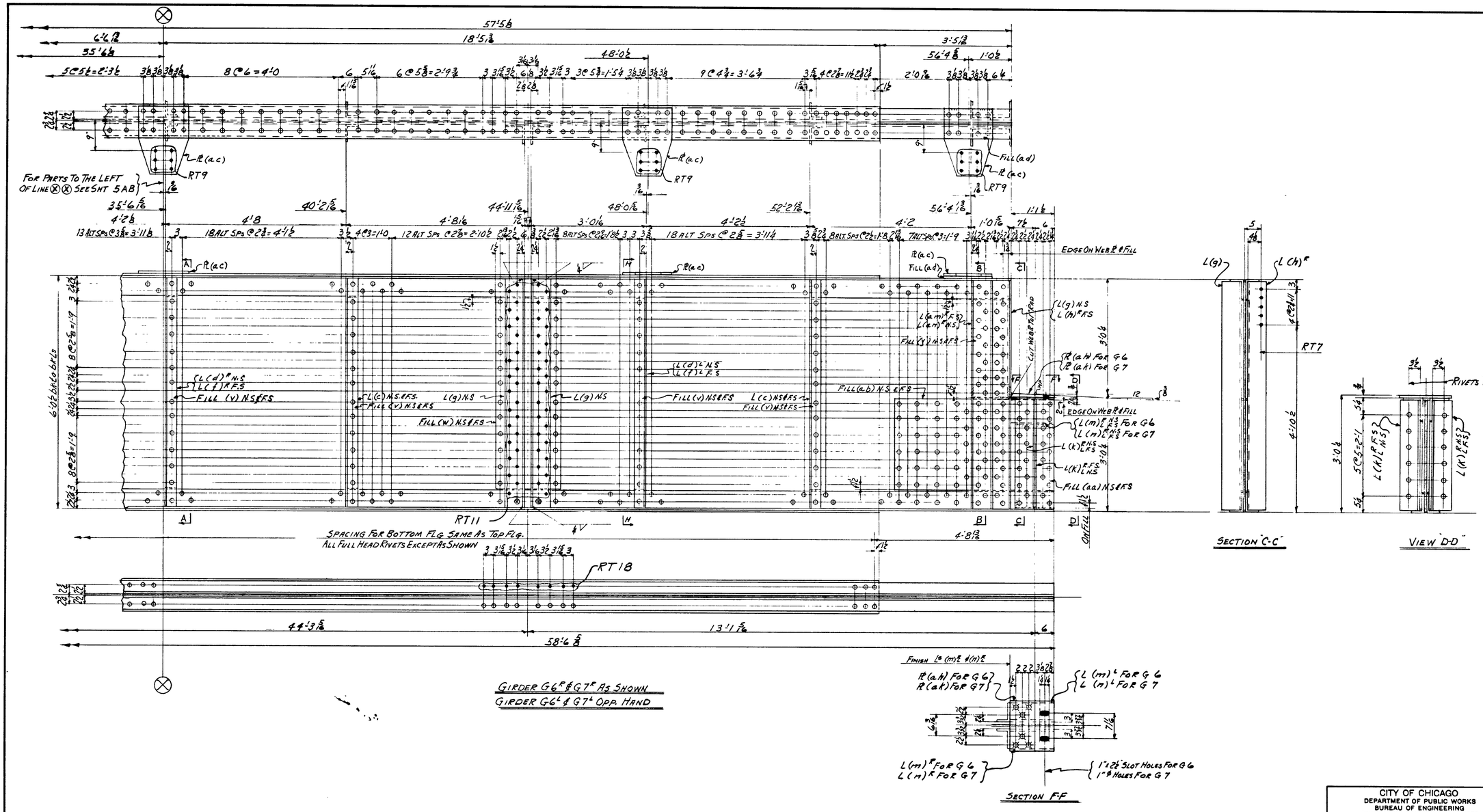

RIVETS
OPEN HOLES
REAM
MILLING
PAINT
} SEE SHEET 5AB

SHOP CONTACT SURFACES NOT PAINTED

APPROVED FOR THE DIVISION OF BRIDGES & VIADUCTS AS TO GENERAL ARRANGEMENT AND DESIGN BUT NOT FIELD ASSEMBLY, DETAILS OR DIMENSIONS, UNLESS SO NOTED.

BY W.F. Bohnhoff DATE 8-3-50

APPROVED

APPROVED Bicentennial ASSISTANT BRIDGE ENGINEER

APPROVED [illegible] ASST. CITY BRIDGE & VIAD ENGINEER

APPROVED Stephen Gardner CITY BRIDGE & VIAD ENGINEER

APPROVED [illegible] CITY ENGINEER

CITY OF CHICAGO
DEPARTMENT OF PUBLIC WORKS
BUREAU OF ENGINEERING
DIVISION OF BRIDGES & VIADUCTS

WEST IRVING PARK BRIDGE OVER THE NORTH BRANCH ~ CHICAGO RIVER

JOHN F. BEASLEY CONST. CO. CONTRACTORS

SUBCONTRACTORS

BETHLEHEM STEEL CO. FABRICATORS

GIRDERS G6 & G7

MADE BY	CHECKED BY	TRACED BY
F.M.T.	LG 6-19-50	

IN CHARGE-HERB SCALE

CONTRACT NO. CG 1899-2 SHEET NO. 5B

CITY DWG NO. 7956 FILE NO. 11-6-0-59

30

1660820071

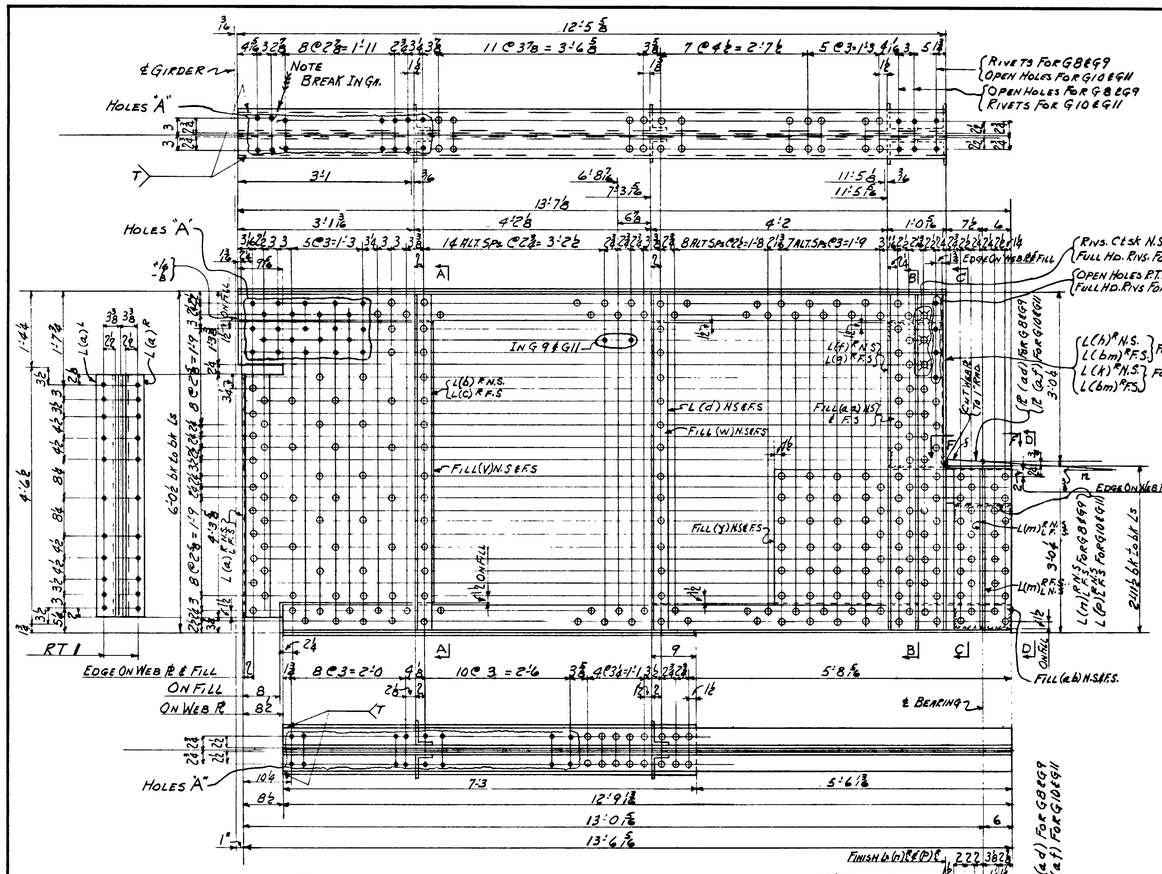

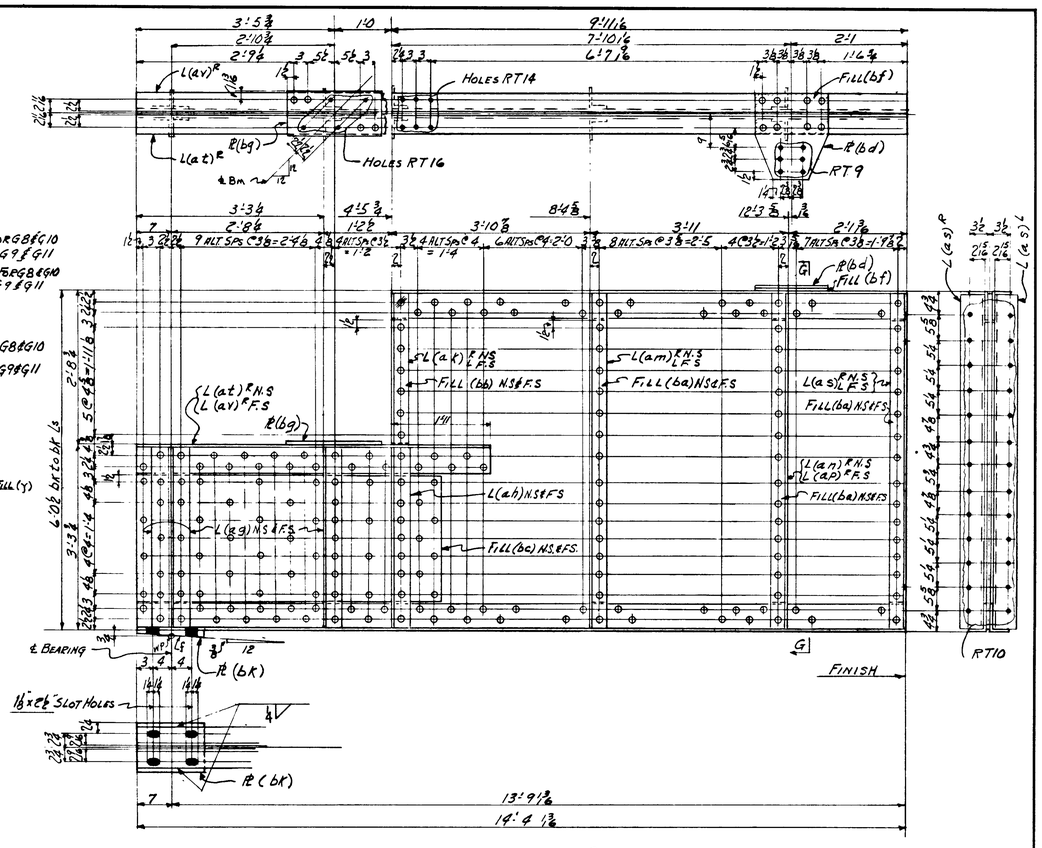

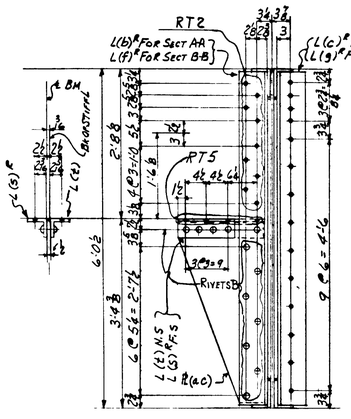

GIRDER G8 & G11 AS SHOWN. GIRDER G9 & G10 OPP. HAND TO SKETCH

BILL OF MATERIAL FOR ONE GIRDER G8-G9-G10 OR G11

2- TOP FLG ls 4 x 4 x ⅝ x 12'-5⅝ (ORD. 12'-7½) (41)
2- BOTT. FLGls 4 x 4 x ⅝ x 12'-9⅛ (ORD. 12'-11½) (40)
1- WEB R 72 x 7/16 x 13'-7⅛ (ORD. 13'-9) (84)
1- TOP COV R 10 x ½ x 12'-5⅝ (ORD 12'-5½) (123)
1- BOTT. COV R 10 x ½ x 7'-3 (ORD 14'-7) (122)
2- Ls 6 x 4 x ½ x 4'-3⅜ (a)L
1- L - 6 x 3½ x ½ x 5'-11¼ F2E (b)R
1- L - 5 x 3½ x ½ x 5'-11¼ F2E (c)R
2- Ls 5 x 3½ x ½ x 5'-11¼ F2E (d)
1- L 6 x 6 x ½ x 5'-11¼ F2E (f)R
1- L 6 x 6 x ½ x 5'-11¼ F2E (g)R
1- L 6 x 6 x ½ x 5'-11¼ F2E (h)R FOR GBBEG10
1- L 6 x 6 x ½ x 5'-11¼ F2E (k)R FOR G9EG11
4- Ls 6 x 6 x ½ x 2'-10⅜ F2E (m)L
2- Ls 8 x 6 x ½ x 1'-1½ FIE (n)R FOR GBBEG9
2- Ls 8 x 6 x ½ x 1'-1½ FIE (p)R FOR G10EG11
2- Ls 4 x 3½ x ½ x 1'-6¼ (s)R
2- Ls 4 x 3½ x ½ x 1'-0 (t)L
2- FILLS 43 x ⅜ x 3'-4⅜ (v)
2- FILLS 3½ x ⅜ x 5'-0 (w)
2- FILLS 29 x ½ x 1'-1⅜ (y)
2- FILLS 11⅜ x ⅜ x 2'-7 (aa)
2- FILLS 12 x ½ x 2'-2⅜ (ab)
2- PLS 38⅜ x ½ x 1'-6¼ (ac) (2 L CUTS 2)
1- PHOS. BRONZE BEV. R 13½ x 7/16 x 1 x 1'-2½ F1S (ad) FOR GBBEG9 ORD. RG. 53 000
1- PHOS. BRONZE BEV. R 13½ x 7/16 x 1 x 1'-2½ F1S (af) FOR G10EG11 ORD. RG. 53 000
1- L 6 x 6 x ½ x 5'-11¼ F2E (bm)R

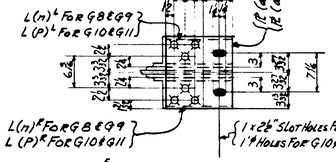

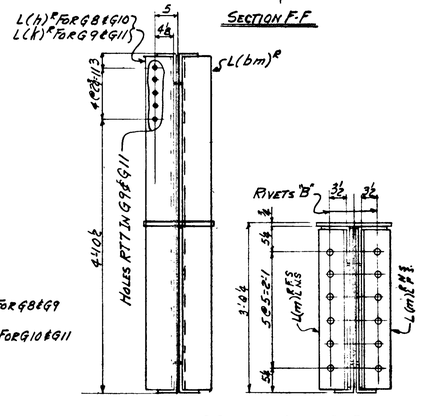

BILL OF MATERIAL FOR ONE GIRDER G12R

2- TOP FLG ls 6 x 4 x ⅝ x 9'-11⅛ FIE (ORD 10'-2) (63)
2- BOTT. FLGls 6 x 4 x ⅜ x 14'-4½ FIE (ORD 14'-7) (64)
1- WEB R 72 x 3/8 x 19'-4½ FIE (ORD 14'-7) (88)
6- Ls 4 x 4 x ½ x 3'-3 F2E (a g)
2- Ls 4 x 4 x ½ x 3'-3 F2E (a h)
2- Ls 5 x 3½ x ½ x 2'-8 F2E (a k)
2- Ls 5 x 3½ x ½ x 5'-11¼ F2E (am)
1- L 5 x 3½ x ½ x 5'-11¼ F2E (an)
1- L 4 x 3½ x ½ x 5'-11¼ F2E (ap)
2- Ls 5 x 3½ x ⅝ x 5'-11¼ F2E (as)
1- L 6 x 4 x ⅜ x 6'-4¾ (at)
1- L 6 x 4 x ⅜ x 6'-4¾ (av)
1- L 4 x 3½ x ½ x 1'-6¼ (aw)
1- L 4 x 3½ x ½ x 1'-0 (ay)
6- FILLS 3½ x ⅜ x 5'-0 (ba)
2- FILLS 3½ x ⅜ x 2'-2¼ (bb)
2- FILLS 27¼ x ⅜ x 5'-4¾ (bc)
1- PL 15½ x ⅜ x 1'-8¼ (bd)
1- FILL 15½ x ⅜ x 0'-8¼ (bf)
1- PL 9 x ⅜ x 1'-8 (bg)
1- PL 35⅜ x ½ x 1'-6¼ (bh) (2 L CUTS 2)
1- BEV. PL 10 x 5/16 x 3½ x 1'-2 F1S. (bk) WELD

GIRDER G12R AS SHOWN. GIRDER G12L OPP. HAND.

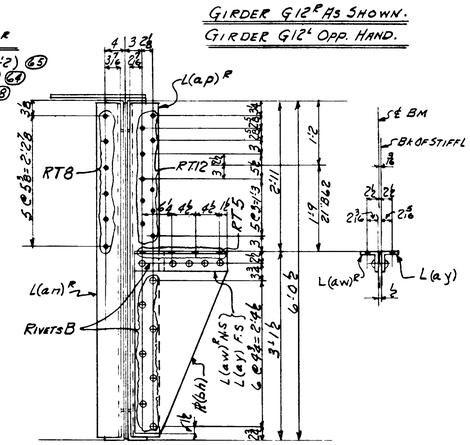

RIVETS B 7/8"ϕ
OPEN HOLES 15/16"ϕ UNLESS NOTED
REAM SEE REAMING NOTE ON SHT. #2 FOR FITTING AS NOTED
PAINT ONE COAT OF RED LEAD AS PER SPECS.
SHOP CONTACT SURFACES NOT PAINTED

FOR GENERAL NOTES SEE SHT. #2

No. REQD	DESCRIPTION	MARK	LOT 1	2	3
ONE	GIRDER	G8	1		
ONE	do	G9	1		
ONE	do	G10		1	
ONE	do	G11	1		
2	do	G12R	1	1	
2	do	G12L	1	1	

CITY OF CHICAGO
DEPARTMENT OF PUBLIC WORKS
BUREAU OF ENGINEERING
DIVISION OF BRIDGES & VIADUCTS

WEST IRVING PARK BRIDGE OVER THE NORTH BRANCH ~ CHICAGO RIVER

JOHN F. BEASLEY CONST. CO. CONTRACTORS
SUBCONTRACTORS
BETHLEHEM STEEL CO. FABRICATORS

APPROVED FOR THE DIVISION OF BRIDGES & VIADUCTS AS TO GENERAL ARRANGEMENT AND DESIGN BUT NOT FIELD ASSEMBLY, DETAILS OR DIMENSIONS, UNLESS SO NOTED.
BY W. F. Bohnhoff DATE 4-3-50
APPROVED
APPROVED ASSISTANT BRIDGE ENGINEER
APPROVED ASSOC. BRIDGE & VIAD ENGINEER
APPROVED CITY BRIDGE & VIAD ENGINEER
APPROVED CITY ENGINEER

GIRDERS G8-G9-G10-G11 & G12

MADE BY	CHECKED BY	TRACED BY
F.M.T.	N.L. 6-20-50	

IN CHARGE-HERB SCALE:
CONTRACT NO. CG 1899-2 SHEET NO. 6
CITY DWG NO. 17957 FILE NO. 11-6-0-60

1660820072

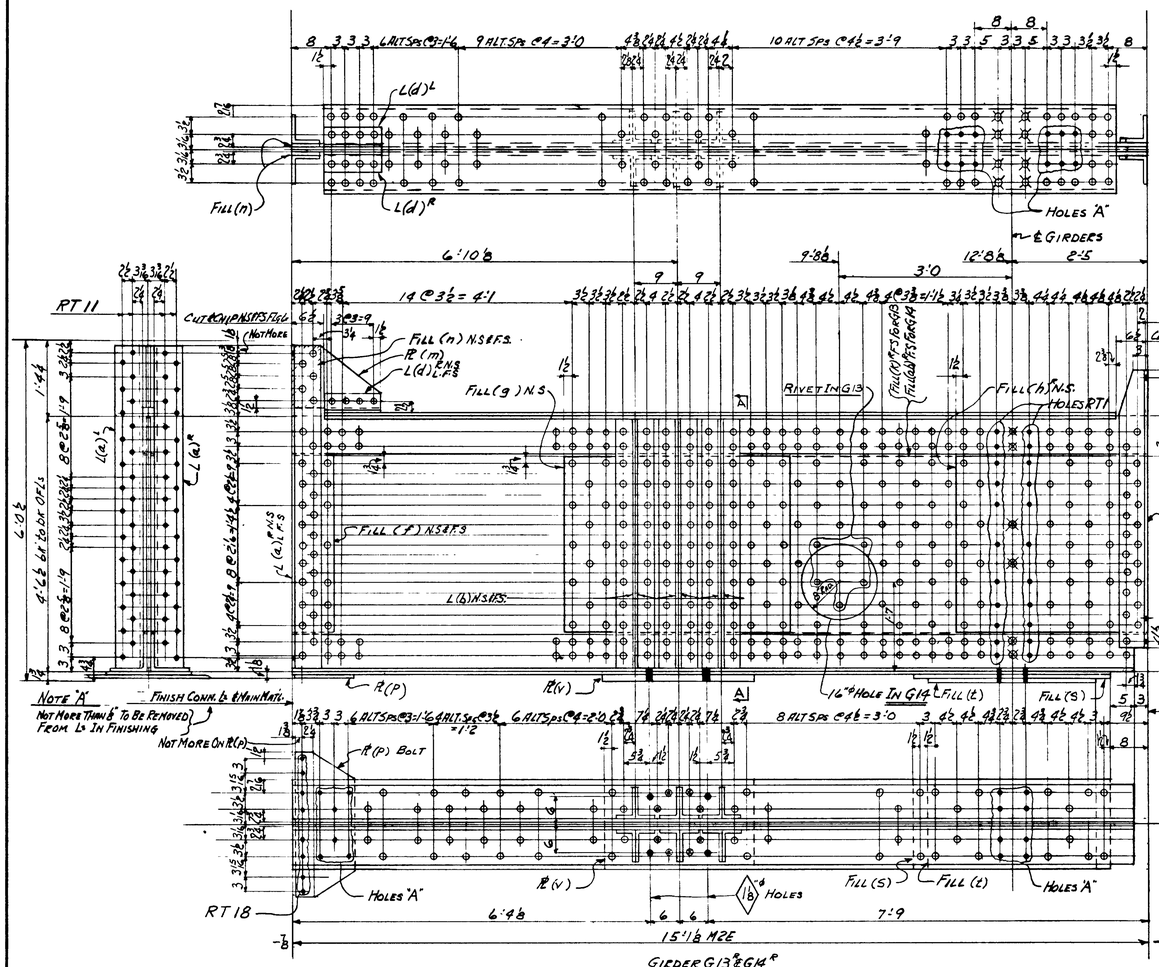

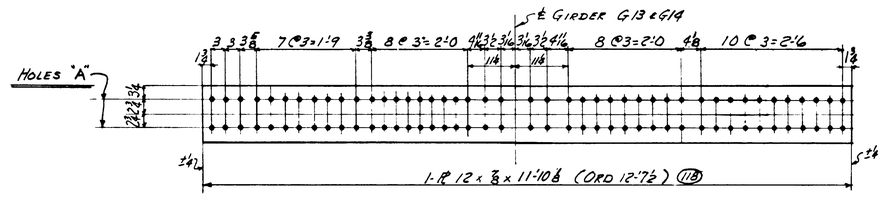

Splice Plate M13 (Bottom)

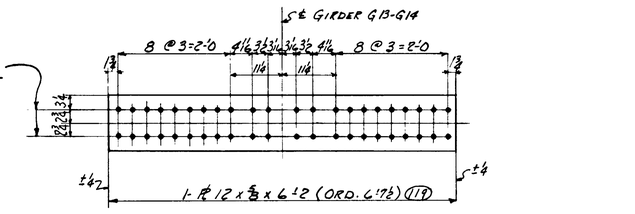

Splice Plate M14 (Bottom)

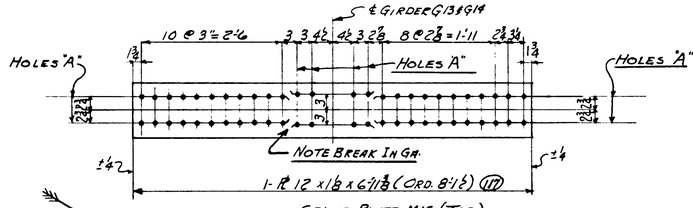

Splice Plate M15 (Top)

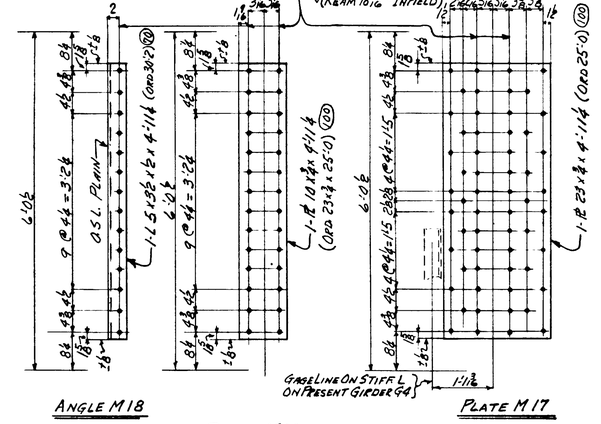

No. Req'd	Description	Mark	Lot 1	Lot 2	Lot 3
One	Girder	G13R		1	
One	do	G13L		1	
One	do	G14R	1		
One	do	G14L	1		
4	Splice Plates	M13	2	2	
4	do	M14	2	2	
4	do	M15	2	2	
4	Plates	M16	2	2	
4	do	M17	2	2	
4	Angles	M18	2	2	
8	Brackets	M19	4	4	

Bill Of Material For One Girder G13R Or G14L

4-Top & Bott. Flg Ls 8"x8"x⅞"x 15'-1⅛ F2E (Ord 15'-3) (36)
1-Web PL 54"x⅜"x 15'-1⅛ F2E (Ord 15'-3) (98)
1-Top Cov. PL 18"x⅝"x 14'-0⅜ (Ord 14'-3) (107)
1-Bott. Cov. PL 18"x⅝"x 14'-5⅜ F1E (Ord 14'-9) (106)
2-Ls 6"x6"x⅝"x 5'-9 F1E (a) L
12-Ls 7"x4"x½"x 4'-5⅛ F2E (b)
2-Ls 6"x4"x⅝"x 4'-11 (c) L
2-Ls 4"x4"x½"x 1'-0 (d) L
2-Fills 9"x⅜"x 3'-2 (f)
1-Fill 38"x⅜"x 3'-11 (g)
1-Fill 38"x⅜"x 3'-4⅞ (h) R
1-Fill 38"x⅜"x 10'-2¾ (k) R For G13
1-PL 13⅛"x ⅜"x 1'-4⅛ (m) (2-4 Cuts 2)
2-Fills 6"x ⅜"x 1'-1½ (m)
1-PL 30"x½"x 1'-0⅜ (P) Bolt
1-Fill 18"x⅜"x 3'-6 (s)
1-Fill 18"x⅜"x 3'-0 (t)
1-Bev. PL 18"x⅞"x1⅛"x 2'-8 F1S (v)
1-Fill 38"x⅝"x 10'-2¾ (ab) R For G14

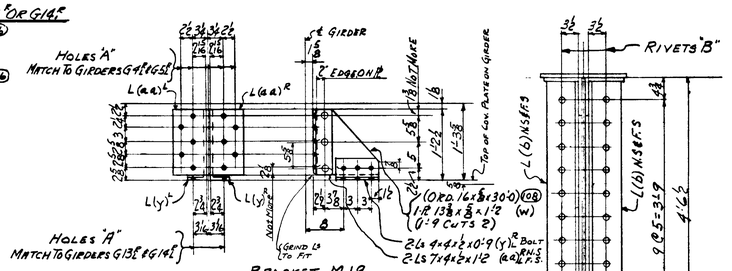

Bracket M19

Shop Note:-
Brackets M19 Are To Be Shop Assembled: Angles (aa) L To Girders G4 L & G5 L And Angles (y) To Girders G13L & G14R For Reaming Of Holes "A" Match Mark Suffix Is To Be Added To Each Bracket, After Reaming, As Shown On Erection Plan E2.

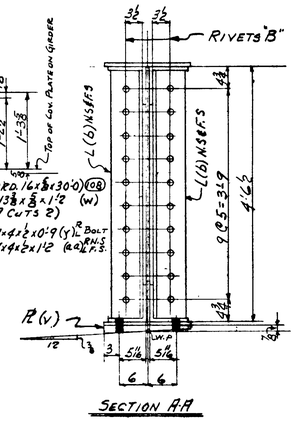

Section A-A

Shop Note:-
Splice PLs M13, M14 & M15 Are To Be Shop Assembled With Girders G8-G9-G10 & G11, Detailed On Sheet #6 And Girders G4 L & G5 L Detailed On Sheet #5, And Match Marked After Holes Are Reamed To Size. For Proper Match Mark Suffix See Erection Plan E2.
Splice PLs M13 & M14 Are Also To Be Shop Assembled To Bottom Flange Of Girders G13L & 14L In Accordance With Match-Marking Shown On Sheet E2 And Holes Reamed To Size.

Rivets ⅞" ϕ
Open Holes 15/16" Unless Noted
Ream See Reaming Note On Sht. #2
Finishing As Noted.
Paint One Coat Of Red Lead As Per Specs.
Shop Contact Surfaces Not Painted

For General Notes See Sht #2

Approved for the Division of Bridges & Viaducts as to general arrangement and design but not field assembly, details or dimensions, unless so noted.
By W. F. Bohnhoff Date 4-3-50
Approved
Approved Assistant Bridge Engineer
Approved Assistant Bridge & Viad. Engineer
Approved Bridge & Viad. Engineer
Approved City Engineer

City of Chicago
Department of Public Works
Bureau of Engineering
Division of Bridges & Viaducts

West Irving Park Bridge Over The North Branch - Chicago River

John F. Beasley Const. Co. Contractors
Subcontractors
Bethlehem Steel Co. Fabricators

Girders G13 & G14
Splice Plates, Angles & Brackets

Made By	Checked By	Traced By
F.M.T.	N.L. 6-21-50	

In Charge-Herb Scale:
Contract No. CG 1899-2 Sheet No. 7
City Dwg No. 17958 File No. 126-0-61

1660820073

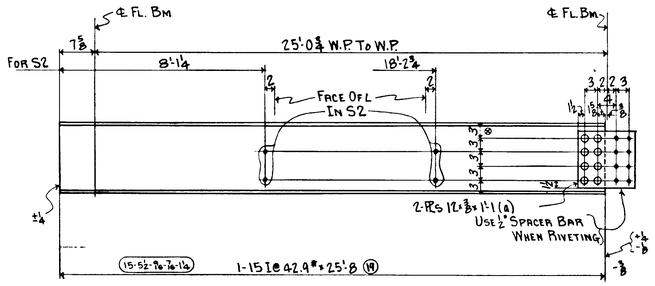

STRINGERS S1 & S2

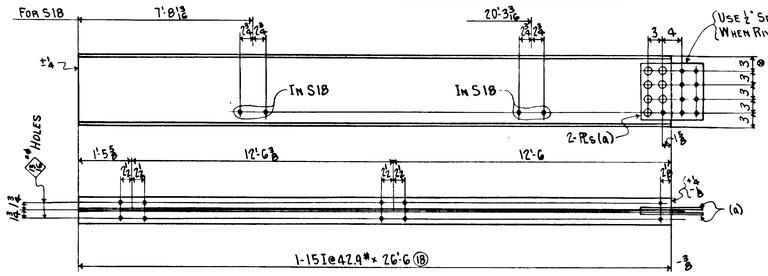

STRINGER S17 & S18

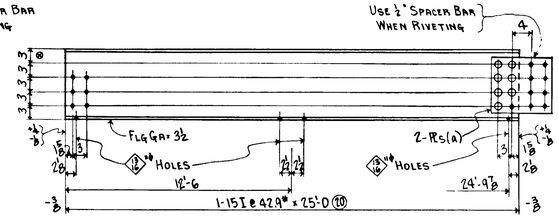

STRINGER S19

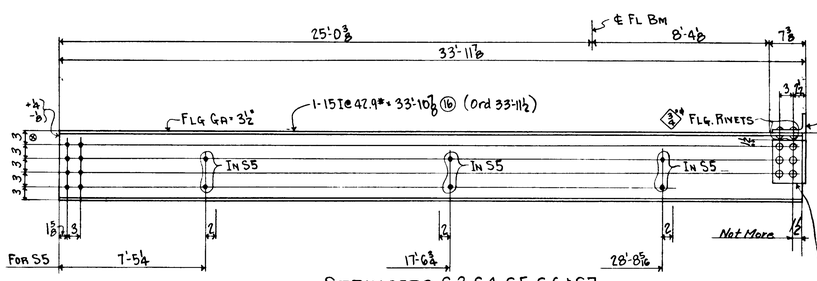

STRINGERS S3, S4, S5, S6 & S7

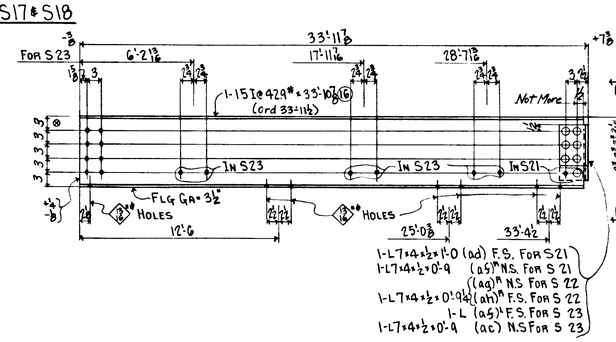

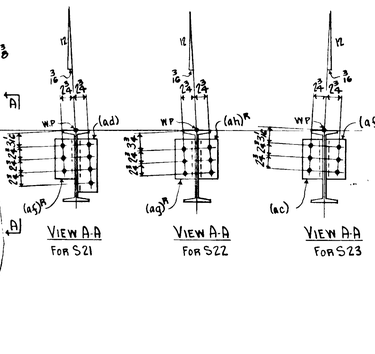

STRINGERS S21, S22R & S23 (AS SHOWN)
STRINGER S22L (OPP HAND TO S22R)

No Req'd	Description	Mark	Lot 1	Lot 2	Lot 3
14	Stringer	S 1			14
4	do	S 2			4
One	do	S 3			1
2	do	S 4			2
2	do	S 5			2
2	do	S 6			2
2	do	S 7			2
One	do	S 8			1
2	do	S 9			2
2	do	S 10			2
2	do	S 11			2
2	do	S 12			2
1	do	S 13			1
2	do	S 14			2
1	do	S 15			1
2	do	S 16			2
2	do	S 17		2	
2	do	S 18	2		
4	do	S 19	2	2	
One	do	S 21	1		
One	do	S 22R		1	
One	do	S 22L	1		
One	do	S 23	1		
One	do	S 24	1		
One	do	S 25R	1		
One	do	S 25L	1		
One	do	S 26	1		

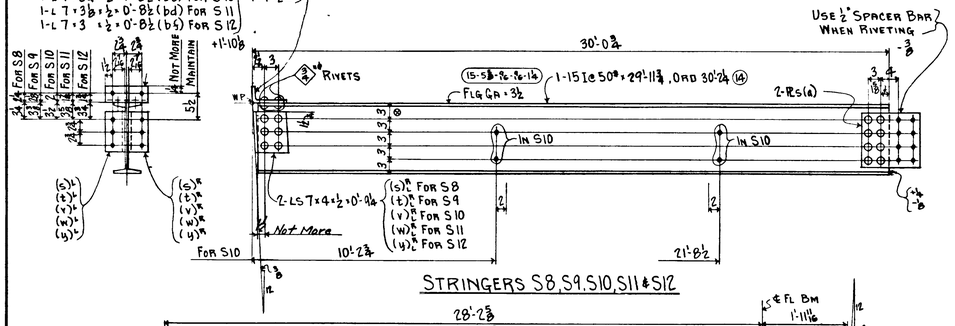

STRINGERS S8, S9, S10, S11 & S12

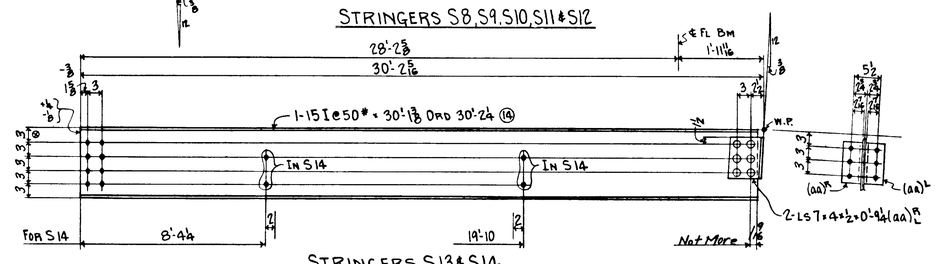

STRINGERS S13 & S14

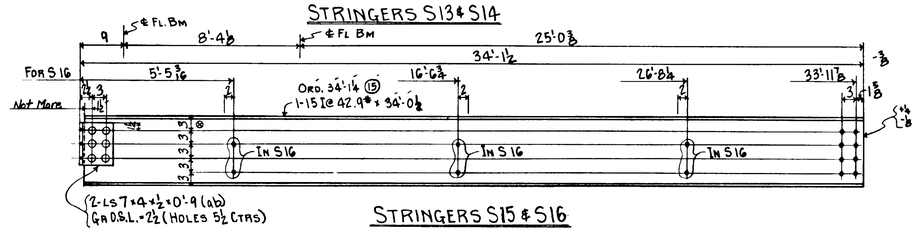

STRINGERS S15 & S16

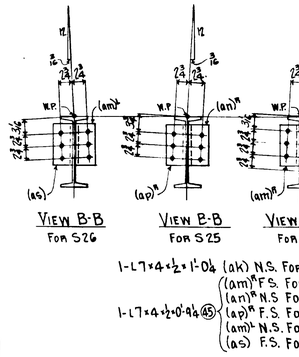

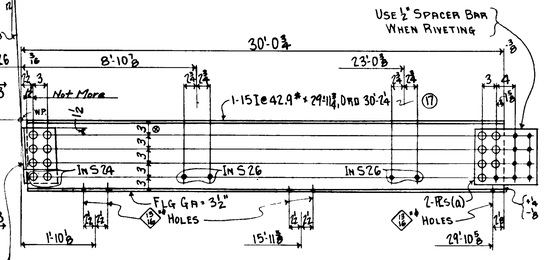

STRINGERS S24, S25R & S26 (AS SHOWN)
STRINGER S25L (OPP HAND TO S25R)

General Notes

Material Specs:~ Structural Steel, A.S.T.M.-A7 (Copper Bearing) Rivets ~ A.S.T.M.-A141 (Copper Bearing)

Shop Inspection:~ By H.P. Hagedorn 3100 So. Sacramento Ave., Chicago #23, Ill

Workmanship Specs:~ A.R.E.A ~ 1947 & Specifications By The City Of Chicago - Dept. Of Public Works

Welding Spec's:~ Current Standard A.W.S. Spec's For Welded Highway & Railroad Bridges.

Rivets 7/8" Unless Noted
Open Holes 15/16" Unless Noted
Ream None
Milling None
Paint One Coat Of Red Lead As Per Specs.
Shop contact surfaces not painted

Approved for the Division of Bridges & Viaducts as to general arrangement and design but not field assembly, details or dimensions, unless so noted.

By W.F. Bohnhoff Date 8-3-50

Approved _____ Assistant Bridge Engineer

Approved _____ Assistant Bridge & Viad Engineer

Approved _____ Bridge & Viaid Engineer

Approved _____ City Engineer

CITY OF CHICAGO
DEPARTMENT OF PUBLIC WORKS
BUREAU OF ENGINEERING
DIVISION OF BRIDGES & VIADUCTS

West Irving Park Bridge Over The North Branch ~ Chicago River

John F. Beasley Const. Co — Contractors
Subcontractors
Bethlehem Steel Co. — Fabricators

Stringers

Made By	Checked By	Traced By
HMB	LG 6-12-50	

In Charge-Herb — Scale:
Contract No. CG 1899-2 — Sheet No. 8
City Dwg No. 7959 — File No. 11-6-0-62

1660820074

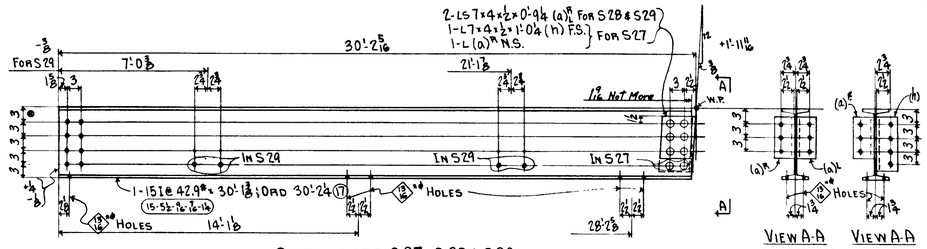

STRINGERS S27, S28 & S29

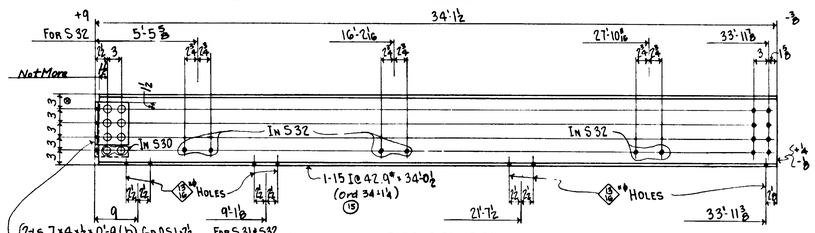

STRINGERS S30, S31 & S32

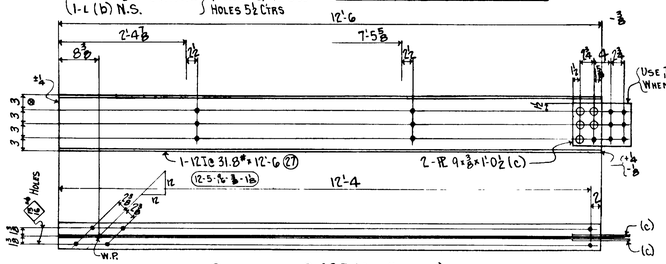

STRINGER S33ᴿ (AS SHOWN)
STRINGER S33ᴸ (OPP HAND)

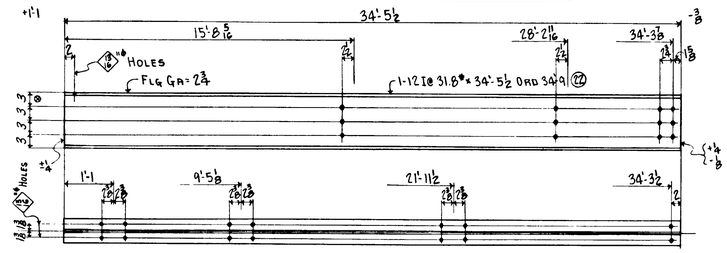

STRINGER S38

STRINGER S34

STRINGER S35ᴿ (AS SHOWN)
STRINGER S35ᴸ (OPP HAND)

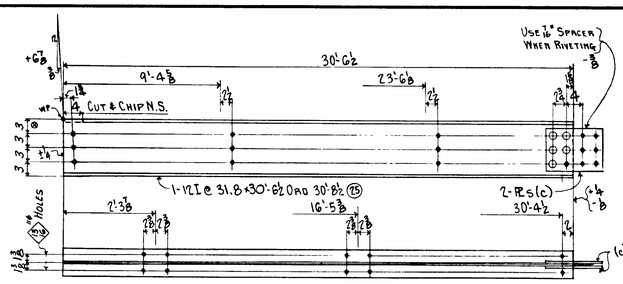

STRINGER S36ᴿ (AS SHOWN)
STRINGER S36ᴸ (OPP HAND)

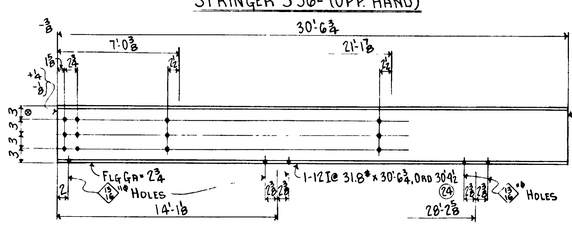

STRINGER S37

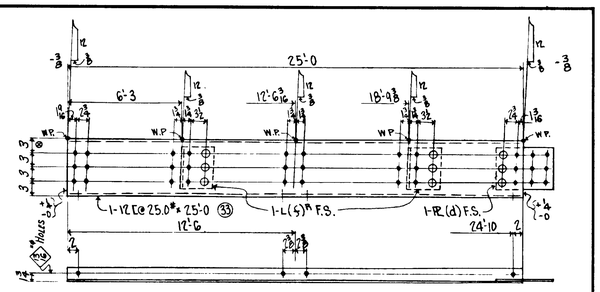

STRINGER S40ᴿ (AS SHOWN)
STRINGER S40ᴸ (OPP HAND)

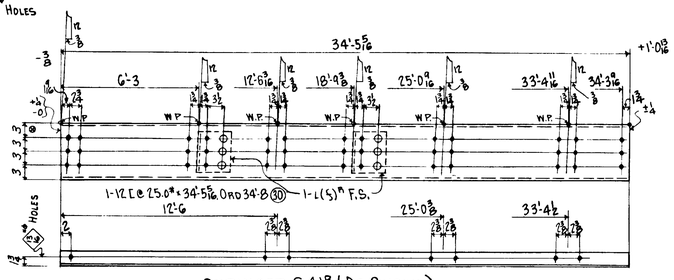

STRINGER S41ᴿ (AS SHOWN)
STRINGER S41ᴸ (OPP HAND)

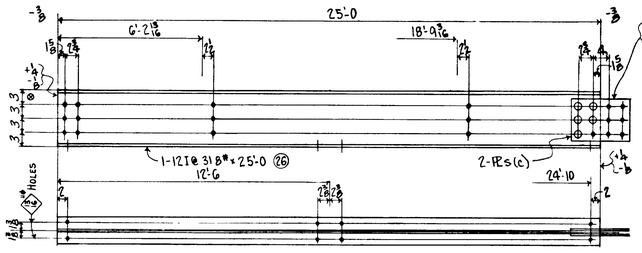

STRINGER S39ᴿ (AS SHOWN)
STRINGER S39ᴸ (OPP HAND)

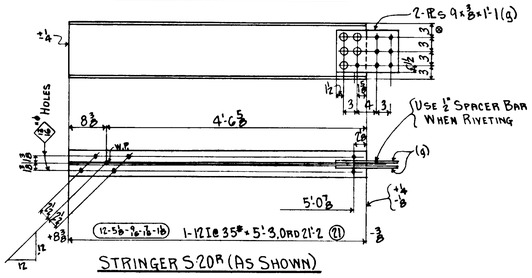

STRINGER S20ᴿ (AS SHOWN)
STRINGER S20ᴸ (OPP HAND)

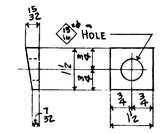

BEVELED WASHER W5

	No Req'd.	Description	Mark	Lot 1	Lot 2	Lot 3
	One	Stringer	S 27	1		
	2	do	S 28	1		
	One	do	S 29	1		
	One	do	S 30		1	
	2	do	S 31	1	1	
	One	do	S 32		1	
	2	do	S 33ᴿ	1	1	
	2	do	S 33ᴸ	1	1	
	4	do	S 34	2	2	
	One	do	S 35ᴿ		1	
	One	do	S 35ᴸ	1		
	One	do	S 36ᴿ		1	
	One	do	S 36ᴸ	1		
	2	do	S 37	1	1	
	2	do	S 38	1	1	
	2	do	S 39ᴿ	1	1	
	2	do	S 39ᴸ	1	1	
	2	do	S 40ᴿ	1	1	
	2	do	S 40ᴸ	1	1	
	One	do	S 41ᴿ		1	
	One	do	S 41ᴸ	1		
	2	do	S 20ᴿ	1	1	
	2	do	S 20ᴸ	1	1	
Excess	10	98	Beveled Washer	W 5	49	49

See Sheet #8 For General Notes

Rivets	⅞ø & 15/16ø Unless Noted
Open Holes	None
Ream	None
Milling	None
Paint	One Coat Of Red Lead, As Per Specs

Shop Contact Surfaces Not Painted

Approved for the Division of Bridges & Viaducts as to general arrangement and design but not field assembly, details or dimensions, unless so noted.

By H.F. Bohnhoff Date 5-3-50

Approved _____

Approved _____ Assistant Bridge Engineer

Approved _____ As City Bridge & Viad Engineer

Approved _____ City Bridge & Viad Engineer

Approved _____ City Engineer

CITY OF CHICAGO
DEPARTMENT OF PUBLIC WORKS
BUREAU OF ENGINEERING
DIVISION OF BRIDGES & VIADUCTS

WEST IRVING PARK BRIDGE
OVER THE
NORTH BRANCH CHICAGO RIVER

John F. Beasley Const. Co. Contractors

Subcontractors

Bethlehem Steel Co. Fabricators

Stringers

Made By	Checked By	Traced By
HMB	LG 6-13-50	

In Charge-Herb Scale: 1"=1'

Contract No. CG 1899-2 Sheet No. 9

City Dwg No. 7960 File No. 11-6-0-63

1660820075

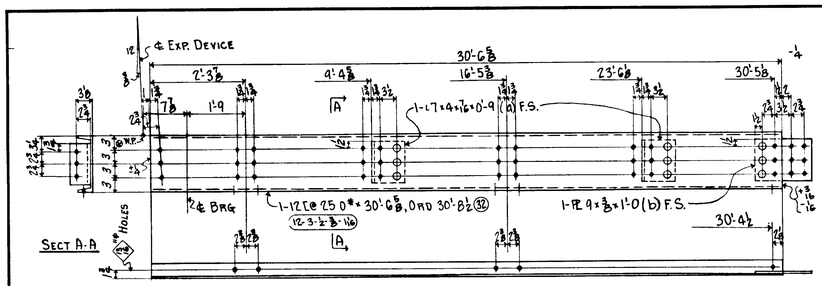

STRINGER S42R (AS SHOWN)
STRINGER S42L (OPP. HAND)

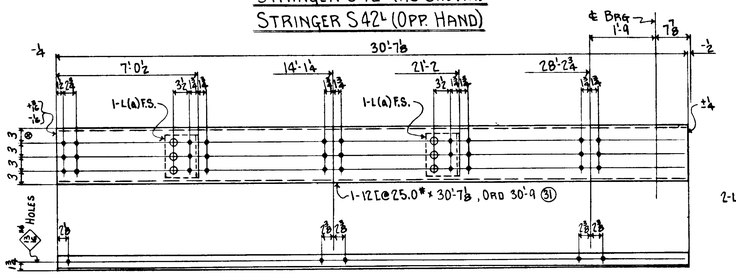

STRINGER S43R (AS SHOWN)
STRINGER S43L (OPP HAND)

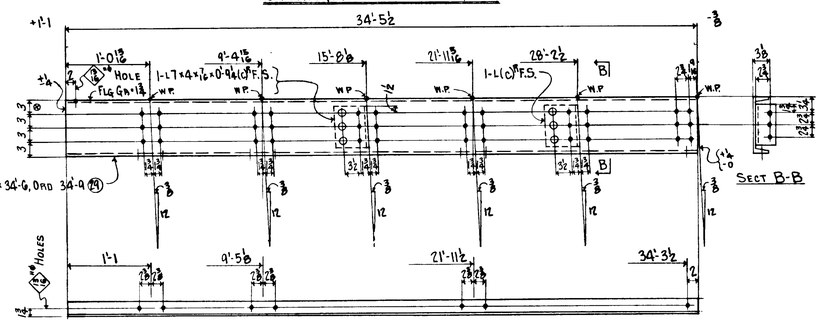

STRINGER S44R (AS SHOWN)
STRINGER S44L (OPP HAND)

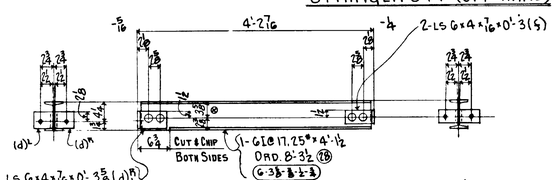

PIPE SUPPORT S45

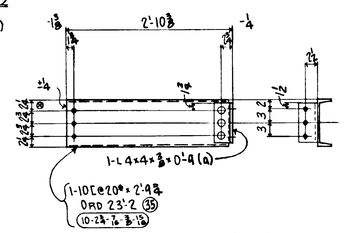

STRINGER HEADER S46R (AS SHOWN)
STRINGER HEADER S46L (OPP HAND)

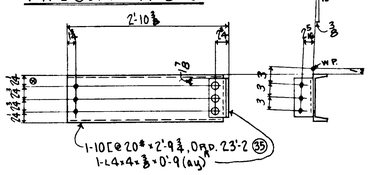

STRINGER HEADER S47R (AS SHOWN)
STRINGER HEADER S47L (OPP HAND)

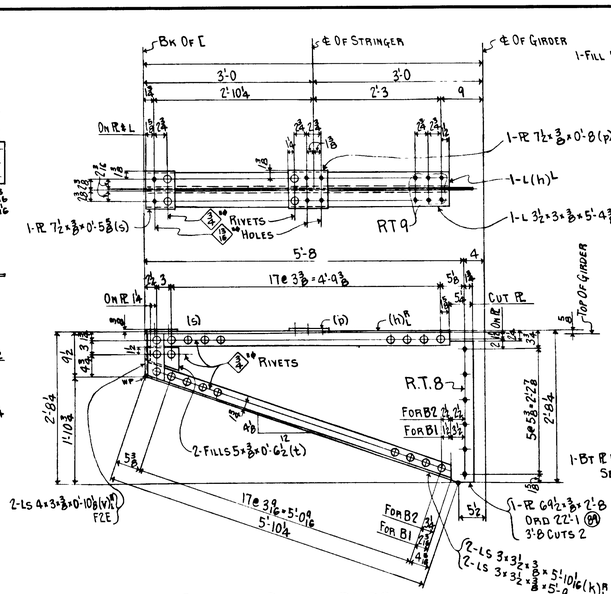

SIDEWALK BRACKET B1 & B2

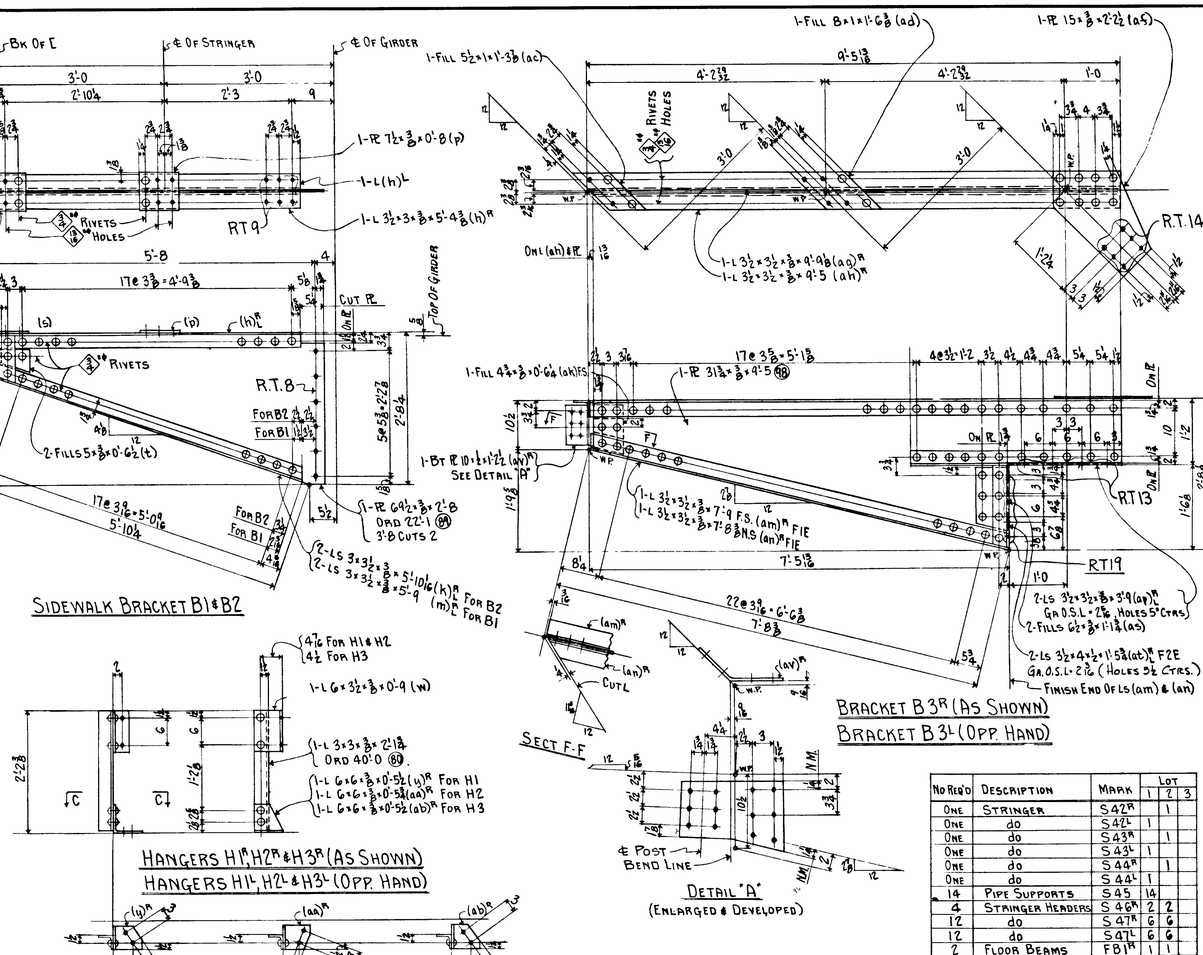

BRACKET B3R (AS SHOWN)
BRACKET B3L (OPP. HAND)

HANGERS H1R, H2R & H3R (AS SHOWN)
HANGERS H1L, H2L & H3L (OPP. HAND)

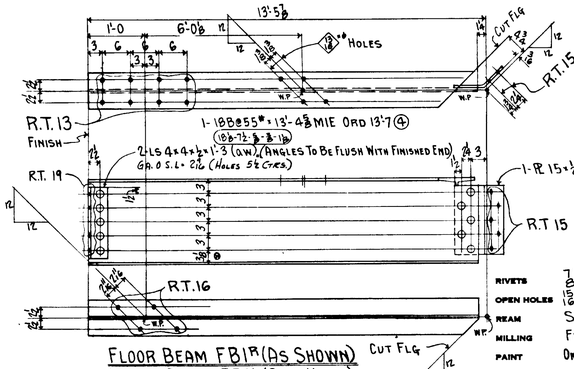

FLOOR BEAM FB1R (AS SHOWN)
FLOOR BEAM FB1L (OPP. HAND)

—REAMING NOTE—

ALL HOLES MARKED R.T. ARE TO BE SUB-PUNCHED 1" ϕ & REAMED TO 1 1/16" ϕ THRU A REAMING TEMPLET.

ALL OTHER HOLES MAY BE PUNCHED FULL SIZE.

No Req'd	Description	Mark	Lot 1	Lot 2	Lot 3
One	Stringer	S42R		1	
One	do	S42L	1		
One	do	S43R		1	
One	do	S43L	1		
One	do	S44R		1	
One	do	S44L	1		
14	Pipe Supports	S45	14		
4	Stringer Headers	S46R	2	2	
12	do	S47R	6	6	
12	do	S47L	6	6	
2	Floor Beams	FB1R	1	1	
2	do	FB1L	1	1	
8	Hanger	H1R			8
8	do	H1L			8
2	do	H2R			2
2	do	H2L			2
4	do	H3R			4
4	do	H3L			4
8	Sidewalk Bracket	B1	4	4	
26	do	B2	13	13	
2	Bracket	B3R	1	1	
2	do	B3L	1	1	
4	Stringer Headers	S46L	2	2	

See Sheet #8 For General Notes

APPROVED FOR THE DIVISION OF BRIDGES & VIADUCTS AS TO GENERAL ARRANGEMENT AND DESIGN BUT NOT FIELD ASSEMBLY, DETAILS OR DIMENSIONS, UNLESS SO NOTED.
BY W. F. Dohnhoff DATE 8-3-50
APPROVED
APPROVED Assistant Bridge Engineer
APPROVED City Bridge & Viad Engineer
APPROVED City Bridge & Viad Engineer
APPROVED City Engineer

RIVETS	7/8" ϕ Unless Noted
OPEN HOLES	15/16" ϕ Unless Noted
REAM	See Reaming Note
MILLING	Finish As Noted
PAINT	One Coat Of Red Lead As Per Specs
SHOP CONTACT SURFACES NOT PAINTED	

CITY OF CHICAGO
DEPARTMENT OF PUBLIC WORKS
BUREAU OF ENGINEERING
DIVISION OF BRIDGES & VIADUCTS

WEST IRVING PARK BRIDGE
OVER THE
NORTH BRANCH ~ CHICAGO RIVER

JOHN F BEASLEY CONST. CO — CONTRACTORS
SUBCONTRACTORS
BETHLEHEM STEEL CO. — FABRICATORS

STRINGERS & FLOOR BEAM
SIDEWALK BRACKETS & HANGERS

MADE BY	CHECKED BY	TRACED BY
HMB	LG 6-13-50	

IN CHARGE-HERB — SCALE: 1"=1'
CONTRACT NO. CG 1899-2 — SHEET NO. 10
CITY DWG NO. 77961 FILE NO. 11-6-0-64

1660820076

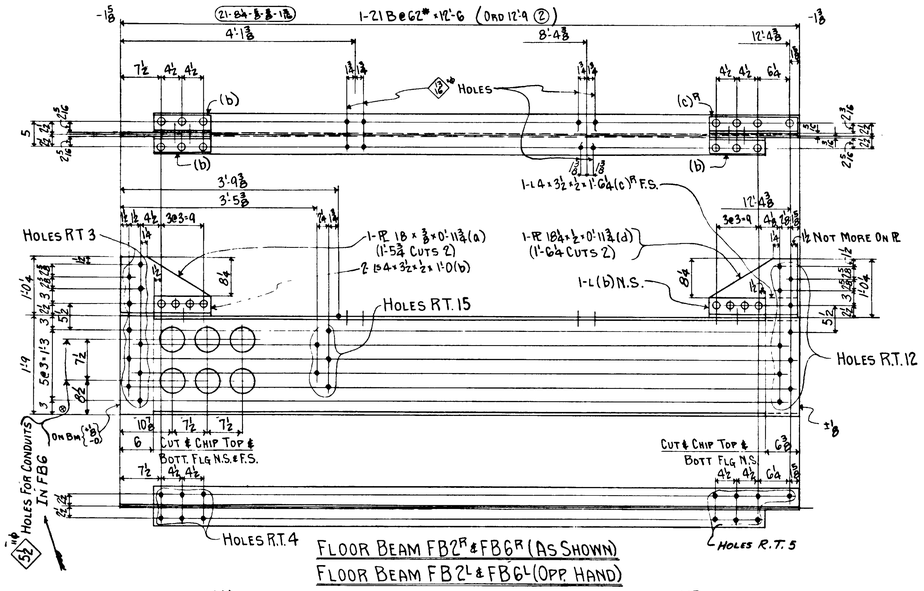

FLOOR BEAM FB2R & FB6R (AS SHOWN)
FLOOR BEAM FB2L & FB6L (OPP HAND)

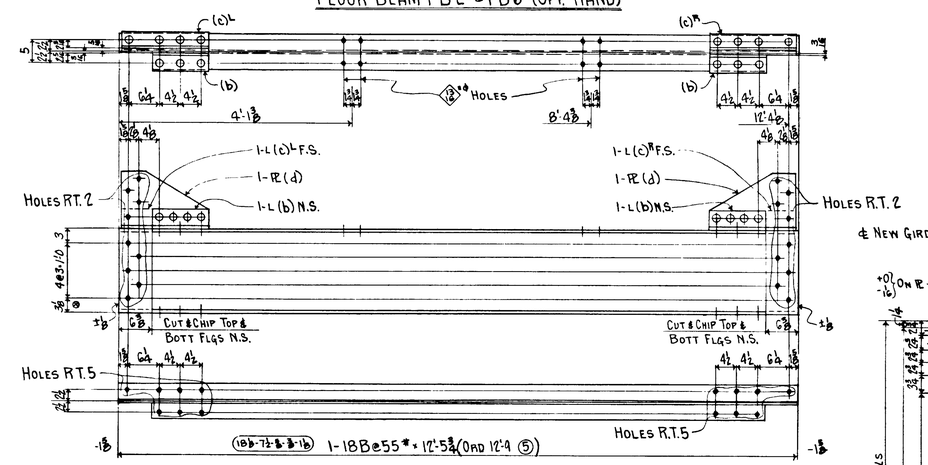

FLOOR BEAM FB3, ALL SHOP RIVETS "B"

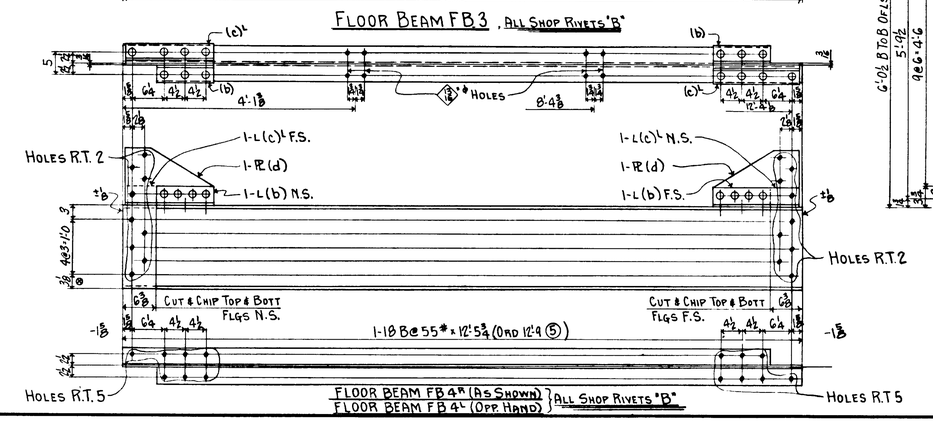

FLOOR BEAM FB4R (AS SHOWN)
FLOOR BEAM FB4L (OPP. HAND) } ALL SHOP RIVETS "B"

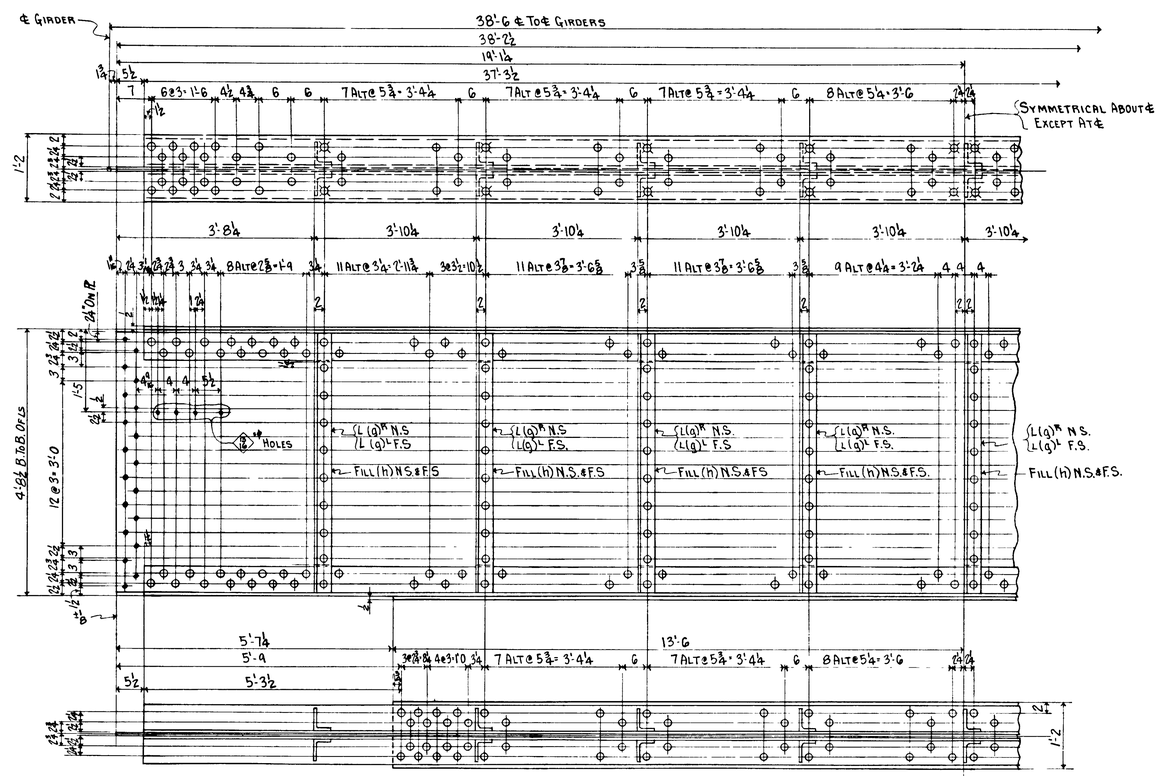

FLOOR BEAM FB5

BILL OF MATERIAL FOR ONE FLOOR BEAM FB5

2- TOP FLG LS 6 x 6 x ½ x 37'-3½ ORD 38'-6 (51)
2- BOTT. FLG LS 6 x 6 x ½ x 37'-3½
1- WEB PL 56 x 7/16 x 38'-2½ ORD 38'-6 (91)
1- TOP COV. PL 14 x ½ x 37'-3½ ORD 38'-6 (111)
1- BOTT. COV. PL 14 x ½ x 27'-0 (112)
18- LS 5 x 3½ x ½ x 4'-7½ (a) FF2E ORD 30'-2 (70)
18- FILLS 3½ x ½ x 3'-8 (h) ORD 30'-0 (131)

No Req'd	Description	Mark	Lot 1	Lot 2	Lot 3
One	Floor Beam	FB2R	1		
One	do	FB2L	1		
14	do	FB3	7	7	
8	do	FB4R	4	4	
8	do	FB4L	4	4	
2	do	FB5			2
One	do	FB6R		1	
One	do	FB6L		1	
34	Diaphragm	D1	17	17	
4	Stiff. Angle	M25R			4
4	do	M25L			4
4	do	M26R			4
4	do	M26L			4
16	do	M27			16

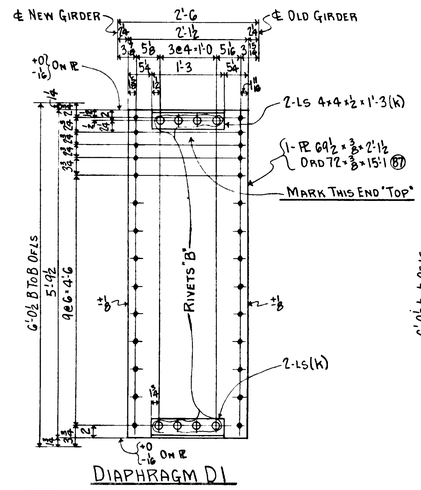

DIAPHRAGM D1

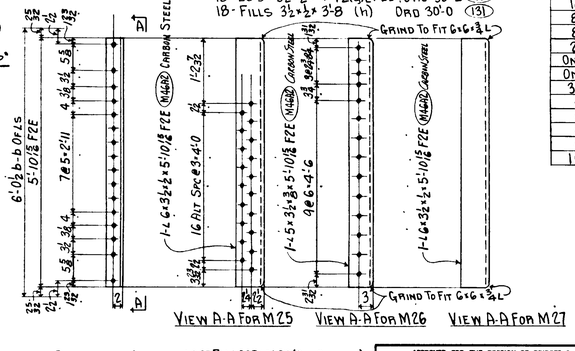

STIFFNER ANGLES M25R, M26R & M27 (AS SHOWN)
STIFFNER ANGLE M25L & M26L (OPP HAND)

RIVETS 7/8"ø
OPEN HOLES 15/16"ø UNLESS NOTED
REAM SEE REAMING NOTE ON SHEET #2
FINISH AS NOTED
PAINT ONE COAT OF RED LEAD AS PER SPECS
SHOP CONTACT SURFACES NOT PAINTED

FOR GEN. NOTES SEE SHEET NO 2

NOTE - ALL MAT'L ON THIS SHEET COPPER BRG. STEEL EXCEPT WHERE NOTE CARBON STEEL.

APPROVED FOR THE DIVISION OF BRIDGES & VIADUCTS AS TO GENERAL ARRANGEMENT AND DESIGN BUT NOT FIELD ASSEMBLY, DETAILS OR DIMENSIONS, UNLESS SO NOTED.
BY W. F. Bohnhoff DATE 8-3-50
APPROVED
APPROVED Gustavenick ASSISTANT BRIDGE ENGINEER
APPROVED [illegible] ASST. ENGR. OF BRIDGES & VIADUCTS
APPROVED Stephen Gnuchinski BRIDGE & VIAD ENGINEER
APPROVED [illegible] CITY ENGINEER

CITY OF CHICAGO
DEPARTMENT OF PUBLIC WORKS
BUREAU OF ENGINEERING
DIVISION OF BRIDGES & VIADUCTS

WEST IRVING PARK BRIDGE
OVER THE
NORTH BRANCH ~ CHICAGO RIVER

JOHN F. BEASLEY CONST. CO. CONTRACTORS
SUBCONTRACTORS
BETHLEHEM STEEL CO. FABRICATORS

FLOOR BEAMS FB2 ~ FB3 ~ FB4 ~ FB5 & FB6
DIAPHRAGM D1
STIFFENER ANGLES

MADE BY	CHECKED BY	TRACED BY
HMB	N.L. 6-20-50	

IN CHARGE-HERB SCALE:
CONTRACT NO. CG 1899-2 SHEET NO. 11
CITY DWG NO. 7962 FILE NO. 11-6-0-65

1660820077

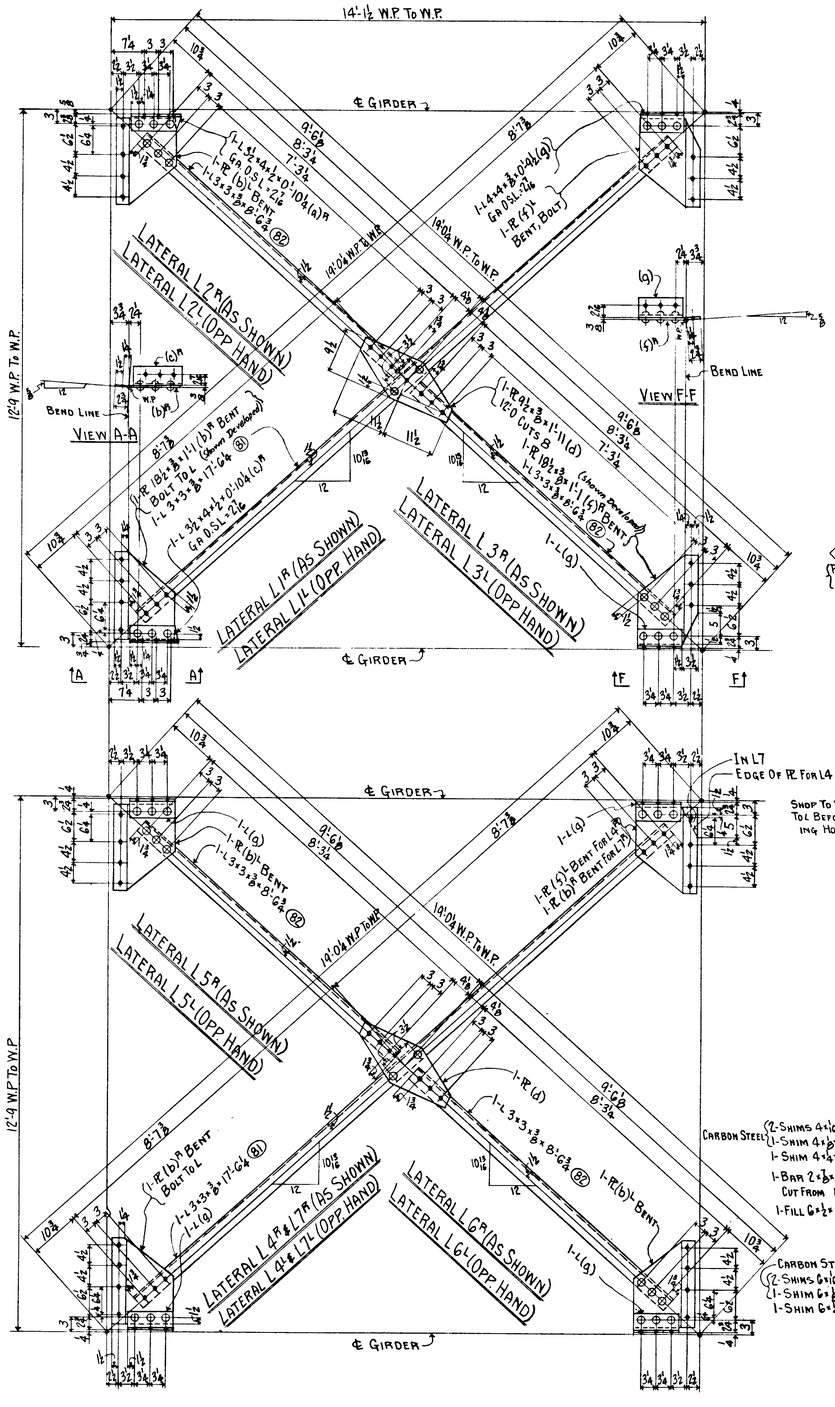

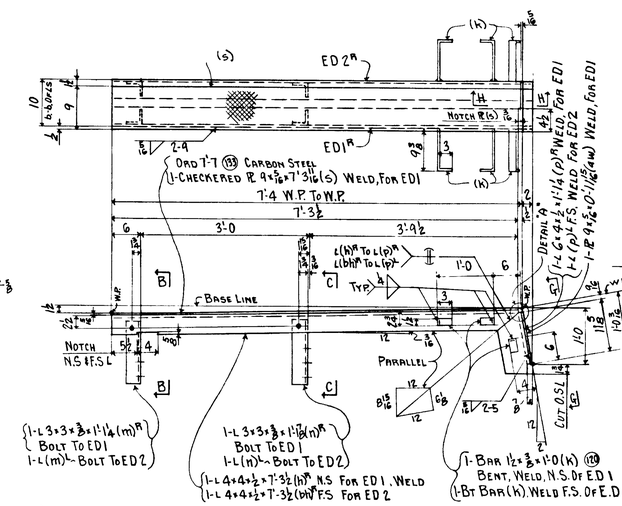

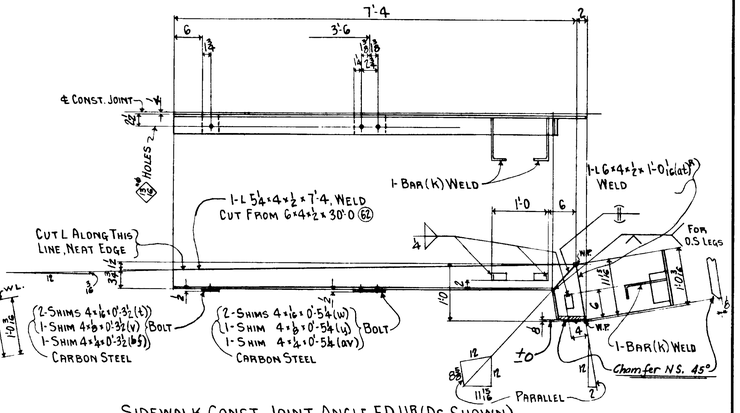

SIDEWALK CONST. JOINT ANGLE ED11R (AS SHOWN)

SIDEWALK CONST. JOINT ANGLE ED11L (OPP. HAND)

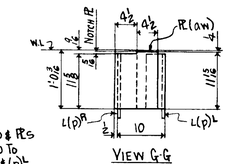

VIEW G-G

SIDEWALK EXPANSION DEVICE ED1R & ED2R (AS SHOWN)

SIDEWALK EXPANSION DEVICE ED1L & ED2L (OPP HAND)

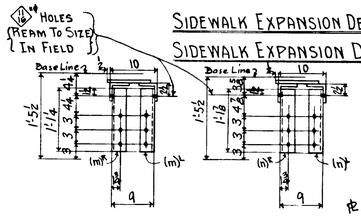

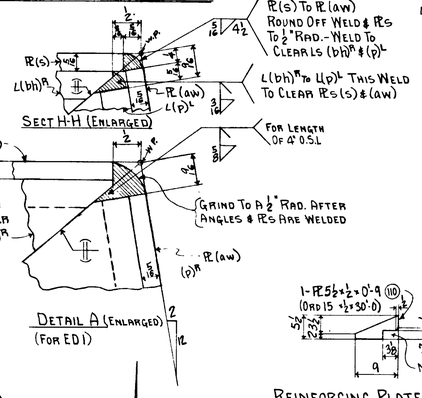

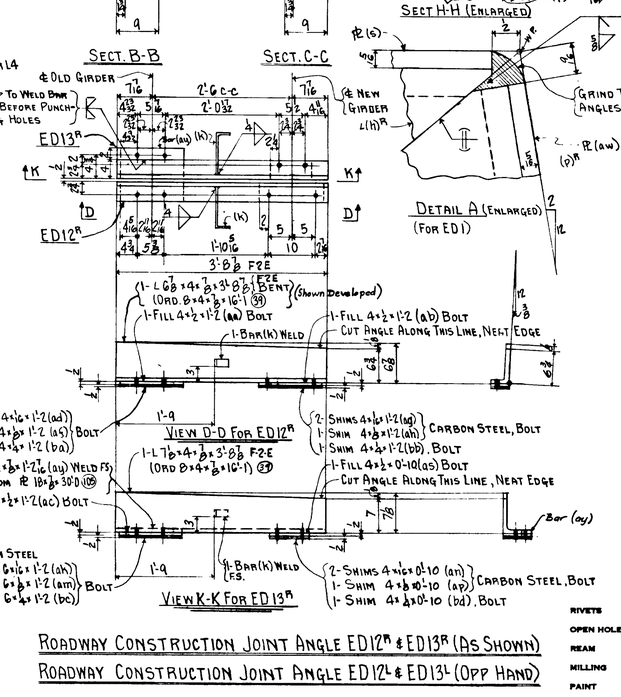

ROADWAY CONSTRUCTION JOINT ANGLE ED12R & ED13R (AS SHOWN)

ROADWAY CONSTRUCTION JOINT ANGLE ED12L & ED13L (OPP HAND)

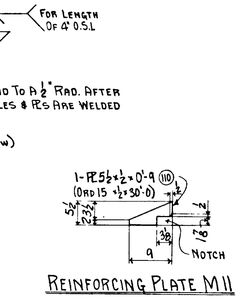

REINFORCING PLATE M11

REINFORCING PLATE M12

RIVETS	⅞" ø
OPEN HOLES	15/16" ø UNLESS NOTED
REAM	NONE
MILLING	NONE
PAINT	ONE COAT OF RED LEAD AS PER SPEC'S
SHOP CONTACT SURFACES NOT PAINTED	

NOTE:- ALL MATERIAL ON THIS SHEET COPPER BEARING STEEL, EXCEPT WHERE NOTED CARBON STEEL

FOR GEN. NOTES SEE SHEET 8

No Req'd	Description	Mark	Lot 1	Lot 2	Lot 3	
2	Lateral	L1R				
2	do	L1L				
2	do	L2R				
2	do	L2L				
3	do	L3R				For Contract CG 1899-2
3	do	L3L				
One	do	L4R				
One	do	L4L				
2	do	L5R				
2	do	L5L				
One	do	L6R				
One	do	L6L				
One	do	L7R				
One	do	L7L				
One	Sidewalk Exp Device	ED1R				
One	do	ED1L				
One	do	ED2R				
One	do	ED2L				
2	Sidewalk Const. Joint Angle	ED11R				
2	do	ED11L				
One	Roadway Const. Joint Angle	ED12R				For Contract CG 1899-3
One	do	ED12L				
One	do	ED13R				
One	do	ED13L				
6	Reinforcing Plate	M11				
2	do	M12				

CITY OF CHICAGO
DEPARTMENT OF PUBLIC WORKS
BUREAU OF ENGINEERING
DIVISION OF BRIDGES & VIADUCTS

WEST IRVING PARK BRIDGE OVER THE NORTH BRANCH ~ CHICAGO RIVER

JOHN F BEASLEY CONST. CO — CONTRACTORS

SUBCONTRACTORS

BETHLEHEM STEEL CO. — FABRICATORS

LATERALS
CONST. & EXP. JOINTS
REINFORCING PLATES

APPROVED FOR THE DIVISION OF BRIDGES & VIADUCTS AS TO GENERAL ARRANGEMENT AND DESIGN BUT NOT FIELD ASSEMBLY, DETAILS OR DIMENSIONS, UNLESS SO NOTED.

BY N.F. Bohnhoff DATE 8-3-50

APPROVED
APPROVED — ASSISTANT BRIDGE ENGINEER
APPROVED — ASST. ENGR. OF BRIDGES & VIADUCTS
APPROVED — ASST. ENGR. OF BRIDGES & VIADUCTS
APPROVED — CITY ENGINEER

MADE BY	CHECKED BY	TRACED BY
HMB	N.L. 6-19-50	

IN CHARGE-HERB — SCALE:
CONTRACT NO. CG 1899-2-3 — SHEET NO. 12
CITY DWG NO. 7963 — FILE NO. 11-6-0-66

37

1660820078

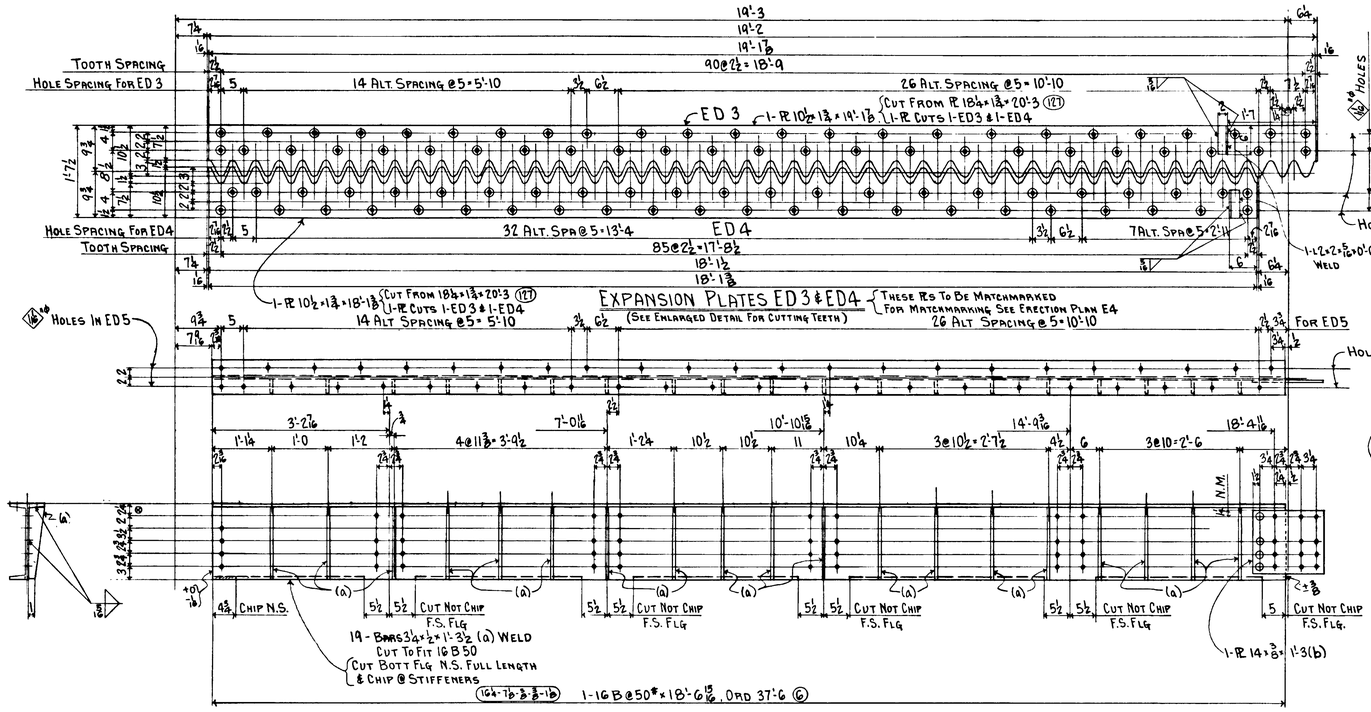

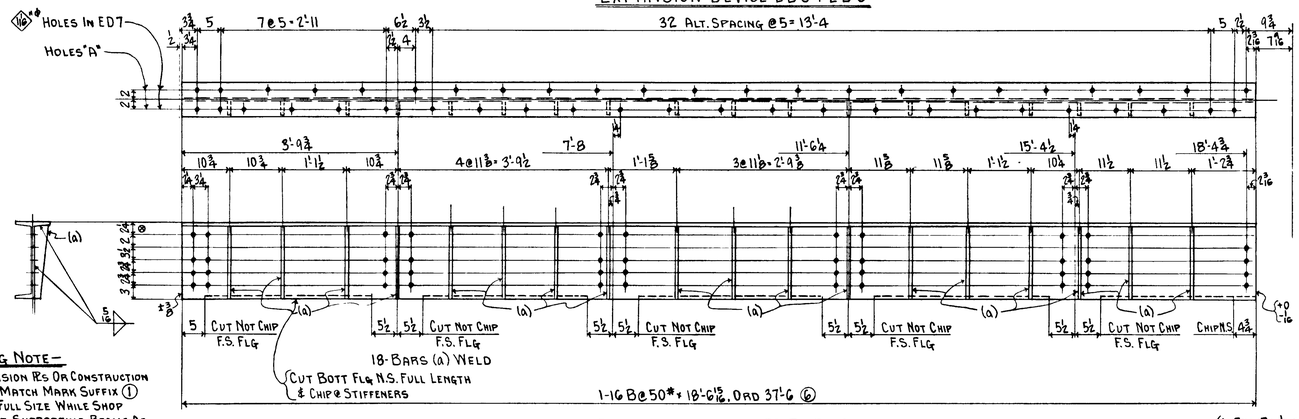

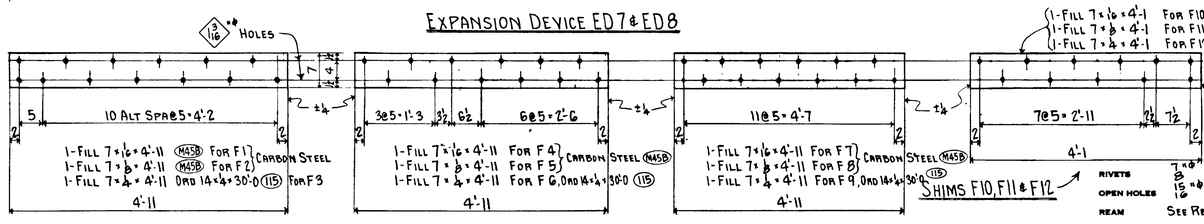

Reaming Note

(a) Holes "A" For Expansion Rs Or Construction Joint Angles With Match Mark Suffix (1) Are To Be Drilled Full Size While Shop Assembled To Their Supporting Beams As Shown On Erection Plan E4 & E5.
Holes "A" For Expansion Rs Or Construction Joint Angles With Match Mark Suffix (2) Are To Be Drilled Full Size Before Assembly.

(b) All Holes Marked "RT" Are To Be Subpunched 1/16" ø & Reamed To 13/16" ø Thru A Reaming Templet.

(c) All Other Holes May Be Punched Full Size.

No Req'd	Description	Mark	Lot 1	Lot 2	Lot 3
2	Expansion Plates	ED 3			2
2	do	ED 4			2
One	Expansion Device	ED 5			1
One	do	ED 6			1
One	do	ED 7			1
One	do	ED 8			1
One	do	ED 9R			1
One	do	ED 9L			1
One	do	ED 10R			1
One	do	ED 10L			1
4	Shims	F 1			4
2	do	F 2			2
2	do	F 3			2
4	do	F 4			4
2	do	F 5			2
2	do	F 6			2
12	do	F 7			12
6	do	F 8			6
6	do	F 9			6
4	do	F 10			4
2	do	F 11			2
2	do	F 12			2
4	do	F 13			4
2	do	F 14			2
2	do	F 15			2
4	do	F 16			4
2	do	F 17			2
2	do	F 18			2

Note- All Material On This Sheet Copper Bearing Steel Except Where Noted Carbon Steel

See Sheet #8 For General Notes

APPROVED FOR THE DIVISION OF BRIDGES & VIADUCTS AS TO GENERAL ARRANGEMENT AND DESIGN BUT NOT FIELD ASSEMBLY, DETAILS OR DIMENSIONS, UNLESS SO NOTED.
BY W.F. Bohnhoff DATE 8-3-50
APPROVED _____ ASSISTANT BRIDGE ENGINEER
APPROVED _____ ASST. CITY BRIDGE & VIAD ENGINEER
APPROVED _____ CITY BRIDGE & VIAD ENGINEER
APPROVED _____ CITY ENGINEER

RIVETS	7/8" ø
OPEN HOLES	15/16" ø Unless Noted
REAM	See Reaming Note
MILLING	None
PAINT	One Coat Of Red Lead, As Per Specs

SHOP CONTACT SURFACES NOT PAINTED

CITY OF CHICAGO
DEPARTMENT OF PUBLIC WORKS
BUREAU OF ENGINEERING
DIVISION OF BRIDGES & VIADUCTS

WEST IRVING PARK BRIDGE OVER THE NORTH BRANCH~CHICAGO RIVER

JOHN F BEASLEY CONST. CO. CONTRACTORS

SUBCONTRACTORS

BETHLEHEM STEEL CO. FABRICATORS

EXPANSION DEVICES & SHIMS

MADE BY	CHECKED BY	TRACED BY
HMB	LG 6-29-50	

IN CHARGE-HERB SCALE:
CONTRACT NO. CG 1899-3 SHEET NO. 13
CITY DWG NO. 17964 FILE NO. 11-6-0-67

1660820079

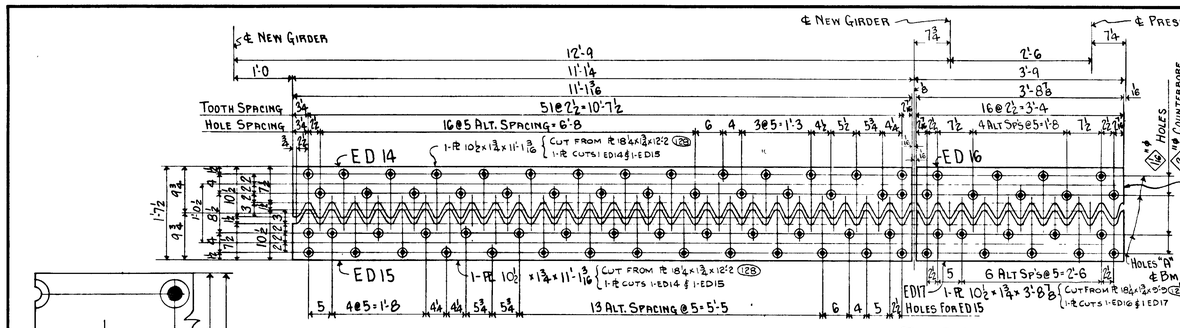

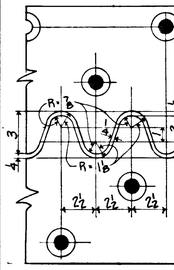

Enlarged Detail For Cutting Teeth

Expansion Plates ED 14, ED 15, ED 16 & ED 17

{ These Rs To Be Match Marked See Erection Drawing E4

(See Enlarged Detail For Cutting Teeth)

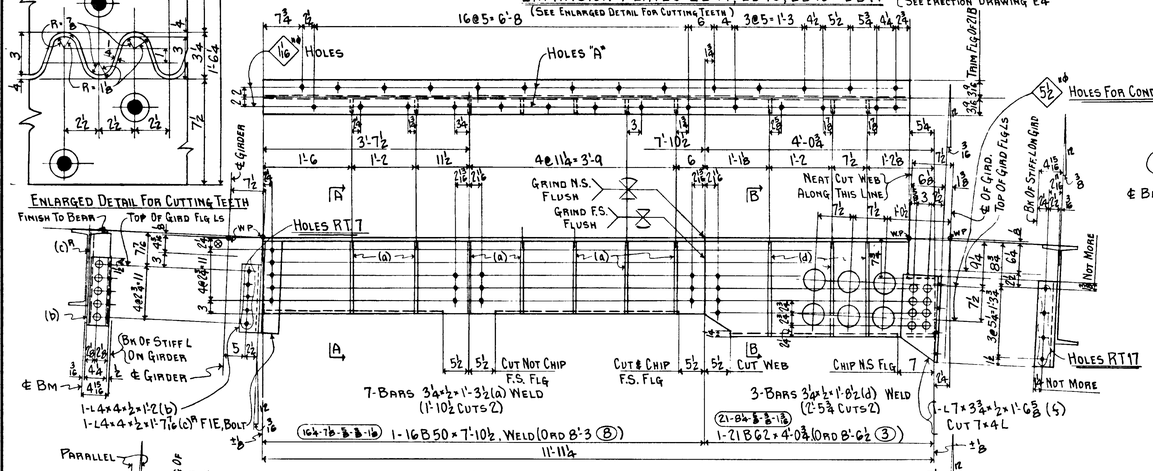

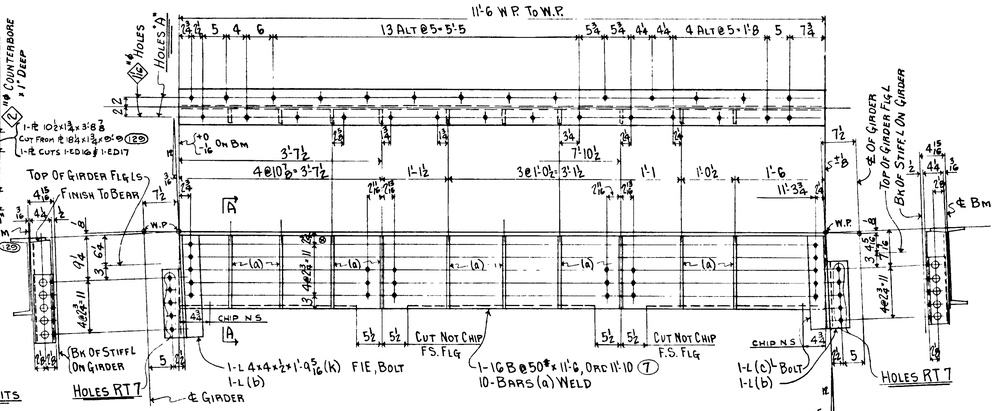

Expansion Device ED 20

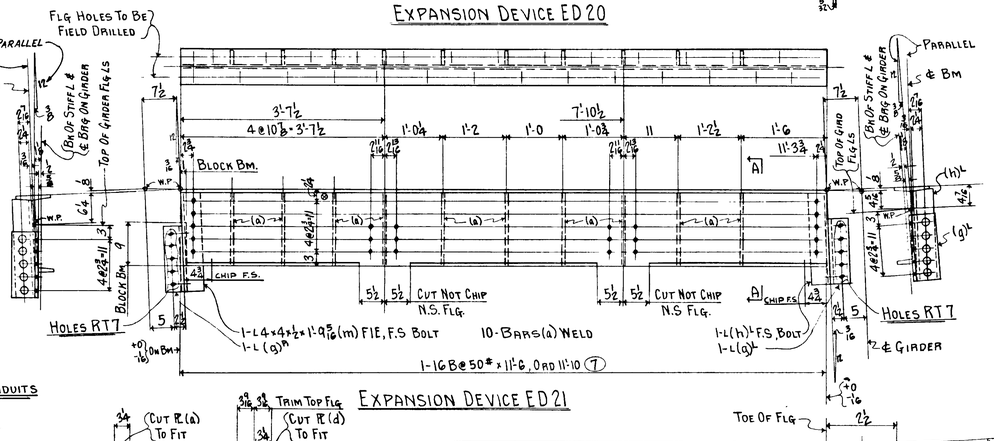

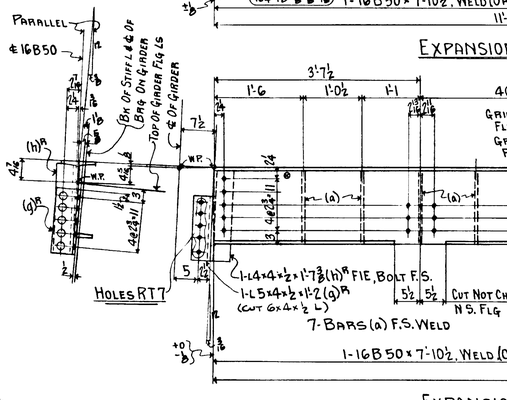

Expansion Device ED 18

Expansion Device ED 21

Sect. A-A Sect. B-B

For Note For Holes "A" See Reaming Note On Sheet 13

Excess	No Reqd	Description	Mark	Lot 1	Lot 2	Lot 3
	2	Expansion Plates	ED 14	1	1	
	2	do	ED 15	1	1	
	2	do	ED 16	1	1	
	2	do	ED 17	1	1	
	One	Expansion Device	ED 18		1	
	One	do	ED 19		1	
	One	do	ED 20	1		
	One	do	ED 21	1		
	4	Shims	F 19	2	2	
	2	do	F 20	1	1	
	2	do	F 21	1	1	
	8	do	F 22	4	4	
	4	do	F 23	2	2	
	4	do	F 24	2	2	
	4	do	F 25	2	2	
	2	do	F 26	1	1	
	2	do	F 27	1	1	
	4	do	F 28	2	2	
	2	do	F 29	1	1	
	2	do	F 30	1	1	
	4	do	F 31	2	2	
	2	do	F 32	1	1	
	2	do	F 33	1	1	
10	346	Beveled Washers	W 1	78	78	190

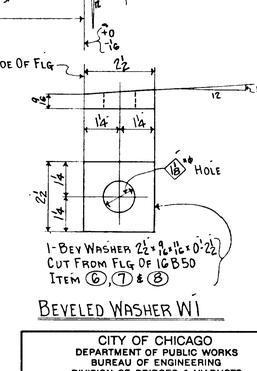

Beveled Washer W1

Expansion Device ED 19

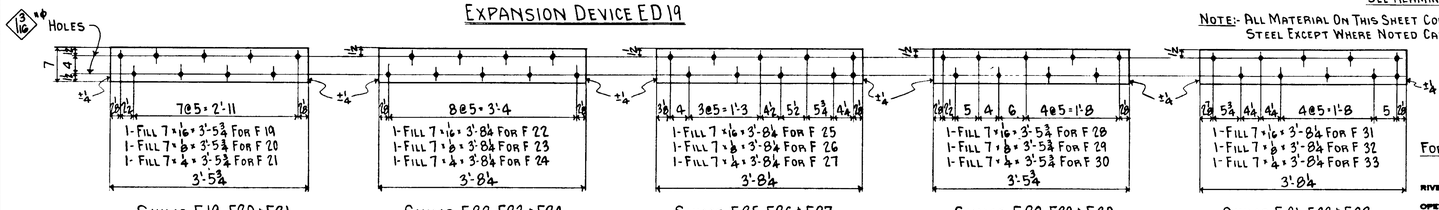

Shims F 19, F 20 & F 21 | Shims F 22, F 23 & F 24 | Shims F 25, F 26 & F 27 | Shims F 28, F 29 & F 30 | Shims F 31, F 32 & F 33

Material Note { All ⅛" & 1/16" Thick Shims, Item (M458) Carbon Steel
All ¼" Thick Shims Cut From 14 x ¼ x 30'-0, Item (115)

Note:- All Material On This Sheet Copper Bearing Steel Except Where Noted Carbon Steel

For Gen. Notes See Sheet 8

Rivets	⅞" ⌀
Open Holes	15/16" ⌀ Unless Noted
Ream	See Reaming Note On Sheet 13
~~Milling~~	Finishing As Noted
Paint	One Coat Of Red Lead, As Per Specs
Shop Contact Surfaces Not Painted	

Approved for the Division of Bridges & Viaducts as to general arrangement and design but not field assembly, details or dimensions, unless so noted.

By W.F. Bohnhoff Date 8-3-50

Approved Assistant Bridge Engineer

Approved Asst. City Bridge & Viad Engineer

Approved City Bridge & Viad Engineer

Approved City Engineer

CITY OF CHICAGO
DEPARTMENT OF PUBLIC WORKS
BUREAU OF ENGINEERING
DIVISION OF BRIDGES & VIADUCTS

West Irving Park Bridge Over The North Branch ~ Chicago River

John F Beasley Const. Co. Contractors

Subcontractors

Bethlehem Steel Co. Fabricators

Expansion Devices
Expansion Plates
Shims

Made By	Checked By	Traced By
HMB	N.L. 6-30-50	

In Charge-Herb Scale:

Contract No. CG 1899-3 Sheet No. 14

City Dwg No. 79655 File No. 11-6-0-68

1660820080

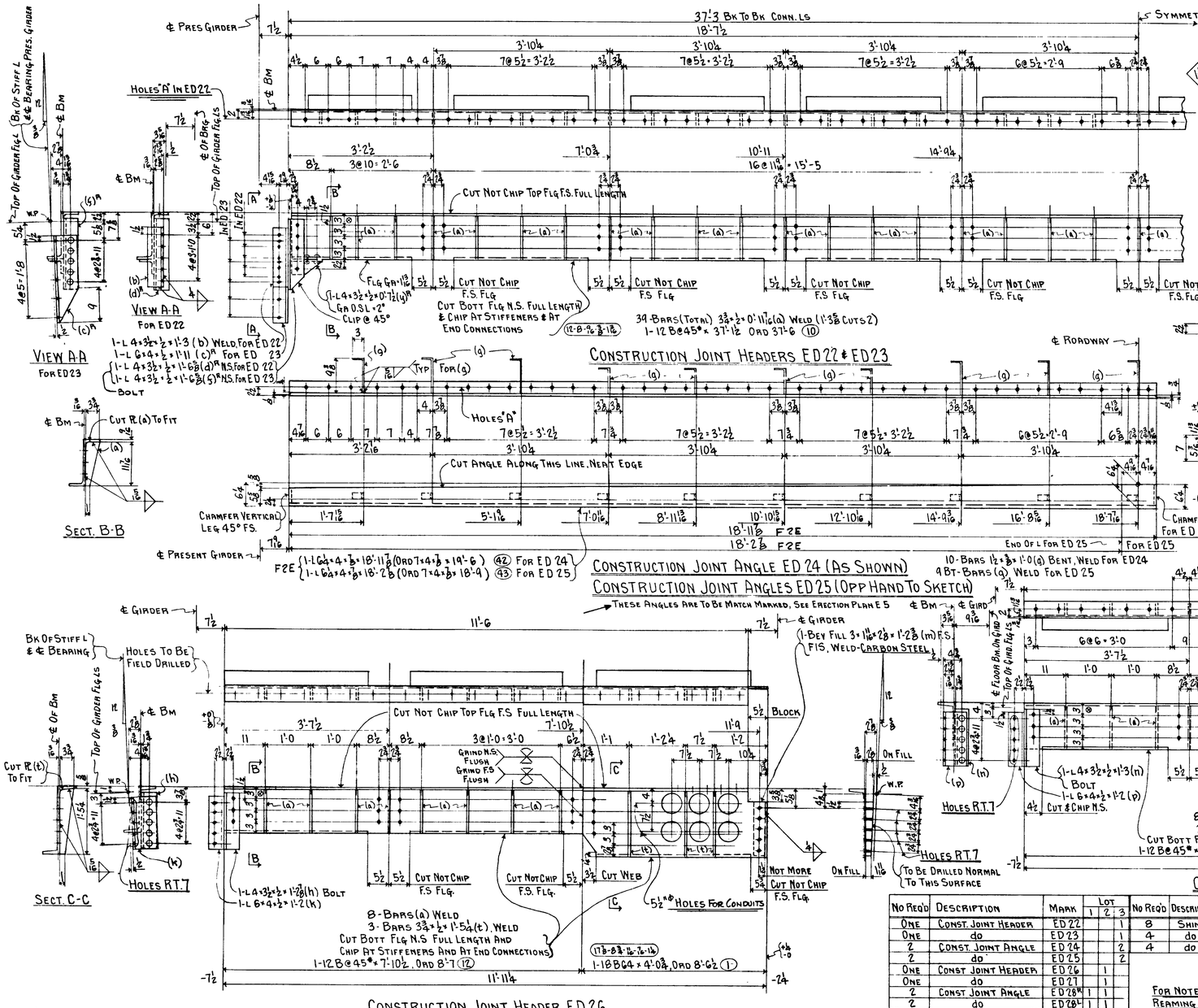

No Req'd	Description	Mark	Lot 1	Lot 2	Lot 3
One	Const. Joint Header	ED 22			1
One	do	ED 23			1
2	Const. Joint Angle	ED 24			2
2	do	ED 25			2
One	Const. Joint Header	ED 26		1	
One	do	ED 27		1	
2	Const. Joint Angle	ED 28R	1	1	
2	do	ED 28L	1	1	
8	Shims	F 34			8
4	do.	F 35			4
4	do	F 36			4
24	do	F 37			24
12	do	F 38			12
12	do	F 39			12
8	do	F 40	4	4	
4	do	F 41	2	2	
4	do	F 42	2	2	
8	do	F 43			8
4	do	F 44			4
4	do	F 45			4
8	do	F 46	4	4	
4	do	F 47	2	2	
4	do	F 48	2	2	

No Req'd	Description	Mark	Lot 1	Lot 2
8	Shims	F 59	4	4
4	do	F 60	2	2
4	do	F 61	2	2

For Note For Holes "A" See Reaming Note On Sheet 13

For Gen. Notes See Sheet *8

RIVETS 7/8*
OPEN HOLES 15/16* Unless Noted
REAM See Reaming Note On Sheet *13
MILLING Finishing As Noted
PAINT One Coat Of Red Lead, As Per Specs
SHOP CONTACT SURFACES NOT PAINTED

Note:- All Material On This Sheet Copper Bearing Steel, Except Where Noted Carbon Steel

APPROVED FOR THE DIVISION OF BRIDGES & VIADUCTS AS TO GENERAL ARRANGEMENT AND DESIGN BUT NOT FIELD ASSEMBLY, DETAILS OR DIMENSIONS, UNLESS SO NOTED.
BY W. F. Bohnhoff DATE 8-3-50
APPROVED
APPROVED G. A. Steinmetz ASSISTANT BRIDGE ENGINEER
APPROVED N. L. Enslow ASST. CITY BRIDGE & VIAD ENGINEER
APPROVED Stephen Gmurkowski BRIDGE & VIAD ENGINEER
APPROVED CITY ENGINEER

CITY OF CHICAGO
DEPARTMENT OF PUBLIC WORKS
BUREAU OF ENGINEERING
DIVISION OF BRIDGES & VIADUCTS

West Irving Park Bridge Over The North Branch - Chicago River

John F. Beasley Const. Co. CONTRACTORS
SUBCONTRACTORS
Bethlehem Steel Co. FABRICATORS

Construction Joint Headers & Angles
Shims

Made By	Checked By	Traced By
H.M.B.	N.L. 7-7-50	

In Charge-Herb Scale:
Contract No. CG 1899-3 Sheet No. 15
City Dwg No. 17966 File No. 11-6-0-69

1660820081

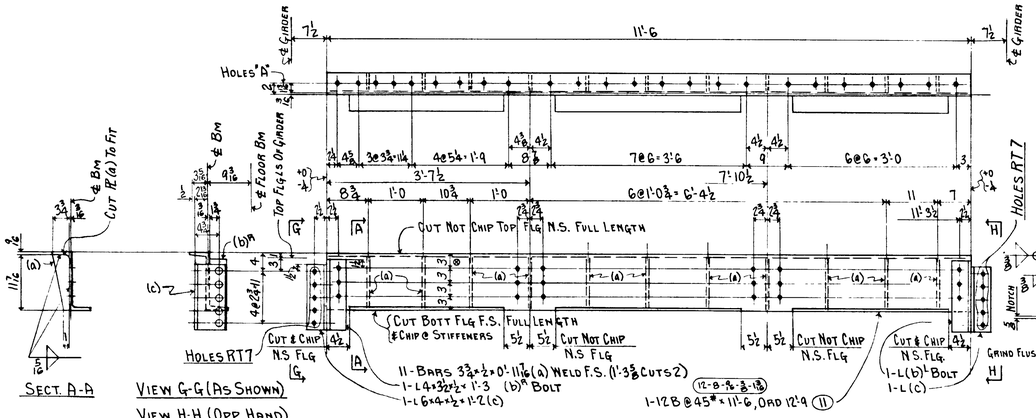

SECT. A-A

VIEW G-G (AS SHOWN)

VIEW H-H (OPP HAND)

CONSTRUCTION JOINT HEADER ED 29

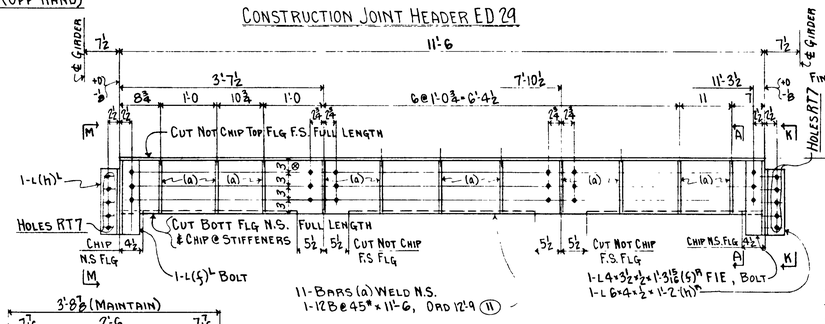

CONSTRUCTION JOINT HEADER ED 30

SECT. B-B

VIEW K-K (AS SHOWN)

VIEW M-M (OPP HAND)

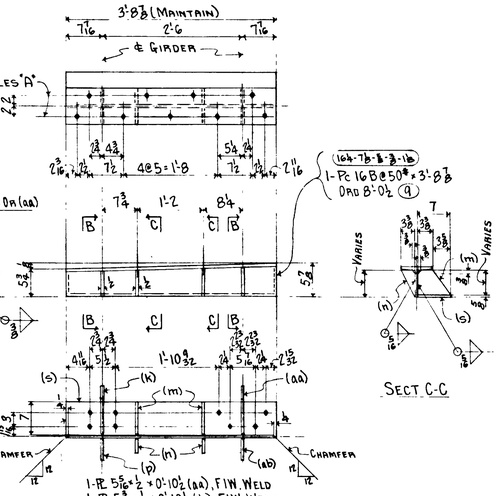

EXPANSION DEVICE ED 32

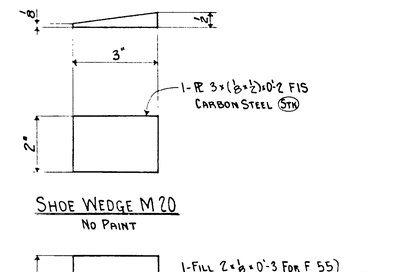

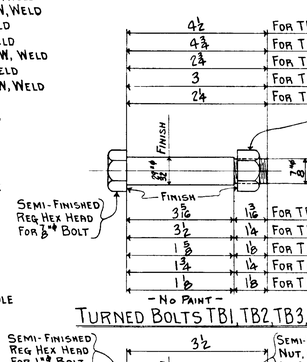

TURNED BOLTS TB1, TB2, TB3, TB4 & TB5

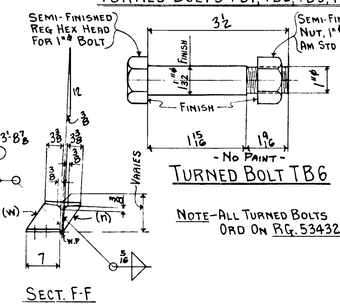

TURNED BOLT TB6

NOTE - ALL TURNED BOLTS ORD ON RG. 53432

No Req'd	Description	Mark	Lot 1	Lot 2	Lot 3
2	Shims	F 62	1	1	
2	do	F 63	1	1	
2	do	F 64	1	1	
2	do	F 65	1	1	
4	do	F 66	2	2	
4	do	F 67	2	2	
One	Const. Joint Header	ED 29	1		
One	do	ED 30	1		
One	Expansion Device	ED 31	1		
One	do	ED 32		1	
One	do	ED 33		1	
One	do	ED 34	1		
4	Shims	F 49	2	2	
2	do	F 50	1	1	
2	do	F 51	1	1	
4	do	F 52	2	2	
2	do	F 53	1	1	
2	do	F 54	1	1	
48	do	F 55	24	24	
48	do	F 56	24	24	
96	do	F 57	48	48	
48	do	F 58	24	24	
9	Turned Bolts	TB 1		9	
4	do	TB 2		4	
30	do	TB 3	20	10	
4	do	TB 4		4	
30	do	TB 5	20	10	
336	do	TB 6	75	75	186
48	Shoe Wedges	M 20	24	24	
12	Beveled Washers	W 2		12	
440	Washers	W 3	120	200	120
70	do	W 4	35	35	

Excess: 3, 26, 6

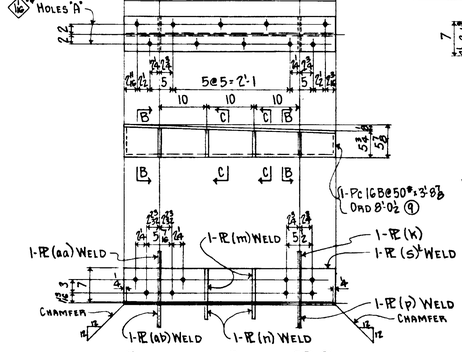

EXPANSION DEVICE ED 31

SHIMS F 62 & F 63

SHIMS F 64 & F 65

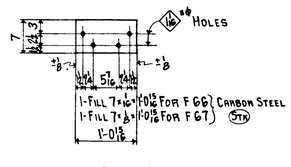

SHIMS F 66 & F 67

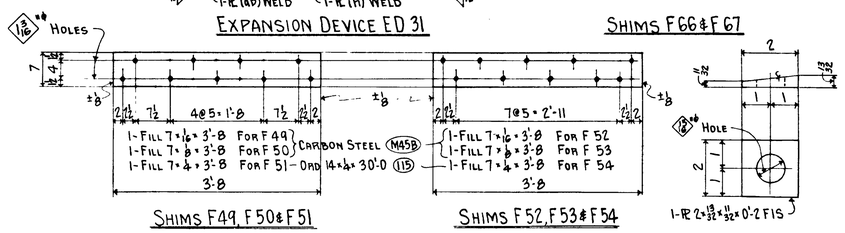

SHIMS F 49, F 50 & F 51

SHIMS F 52, F 53 & F 54

BEVELED WASHER W 2

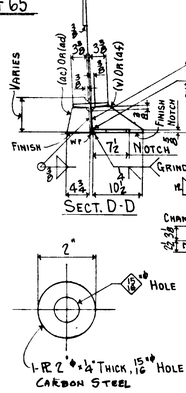

SECT. D-D

WASHER W 3

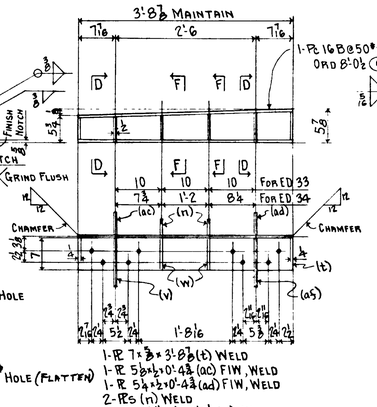

EXPANSION DEVICE ED 33 (AS SHOWN)

EXPANSION DEVICE ED 34 (OPP HAND TO SKETCH)

SECT. F-F

NOTE - ALL MATERIAL ON THIS SHEET COPPER BEARING STEEL EXCEPT FOR TURNED BOLTS AND EXCEPT WHERE NOTED CARBON STEEL.

FOR GENERAL NOTES, SEE SHEET #8

RIVETS	7/8" ϕ, UNLESS NOTED
OPEN HOLES	15/16" ϕ, UNLESS NOTED
REAM	SEE REAMING NOTE ON SHEET #13
MILLING	FIN AS NOTED
PAINT	ONE COAT OF RED LEAD, AS PER SPECS UNLESS NOTED
SHOP CONTACT SURFACES NOT PAINTED	

APPROVED FOR THE DIVISION OF BRIDGES & VIADUCTS AS TO GENERAL ARRANGEMENT AND DESIGN BUT NOT FIELD ASSEMBLY, DETAILS OR DIMENSIONS, UNLESS SO NOTED.

BY W. F. Bohnhoff DATE 7-3-50

APPROVED

APPROVED Asst. Bridge Engineer

APPROVED Asst. City Bridge & Viad Engineer

APPROVED City Engineer

CITY OF CHICAGO
DEPARTMENT OF PUBLIC WORKS
BUREAU OF ENGINEERING
DIVISION OF BRIDGES & VIADUCTS

WEST IRVING PARK BRIDGE
OVER THE
NORTH BRANCH ~ CHICAGO RIVER

JOHN F BEASLEY CONST. CO — CONTRACTORS

SUBCONTRACTORS

BETHLEHEM STEEL CO. — FABRICATORS

EXPANSION DEVICES, SHIMS, WEDGES & TURNED BOLTS.

MADE BY	CHECKED BY	TRACED BY
HMB	LG 7-6-50	

IN CHARGE - HERB — SCALE:

CONTRACT NO. CG 1899-3 — SHEET NO. 16

CITY DWG NO. 17967 FILE NO. 11-6-0-70

41

1660820082

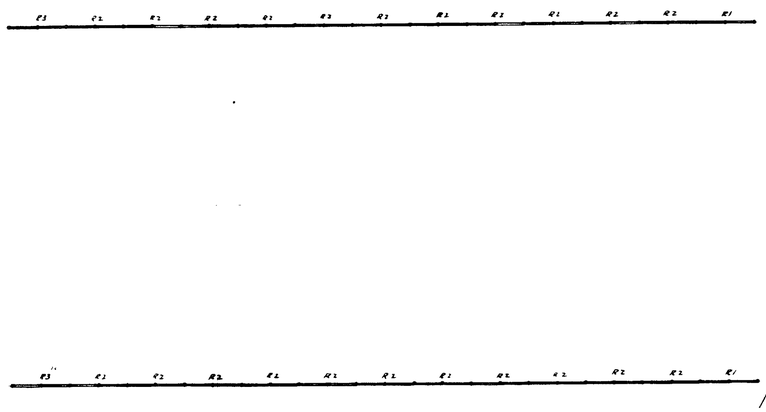

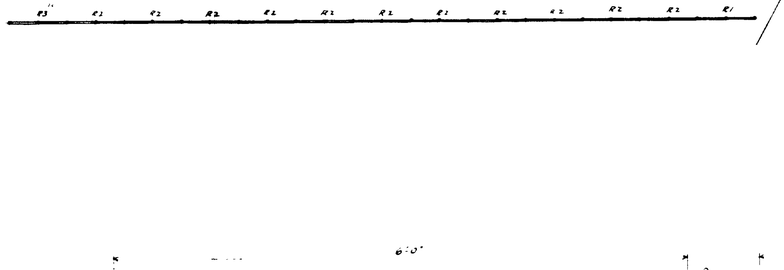

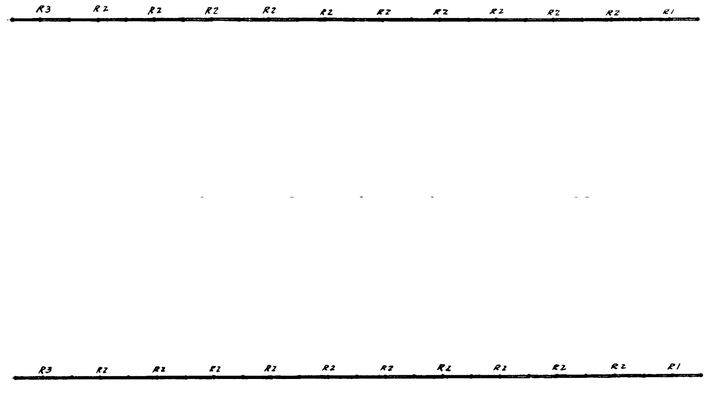

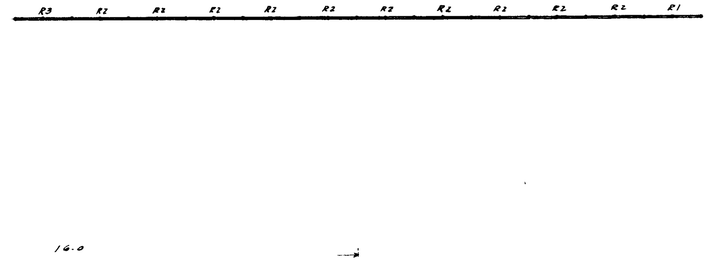

Plan

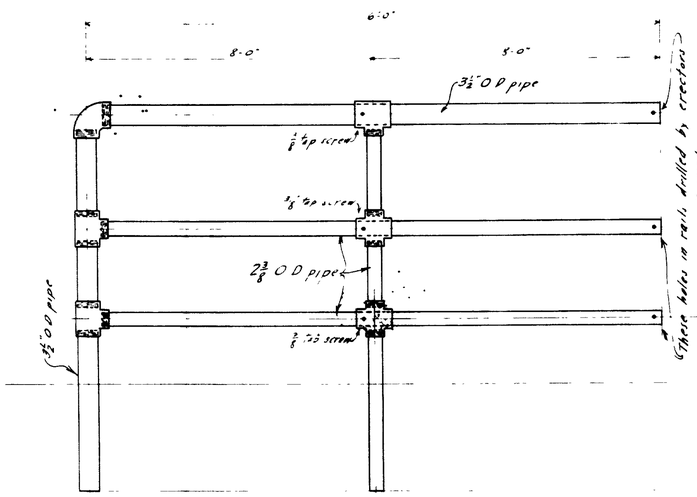

4 End Sections - R3

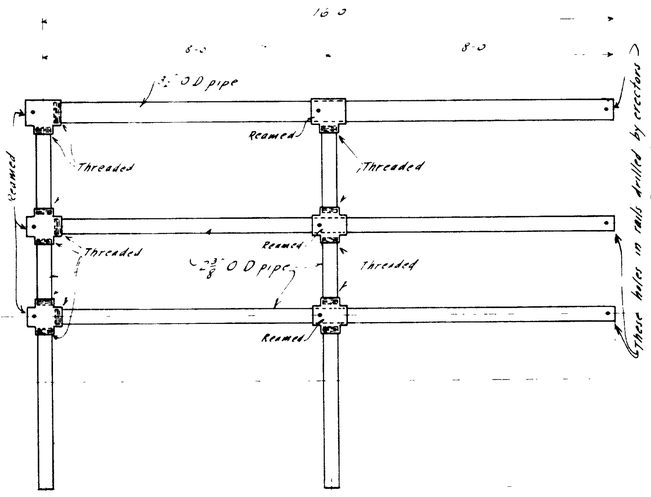

42 Intermediate Sections - R2

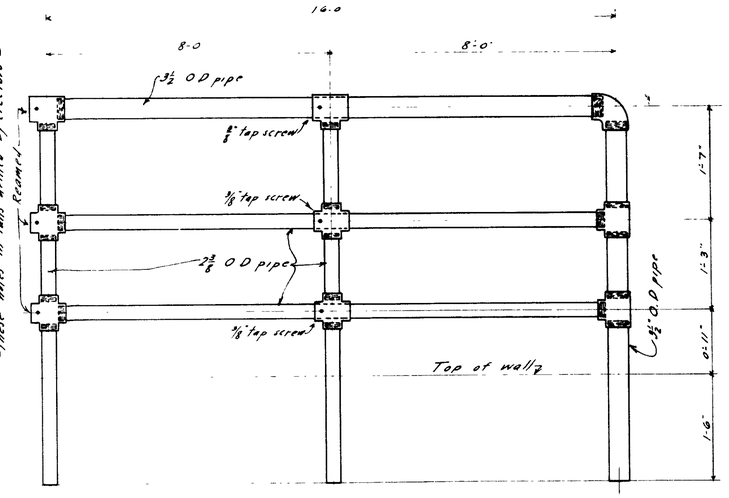

4 End Sections - R1

Pipe -
Top rail and end posts to be 3½" outside diameter extra strong black pipe
Two lower rails and intermediate posts to be 2⅜ outside diameter extra strong black pipe

Fittings -
Standard plain pattern malleable iron

Tap screws -
⅜" C S H machine screws

Approved. Alexander von Starbo. J. A.
Engineer of Bridge Design.

8-28-13

Approved. [illegible]
Engineer in charge of Bridges & Harbor

Approved: [illegible]
City Engineer

Approved: [illegible]
Commissioner of Public Works

1660820083
ENG. NO. 25-6-0-71

City of Chicago
Irving Park Boulevard Bridge.
Pipe Railing for East & West Approaches
Built by The Kettler Elliott Erection Co
Fabricated by Andrew J. Geary,
South Chicago, Ill.

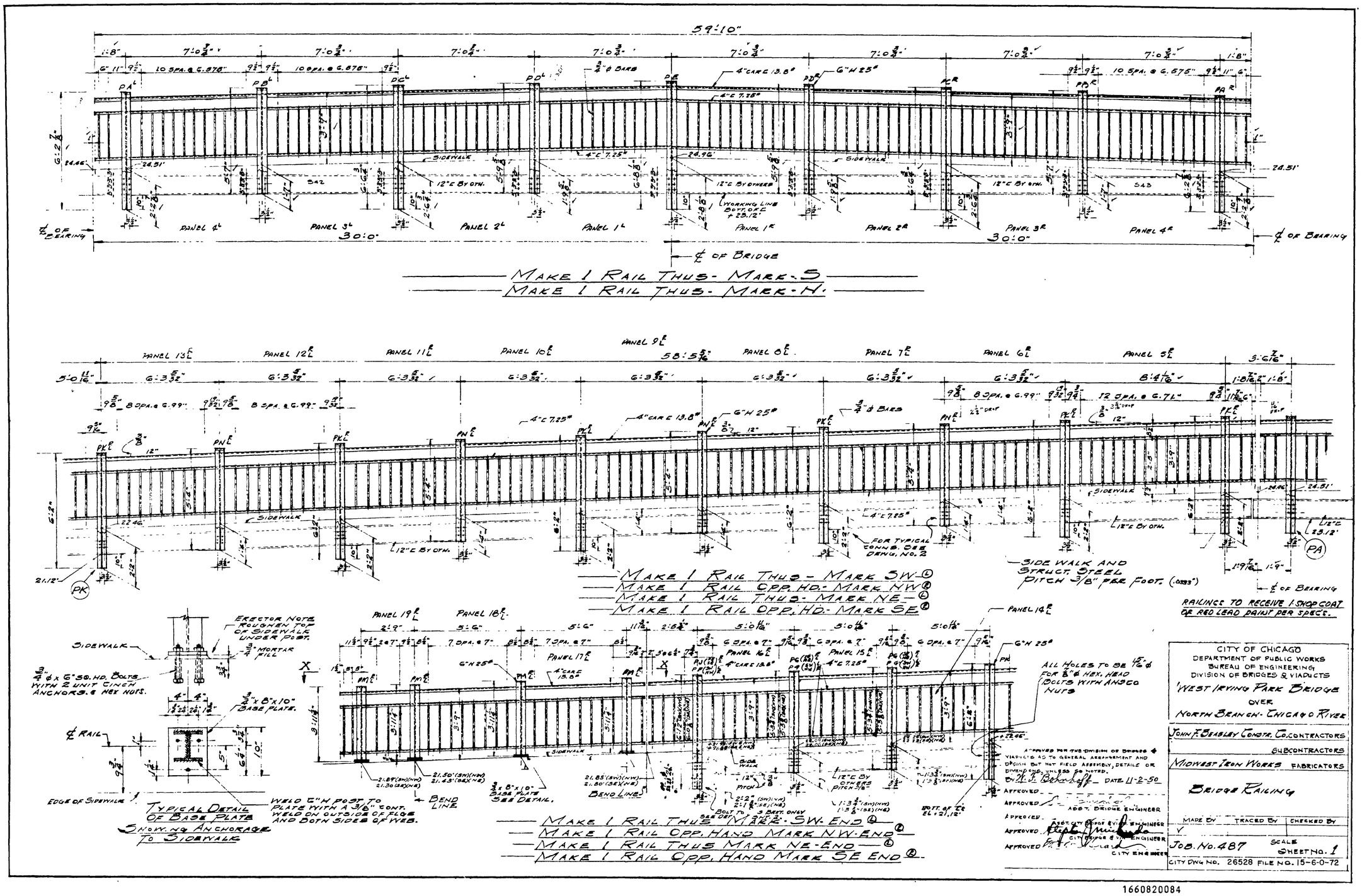

59'-10"
30'-0"
30'-0"
℄ OF BEARING
℄ OF BRIDGE
PANEL 4L
PANEL 3L
PANEL 2L
PANEL 1L
PANEL 1R
PANEL 2R
PANEL 3R
PANEL 4R
SIDEWALK
12"C BY OTH.
4"C 7.25#
4"CAR C 13.8#
6"H 25#
3/4"ϕ BARS
WORKING LINE BOTT. OF C +23.12'
MAKE 1 RAIL THUS - MARK - S
MAKE 1 RAIL THUS - MARK - H
PANEL 13L
PANEL 12R
PANEL 11L
PANEL 10L
PANEL 9L
PANEL 8L
PANEL 7R
PANEL 6R
PANEL 5R
58'-5 5/16"
FOR TYPICAL CONNS. SEE DRWG. NO. 2
SIDE WALK AND STRUCT. STEEL PITCH 3/8" PER FOOT. (.0333")
MAKE 1 RAIL THUS - MARK SW
MAKE 1 RAIL OPP. HD. - MARK NW
MAKE 1 RAIL THUS - MARK NE
MAKE 1 RAIL OPP. HD. - MARK SE
RAILINGS TO RECEIVE 1 SHOP COAT OF RED LEAD PAINT PER SPEC'S.
ERECTOR NOTE ROUGHEN TOP OF SIDEWALK UNDER POST.
3/4" MORTAR FILL
3/4"ϕ x 6" SQ. HD. BOLTS WITH 2 UNIT CINCH ANCHORS & HEX NUTS.
3/4" x 8" x 10" BASE PLATE.
℄ RAIL
EDGE OF SIDEWALK
TYPICAL DETAIL OF BASE PLATE SHOWING ANCHORAGE TO SIDEWALK
WELD 6"H POST TO PLATE WITH A 3/8" CONT. WELD ON OUTSIDE OF FLGE AND BOTH SIDES OF WEB.
PANEL 19L
PANEL 18L
PANEL 17L
PANEL 16L
PANEL 15L
PANEL 14L
BEND LINE
3/4" x 8" x 10" BASE PLATE SEE DETAIL.
BOLT TO SEE DET. SHT. 2
ALL HOLES TO BE 15/16"ϕ FOR 7/8"ϕ HEX. HEAD BOLTS WITH ANSCO NUTS
MAKE 1 RAIL THUS MARK - SW - END
MAKE 1 RAIL OPP. HAND MARK NW - END
MAKE 1 RAIL THUS MARK NE - END
MAKE 1 RAIL OPP. HAND MARK SE END
APPROVED FOR THE DIVISION OF BRIDGES & VIADUCTS AS TO GENERAL ARRANGEMENT AND DESIGN BUT NOT FIELD ASSEMBLY, DETAILS OR DIMENSIONS, UNLESS SO NOTED.
BY W. F. Bohnhoff DATE 11-2-50
APPROVED
ASST. BRIDGE ENGINEER
APPROVED
ASST. CITY BRIDGE & VIAD. ENGINEER
APPROVED
CITY BRIDGE & VIAD. ENGINEER
APPROVED
CITY ENGINEER
CITY OF CHICAGO
DEPARTMENT OF PUBLIC WORKS
BUREAU OF ENGINEERING
DIVISION OF BRIDGES & VIADUCTS
WEST IRVING PARK BRIDGE
OVER
NORTH BRANCH - CHICAGO RIVER
JOHN F. BEASLEY CONSTR. CO. CONTRACTORS
SUBCONTRACTORS
MIDWEST IRON WORKS FABRICATORS
BRIDGE RAILING
MADE BY
TRACED BY
CHECKED BY
JOB. NO. 487
SCALE
SHEET NO. 1
CITY DWG NO. 26528 FILE NO. 15-6-0-72

1660820084

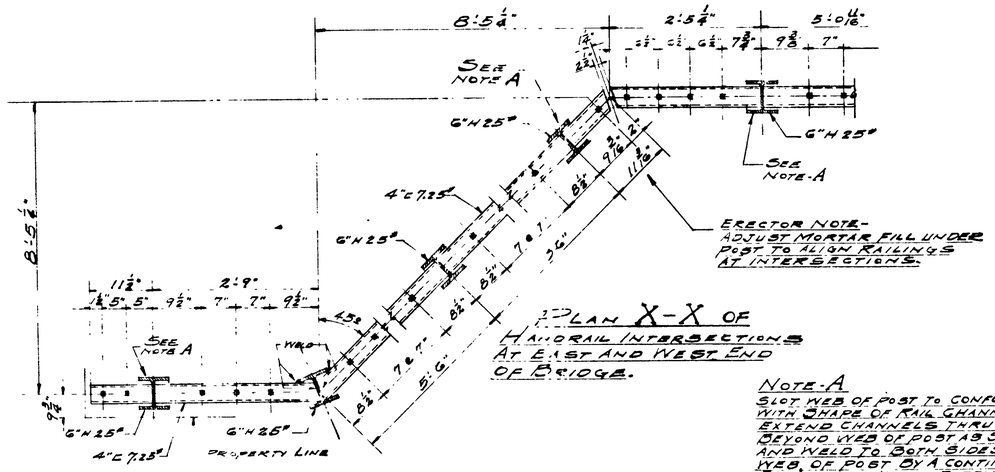

PLAN X-X OF HANDRAIL INTERSECTIONS AT EAST AND WEST END OF BRIDGE.

Note A
Slot web of post to conform with shape of rail channels. Extend channels thru and beyond web of post as shown and weld to both sides of web of post by a continuous 5/16" fillet weld extending around channels.

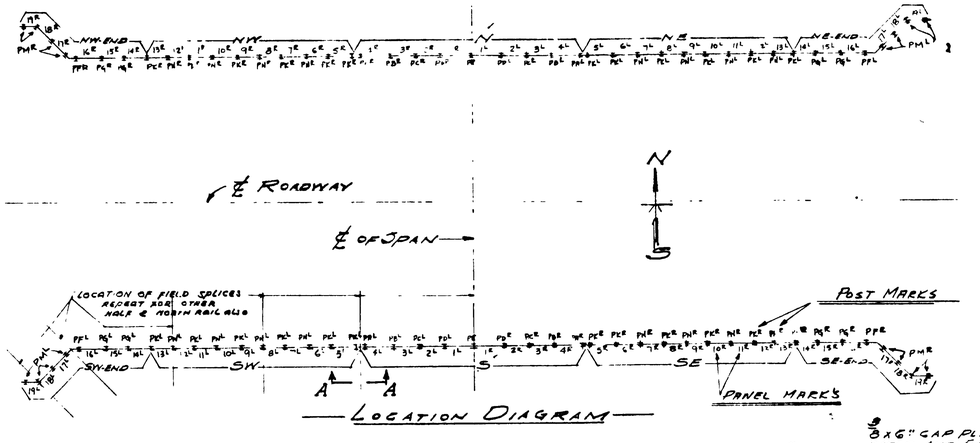

LOCATION DIAGRAM

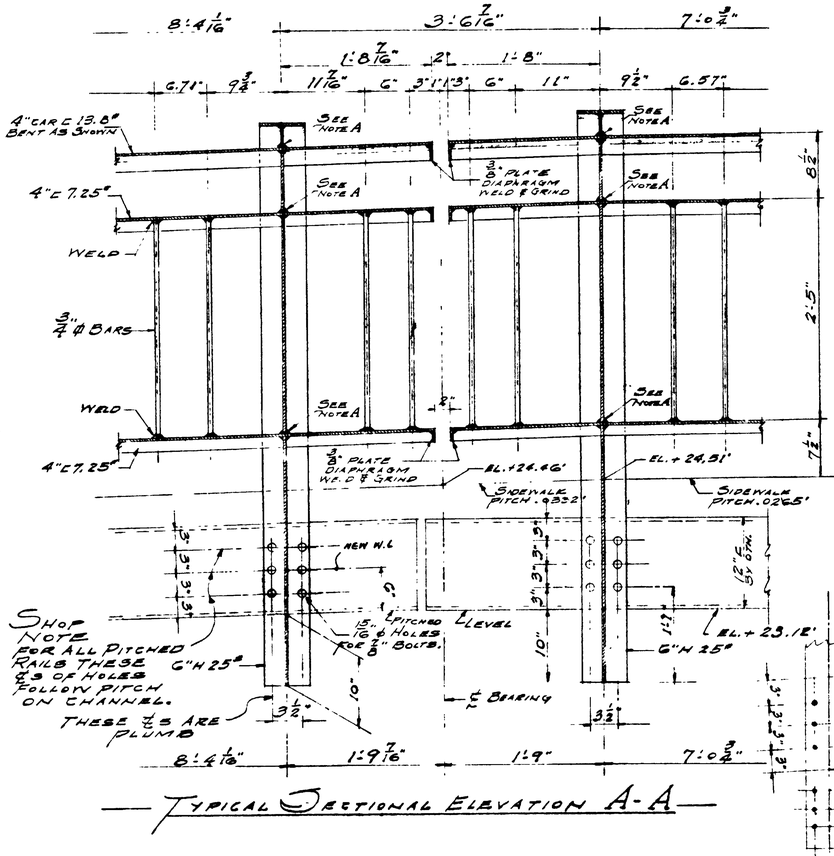

TYPICAL SECTIONAL ELEVATION A-A

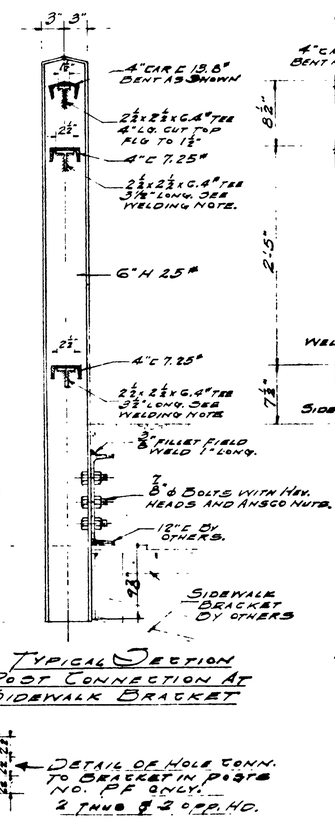

TYPICAL SECTION POST CONNECTION AT SIDEWALK BRACKET

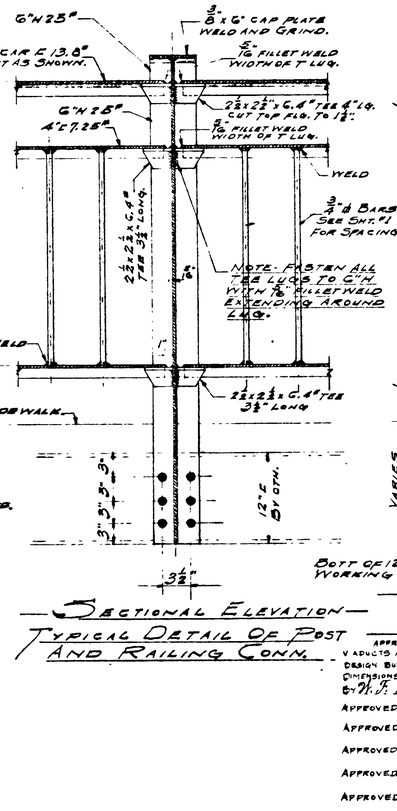

SECTIONAL ELEVATION TYPICAL DETAIL OF POST AND RAILING CONN.

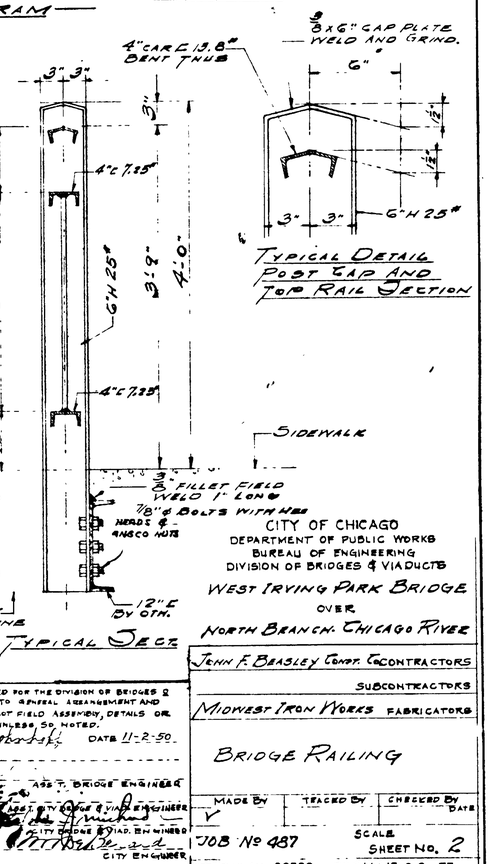

TYPICAL SECT.

TYPICAL DETAIL POST CAP AND TOP RAIL SECTION

APPROVED FOR THE DIVISION OF BRIDGES & VIADUCTS AS TO GENERAL ARRANGEMENT AND DESIGN BUT NOT FIELD ASSEMBLY, DETAILS OR DIMENSIONS, UNLESS SO NOTED.
By M. F. Bobrofsky DATE 11-2-50.
Approved _____ ASST. BRIDGE ENGINEER
Approved _____ ASST. CITY BRIDGE & VIA. ENGINEER
Approved _____ CITY BRIDGE & VIAD. ENGINEER
Approved _____ CITY ENGINEER

CITY OF CHICAGO
DEPARTMENT OF PUBLIC WORKS
BUREAU OF ENGINEERING
DIVISION OF BRIDGES & VIADUCTS

WEST IRVING PARK BRIDGE
OVER
NORTH BRANCH CHICAGO RIVER

John F. Beasley Const. Co. CONTRACTORS
SUBCONTRACTORS
Midwest Iron Works FABRICATORS

BRIDGE RAILING

MADE BY	TRACED BY	CHECKED BY	DATE
V			

JOB No 487 SCALE
SHEET No. 2
CITY DWG. No. 26529 FILE No. 15-6-0-73

1660820085

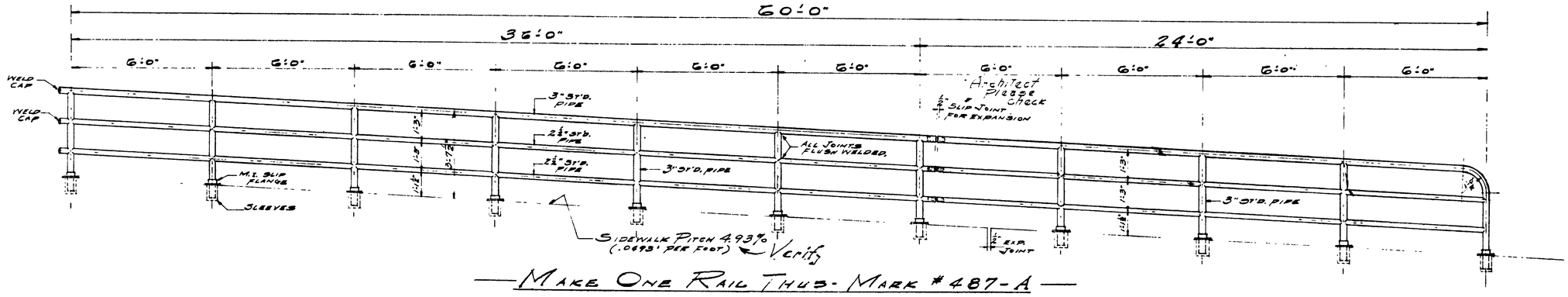

MAKE ONE RAIL THUS- MARK #487-A

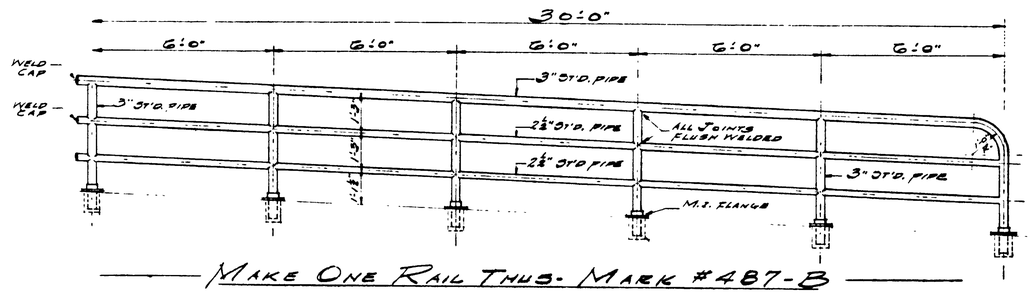

MAKE ONE RAIL THUS- MARK #487-B

Verify OK.
SIDEWALK PITCH 4.08% (.0408' PER FOOT)

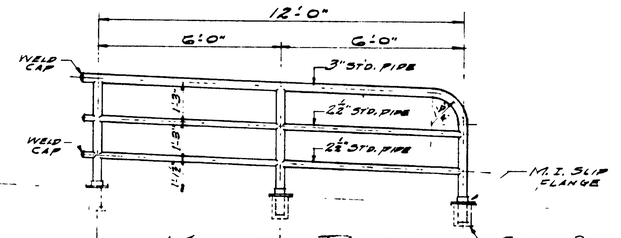

MAKE ONE RAIL THUS
MARK #487-C

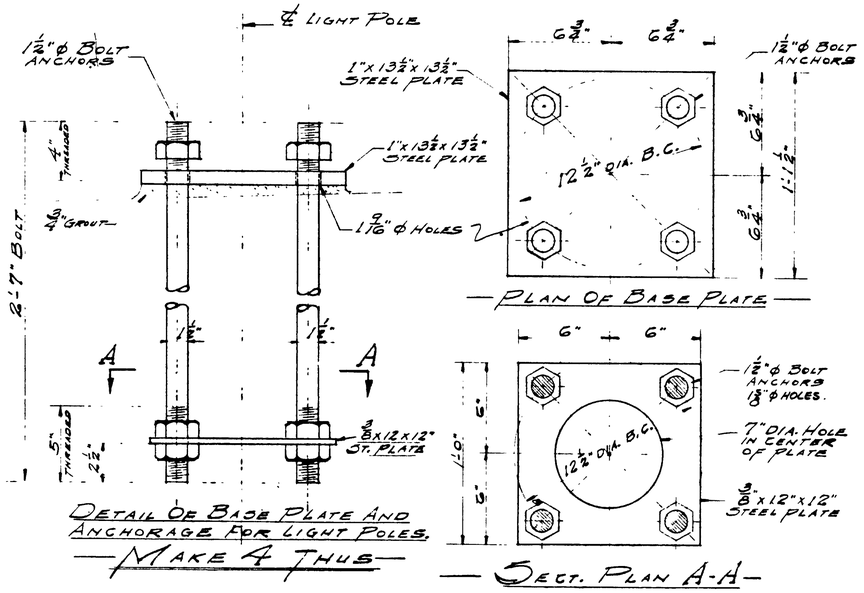

DETAIL OF BASE PLATE AND ANCHORAGE FOR LIGHT POLES.
MAKE 4 THUS

PLAN OF BASE PLATE

SECT. PLAN A-A

MATERIAL IN SHOP 6-17

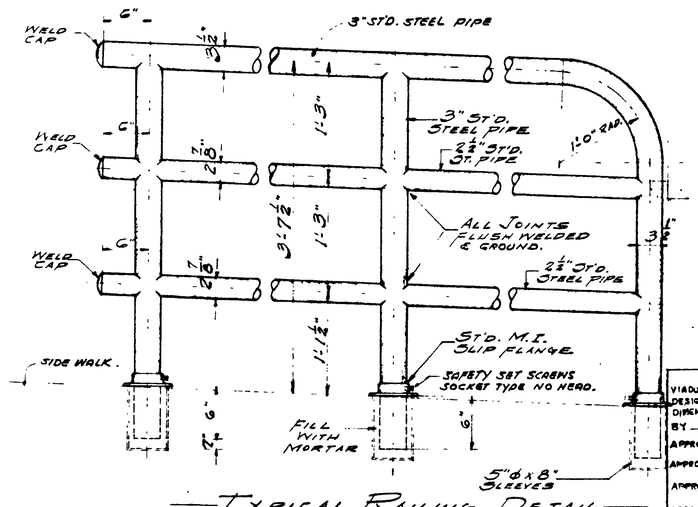

TYPICAL RAILING DETAIL

SLEEVES IN SHOP 6-17

NOTE:
PIPE RAILINGS SHALL BE ENTIRELY SHOP FABRICATED AND WELDED, AND SHALL BE HOT-DIP GALVANIZED AFTER THE WELDS HAVE BEEN GROUND. PIPE RAILING SHALL BE CHEMICALLY TREATED & SHALL RECEIVE 1 COAT OF RED LEAD & OIL AS PER SPEC'S

FIELD MEAS. SHALL BE CHECKED AFTER SLEEVES ARE SET.

FIELD MEASUREMENTS REQ'D.

PRINTS ISSUED.		
NO	FOR	DATE
3	APPROVAL	6/20
1	HERB	6/20
5	REAPPROVAL	8/11
1	SHOP	8/17
1	MEASUREMENTS	8/21
-	INSTALLED	11/27

APPROVED FOR THE DIVISION OF BRIDGES & VIADUCTS AS TO GENERAL ARRANGEMENT AND DESIGN BUT NOT FIELD ASSEMBLY, DETAILS OR DIMENSIONS, UNLESS SO NOTED
BY _____ DATE 11-2-50
APPROVED _____
APPROVED _____ ASSISTANT BRIDGE ENGINEER
APPROVED _____ CHIEF CITY BRIDGE & VIAD ENGINEER
APPROVED _____ CITY BRIDGE & VIAD ENGINEER
APPROVED _____ CITY ENGINEER

CITY OF CHICAGO.
DEPARTMENT OF PUBLIC WORKS
BUREAU OF ENGINEERING
DIVISION OF BRIDGES & VIADUCTS.
WEST IRVING PARK BRIDGE
OVER
NORTH BRANCH-CHICAGO RIVER

JOHN E. BEARLEY CONST CO. CONTRACTORS
SUBCONTRACTORS.
MIDWEST IRON WORKS FABRICATORS.

"BRIDGE RAILING"
PIPE RAILING & PLATES FOR LIGHT POLES.

MADE BY	TRACED BY	CHECKED BY
V		DATE

JOB No 487 SCALE
SHEET NO. 3-
CITY DWG NO. 26530 FILE NO. 15-6-0-74

1660820086

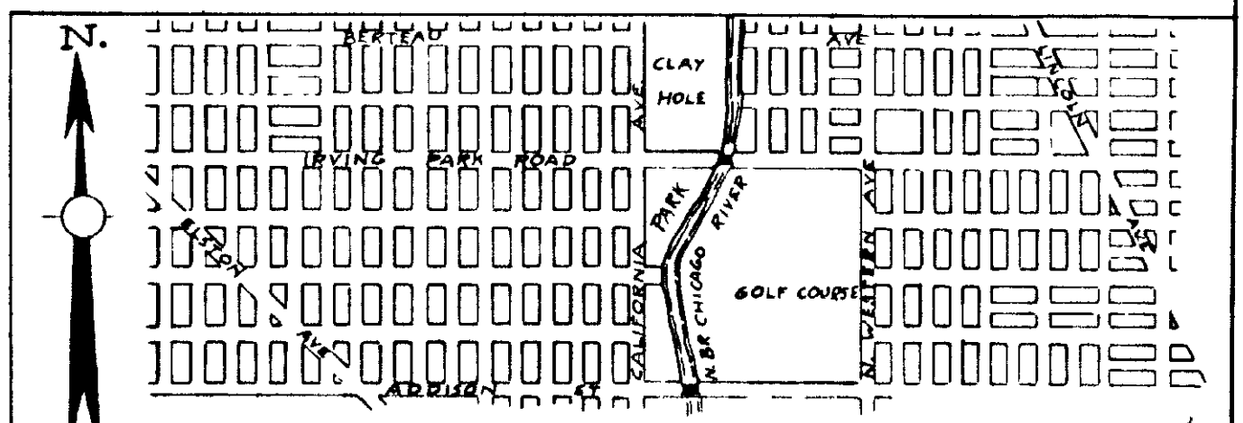

GENERAL MAP SHOWING LOCATION OF BRIDGE

0 1/4 1/2 3/4 SCALE IN MILES

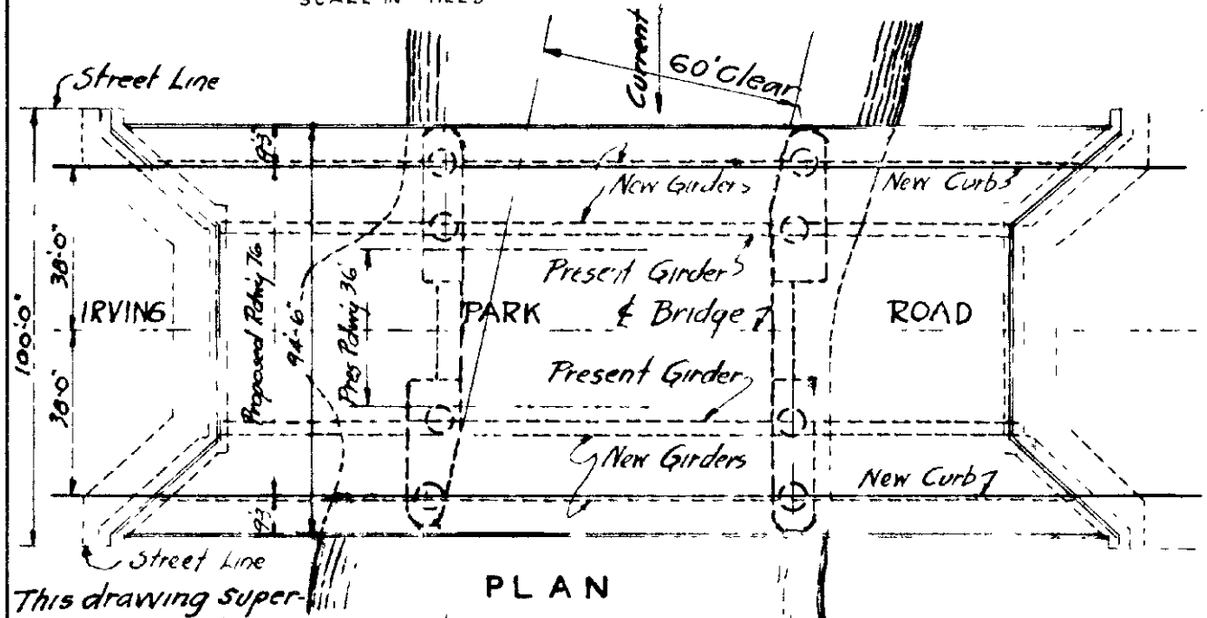

This drawing supersedes Drwg #16186

PLAN

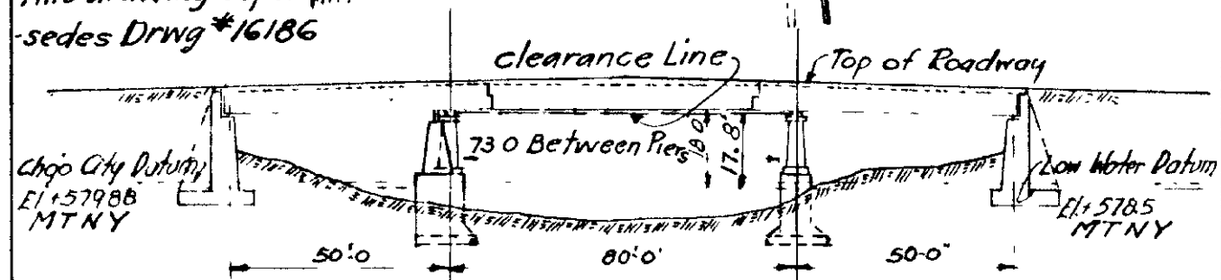

ELEVATION

Scale in Feet

1660820087

Correct Donald N. Becker
Engineer of Bridge Design

Approved
Asst Engineer of Bridges

Approved Stephen J. Michaelson
Engineer of Bridges

Approved
City Engineer

Approved
Commissioner of Public Works

CITY OF CHICAGO
DEPARTMENT OF PUBLIC WORKS
BUREAU OF ENGINEERING
DIVISION OF BRIDGES

PROPOSED WIDENING OF BRIDGE
AT
IRVING PARK ROAD
OVER
NORTH BRANCH
OF
CHICAGO RIVER

November 25, 1947

Drawing 16409
File 14-D1-1892

135 A per 2

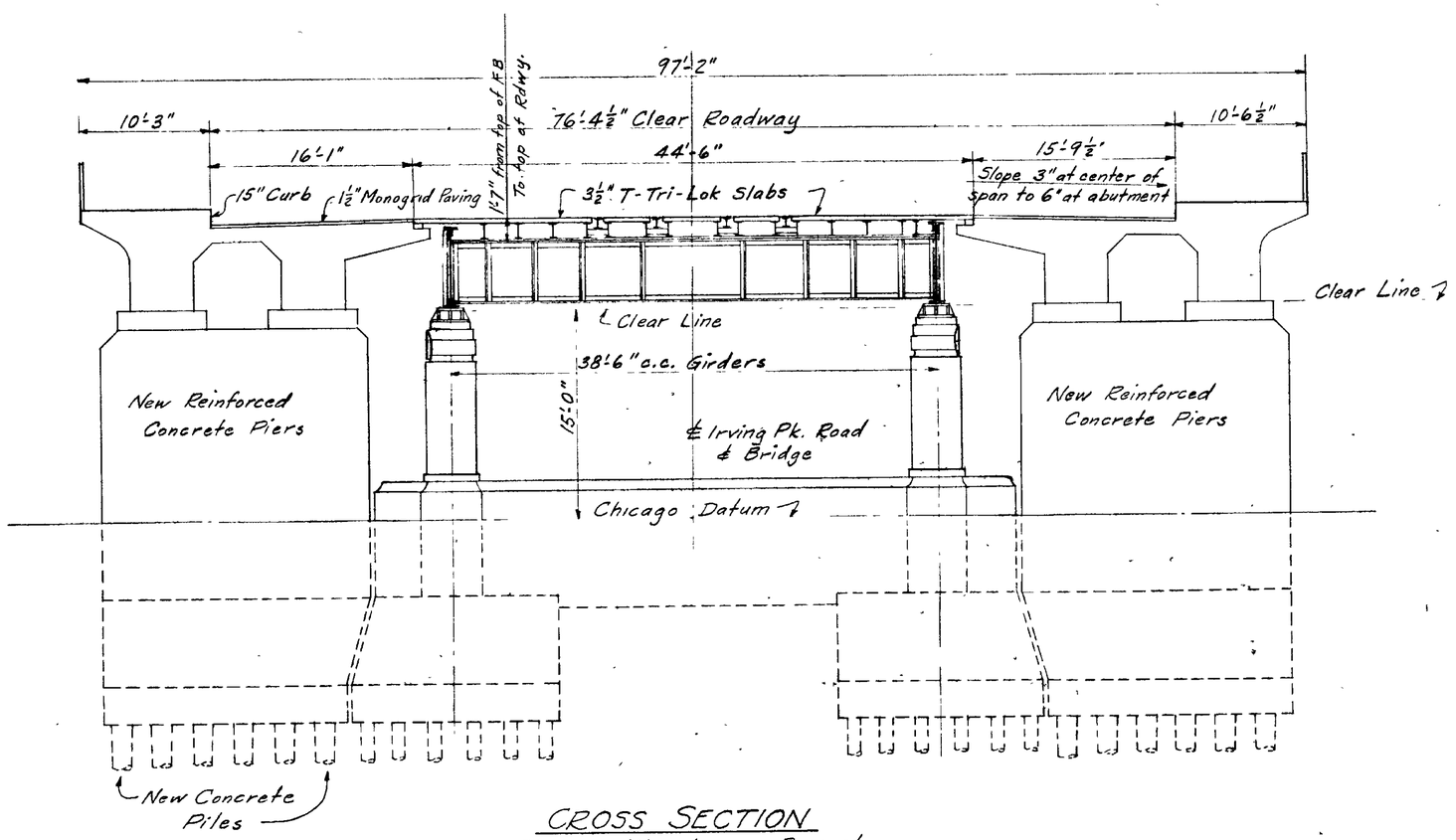

CROSS SECTION

Showing Alterations in Present Structure and Additional Reinforced Concrete Sections

IRVING PARK BOULD. BRIDGE.
WIDENING

DRWG. 46447

FILE NO. 15-E10-5

IRV.-2

Jan. 1940

1660820088

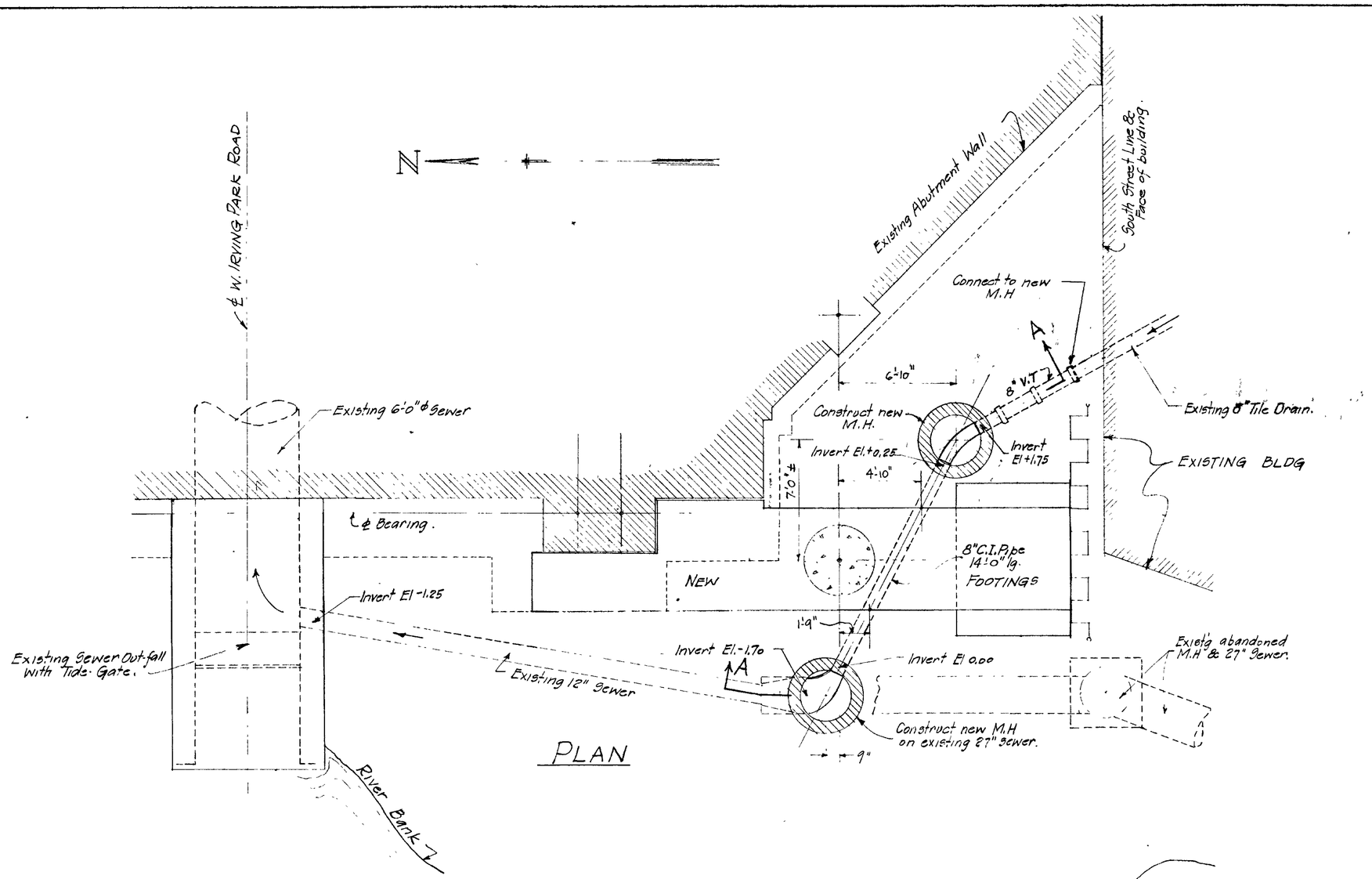

PLAN

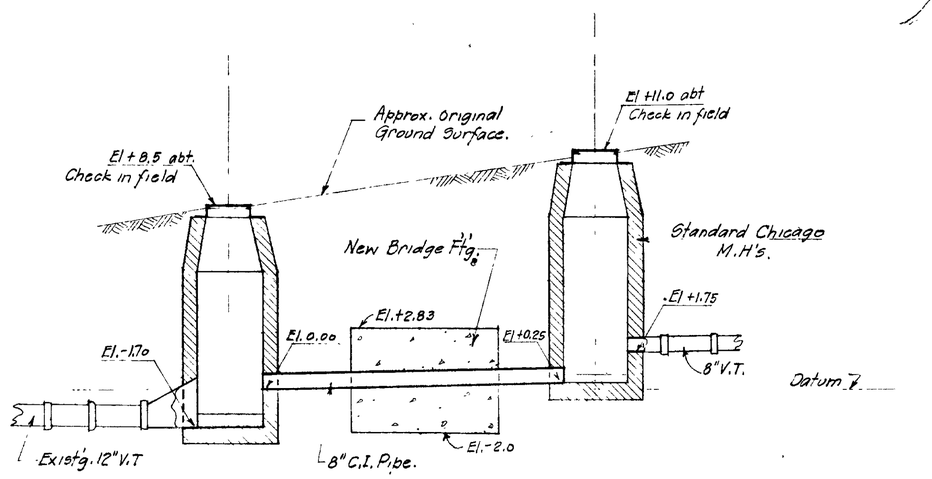

SECTION A-A

Correct Harry M. Forrey
Chief Engr. B. of S

Approved Thos. D. Garry
Bureau of Sewers

CITY OF CHICAGO
DEPARTMENT OF PUBLIC WORKS
BUREAU OF ENGINEERING
DIVISION OF BRIDGES & VIADUCTS

WIDENING - W. IRVING PARK RD. BRIDGE
RESTORATION OF SEWER CONNECTION
SOUTH-EAST SIDE

DRAWN	TRACED	CHECKED	IN CHARGE	DATE 4/24/50 SCALE 1/4" = 1'-0"
MK				

CORRECT — ASST BRIDGE ENGINEER
APPROVED — CITY ENGINEER
APPROVED — ASST CITY BRIDGE & VIADUCT ENGR
APPROVED — COMMISSIONER OF PUBLIC WORKS
APPROVED — CITY BRIDGE & VIADUCT ENGR

DRWG NO 4-6448
FILE NO 13-E10-6

135B Per 202
27 X 41

1660820089

FILE G-10

FILE G-10

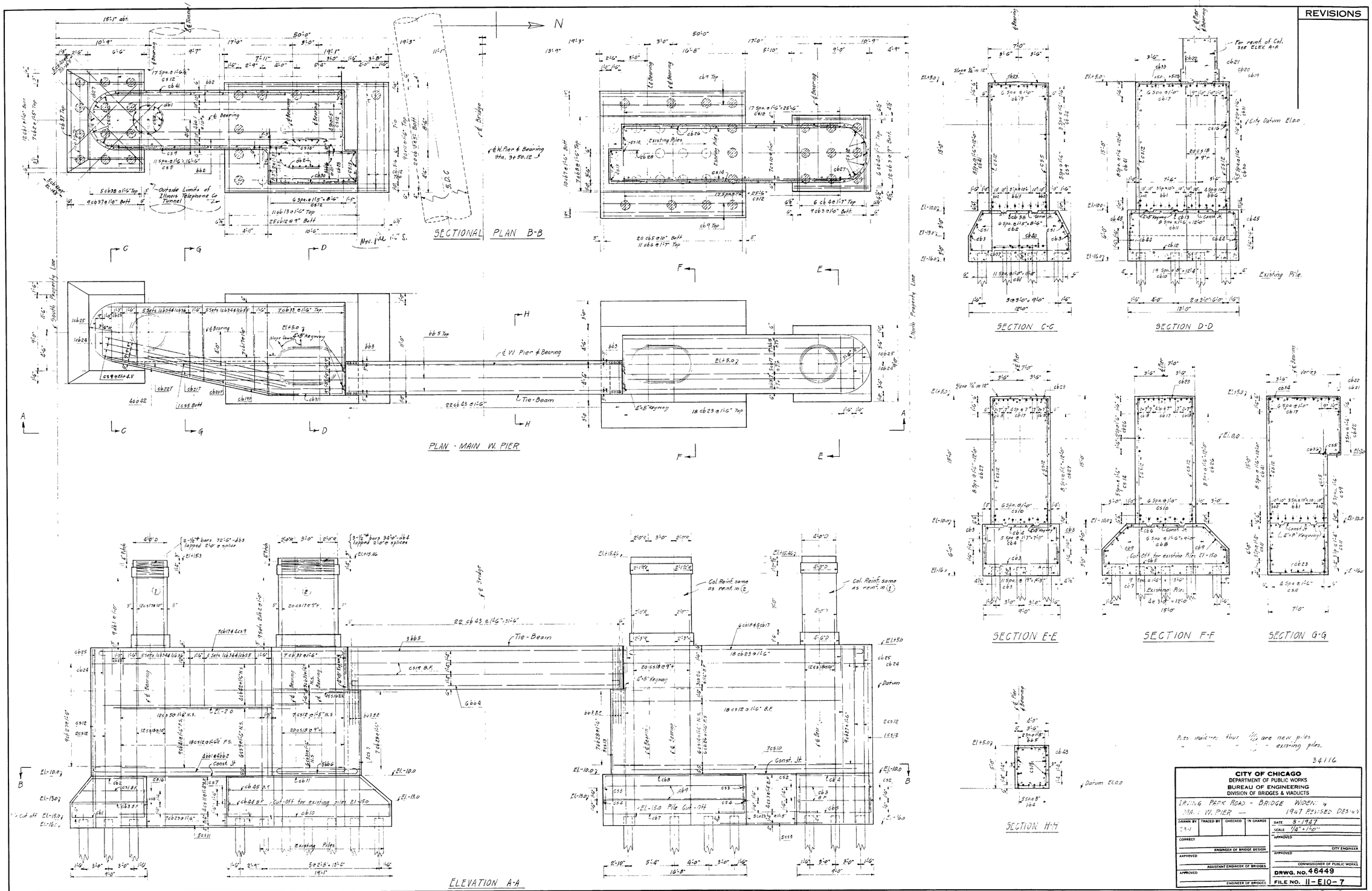
REVISIONS
SECTIONAL PLAN B-B
PLAN - MAIN W. PIER
ELEVATION A-A
SECTION C-C
SECTION D-D
SECTION E-E
SECTION F-F
SECTION G-G
SECTION H-H
Existing Piles
Tie-Beam
Outside Limits of Illinois Telephone Co Tunnel
Pile Cut-Off
Cut-Off for existing piles El-15.0
Col. Reinf. same as reinf. in (2)
Col. Reinf. same as reinf. in (1)
Piles indicated thus are new piles
" " " " existing piles.
34116
CITY OF CHICAGO
DEPARTMENT OF PUBLIC WORKS
BUREAU OF ENGINEERING
DIVISION OF BRIDGES & VIADUCTS
IRVING PARK ROAD - BRIDGE WIDENING
MAIN W. PIER — 1947 REVISED DESIGN
DRAWN BY 23-1
TRACED BY
CHECKED
IN CHARGE
DATE 8-1947
SCALE 1/4" = 1'-0"
CORRECT
ENGINEER OF BRIDGE DESIGN
APPROVED
ASSISTANT ENGINEER OF BRIDGES
APPROVED
ENGINEER OF BRIDGES
APPROVED
CITY ENGINEER
APPROVED
COMMISSIONER OF PUBLIC WORKS
DRWG. NO. 46449
FILE NO. 11-E10-7
1660820090
I.W.-1C
135A-Per 204

N

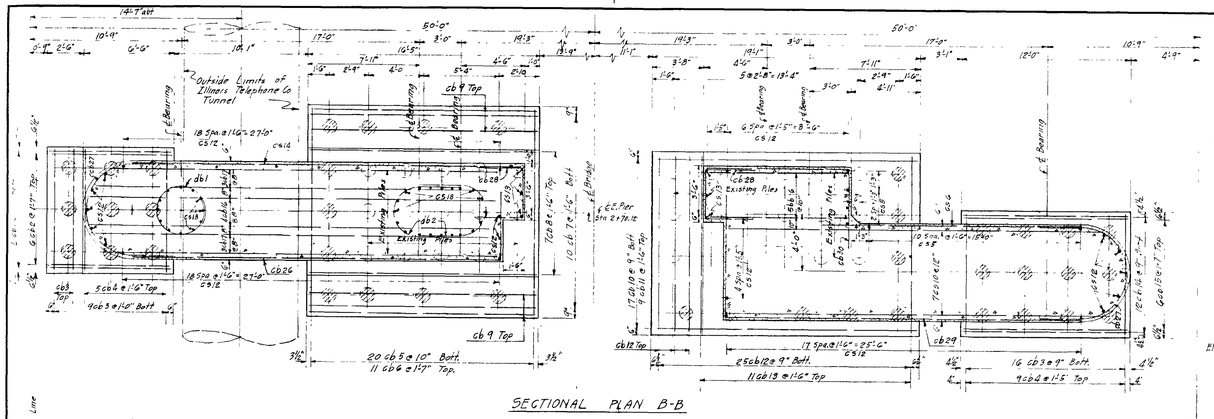

SECTIONAL PLAN B-B

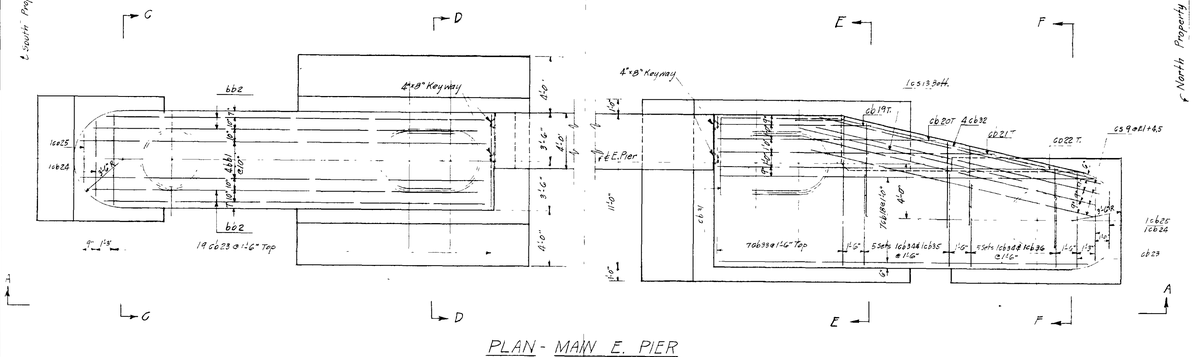

PLAN - MAIN E. PIER

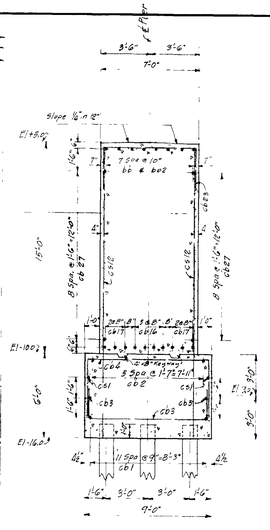

SECTION C-C

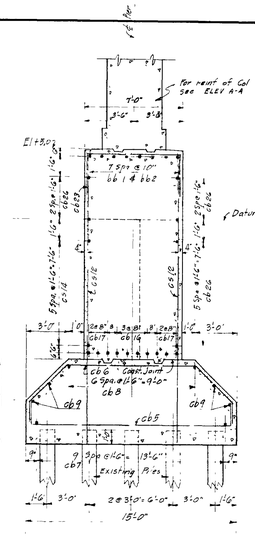

SECTION D-D

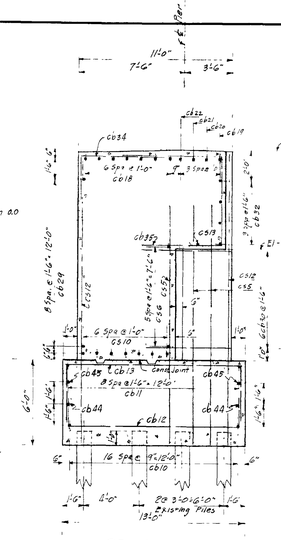

SECTION E-E

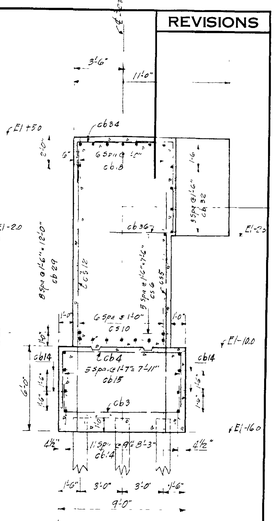

SECTION F-F

REVISIONS

BILL OF REINFORCING BARS

MARK	NUMBER	SIZE	LENGTH	TYPE	LOCATION: EAST PIERS FOOTS	EAST PIERS STEM	EAST PIERS COL. TIE-BKT.	WEST PIERS FOOTS	WEST PIERS STEM	WEST PIERS COL. TIE-BKT.	BENDING A	B	C	D
cb1	8	#8	32'-10"	IV	4			4			28'-0"	2'-3½		
" 2	8	"	29'-6"	IV	4			4			26'-6"	2'-3½		
" 3	32	"	10'-10"	IV	16			16			8'-0"	2'-3½		
" 4	12	"	36'-8"	IV			6			6	31'-6"	2'-3½		
" 5	6	"	38'-0"	I			3			3	3'-0"	35'-0"	3'-0	
" 6	10	"	18'-3"	IV	5			5			9'-5"	2'-3½		
cb1	4	7/8"	7'-6"	Str	2			2						
" 2	10	"	8'-6"	"	6			4						
" 3	17	"	12'-0"	"	2			15						
" 4	4	"	14'-6"	"	2			2						
" 5	30	"	19'-9"	"	14			16						
" 6	6	"	18'-6"	"	6									
" 7	4	"	12'-6"	"	2			2						
" 8	1	"	11'-6"	"				1						
" 9	14	"	21'-0"	"	4				10					
" 10	14	"	24'-3"	"	7				7					
" 11	26	"	14'-0"	"	13			13						
" 12	158	"	20'-6"	"	80				78					
" 13	13	"	18'-6"	"	7				6					
" 14	12	"	22'-6"	"	6				6					
" 15	13	"	9'-0"	"	13									
" 16	3	"	10'-0"	"	1			1	1					
" 17	128	"	10'-3"	"		64			64	64				
" 18	168	"	20'-0"	"	64			64		64				
" 19	8	"	31'-9"	"			4			4				
cb1	24	7/8"	15'-0"	I	12			12			1'-6"	8'-6"	3'-0	
" 2	13	"	15'-6"	II	6			7			4'-6"	6'-0	2'-6	2'-8
" 3	56	"	18'-6"	I	29			27			2'-0"	8'-6"	2'-0	
" 4	26	"	16'-6"	I	14			12			4'-0"	8'-6"	2'-0	
" 5	40	"	17'-6"	I	20			20			1'-6"	16'-6"	1'-6	
" 6	22	"	19'-6"	III	11			11			8'-8"	2'-8	9'-0	
" 7	20	"	20'-0"	I	10			10			2'-0"	16'-0"	2'-0	
" 8	14	"	21'-0"	I	7			7			4'-0"	16'-0"	4'-0	
" 9	9	"	21'-0"	I	4			5			2'-0"	19'-0"	2'-6	
" 10	37	"	23'-0"	I	17			20			1'-6"	18'-6"	3'-0	
" 11	18	"	25'-6"	II	9			9			4'-6"	15'-0"	3'-7	2'-9
" 12	56	"	19'-6"	I	28			28			2'-0"	12'-6"	2'-0	
" 13	22	"	20'-6"	I	11			11			4'-0"	12'-6"	4'-0	
" 14	16	"	18'-6"	I	16						8'-0"	11'-6"	2'-0	
" 15	6	"	19'-6"	I	6						4'-0"	11'-6"	4'-0	
" 16	4	"	30'-10"	IV		4					28'-0"	2'-3½		
" 17	18	"	29'-2"	VI		9			12		25'-6"	2'-3½		
" 18	13	"	28'-6"	IV		7			6		25'-6"	2'-3½		
" 19	2	"	18'-0"	V		1			1		10'-7"	2'-3½		
" 20	2	"	16'-6"	V		1			1		15'-1"	2'-3½		
" 21	2	"	22'-6"	V		1			1		19'-1"	2'-3½		
" 22	2	"	25'-0"	V		1			1		23'-7"	2'-3½		
" 23	62	"	12'-6"	I		10		12	20		3'-0"	6'-6	3'-0	
" 24	4	"	11'-3"	I		2			2		9'-0"	5'-3	3'-0	
" 25	4	"	9'-6"	I		2			2		3'-0"	3'-0	3'-0	
" 26	24	"	30'-6"	VI		12			12		26'-0"	2'-6		
" 27	36	"	16'-3"	III		18			18		3'-0"	3'-3		
" 28	28	"	18'-6"	I		14			14		5'-6"	3'-6	3'-6	
" 29	9	"	32'-0"	VI		9					25'-0"	9'-6		
" 30	12	"	15'-6"	VI		6			6		10'-0"	5'-6		
" 31	6	"	16'-0"	III		3			3		5'-6"	8'-6		
" 32	4	"	21'-10"	VIII		4					18'-6"	3'-5	0'-9	
" 33	16	"	19'-6"	I		7			7		3'-0"	18'-6"	3'-0	
" 34	20	"	9'-0"	VI		10			10		2'-0"	3'-0		
" 35	10	"	19'-0"	I		5			5		6'-6"	6'-0	6'-0	
" 36	10	"	16'-6"	I		5			5		5'-6"	6'-6	4'-6	
" 37	10	"	16'-6"	I				10			1'-6"	11'-6	1'-6	
" 38	5	"	17'-9"	III				5			5'-7"	1'-2	8'-8	
" 39	1	"	16'-0"	I				1			3'-0"	10'-0"	3'-0	
" 40	10	"	13'-10"	II					10		11'-0"	0 3/4		
" 41	9	"	35'-0"	XI				7	9		26'-0"	9'-0		
" 42	4	"	23'-6"	VII					4		19'-6"	3'-9	0'-9	
" 43	44	"	16'-6"	XI				22		22	3'-6"	6'-8		
" 44	4	"	20'-6"	I	2			2			3'-0"	18'-6"	3'-0	
" 45	4	"	23'-0"	I	2			2			3'-0"	17'-9"	3'-0	
cb1	36	1"	19'-8"	IX		18			18		1'-7½			
" 2	72	"	11'-1"	VII		36			36		3'-0"	1'-7½		
" 3	8	"	32'-6"				4			4	Circular Spiral			
" 4	12	"	34'-0"	X			6			6	Oval Spiral			

TYPES OF BENT BARS

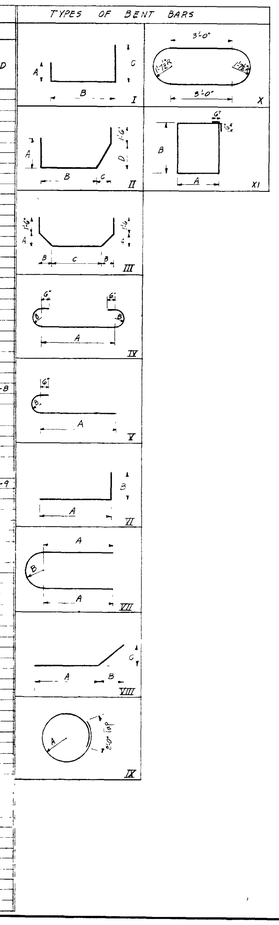

Piles indicated thus ⊙ are new piles
" " " ⊗ are existing piles

3211G

CITY OF CHICAGO
DEPARTMENT OF PUBLIC WORKS
BUREAU OF ENGINEERING
DIVISION OF BRIDGES & VIADUCTS

TRIN 7 Pkg - Rd - BRIDGE WIDENING
...IA. E PIER - 1947 REVISED DESIGN

DRAWN BY	TRACED BY	CHECKED	IN CHARGE
CSJ			

DATE 8-19-47
SCALE 1/4" = 1'-0"

CORRECT
ENGINEER OF BRIDGE DESIGN
APPROVED
ASSISTANT ENGINEER OF BRIDGES
APPROVED
ENGINEER OF BRIDGES

APPROVED
CITY ENGINEER
APPROVED
COMMISSIONER OF PUBLIC WORKS

DRWG. No. 46450
"IL" E NO. 11-E10-8

1660820091

135A - Per 205

W. IRVING PARK ROAD - N. PULASKI RD. TO N. ASHLAND AV.	NO OF SHEETS	SHEET NO
SECTION W.IRVING PARK ROAD - S.A. 141 - 0709 C.S.	4	1

CONVENTIONAL SIGNS

- Concrete sidewalk to be constructed
- 32 70 — Elevation of top of pavement at point indicated
- 32 66 — Elevation of top of curb at point indicated
- 32.40 — Elevation of flow line of gutter at point indicated
- Existing catch basin to be adjusted
- Catch basin to be constructed
- Existing catch basin to be filled
- Existing inlet to be adjusted
- Inlet to be constructed
- Existing inlet to be filled
- Existing manhole to be adjusted
- Manhole to be constructed
- El 16.4 — Fig "El 16.4" indicates bottom of sewer connection at existing sewer
- 75'-10" Sewer — Storm sewer to be constructed showing length and diameter
- Tree to be planted
- Property line / 7' / Curb line — Wall to be built at new curb line. Figure indicates height of vault
- Property line / 7' / Curb line — Wall to be built at property line Figure indicates height of vault
- (170) — ESTABLISHED CURB GRADE

BUREAU OF STREETS
DEPARTMENT OF STREETS AND ELECTRICITY
CITY OF CHICAGO

JOSEPH J. BUTLER — SUPERINTENDENT OF STREETS

LLOYD M. JOHNSON — COMMISSIONER OF STREETS & ELECTRICITY

N

PLANS FOR IMPROVING
W. IRVING PARK ROAD
N. PULASKI RD. TO N. ASHLAND AV. 12' WIDE MEDIAN STRIP.

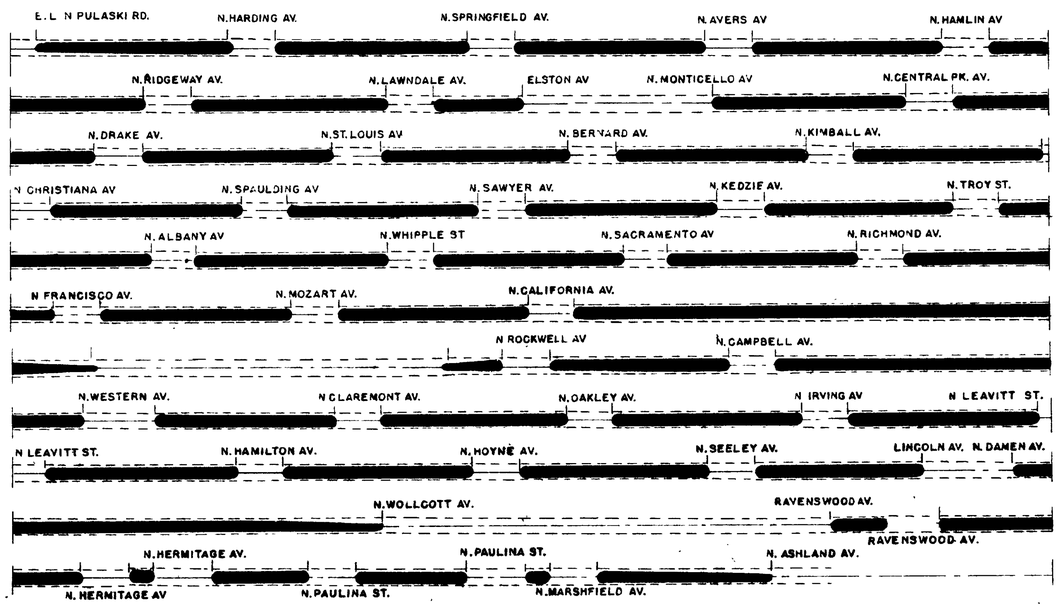

LAYOUT
SCALE 1 INCH = 100 FEET

TOTAL LENGTH TO BE IMPROVED - 15852.6 FT. - 3.0024 MI
NET LENGTH 11713.2 FT. 2.2184 MI.

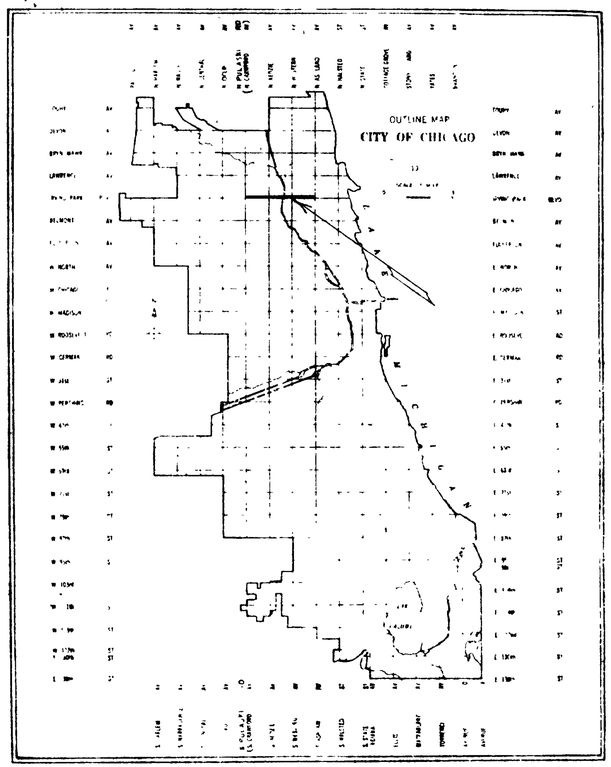

INDEX OF SHEETS

SHEET NO.	DESCRIPTION
1	TITLE PAGE
2	PLAN LAYOUT
3	MEDIAN STRIP DETAILS - CROSS SECTIONS
4	N.H. TYPE I FRAME & LID

Survey by C. J. WOODWARD — Design by A. OELKERS

Drawn by E. T. JORGENSEN — Checked by J. CASTATER

APPROVED

Asst. Engineer in Charge

Date 5-23-'49

Engineer of Streets

1660820092

DRWG. 46451 — FILE NO. 25—E 10—9

W. IRVING PARK ROAD (MEDIAN STRIP) FROM N. PULASKI RD. TO N. ASHLAND AV. FILE 16

PLAN LAYOUT SHOWING LENGTHS OF 12' WIDE MEDIAN STRIP BETWEEN N. PULASKI RD. & N. ASHLAND AV.-SECTION S.A.141-0709 C.S.

W. IRVING PARK ROAD - N. PULASKI RD. TO ASHLAND AV.	NO OF SHEETS	SHEET NO
SECTION W. IRVING PARK ROAD-S. A. 141-0709 C.S.	4	2

N

N. PULASKI RD. — N. HARDING AV. — N. SPRINGFIELD AV — N AVERS AV. — N. HAMLIN AV.

+76.3 (19.45) 135 +43 +08.8 (19.00) 140 +76.45 +42.3 (18.5) +09.65 +75.8 (18.0) 145 +42.9 +08.9 (17.5) 150

150'

N. RIDGEWAY AV. — N. LAWNDALE AV. — N. ELSTON AV. — N. MONTICELLO AV. — N CENTRAL PARK AV. — N DRAKE AV

150 +76.4 +42.3 (17.1) 17.10 +10 +76 (17.1) 155 +05.3 16 87 16.67 +16.0 (16.6) 16 59 160 +76.4 16.70 +42 (16.4) 16.55 +09.6 16 45 +75.4 (17.1) 165

N ST. LOUIS AV. — N. BERNARD ST. — N. KIMBALL AV. — N CHRISTIANA AV. — N. SPAULDING AV.

16.35 +42.7 16 08 +08 (15.8) 15.99 170 +76.2 15.96 +42 (15.7) 15.92 +09.8 15.80 +79.9 (15.5) 175 15.71 +46 15.58 +11.7 (15.5) 15.50 180 +76.6 15 28 +42.3 (15.15)

N SAWYER AV. — N. KEDZIE AV. — N. TROY ST — N. ALBANY AV. — N. WHIPPLE ST.

15 08 +10.2 15 11 +75.8 (14.85) 185 14.90 +43.4 14.70 +09.1 (14.8) 14 45 190 +75.3 T4 50 +31.4 (14.35) +07.4 14 25 +73.8 (14.0) 195 +39.8 13 85 +05.6

N. SACRAMENTO AV. — N. RICHMOND AV. — N. FRANCISCO AV. — N. MOZART AV

+05.6 (13.7) 200 +72.4 13 70 +38.4 (13.4) +05 13.50 +1 (13.3) 205 +37.5 13.21 +03.2 (13.0) 210 +69.2 1290 +36.2 (12.75) +02.2

N. ROCKWELL ST.

N. CALIFORNIA AV. — 652' W. OF ROCKWELL — PROPOSED BRIDGE WITH 3' MEDIAN STRIP — 225' W. OF ROCKWELL

+68 (12.5) 215 12 63 220 +47 12.2 +97 496' 225 21.4 +93.2 75' +68 +34.2 (12.2) 230 150'

N. MAPLEWOOD AV. — N. CAMPBELL AV. — N. WESTERN AV. — N CLAREMONT AV.

+83.8 12.10 +49.3 (12.1) +97.3 12.22 +63.2 (12.1) 235 240 (12.0) +45.2 12.05 +46.3 (12.5) +92.7 12.38 +58.4 (12.4) 245

N. OAKLEY AV. — N. BELL AV, — N. LEAVITT AV. — N. HAMILTON AV. — N HOYNE AV

+22 4 12.90 +88.4 (12.8) 250 +52.7 14.42 +18.7 (14.3) +03.2 15.80 +48.9 (18.0) 255 +12.6 16.40 +18 (18.5) 260 +43.8 17.00 +09.8 (16.8)

N. SEELEY AV. — LINCOLN AV. — N. DAMEN AV. — N WOLCOTT AV.

+73.9 17.38 +39 9 (17.4) 265 +76.1 17.98 18.0 +98.0 (18.0) 18.09 270 150' +65 18.60 (18.7F) 275

N W ELEVATED — COLUMNS IN RDWY — N. ASHLAND AV.

N RAVENSWOOD AV. — C.N.W R.R. — N RAVENSWOOD AV. — N.HERMITAGE AV. — N. PAULINA ST.

(18.7) 14.83 +65 (16.0) 280 +65 15.20 +29.2 (16.0) (19.0) +67.2 18.98 +33.2 +79.6 285 19.00 +59 (18.0) +82.5 19.03 +48.6 (19.0) (19.0) +09.9 19.14 +89.5 +11.3 290 +77.3 (18.0) 150' (18.0) +28.9 190

EL. LOW IRON 27.96
CLEARANCE 13.65

N. HERMITAGE AV. — N. PAULINA ST. — N. MARSHFIELD AV.

SCALE 1"=50'

1660820093

W. IRVING PARK ROAD- N. PULASKI RD. TO N. ASHLAND AV.	NO OF SHEETS	SHEET NO
SECTION W. IRVING PARK ROAD-S.A.141-0709 C.S.	4	3

CROSS SECTION OF EXISTING PAVEMENT

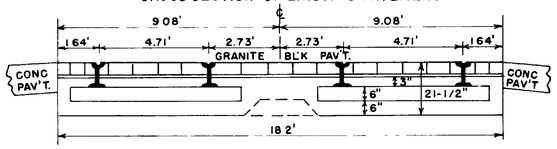

EXISTING MEDIAN STRIP WITH
CTA CLASS 2A TRACK CONSTRUCTION

CROSS SECTION OF PROPOSED MEDIAN STRIP

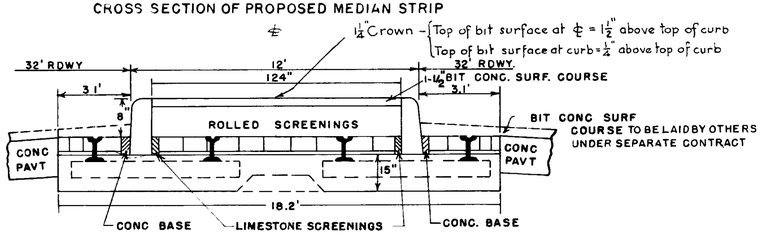

CONTRACTION JOINTS IN CURB TO BE PLACED 8 FT FROM END OF MEDIAN STRIP AND SPACED NOT TO EXCEED 25 FT. APART. THEY SHALL BE 5" DEEP AND NOT MORE THAN 1/8" WIDE.
WORK STOPPAGE SHALL BE AT LOCATION OF A CONSTRUCTION JOINT AND SHALL BE VERTICAL AND SQUARE. THE EXPOSED FACE OF CURB AT JOINT SHALL BE SMOOTHED WITH A 1/8" EDGER

CONTRACTION JOINT

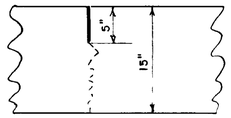

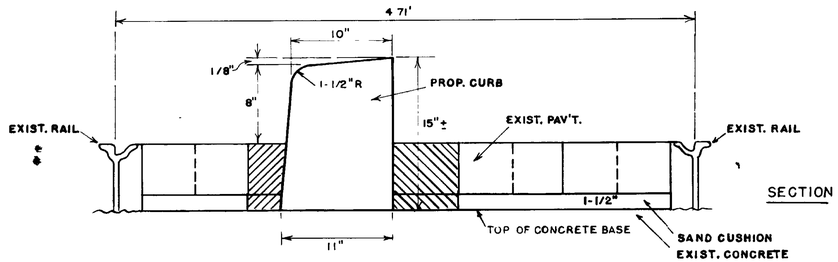

SECTION A-A

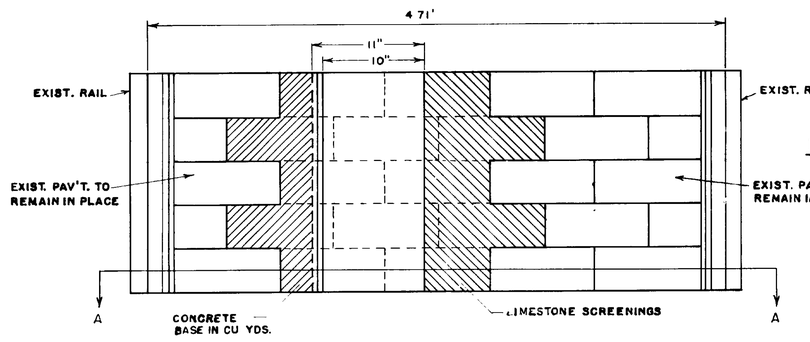

PLAN

THE TOP OF CURB SHALL BE BUILT AT AN ELEVATION 8" ABOVE THE PRESENT PAVEMENT EXCEPT IN SUBWAYS WHERE IF ORDERED BY THE ENGINEER THE ELEVATION MAY BE REDUCED TO 6" ABOVE THE PAVEMENT

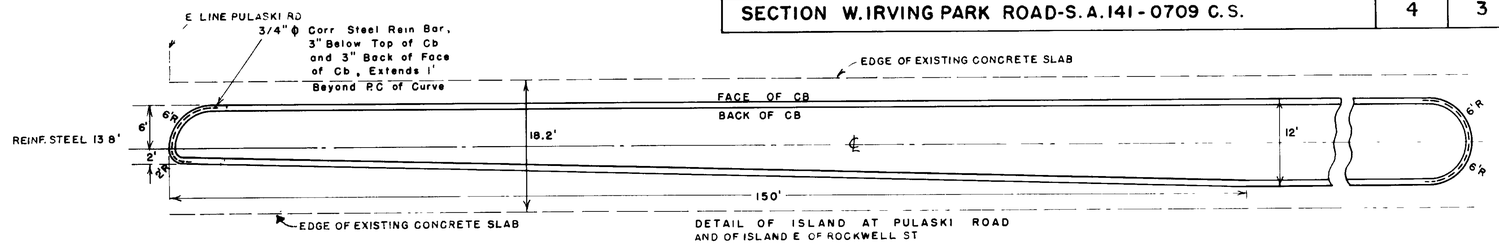

DETAIL OF ISLAND AT PULASKI ROAD AND OF ISLAND E OF ROCKWELL ST

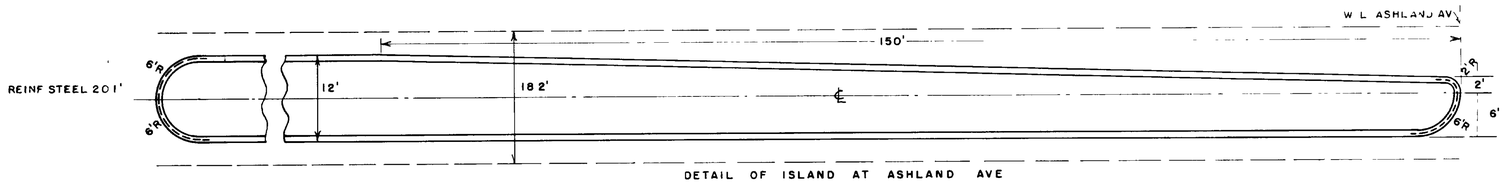

DETAIL OF ISLAND AT ASHLAND AVE

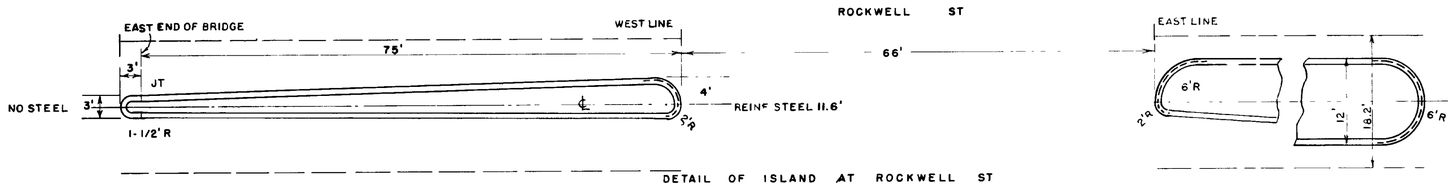

DETAIL OF ISLAND AT ROCKWELL ST

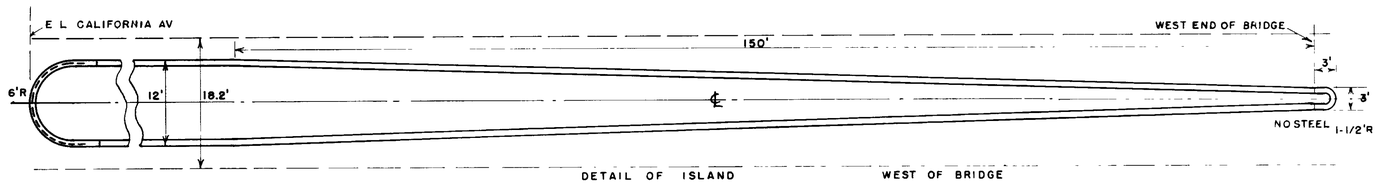

DETAIL OF ISLAND WEST OF BRIDGE

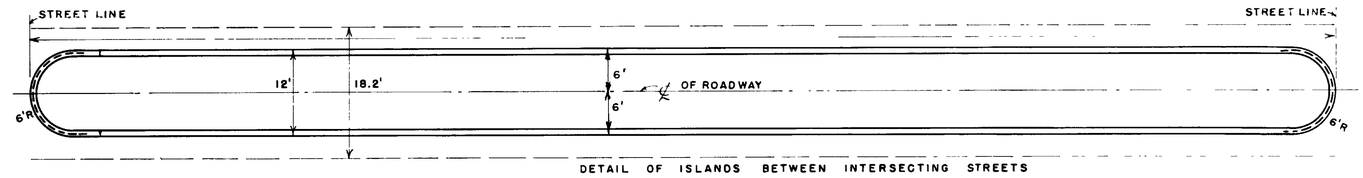

DETAIL OF ISLANDS BETWEEN INTERSECTING STREETS

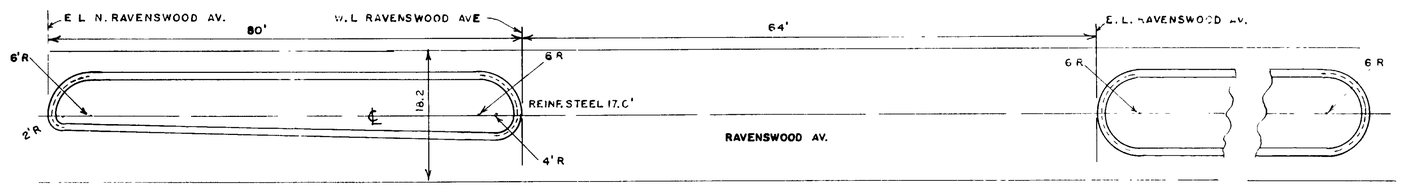

DETAIL & PLAN AT RAVENSWOOD AV.

ISLANDS EXTEND FROM STREET TO STREET LINE EXCEPT WHERE OTHERWISE SHOWN.

FLASHER SIGNALS TO BE INSTALLED BY THE BUREAU OF ELECTRICITY

1660820094

W. IRVING PARK ROAD - N. PULASKI RD. TO N. ASHLAND AV.	NO OF SHEETS	SHEET NO
SECTION W. IRVING PARK ROAD S.A. 141-0709 C.S.	4	4

CATCH BASIN

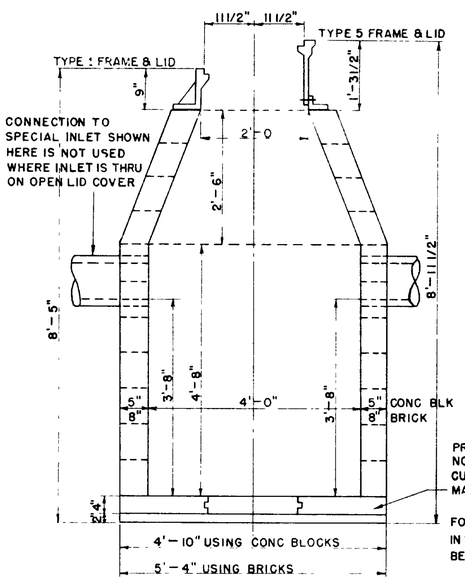

MANHOLE

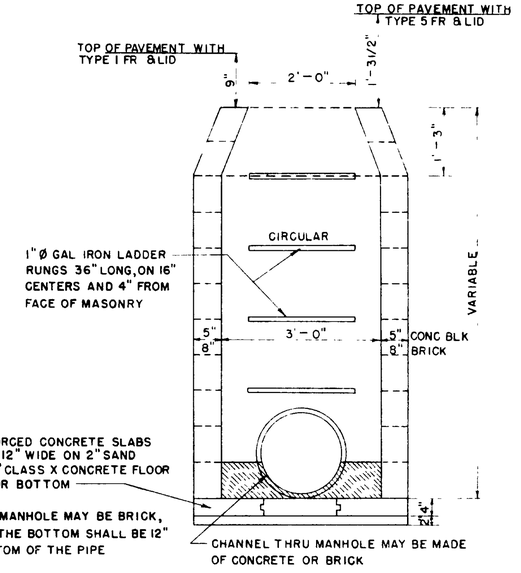

DETAIL OF TYPE 1 OPEN & CLOSED LIDS

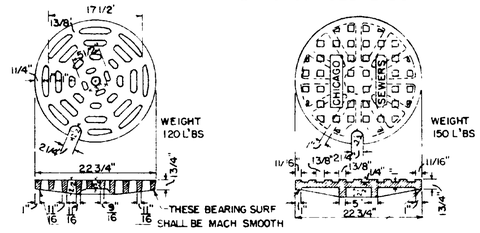

TYPE 1 FRAME

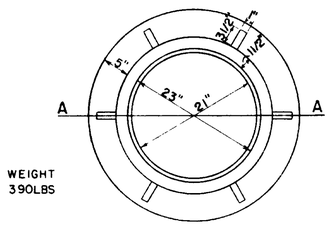

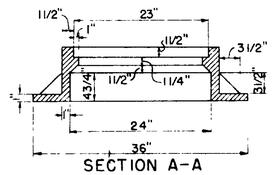

SECTION A-A

THAT PART OF THE FRAME WHICH IS IN CONTACT WITH THE LID WHEN IN PLACE SHALL BE MACHINE FINISHED TO A TRUE AND EVEN SURFACE

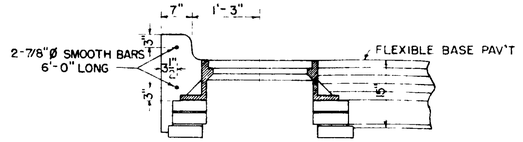

DETAIL OF TYPE 3F CURB & GUTTER & PAVEMENT CONSTRUCTION ADJACENT TO TYPE 1 FRAME

1660820095

USE ONLY FOR FLEXIBLE BASE CONST

3-21-45

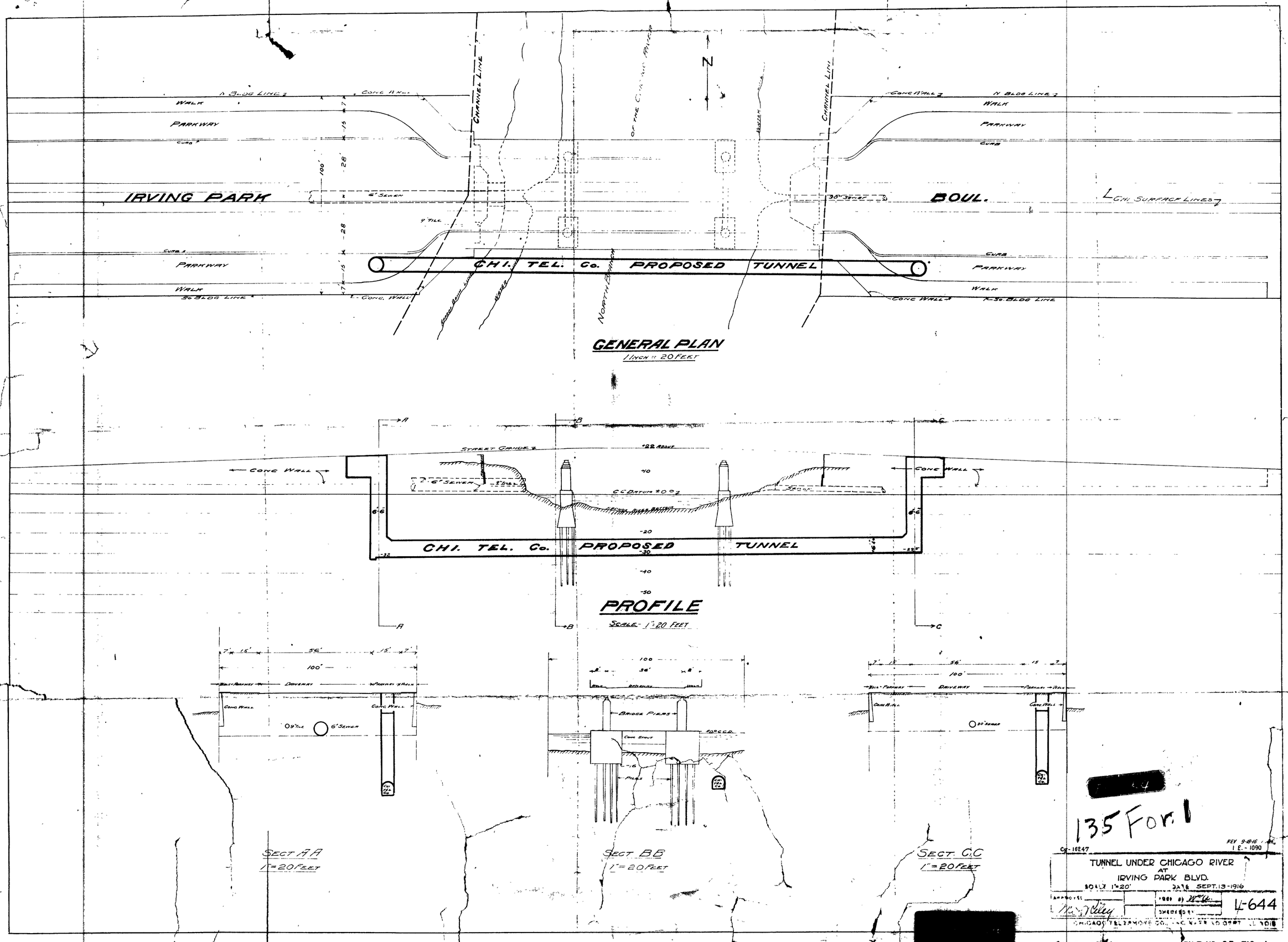

[redacted]

135 For. 1

Cg-16247

REV 9-18-16 I.E.-1090

TUNNEL UNDER CHICAGO RIVER
AT
IRVING PARK BLVD.

SCALE 1" = 20' DATE SEPT. 13-1916

APPROVED M. J. Riley

DRAWN BY W. C.

CHECKED BY

L-644

CHICAGO TELEPHONE CO. ENGINEERING DEPT. ILL. 1918

[redacted]

DRWG. 46643

FILE NO. 25-E10-1

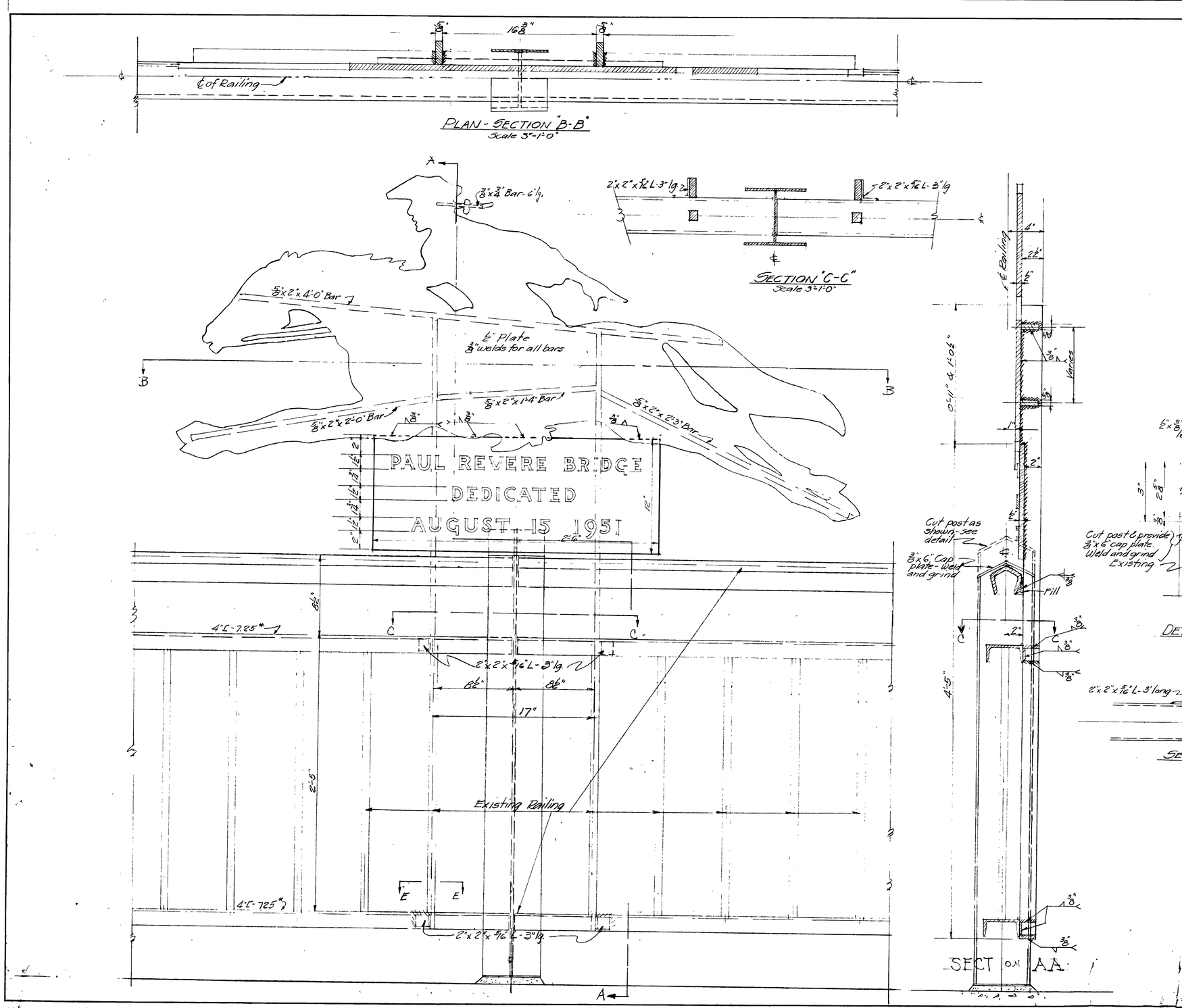

NOTES:-

Horse and rider same as template provided by City, except riders foot which is shortened to clear name plate.

All visible welds on front shall be ground.

Letters on name plate shall be made of stainless steel, fastened by means of machine screws thru back, and heads of screws spot welded in place.

Surface forming background of name plate shall be machine hammered. Submit sample for approval.

New work shall receive one shop coat of white lead. Part of work above railing shall be painted with two coats of black paint except surfaces of letters. Work below top of railing shall be painted with two coats of aluminum paint.

REVISIONS

CITY OF CHICAGO
DEPARTMENT OF PUBLIC WORKS
BUREAU OF ENGINEERING
DIVISION OF BRIDGES & VIADUCTS

PAUL REVERE BRIDGE
DETAILS of NAME PLATE

DRAWN	TRACED	CHECKED	IN CHARGE	DATE	SCALE
HC			GSH	4/24/57	3" & 6" = 1'-0"

CORRECT — ASST. BRIDGE ENGINEER (DESIGN)
APPROVED — ASST. CITY BRIDGE & VIADUCT ENGR.
APPROVED — CITY BRIDGE & VIADUCT ENGINEER
APPROVED — CITY ENGINEER

DRWG. NO. 46444
FILE NO 11-E10-2

1660820097

IRV.-15

Irving Pk. Bridge

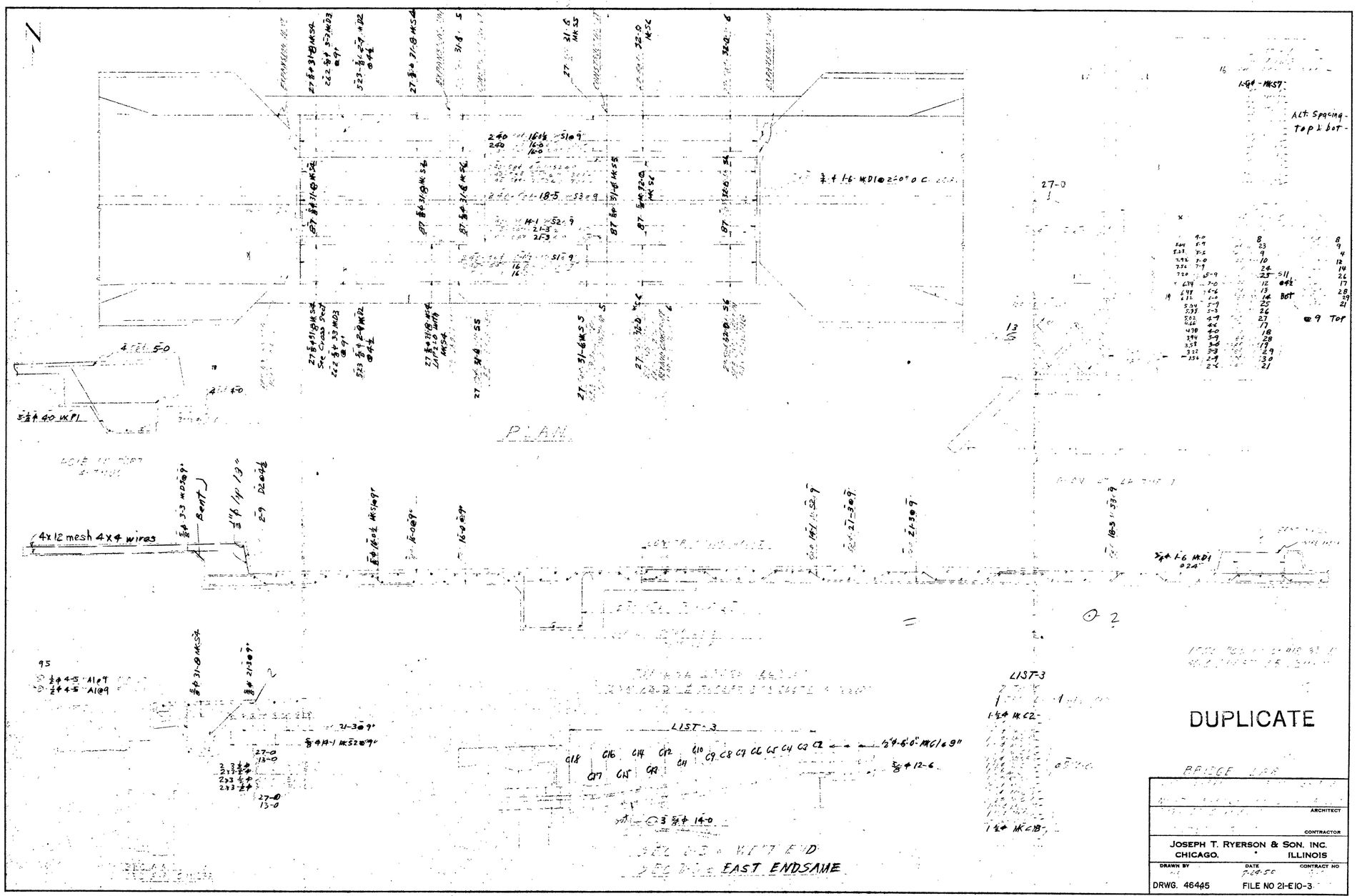
PLAN
4x12 mesh 4x4 wires
LIST-3
EAST ENDSAME
Alt. Spacing - Top & bot -
DUPLICATE
ARCHITECT
CONTRACTOR
JOSEPH T. RYERSON & SON, INC.
CHICAGO, ILLINOIS
DRAWN BY
DATE
CONTRACT NO
DRWG. 46445
FILE NO 21-E10-3
1660820098
IRV-13
TURNBAUER

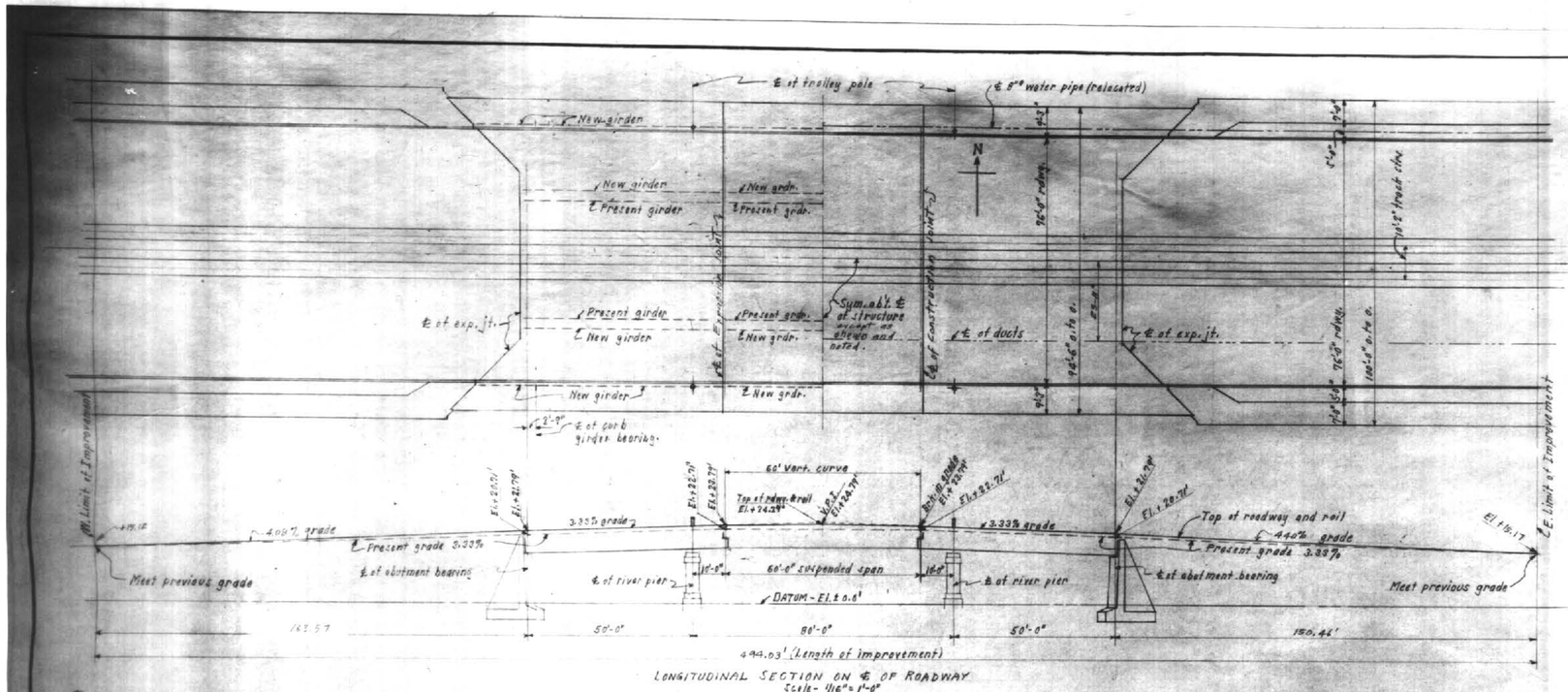

LONGITUDINAL SECTION ON ℄ OF ROADWAY
Scale - 1/16" = 1'-0"

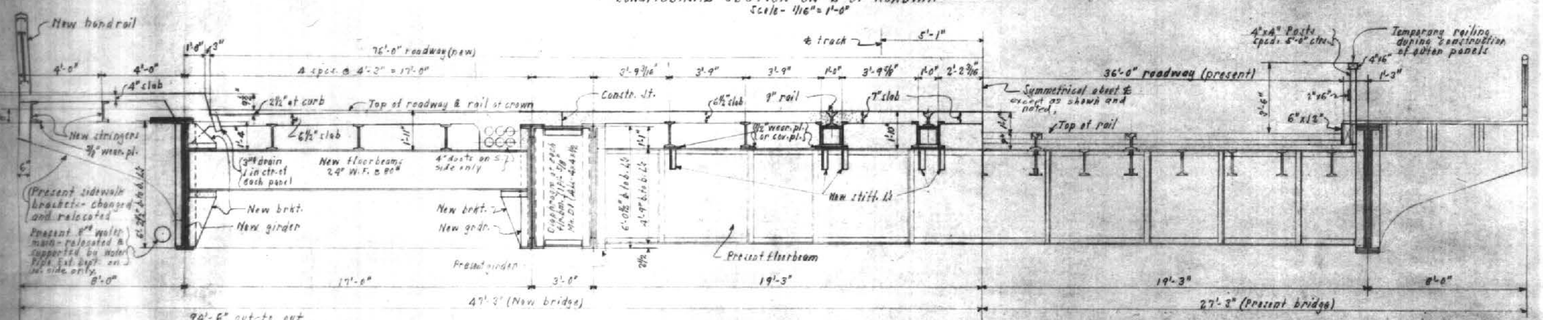

HALF SECTION - PROPOSED BRIDGE - END SPAN
Scale - 3/8" = 1'-0"

NOTE - Rail & sidewalk stringers are new - Present sidewalk stringers and sidewalk brackets shall be used and relocated when found to be in good condition.

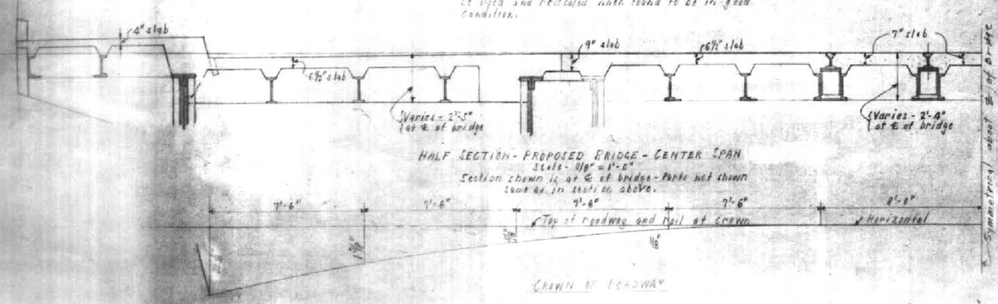

HALF SECTION - PROPOSED BRIDGE - CENTER SPAN
Scale - 1/8" = 1'-0"
Section shown is at ℄ of bridge - Parts not shown same as in that at above.

CROWN OF ROADWAY

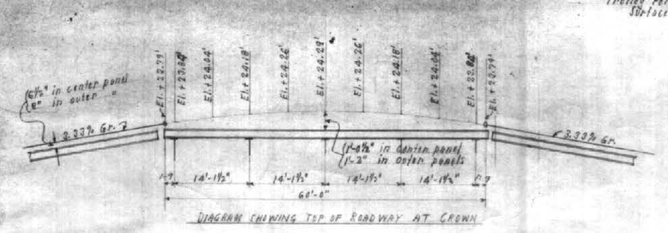

DIAGRAM SHOWING TOP OF ROADWAY AT CROWN

CONDITIONS OF LOADING

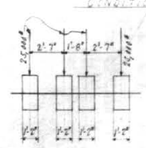

50 TON TRAILER TRUCK
One line of wheels as shown.
No impact.
Trailer passage is to be confined to center 20 ft. section of bridge. No other L.L. shall be on the center section of the structure during passage of this load, and allowable stresses may be increased 25%.

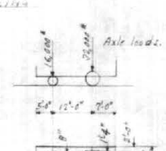

24 TON TRUCK

UNIFORM LIVE LOADS
Roadway - 125# per Sq. ft.
Sidewalk - 100# " " "

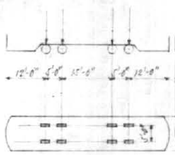

50 TON STREET CAR

APPLICATION OF LOADS
All members of structure are designed for two lines of loading with on each side of the ℄ of structure, placed in their proper traffic direction, and with the remaining contributing area covered with the specified uniform loads. Or the special 50 ton trailer truck could be used in the design, under conditions as noted above.
One loading unit consists of one 24 ton truck or one continuous line of 50 ton street cars. Both may be placed adjacent or in line.
Impacts used are based on the following formula.

$$I = \frac{A}{m+2}\left(\frac{L+250}{2L+500}\right)$$

where m = coefficient based on loaded width
L = length of structure loaded (longitudinal)
Dead Loads - Concrete slabs on roadway and sidewalk 92 #/cu.ft.

NOTES
Maintenance of Traffic.
1. Remove one sidewalk and brackets, build temporary railing on roadway and place new girders, floorbeams, stringers and diaphragms outside of this. Relocate present sidewalk brackets on to all such new brackets as may be necessary, place new sidewalk stringers and handrail, and pour roadway and sidewalk concrete slabs.
2. Follow same procedure with other side.
3. One street car track will be placed on each new side of structure and traffic directed to same.
4. Remove present roadway deck and rebuild.

Present Material.
Present floorbeams at abutments to be replaced. Other present floorbeams to be reinforced as shown and to remain in place.
Present girders to remain in place - brackets to be removed and new diaphragms added.
Present sidewalk brackets and roadway stringers shall be re-used when found to be in good condition and subject to the discretion of the Commissioner of Public Works. Present rail stringers shall be salvaged.
Alterations and changes must, of course, match present steel details. For this purpose, prints of the design and shop drawings of the present structure are available to the contractors.
Ducts: - All terminal ducts and fittings, and all expansion and construction joint material pertaining to ducts, to be furnished by the Commonwealth Edison Co.
Water Pipe - Present 8" water pipe to be relocated and supported by the Water Pipe Ext. Dept. of the City.
Trolley Pole - Base castings and poles to be furnished by the Chicago Surface Lines. Base Casting to be set by contractor.

REVISIONS

CITY OF CHICAGO
DEPARTMENT OF PUBLIC WORKS
BUREAU OF ENGINEERING
DIVISION OF BRIDGES

WORK CLASSIFICATION 3430

JOB	W. IRVING PK. RD. FIXED BR.
TITLE	GENERAL PLAN AND CROSS SECTIONS
SCALE	AS SHOWN
DRAWN BY	JC
TRACED BY	
NO.	DATE
DRAWING NO.	125A-FER 400
FILE NO.	

CORRECT _____ BRIDGE DESIGNING ENGINEER
APPROVED _____ ENGINEER OF BRIDGE DESIGN
APPROVED _____ DIVISION OF BRIDGES

1660820099

DRWG. 46446

FILE NO. 25-E10-4

CITY OF CHICAGO

JANE M. BYRNE
MAYOR

DEPARTMENT OF PUBLIC WORKS
BUREAU OF ENGINEERING

JEROME R. BUTLER, Commissioner
LOUIS KONCZA, Chief Engineer

INDEX OF DRAWINGS

DRAWING NO.	SET NO.	TITLE
36050	1 of 8	TITLE SHEET
36051	2 of 8	GENERAL PLAN & ELEVATION
36052	3 of 8	EXPANSION JOINT & DECK PATCHING
36053	4 of 8	GIRDER BEARING REPAIRS
36054	5 of 8	EXPANSION & CONSTRUCTION JOINTS
36055	6 of 8	TRAFFIC CONTROL DEVICES
36056	7 of 8	BARRICADES & TRAFFIC CONTROL DEVICES.
36049	8 of 8	SIDEWALK, PARAPET & RAILING

CITY OF CHICAGO
LOCATION MAP

CONTRACT PLANS

FOR

IRVING PARK ROAD BRIDGE

OVER NORTH BRANCH CHICAGO RIVER

REPAIRS

PASSED April 18 1979
Raymond M. Hayes
DISTRICT ENGINEER OF LOCAL ROADS & STREETS
APPROVED April 18 1979
Sigmund J. Chajowski
DISTRICT ENGINEER
STATE OF ILLINOIS
DEPARTMENT OF TRANSPORTATION

DEPARTMENT OF TRANSPORTATION
FEDERAL HIGHWAY ADMINISTRATION
APPROVED _____
DIVISION ADMINISTRATOR
DATE _____

CITY OF CHICAGO
DEPARTMENT OF PUBLIC WORKS
BUREAU OF ENGINEERING
DATE April 4, 1978
APPROVED Ted Kaczkowski
ASST CHIEF BRIDGE ENGINEER
APPROVED H. Teale
CHIEF BRIDGE ENGINEER
APPROVED Albert Baker
ASST CHIEF ENGINEER
APPROVED Louis Prieser
CHIEF ENGINEER
APPROVED James D. Crutch
COMMISSIONER

SHEET NO. 1 OF 8 SHEETS
DRWG. NO. 36050 FILE NO. 11-A27-92

STATE JOB NO. C-88-013-78
FAUP ROUTE NO. 876
PROJECT NO. F-876(18)
PROJECT NO. E-5-308
SPECIFICATION NO. 80.77-78-10
M.F.T. SECTION: IRVING PARK ROAD 0707.2 C.S.

APPROVED — Frank Chin
PROJECT MANAGER ENGINEER

Issued by
DEPARTMENT OF PURCHASES, CONTRACTS AND SUPPLIES
JAMES P. ARNOLD, Purchasing Agent 1660820100

STATE OF ILLINOIS
HENRY NOVICKAS
CHICAGO
REGISTERED STRUCTURAL ENGINEER
Henry Novickas

REVISED DEC. 1979

⚠ REVISION 8-21-80

ADDED NEW FLANGE ANGLES TO FOUR FLOOR BEAMS.
WEIGHT OF STEEL 8436 LBS.
NUMBER OF 1" ϕ H.S. BOLTS 444 REQUIRED.

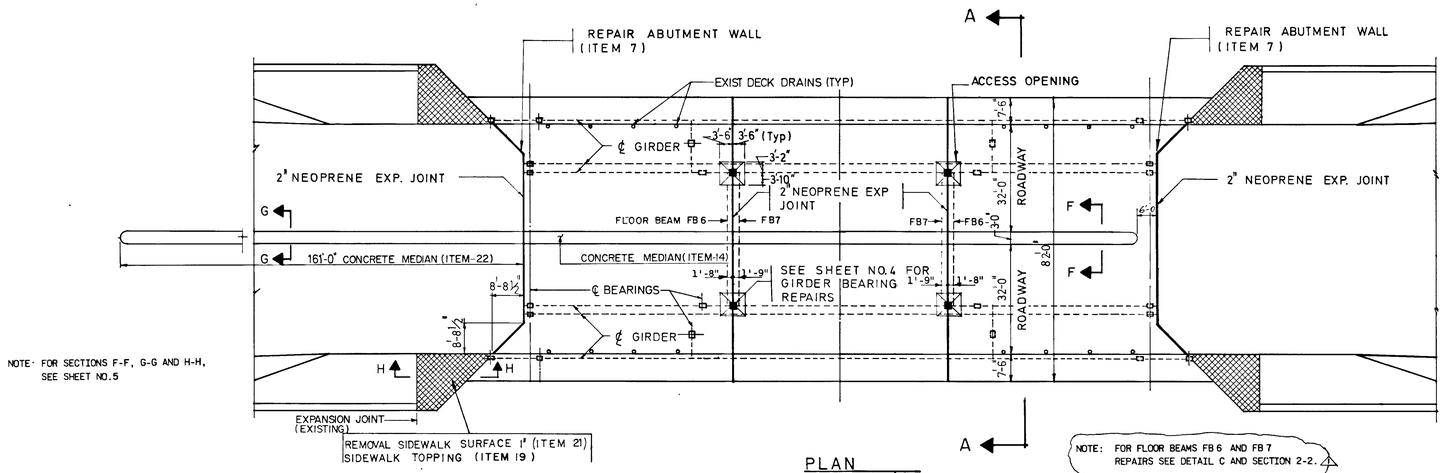

NOTE: FOR SECTIONS F-F, G-G AND H-H, SEE SHEET NO.5

PLAN
SCALE: 1/16" = 1'-0"

NOTE: FOR FLOOR BEAMS FB6 AND FB7 REPAIRS SEE DETAIL C AND SECTION 2-2. ⚠

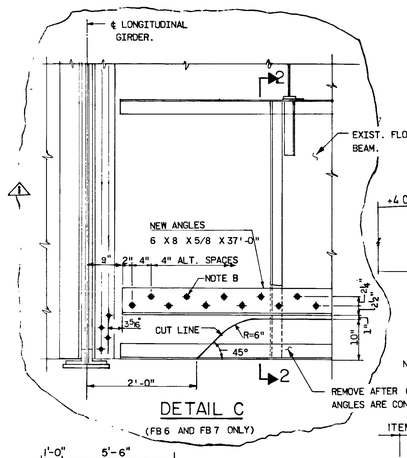

DETAIL C
(FB6 AND FB7 ONLY)

NOTE B: DRILL 13/16" ϕ HOLES IN FIELD FOR 3/4" ϕ H.S. BOLTS.

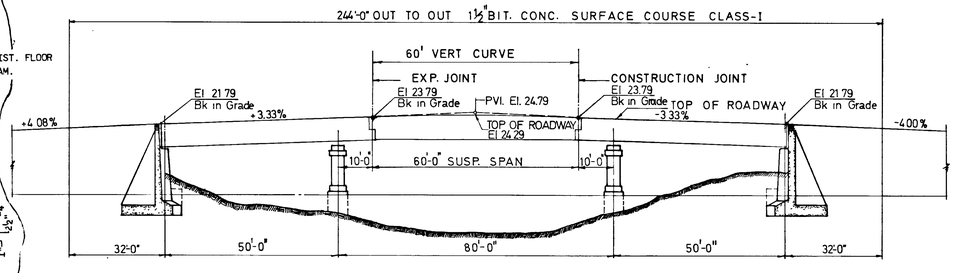

LONGITUDINAL SECTION ON ℄ OF ROADWAY
SCALE: 1/16" 1'-0"

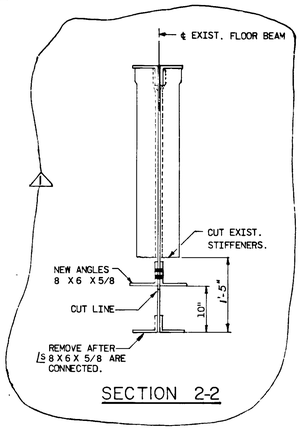

SECTION 2-2

GENERAL NOTES

IT SHALL BE THE RESPONSIBILITY OF THE CONTRACTOR TO VERIFY ALL DIMENSIONS AND CONDITIONS EXISTING IN THE FIELD PRIOR TO CONSTRUCTION AND ORDERING OF MATERIALS.

SPECIAL CARE SHALL BE TAKEN IN COMPACTING BITUMINOUS CONCRETE SURFACE ALONG EXPANSION JOINTS TO ACHIEVE PROPER DENSITY AND TO FORM ¼" LIP. SMALLER ROLLERS AND STEEL PLATES SHALL BE USED FOR THIS PURPOSE AS DIRECTED BY THE COMMISSIONER.

FIELD WELDING OF CONSTRUCTION ACCESSORIES WILL NOT BE PERMITTED TO THE BOTTOM FLANGE OF BEAMS OR GIRDERS NOR TO THE TOP FLANGE FOR A DISTANCE EQUAL TO ONE FOURTH THE SPAN LENGTH EACH WAY FROM THE PIER SUPPORTS. FIELD WELDING IN OTHER AREAS WILL BE PERMITTED ONLY WHEN APPROVED BY THE COMMISSIONER.

REMOVE PRESENT BITUMINOUS CONCRETE SURFACE ON BRIDGE ROADWAY TO EXPOSE P.C. CONCRETE DECK SLAB.

ALL WELDING SHALL CONFORM TO THE CURRENT SPECIFICATIONS FOR WELDED HIGHWAY AND RAILWAY BRIDGES OF THE AMERICAN WELDING SOCIETY.

ALTERATIONS AND CHANGES MUST MATCH PRESENT STEEL DETAILS. FOR THIS PURPOSE PRINTS OF THE DESIGN AND SHOP DRAWINGS OF THE PRESENT STRUCTURE ARE AVAILABLE TO THE CONTRACTOR AT THE OFFICE OF BUREAU OF ENGINEERING

BILL OF MATERIAL

ITEM NO	ITEM	UNIT	SUPER	SUB	TOTAL
1	REMOVAL & DISPOSAL OF DETERIORATED BRGS	L SUM	1	—	1
2	FURNISHING & ERECTING STRUCTURAL STEEL	POUND	5500	—	5500
3	NEOPRENE EXPANSION JOINT	LIN FT	328	—	328
4	REINFORCEMENT BARS	POUND	10,090	—	10,090
5	DECK SLAB REPAIR (PARTIAL)	SQ YDS.	66	—	66
6	DECK SLAB REPAIR (FULL DEPTH)	SQ YDS.	46	—	46
7	REPAIR CONCRETE STRUCTURES	SQ FT	—	50	—
8	BRIDGE DECK SURFACE PREPARATION	SQ YDS.	1714	—	1714
9	WATERPROOFING MEMBRANE SYSTEM	SQ YDS.	1307	—	1307
10	BIT. CONC SURFACE COURSE MIXTURE D CLASS I	TON	145	—	145
11	FIELD PAINTING	L SUM	1	—	1
14	CLASS X CONCRETE	CU YDS.	104.4	—	104.4
15	REINFORCEMENT BARS (EPOXY COATED)	POUND	12,630	—	12,630
16	EXPANSION BOLTS 3¼ ϕ	EA	776	—	776
17	CONCRETE REMOVAL	CU YDS.	41.7	—	41.7
18	FURNISHING & ERECTING STEEL RAILING	LIN FT	494	—	494
19	SIDEWALK TOPPING	SQ FT	682	—	682
20	PROTECTIVE COAT	SQ YDS.	600	—	600
21	REMOVAL SIDEWALK SURFACE 1"	SQ YDS.	682	—	682
22	CONCRETE MEDIAN	SQ FT	644	—	644
23	TRAINEES	HOUR	—	—	1000

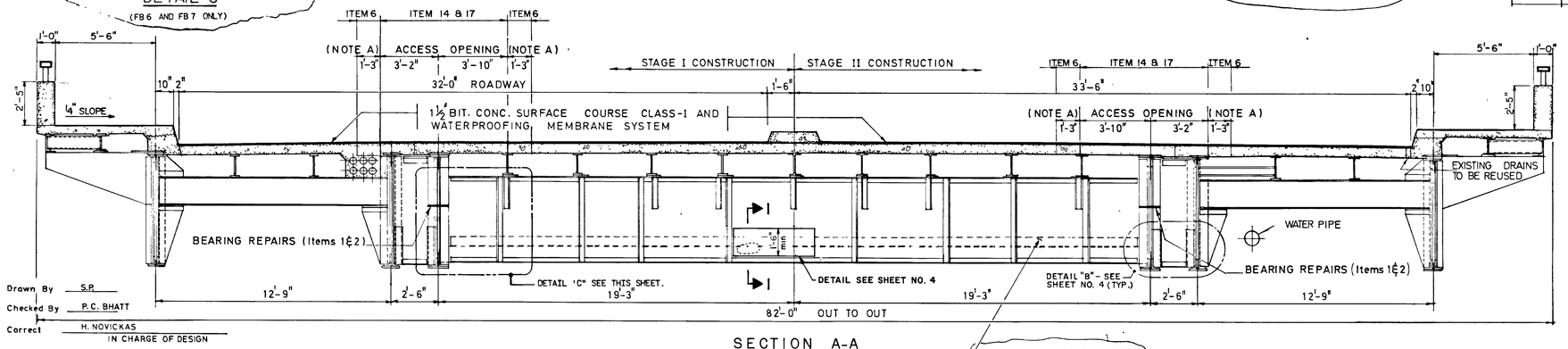

SECTION A-A
SCALE: 3/8" = 1'-0"

2 Ls 6X8X5/8 X 37'-0" FOR FLOOR BEAMS FB6 & FB7 ONLY FOR LOCATION SEE PLAN. ⚠

NOTE A

REMOVE 1'-3" OF CONCRETE ON ALL FOUR (4) SIDES EXPOSE EXISTING REINFORCEMENT AND SPLICE NEW #5 REINFORCEMENT BARS CUT AND FIT BARS IN FIELD, ITEM 6 AND 4

DESIGN SPECIFICATIONS. 1977 AASHTO. 1978 & 1979 INTERIMS
DESIGN LOADING: HS 20 - 44.

CITY OF CHICAGO
DEPARTMENT OF PUBLIC WORKS
BUREAU OF ENGINEERING

IRVING PARK ROAD BRIDGE
OVER NORTH BRANCH CHICAGO RIVER
REPAIRS

GENERAL PLAN AND ELEVATION

Drawn By S.P.
Checked By P.C. BHATT
Correct H. NOVICKAS
IN CHARGE OF DESIGN

Approved Frank Chan
COORDINATOR

MURPHY ENGINEERING, INC.
Contract No. 40082

SCALE: AS NOTED	DRWG. NO. 36051
SHEET NO. 2 OF 8 SHEETS	FILE NO. 11-A27-93

1660820101

REVISED DEC. 1979

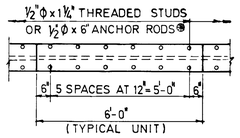

PLAN — TRANSFLEX MODEL 200A
(STRUCTURAL RUBBER PRODUCTS CO.)

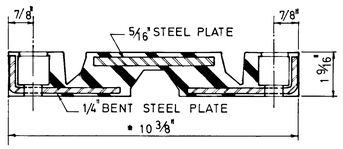

* DIMENSION AT 50°F

CROSS SECTION
DIMENSIONS ARE AT RIGHT ANGLES

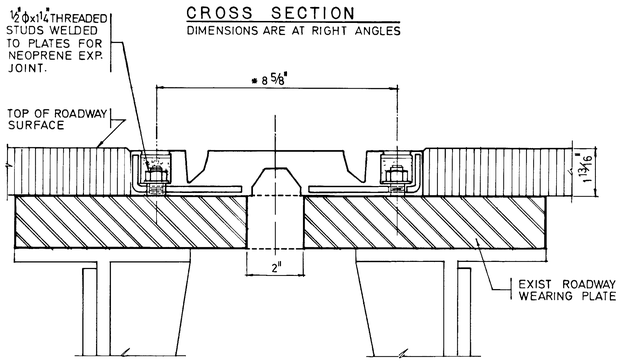

EXPANSION JOINT

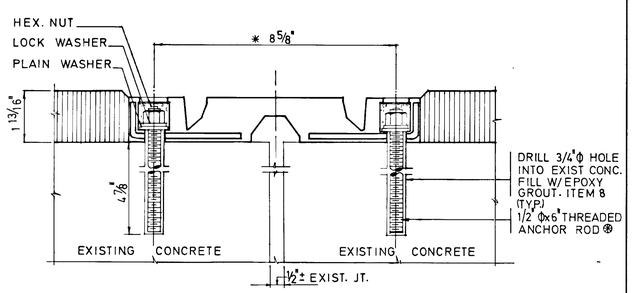

CONSTRUCTION JOINT

Drawn By S.P.
Checked By P. C. BHATT
Correct H. NOVICKAS
IN CHARGE OF DESIGN

Approved Frank Chen
COORDINATOR

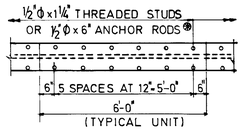

PLAN — WABOFLEX MODEL SR2
(WATSON BOWMAN ASSOCIATES INC.)

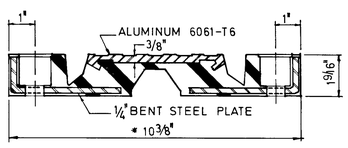

* DIMENSIONS AT 50° F.

CROSS SECTION
DIMENSIONS ARE AT RIGHT ANGLES

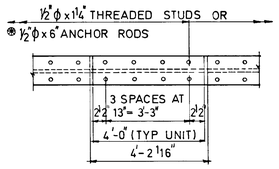

PLAN — FEL-SPAN MODEL T-30
(FELD-PRO BUILDING PRODUCTS INC.)

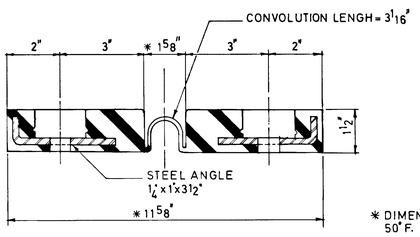

* DIMENSIONS AT 50° F.

CROSS SECTION
DIMENSIONS ARE AT RIGHT ANGLES

⊛ NOTE ½"Φx4" THREADED ANCHOR RODS SHALL BE USED IN THE SIDEWALK JOINT.

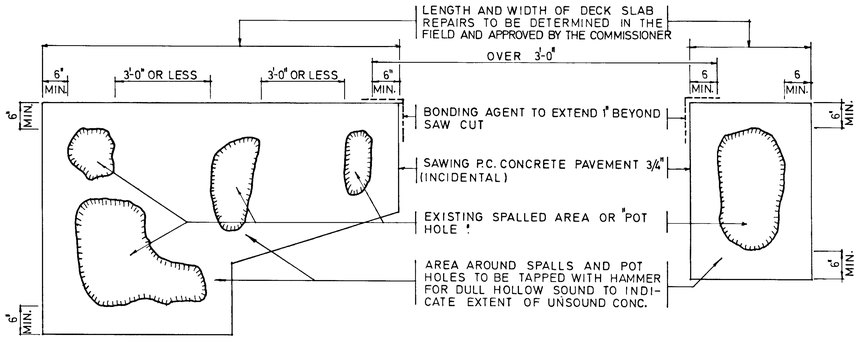

MULTIPLE POT HOLES — PLAN — ISOLATED POT HOLES

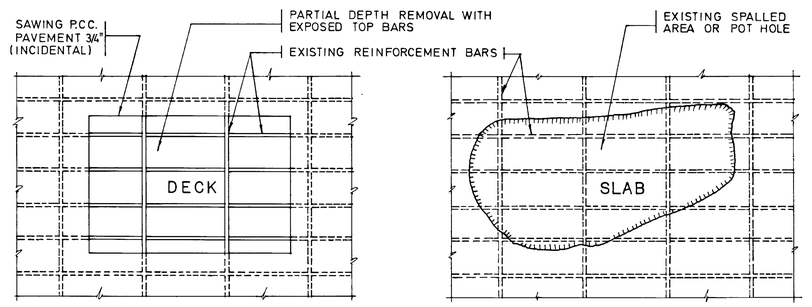

PLAN OF DECK PATCHING

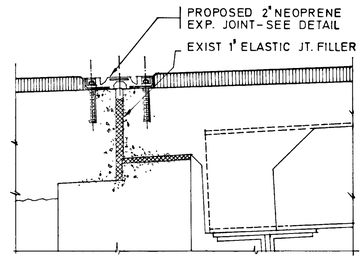

EXPANSION JOINT AT ABUTMENTS

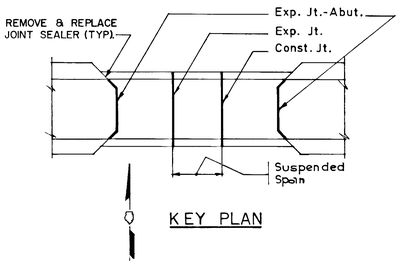

KEY PLAN

CITY OF CHICAGO
DEPARTMENT OF PUBLIC WORKS
BUREAU OF ENGINEERING

IRVING PARK ROAD BRIDGE OVER NORTH BRANCH CHICAGO RIVER REPAIRS

EXPANSION JOINT AND DECK PATCHING

MURPHY ENGINEERING, INC.
Contract No. 40082

SCALE:	DRWG. NO. 36052
SHEET NO. 3 OF 8 SHEETS	FILE NO. 11-A27-94

1660820102

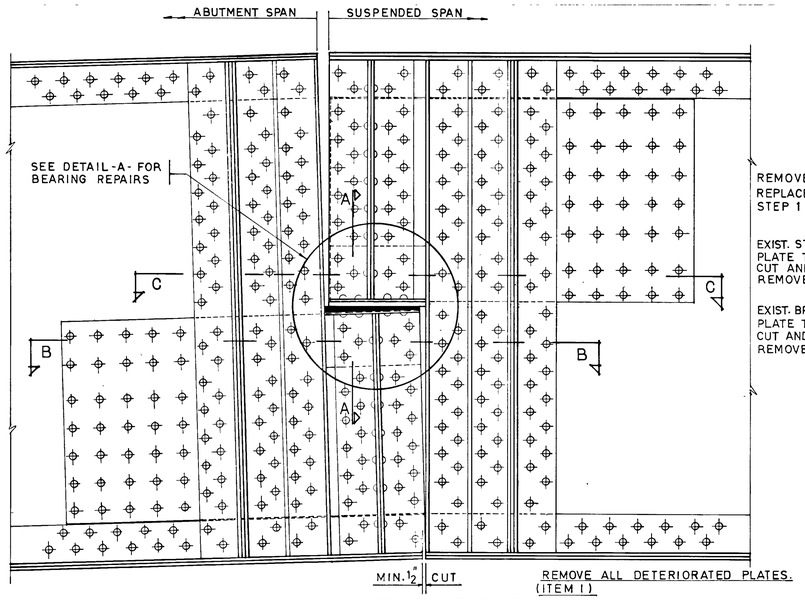

EXISTING ELEVATION
SCALE : 1 1/2"=1'-0"

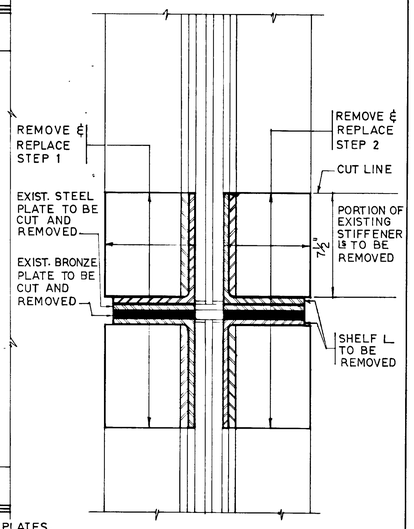

SECTION A-A
SCALE : 3"=1'-0" (EXISTING)

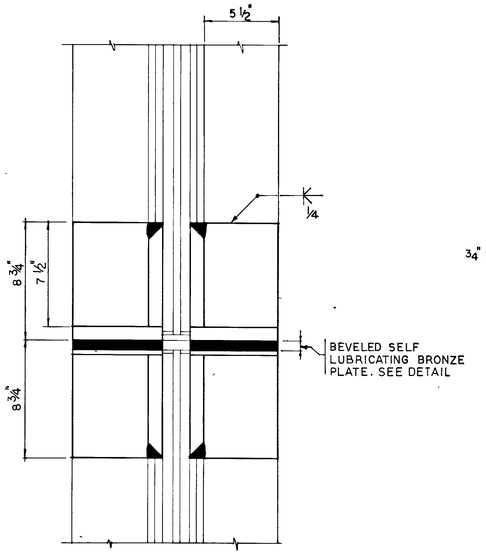

SECTION A-A
SCALE: 3"=1'-0" (PROPOSED)

NOTE: THE CONTRACTOR WILL ERECT SCAFFOLDING PRIOR TO ORDERING OF MATERIALS FOR STEEL REPAIRS TO PERMIT A THOROUGH INSPECTION OF ALL STEEL MEMBERS BY THE COMMISSIONER. COST INCIDENTAL TO ITEM 2, FURNISHING AND ERECTING STRUCTURAL STEEL.

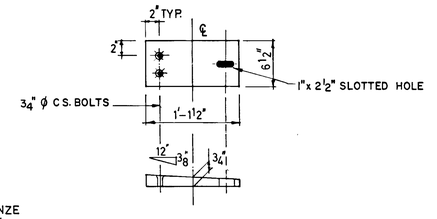

BRONZE PLATE DETAIL – 8 REQ'D.
SCALE: 1 1/2"=1'-0" (ITEM 2)

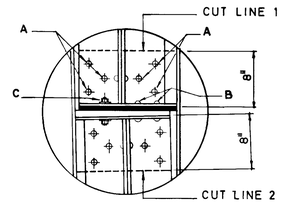

DETAIL-A_EXISTING CONDITION
SCALE: 1 1/2"=1'-0"

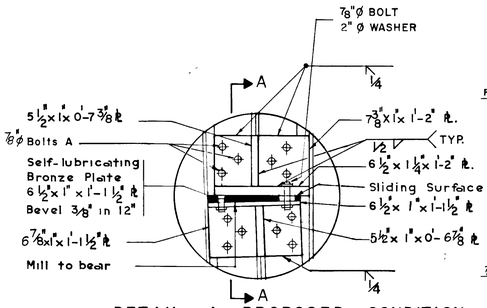

DETAIL – A – PROPOSED CONDITION
SCALE: 1 1/2"=1'-0"

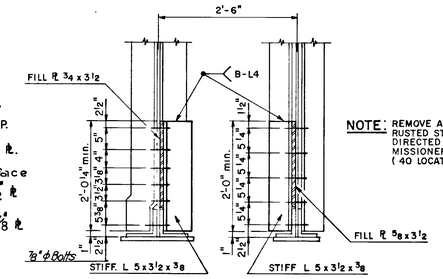

NOTE: REMOVE AND REPLACE RUSTED STIFFENERS AS DIRECTED BY THE COMMISSIONER. (40 LOCATIONS)

DETAIL "B"
SCALE: 1"=1'-0"

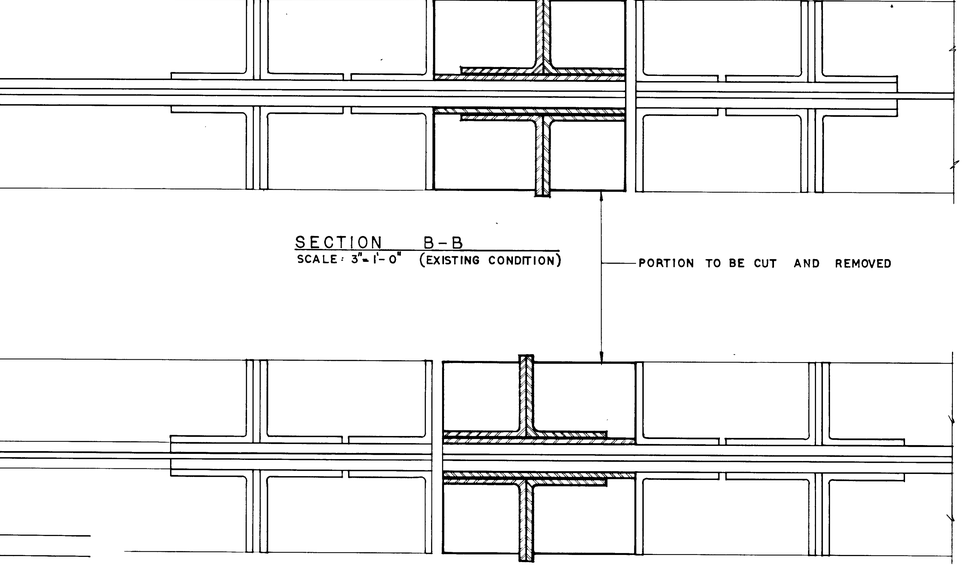

SECTION B-B
SCALE: 3"=1'-0" (EXISTING CONDITION)

SECTION C-C
SCALE: 3"=1'-0" (EXISTING CONDITION)

NOTE:
REMOVE ALL SCALE AND RUST FROM EXISTING STEEL MEMBERS BEFORE INSTALLING WEB REINF. PLATES.
(35 LOCATIONS AS DIRECTED BY THE COMMISSIONER.)

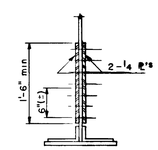

SECTION 1-1
SCALE: 1"=1'-0"

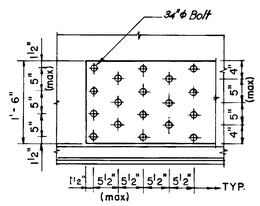

Drawn By S.R
Checked By P.C. BHATT
Correct H. NOVICKAS
IN CHARGE OF DESIGN

Approved Frank Chin
COORDINATOR

CITY OF CHICAGO
DEPARTMENT OF PUBLIC WORKS
BUREAU OF ENGINEERING

IRVING PARK ROAD BRIDGE OVER NORTH BRANCH CHICAGO RIVER REPAIRS

GIRDER BEARING REPAIRS

MURPHY ENGINEERING, INC.
Contract No. 40082

SCALE: AS NOTED	DRWG. NO. 36053
SHEET NO. 4 OF 8 SHEETS	FILE NO. 11-A27-95

1660820103

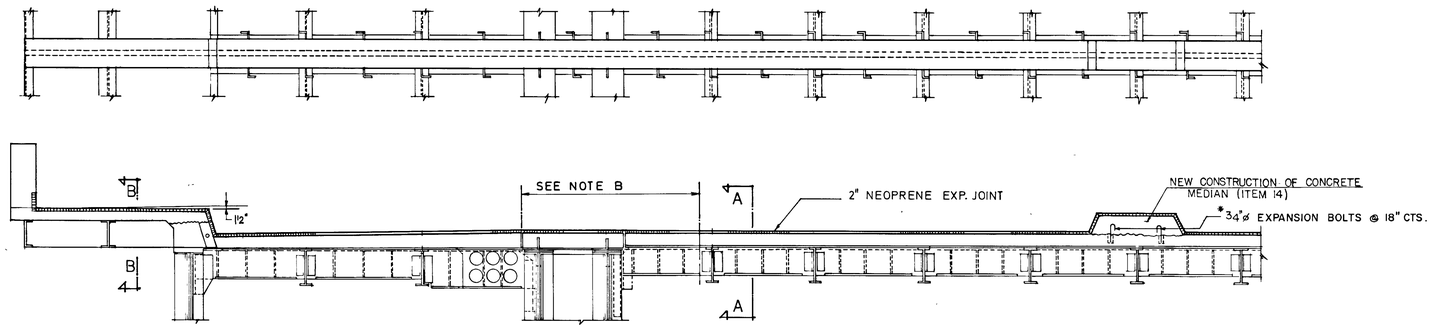

SIDEWALK AND ROADWAY CONSTRUCTION JOINT
SCALE: ½"=1'-0" (EAST END OF SUSPENDED SPAN)

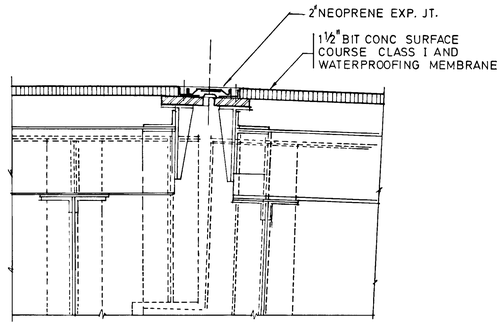

SECTION E-E
SCALE: 1"=1'-0"

NOTE B

REMOVE PORTIONS OF EXPANSION DEVICE & BRACING WITHIN THE ACCESS OPENING. AFTER COMPLETION OF REPAIRS REPLACE ALL REMOVED STEEL. USE ⅞" ϕ H.S. BOLTS IN LIEU OF RIVETS. BUTT WELD ALL CUT MEMBERS. COST INCIDENTAL TO ITEM-2

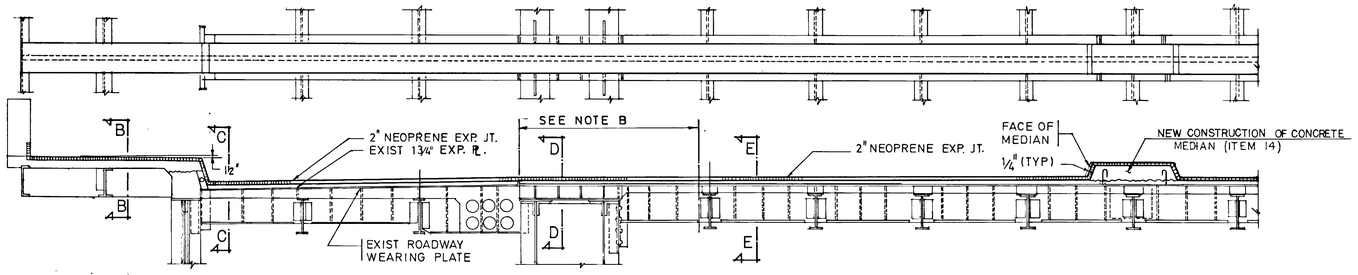

SIDEWALK AND ROADWAY EXPANSION JOINT
SCALE: ½"=1'-0" (WEST END OF SUSPENDED SPAN)

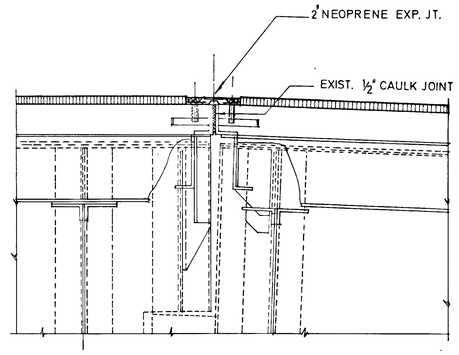

SECTION A-A
SCALE: 1"=1'-0"

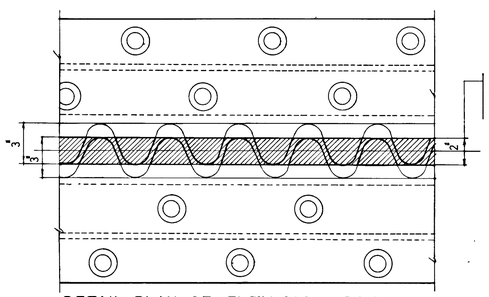

DETAIL PLAN OF EXPANSION DEVICE

* FOR SCHEDULE & BILL OF MATERIALS FOR BARS b6, c4 & EXPANSION BOLTS SEE SHEET NO 8.

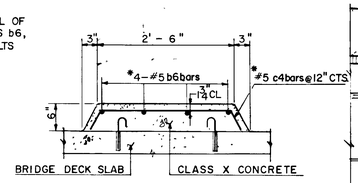

SECTION F-F
SCALE: 1"=1'-0"

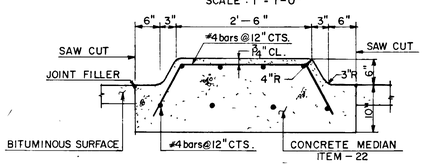

SECTION G-G
SCALE: 1"=1'-0"

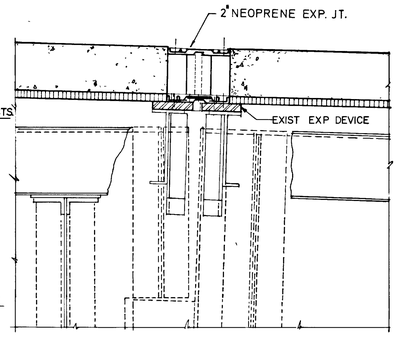

SECTION C-C
SCALE: 1"=1'-0"

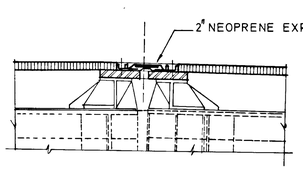

SECTION D-D
SCALE: 1"=1'-0"

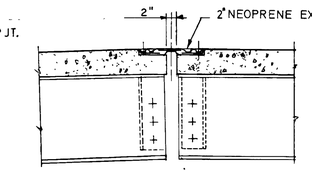

SECTION B-B
SCALE: 1½"=1'-0"

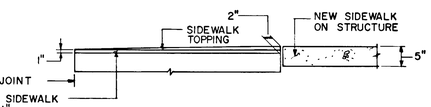

SECTION H-H

CITY OF CHICAGO
DEPARTMENT OF PUBLIC WORKS
BUREAU OF ENGINEERING

IRVING PARK ROAD BRIDGE OVER NORTH BRANCH CHICAGO RIVER REPAIRS

EXPANSION AND CONSTRUCTION JOINTS

Drawn By S.P.
Checked By P.C. BHATT
Correct H. NOVICKAS
IN CHARGE OF DESIGN

Approved Frank Che
COORDINATOR

MURPHY ENGINEERING, INC.
Contract No. 40082

SCALE: AS NOTED	DRWG. NO. 36054
SHEET NO. 5 OF 8 SHEETS	FILE NO. 11-A27-96

1660820104

REVISIONS

STANDARD DESIGN
TYPICAL APPLICATION OF TRAFFIC CONTROL DEVICES FOR HIGHWAY CONSTRUCTION AND MAINTENANCE

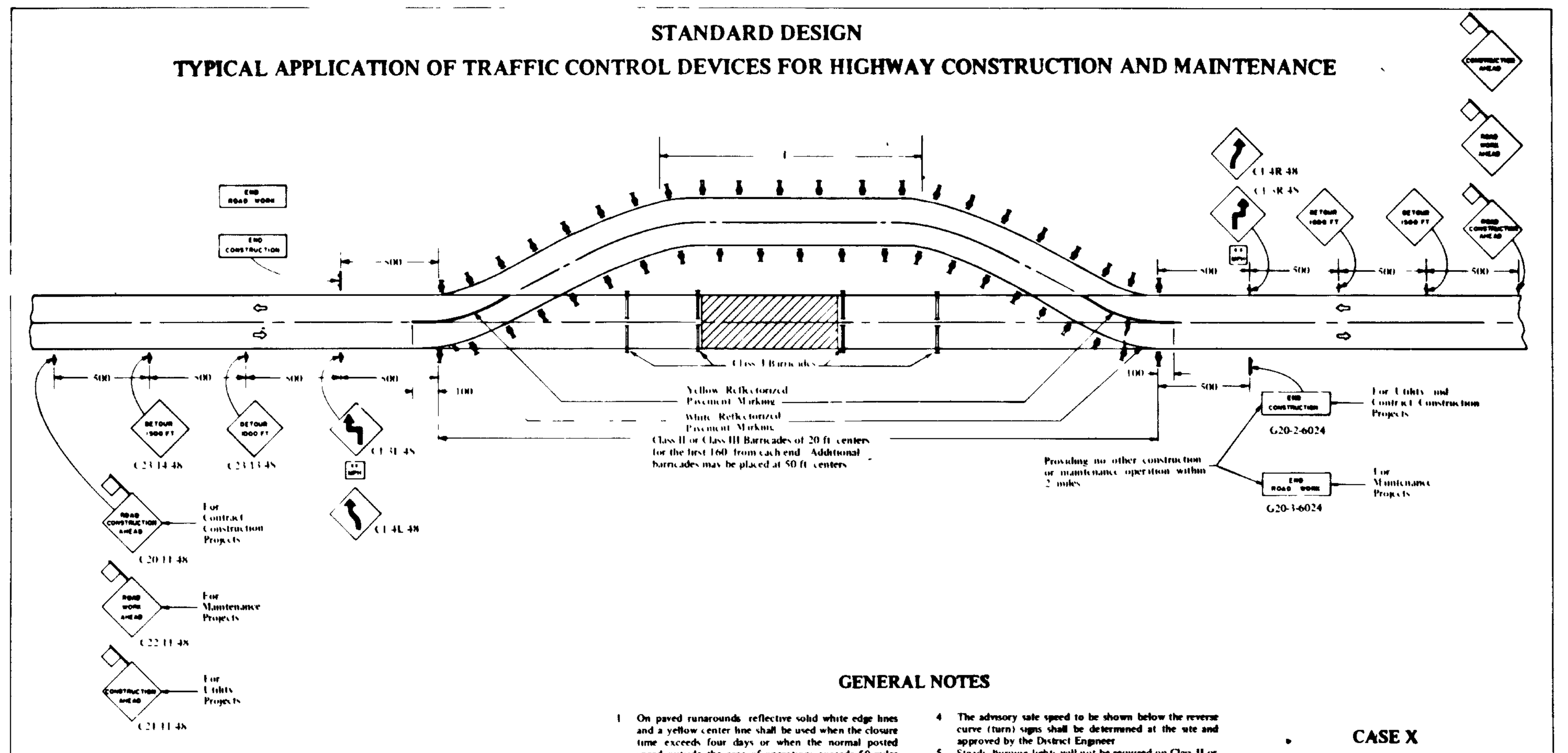

GENERAL NOTES

1. On paved runarounds reflective solid white edge lines and a yellow center line shall be used when the closure time exceeds four days or when the normal posted speed outside the area of operations exceeds 50 miles per hour In all cases temporary reflectorized pavement marking tape shall be used for marking a new center line and edge lines on the existing pavement All existing markings which conflict with the revised traffic pattern will be covered with black nonreflectorized pavement marking tape or painted out On the paved runarounds either temporary reflectorized pavement marking tape or reflectorized painted pavement marking shall be used
2. Where the tangent distance (T) on the temporary runaround exceeds 600 ft amber delineators at 50 foot centers may be substituted for the Class II or Class III Barricades or spacing between barricades may be increased to 100 ft within the limits of the tangent. Within these same limits the yellow reflectorized marking used to indicate the center line of the traveled way may be replaced with white reflectorized marking in a dashed pattern if no passing sight distance restriction exists
3. A curve sign will be required at exit end of the runarounds if (T) is equal to or greater than 1 000 feet
4. The advisory safe speed to be shown below the reverse curve (turn) signs shall be determined at the site and approved by the District Engineer
5. Steady burning lights will not be required on Class II or Class III Barricades for day operations
6. The District Engineer may require steel drums either 55 gallon or 30 gallon to be used to supplement the barricades if the closure time exceeds four days
7. All signs shall be post mounted if the closure time exceeds four days
8. High intensity flashing lights shall be used on each approach in advance of the work area and installed above the first two signs in each series
9. When a side road intersects the highway on which work is being performed additional traffic control devices shall be erected and flagmen provided as directed by the District Engineer
10. Longitudinal dimensions may be adjusted slightly to fit field conditions
11. All warning signs shall have minimum dimensions of 48 in by 48 in and have black legend and border on an orange reflectorized background All signs other than warning signs shall have as a minimum the dimensions shown and shall have a black legend and border on a white reflectorized background
12. Form BT 725 is required

TYPICAL APPLICATIONS

Bridge Construction
Culvert Construction

SYMBOLS

- Work Area
- Sign with 18 in by 18 in (minimum) red flag attached
- Sign on portable or permanent support
- Class II or Class III Barricade with steady burning light

STATE OF ILLINOIS DEPARTMENT OF PUBLIC WORKS & BUILDINGS DIVISION OF HIGHWAYS	REVISED	
APPROVED April 3, 1969	BY	DATE
W. A. Frick, Engineer of Traffic	DAB	12 8 69
	DAB	7-1-71

CASE X

TWO-LANE, TWO WAY TRAFFIC, RURAL TEMPORARY RUNAROUND DAY OR NIGHT OPERATIONS

Where, at any time, any vehicle, equipment, men or their activities require the closure of both lanes and a temporary runaround is constructed.

STANDARD 2310-2

F-615 a

STANDARD DESIGN
TYPICAL APPLICATION OF TRAFFIC CONTROL DEVICES FOR HIGHWAY CONSTRUCTION AND MAINTENANCE

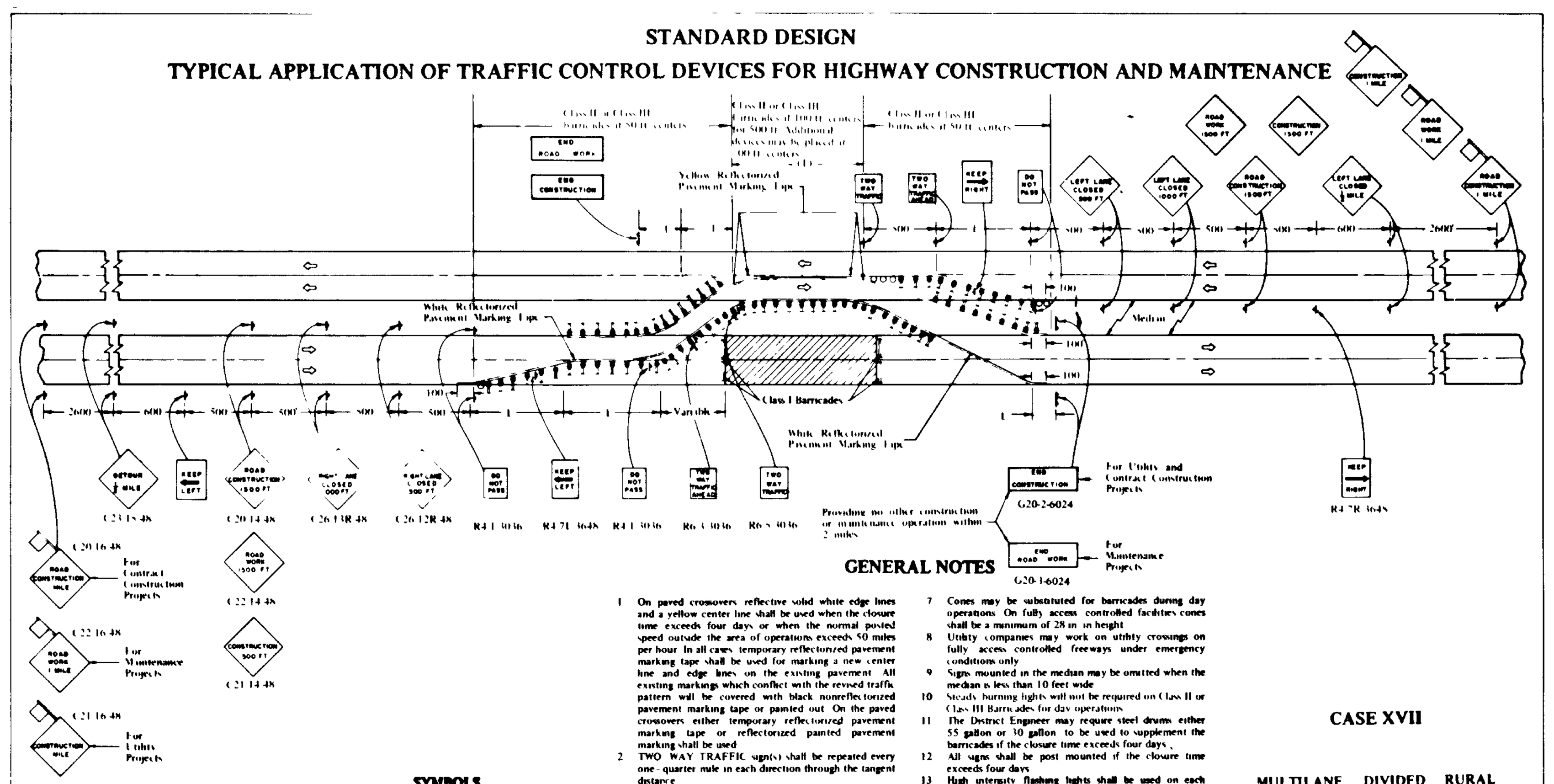

GENERAL NOTES

1. On paved crossovers reflective solid white edge lines and a yellow center line shall be used when the closure time exceeds four days or when the normal posted speed outside the area of operations exceeds 50 miles per hour In all cases temporary reflectorized pavement marking tape shall be used for marking a new center line and edge lines on the existing pavement All existing markings which conflict with the revised traffic pattern will be covered with black nonreflectorized pavement marking tape or painted out On the paved crossovers either temporary reflectorized pavement marking tape or reflectorized painted pavement marking shall be used
2. TWO WAY TRAFFIC sign(s) shall be repeated every one-quarter mile in each direction through the tangent distance
3. Where the tangent distance (T) on the temporary runaround exceeds 600 ft amber delineators at 100 foot centers may be substituted for the Class II or Class III Barricades or spacing between barricades may be increased to 200 ft within the limits of the tangent When (T) is greater than 500 feet 4 foot lengths of double yellow reflectorized pavement marking tape at 50-foot centers may be used
4. A curve sign will be required at the exit end of the runarounds if (T) is equal to or greater than 1 000 feet
5. The "L" distance equals the lane width times the taper ratio

Normal Posted Speed m p h	Taper Ratio ft /ft
70	100/1
65	90/1
60	80/1
55	70/1
50	60/1
45 or less	50/1

7. Cones may be substituted for barricades during day operations On fully access controlled facilities cones shall be a minimum of 28 in in height
8. Utility companies may work on utility crossings on fully access controlled freeways under emergency conditions only
9. Signs mounted in the median may be omitted when the median is less than 10 feet wide
10. Steady burning lights will not be required on Class II or Class III Barricades for day operations
11. The District Engineer may require steel drums either 55 gallon or 30 gallon to be used to supplement the barricades if the closure time exceeds four days
12. All signs shall be post mounted if the closure time exceeds four days
13. High intensity flashing lights shall be used on each approach in advance of the work area and installed above the first two signs in each series
14. When a side road intersects the highway on which work is being performed additional traffic control devices shall be erected and flagmen provided as directed by the District Engineer
15. Longitudinal dimensions may be adjusted slightly to fit field conditions
16. All warning signs shall have minimum dimensions of 48 in by 48 in and have black legend and border on an orange reflectorized background All signs other than warning signs shall have as a minimum the dimensions shown and shall have a black legend and border on a white reflectorized background
17. Form BT 725 is required

SYMBOLS

- Work Area
- Sign with 18 in by 18 in (minimum) red flag attached
- Cone Steel Drum (55 or 30 gallon)
- Sign on portable or permanent support
- Class II or Class III Barricade with steady burning light

STATE OF ILLINOIS DEPARTMENT OF PUBLIC WORKS & BUILDINGS DIVISION OF HIGHWAYS	REVISED	
APPROVED April 3, 1969	BY	DATE
W. A. Frick, Engineer of Traffic	DAB	12 8 69
	DAB	7-1-71

CASE XVII

MULTILANE DIVIDED RURAL DAY OR NIGHT OPERATIONS

Where at any time any vehicle, equipment men or their activities require the closure of two adjacent lanes and a temporary crossover is provided by making use of one lane of pavement normally used by the opposing flow of traffic

STANDARD 2317-2

F-622 a

STANDARD DESIGN
TYPICAL APPLICATION OF TRAFFIC CONTROL DEVICES FOR HIGHWAY CONSTRUCTION AND CONTRACT MAINTENANCE

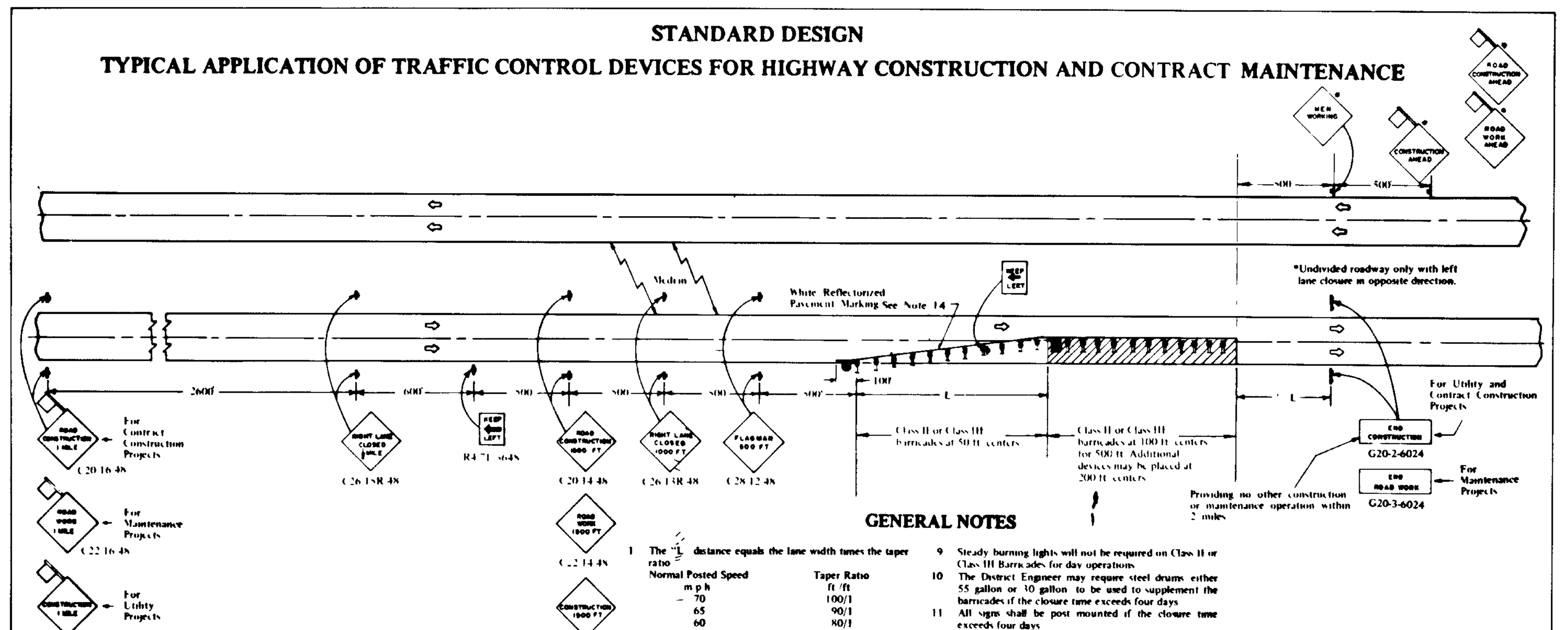

GENERAL NOTES

1. The "L" distance equals the lane width times the taper ratio

Normal Posted Speed m p h	Taper Ratio ft /ft
70	100/1
65	90/1
60	80/1
55	70/1
50	60/1
45 or less	50/1

2. When there is no work being performed the FLAGMAN 500 FT sign(s) flagmen and any MEN WORKING sign(s) will not be required A RIGHT LANE CLOSED 500 FT sign(s) shall be installed in place of the FLAGMAN 500 FT sign(s)
3. High intensity flashing lights shall be used on each approach in advance of the work area and installed above the first two signs in each series
4. This case also applies when work is being performed in the left lane Under these conditions LEFT LANE CLOSED signs shall be substituted for RIGHT LANE CLOSED signs On undivided highways signs shall be added in the opposite direction as shown (high intensity flashing lights will not be required on these signs) and cones shall be placed along the center line throughout the taper and work area
5. Signs mounted in the median may be omitted when the median is less than 10 feet wide
6. This case does not apply when work is being performed in the middle lane(s) of a six or more lane highway Special plans approved by the District Engineer will be required
7. Cones may be substituted for barricades during day operations On fully access-controlled facilities cones shall be a minimum of 28 in in height
8. Utility companies may work on utility crossings on fully access-controlled freeways under emergency conditions only
9. Steady burning lights will not be required on Class II or Class III Barricades for day operations
10. The District Engineer may require steel drums either 55 gallon or 30 gallon to be used to supplement the barricades if the closure time exceeds four days
11. All signs shall be post mounted if the closure time exceeds four days
12. High intensity flashing lights shall be used on each approach in advance of the work area and installed above the first two signs in each series
13. Reflectorized temporary pavement marking may be omitted if closure time is less than four days
14. When a side road intersects the highway on which work is being performed additional traffic control devices shall be erected and flagmen provided as directed by the District Engineer
15. Longitudinal dimensions may be adjusted slightly to fit field conditions The lateral placement of the flagmen may be varied from that shown The flagman shown at the beginning of the work area shall be stationed approximately 100 feet in advance of the work party
16. All warning signs shall have minimum dimensions of 48 in by 48 in and have black legend and border on an orange reflectorized background All signs other than warning signs shall have as a minimum the dimensions shown and shall have a black legend and border on a white reflectorized background
17. All vehicles equipment men and their activities are restricted at all times to one side of the pavement unless otherwise authorized by the District Engineer
18. Form BT 725 is required

SYMBOLS

- Work Area
- Sign with 18 in by 18 in (minimum) red flag attached
- Sign on portable or permanent support
- Flagman with Traffic Control sign
- Class II or Class III Barricade with steady burning light

STATE OF ILLINOIS DEPARTMENT OF PUBLIC WORKS & BUILDINGS DIVISION OF HIGHWAYS	REVISED	
APPROVED April 3, 1969	BY	DATE
W. A. Frick, Engineer of Traffic	DAB	12 8 69
	DAB	7-1-71

CASE XVI

MULTILANE, DIVIDED AND UNDIVIDED, RURAL OPERATIONS EXCEEDING ONE DAYLIGHT OPERATION

Where, at any time, any vehicle, equipment, men or their activities will encroach on any portion of the lane immediately adjacent to the shoulder or on the shoulder within 2 feet of the edge of pavement

STANDARD 2316-2

F-621 a

STANDARD DESIGN
TYPICAL APPLICATION OF TRAFFIC CONTROL DEVICES FOR HIGHWAY CONSTRUCTION AND MAINTENANCE

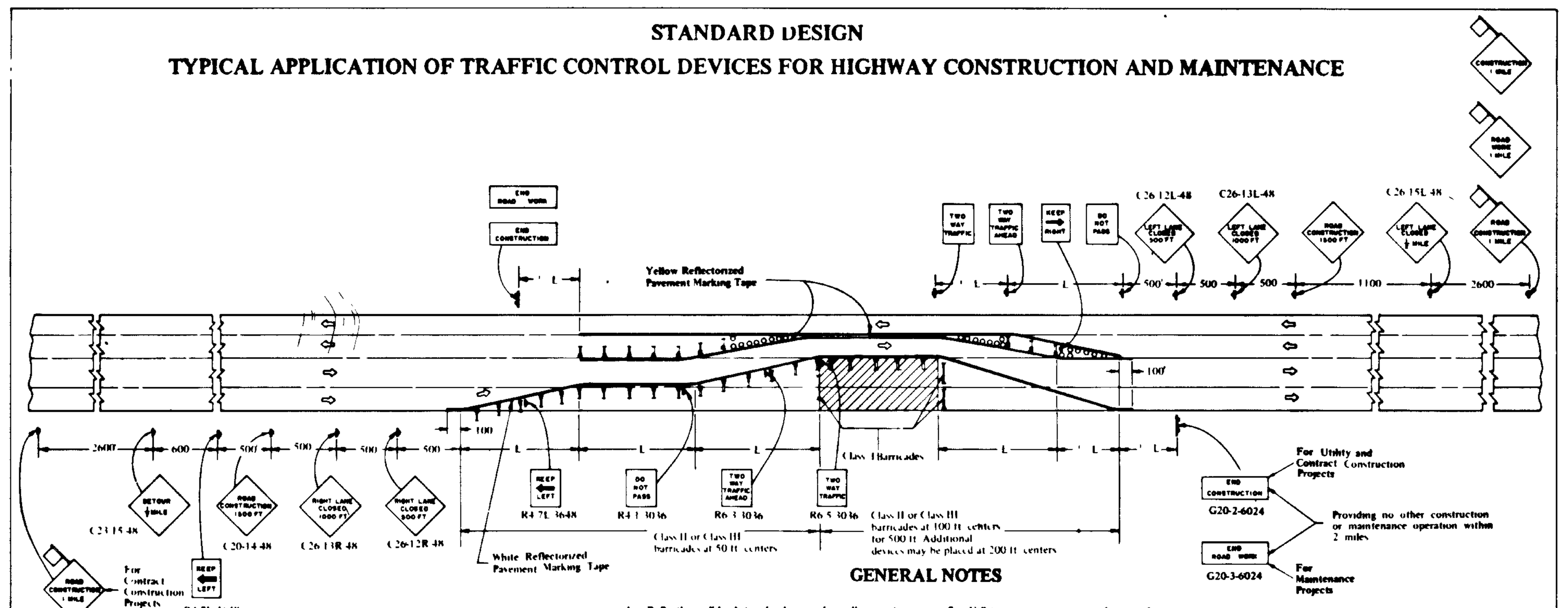

GENERAL NOTES

1. Reflective solid white edge lines and a yellow center line shall be used when the closure time exceeds four days or when the normal posted speed outside the area of operations exceeds 50 miles per hour In all cases, temporary reflectorized pavement marking tape shall be used for marking a new center line and edge lines on the existing pavement All existing markings which conflict with the revised traffic pattern will be covered with black nonreflectorized pavement marking tape or painted out
2. TWO-WAY TRAFFIC sign(s) shall be repeated every one-quarter mile in each direction through the tangent distance(T)
3. When (T) is greater than 500 feet 4-foot lengths of double yellow reflectorized pavement marking tape at 50 foot centers may be used
4. This case does not apply when work is being performed in the middle lane(s) of a six or more lane highway Special plans approved by the District Engineer will be required
5. Cones may be substituted for barricades during day operations On fully access controlled facilities cones shall be a minimum of 28 in in height
6. The "L" distance equals the lane width times the taper ratio

Normal Posted Speed m p h	Taper Ratio ft /ft
70	100/1
65	90/1
60	80/1
55	70/1
50	60/1
45 or less	50/1

7. Utility companies may work on utility crossings on fully access-controlled freeways under emergency conditions only
8. Steady burning lights will not be required on Class II or Class III Barricades for day operations
9. The District Engineer may require steel drums either 55 gallon or 30 gallon to be used to supplement the barricades if the closure time exceeds four days.
10. All signs shall be post mounted if the closure time exceeds four days.
11. High intensity flashing lights shall be used on each approach in advance of the work area and installed above the first two signs in each series
12. When a side road intersects the highway on which work is being performed additional traffic control devices shall be erected and flagmen provided as directed by the District Engineer
13. Longitudinal dimensions may be adjusted slightly to fit field conditions
14. All warning signs shall have minimum dimensions of 48 in by 48 in and have black legend and border on an orange reflectorized background All signs other than warning signs shall have as a minimum the dimensions shown and shall have a black legend and border on a white reflectorized background
15. All vehicles equipment men and their activities are restricted at all times to one side of the pavement unless otherwise authorized by the District Engineer
16. Form BT 725 is required

SYMBOLS

- Work Area.
- Sign with 18 in by 18 in (minimum) red flag attached.
- Cone Steel Drum (55 or 30 gallon).
- Sign on portable or permanent support
- Class II or Class III Barricade with steady burning light

STATE OF ILLINOIS DEPARTMENT OF PUBLIC WORKS & BUILDINGS DIVISION OF HIGHWAYS	REVISED	
APPROVED April 3, 1969	BY	DATE
W. A. Frick, Engineer of Traffic	DAB	12 8 69
	DAB	7-1-71

CASE XVIII

MULTILANE, TWO WAY TRAFFIC, UNDIVIDED, RURAL DAY OR NIGHT OPERATIONS

Where, at any time, any vehicle, equipment, men or their activities require the closure of two adjacent lanes and a temporary runaround is provided by making use of one lane of pavement normally used by the opposing flow of traffic

STANDARD 2318-2

F-623 a

BRIDGE & VIADUCT SECTION

DRAWN BY Repro.
CHECKED BY
CORRECT ____ IN CHARGE OF DESIGN
APPROVED ____ ASST CHIEF BRIDGE ENGINEER
APPROVED ____ CHIEF BRIDGE ENGINEER

Approved Frank Chen
COORDINATOR

MURPHY ENGINEERING INC.
Contract No 40082

CITY OF CHICAGO
DEPARTMENT OF PUBLIC WORKS
BUREAU OF ENGINEERING

IRVING PARK ROAD BRIDGE
OVER NORTH BRANCH CHICAGO RIVER
REPAIRS

TRAFFIC CONTROL DEVICES

SCALE: NONE
SHEET NO. 6 OF 8 SHEETS
DRWG. NO. 36055
FILE NO. 11-A27-97

1660820105

STANDARD DESIGN
TYPICAL APPLICATION OF TRAFFIC CONTROL DEVICES FOR HIGHWAY CONSTRUCTION AND MAINTENANCE

TYPICAL APPLICATIONS OF TYPE III BARRICADES CLOSING A ROAD

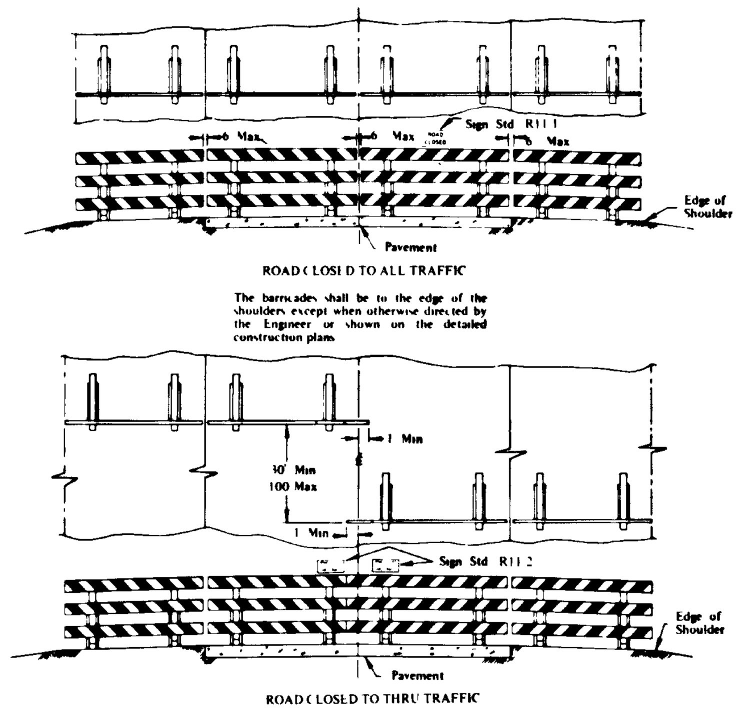

The barricades shall be to the edge of the shoulders except when otherwise directed by the Engineer or shown on the detailed construction plans.

Reflectorized striping shall appear on both sides of barricades. The barricades shall be to the edge of the shoulders except when otherwise directed by the Engineer or shown on the detailed construction plans.

TYPICAL SIGN INSTALLATIONS

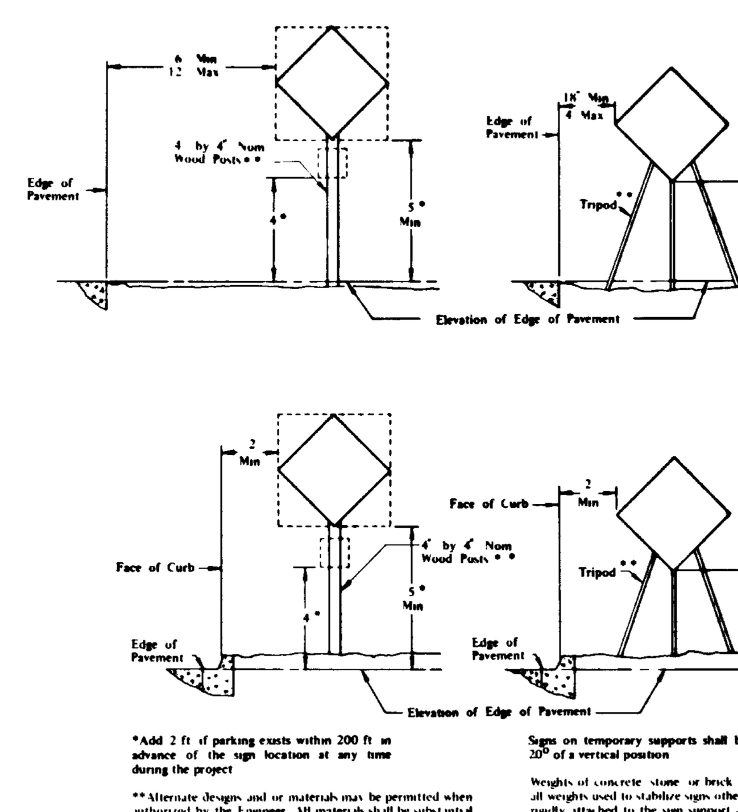

*Add 2 ft if parking exists within 200 ft in advance of the sign location at any time during the project

**Alternate designs and or materials may be permitted when authorized by the Engineer. All materials shall be substantial and durable

Signs on temporary supports shall be within 20° of a vertical position

Weights of concrete stone or brick will not be allowed and all weights used to stabilize signs other than sandbags must be rigidly attached to the sign support as close to the ground as possible

STATE OF ILLINOIS DEPARTMENT OF TRANSPORTATION	ISSUED 4-3-69	
	REVISED	
	BY	DATE
APPROVED ____ 1973 Engineer of Traffic		

STANDARD 2298-4

F-601 c

STANDARD DESIGN
TYPICAL APPLICATION OF TRAFFIC CONTROL DEVICES FOR HIGHWAY CONSTRUCTION AND MAINTENANCE

Sequence of Operations						
Phase	A			B		
Interval	1	2	3	4	5	6
Northbound or Eastbound	G	Y	R	R	R	R
Southbound or Westbound	R	R	R	G	Y	R

If A D T is	Maximum Distance (ft)
>8000	300
>5000 <8000	500
<5000	700

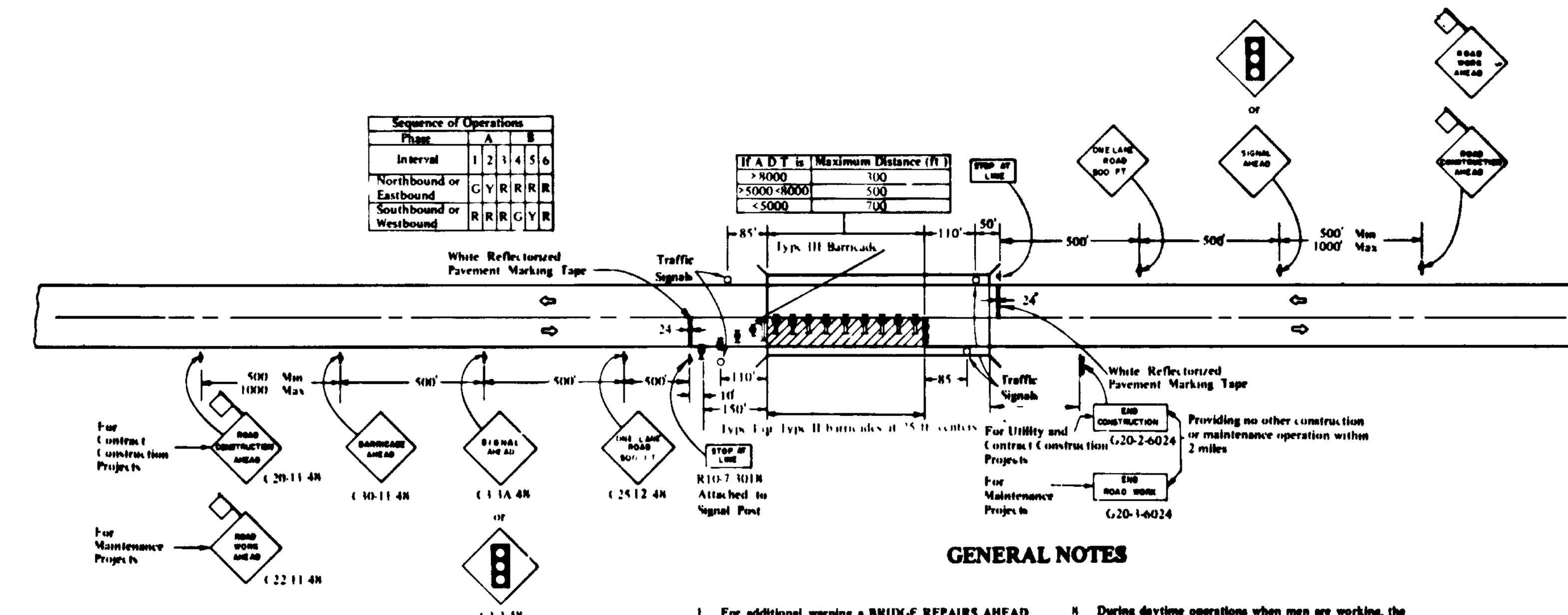

SYMBOLS

- Work Area
- Sign with 18 in by 18 in (minimum) orange flag attached
- Sign on portable or permanent support.
- Type I or Type II Barricade with flashing lights
- Type I or Type II Barricade with steady burning light

TYPICAL APPLICATION

Bridge Deck Repair

GENERAL NOTES

1. For additional warning a BRIDGE REPAIRS AHEAD sign may be installed ahead of the ROAD CONSTRUCTION AHEAD or ROAD WORK AHEAD sign. The distance between successive signs shall be 500 ft.
2. The Engineer must be notified at least 72 hours prior to placing the temporary signals in operation so that arrangements can be made to inspect the installation and set the timing of the signals. The Contractor must furnish timing cycle gears of 60, 65, 70, 80, 90, 100 and 110 seconds for the controller.
3. At any time that the signals are not operating the signal head shall be hooded and the SIGNAL AHEAD sign covered or removed.
4. The left signal head shall normally be mounted at a height of 10 feet above the road surface measured to the bottom of the signal head. The right head shall normally be mounted at a height of 14 feet above the road surface. Baffle plates will be required on all signals.
5. All red lenses shall normally be 12 inch nominal diameter. The right signal head shall be aimed so the centers of the light beams of the indications are directed toward a point in the center of the approach lane 500 feet in advance of the signal. The left indication shall be aimed at a point in the center of the approach lane 100 feet in advance of the stop line.
6. If flagmen are used instead of traffic signals the traffic control devices shall conform to Case III or Case IV.
7. Cones may be substituted for barricades with steady burning lights at half the spacing during daytime operations.
8. During daytime operations when men are working, the Engineer may allow the barricades to be placed parallel to the center line.
9. Steady burning lights will not be required for day operations.
10. The taper shall be formed by placing one barricade for each two foot of lane width.
11. Bidirectional lights shall be used at night along the center line whether the work area is separated from the travelled lane using barricades or by using other devices. Monodirectional lights shall be used at night on all other barricades.
12. The Engineer may require drums either 55 gallon or 30 gallon to be used to supplement the barricades if the closure time exceeds four days.
13. All signs shall be post mounted if the closure time exceeds four days.
14. High intensity flashing lights shall be used on each approach in advance of the work area during hours of darkness and installed above the first two signs in each series.
15. Longitudinal dimensions may be adjusted slightly to fit field conditions.
16. All warning signs shall have minimum dimensions of 48 in by 48 in and have black legend and border on an orange reflectorized background. All signs other than warning signs shall have as a minimum the dimensions shown and shall have a black legend and border on a white reflectorized background.
17. All vehicles, equipment, men and their activities are restricted at all times to one side of the pavement unless otherwise authorized by the Engineer.
18. Form BT 725 is required

CASE IX

TWO-LANE, TWO WAY TRAFFIC, RURAL ONE LANE CLOSURE ON A BRIDGE DECK DAY OR NIGHT OPERATIONS

Where, at any time, any vehicle, equipment, men or their activities will encroach on one lane of a bridge deck and traffic signals are required.

STATE OF ILLINOIS DEPARTMENT OF TRANSPORTATION	ISSUED 4-3-69	
	REVISED	
	BY	DATE
APPROVED 6-12 1973 Engineer of Traffic		

STANDARD 2309-3

F-614 b

STANDARD DESIGN
DESIGN OF TRAFFIC CONTROL DEVICES FOR HIGHWAY CONSTRUCTION AND MAINTENANCE

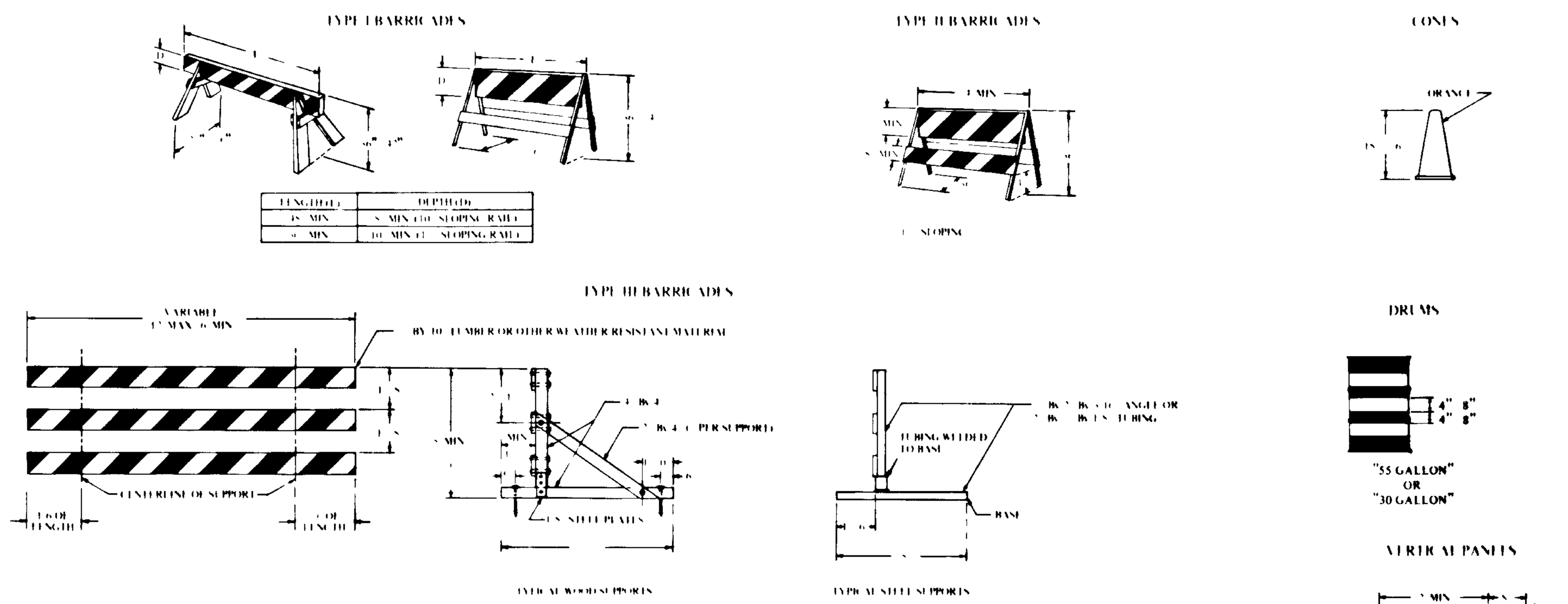

GENERAL NOTES

1. Barricade legs or supports shall be orange white or silver in color
2. All reflectorized material shall meet the latest reflective sheeting requirements of the Department to be used in construction and maintenance areas
3. All barricades and vertical panels shall have alternating reflectorized white and reflectorized orange stripes at 45° from the vertical. Barricade stripes shall be 6 inches in width on barricades 36 inches or greater in length and 4 inches in width on barricades less than 36 inches in length. Stripes on vertical panels shall be 3 inches in width
4. Type I and Type II Barricades shall be striped on both sides. Type III Barricades shall be striped on both sides where traffic approaches from either direction
5. Diagonal stripes shall slope downward at 45° toward the side on which traffic will pass
6. Vertical panels placed on the outside of curves shall be reflectorized on both sides
7. The top rail on Type I and Type II Barricades may be vertical as shown or sloping at no greater than a 30 degree angle
8. Drums shall have alternating reflectorized orange and reflectorized white horizontal circumferential stripes. Stripes shall be 4 inches to 8 inches in width. If non reflective spaces are left between the orange and white stripes or at the top and bottom of the drum they shall be no more than 2 inches in width and shall be painted orange or white. Other than for these 2 inch spaces the entire drum shall be striped
9. Frames shown are typical. Alternate designs and or materials may be permitted when authorized by the Engineer. All materials shall be substantial and durable. Nominal lumber sizes are acceptable to satisfy dimensions
10. Barricades may be identified with a legend that does not exceed one inch in height at a location not visible to traffic
11. Weights of concrete stone or brick will not be allowed and all weights used to stabilize barricades other than sandbags must be rigidly attached to the barricades as close to the ground as possible. No weights or sandbags will be allowed on the top rail of barricades. Drums may be weighted internally with just enough sand water or other material to provide stability
12. When used warning lights on Type I and Type II Barricades shall be mounted above the top rail to the side on which traffic will pass and shall not obscure any reflectorized portion of the rail

VERTICAL PANELS

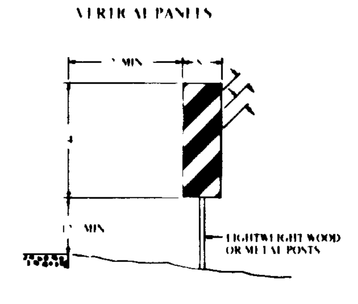

STATE OF ILLINOIS DEPARTMENT OF TRANSPORTATION	ISSUED 4 3 69	
	REVISED	
	BY	DATE
APPROVED 12-27-74 Engineer of Traffic	RY	6 1 76

STANDARD 2299-7

F-602 d

F603a

STANDARD DESIGN FOR FLAGMAN TRAFFIC CONTROL SIGN

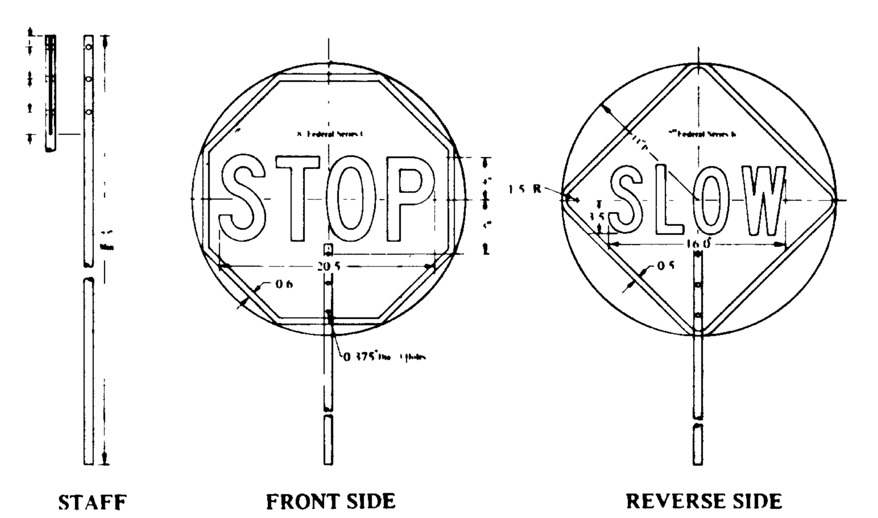

GENERAL NOTES

1. The "STOP" face shall consist of white letters and border on a red reflectorized background
2. The "SLOW" face shall consist of black letters and border on a orange reflectorized background
3. Areas outside sign borders shall be light blue
4. The portion of the staff within the sign face shall match the sign colors
5. All colors and letters shall meet applicable federal standards
6. The sign shall be attached to the staff with rust resistant hardware
7. The staff shall consist of two sections joined by a coupling located 60 in from the bottom of the staff. Alternate designs may be used when approved by the Engineer. All materials shall be substantial and durable
8. This sign shall be furnished by the contractor and shall be used by the flagman in lieu of flags or other signaling devices. The cost of furnishing and maintaining the sign shall be considered incidental to the contract and no additional compensation will be allowed

STATE OF ILLINOIS DEPARTMENT OF TRANSPORTATION	ISSUED 4-3-69	
	REVISED	
	BY	DATE
APPROVED 6-12 1973 Engineer of Traffic		

STANDARD 2300-1

ROAD
CLOSED
BY ORDER OF
VIOLATORS SUBJECT TO ARREST
OPEN ONLY
TO RESIDENT AND CONTRACTORS TRAFFIC

SIGN
(STD R10-20-3024)

REVISIONS

BRIDGE & VIADUCT SECTION
DRAWN BY REPRO
CHECKED BY
CORRECT ____ IN CHARGE OF DESIGN
APPROVED ____ ASST CHIEF BRIDGE ENGINEER
APPROVED ____ CHIEF BRIDGE ENGINEER

MURPHY ENGINEERING INC.
Contract No. 40082

CITY OF CHICAGO
DEPARTMENT OF PUBLIC WORKS
BUREAU OF ENGINEERING

IRVING PARK ROAD BRIDGE
OVER NORTH BRANCH CHICAGO RIVER
REPAIRS

BARRICADES AND TRAFFIC CONTROL DEVICES

SCALE: NONE
SHEET NO. 7 OF 8 SHEETS
DRWG. NO. 36056   FILE NO. 11-A27-98

1660820106

SCAN LINES, INC. CHICAGO

REVISIONS

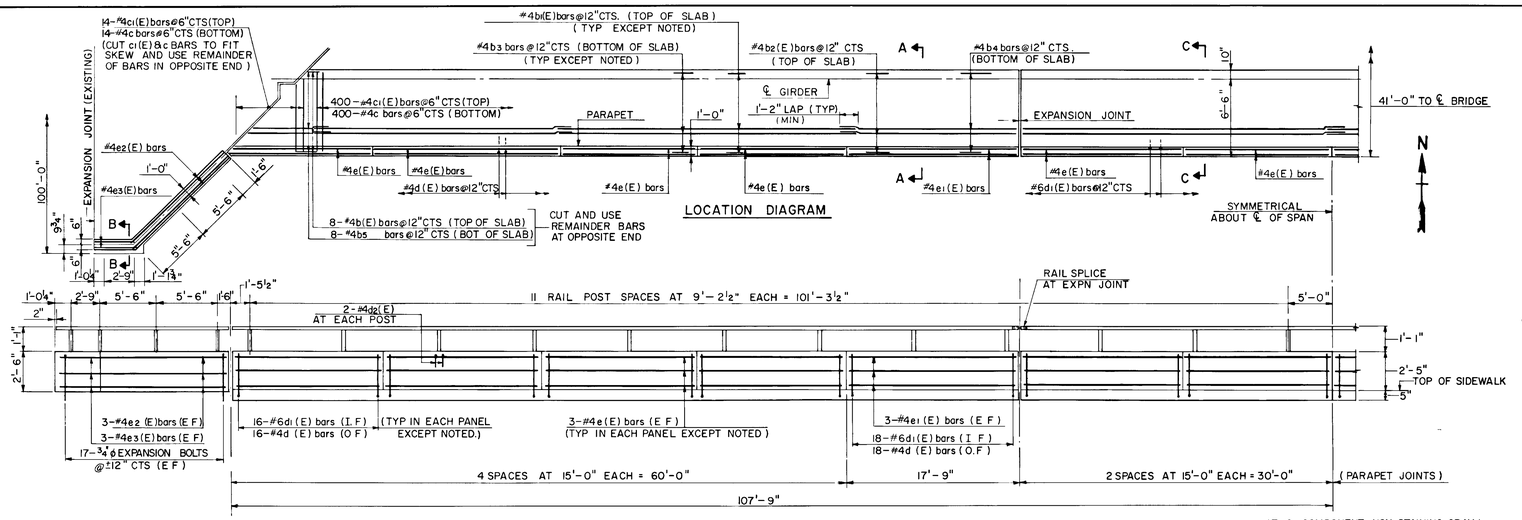

LOCATION DIAGRAM

SOUTH ELEVATION
SHOWING WEST HALF, EAST HALF OPPOSITE HAND

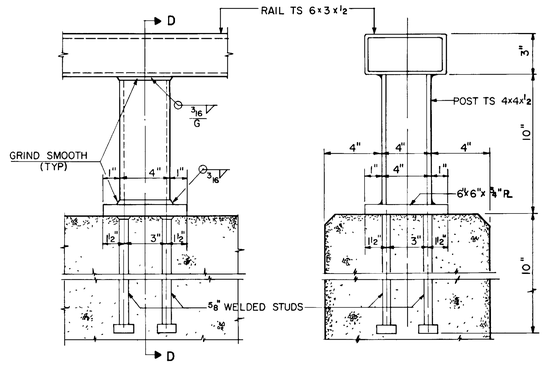

ELEVATION

SECTION D-D

RAIL POST DETAILS

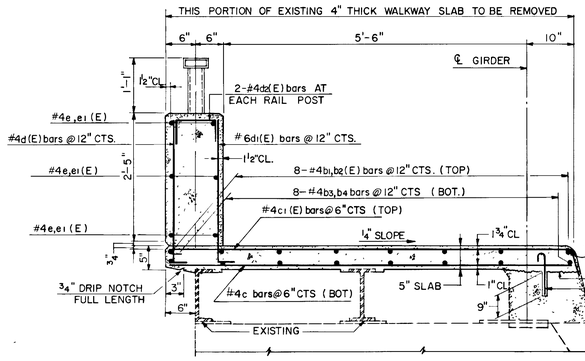

SECTION A-A

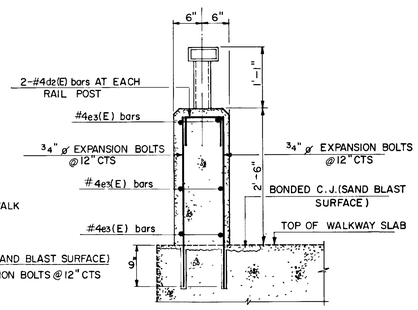

SECTION B-B

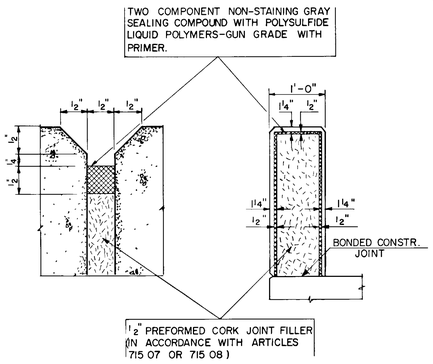

DETAILS OF PARAPET JOINT

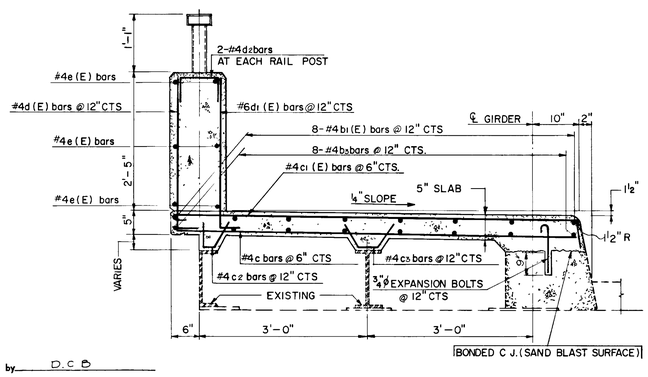

SECTION C-C

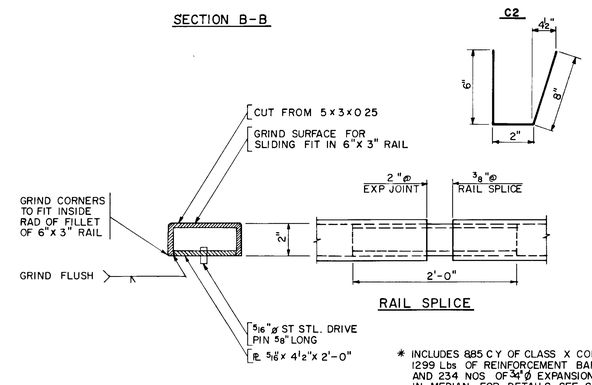

SECTION THRU SPLICE

RAIL SPLICE

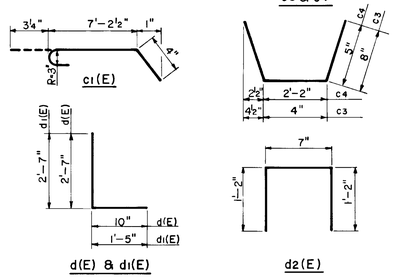

* INCLUDES 885 C.Y OF CLASS X CONCRETE, 1299 Lbs OF REINFORCEMENT BARS AND 234 NOS OF ¾"ø EXPANSION BOLTS IN MEDIAN FOR DETAILS SEE SH NO 5

NOTES:

ALL POSTS SHALL BE NORMAL TO PARAPET.
ALL STEEL SHAPE HANDRAIL SHALL BE SUPPLIED IN MODULAR LENGTHS OF 30 FEET, EXCEPT AT THE END OF PARAPET OR OVER OPEN JOINTS IN BRIDGE DECK WHERE THE RAIL SHALL BE ATTACHED TO A MINIMUM OF 2 POSTS.
ALL JOINTS IN RAIL SHALL BE SPLICED PER DETAIL.
PROVIDE 1-⅛" AND 2-1/16" STEEL SHIMS FOR 25% OF THE POSTS
RAIL ELEMENTS SHALL BE PARALLEL TO GRADE, HIGH SPOTS SHALL BE GROUND AND LOW SPOTS SHIMMED.
RAILING SHALL BE IN ACCORDANCE WITH SECTION 508 OF THE ILLINOIS STANDARD SPECIFICATIONS, EXCEPT AS NOTED.
SAND-BLAST ALL EXPOSED SURFACES OF NEW CONCRETE PARAPET TO PRODUCE A MEDIUM PENETRATION, EXPOSED AGGREGATE FINISH.
THE CONCRETE RAIL SECTION ABOVE THE MANDATORY CONSTRUCTION JOINT AT THE TOP OF THE SIDEWALK SLAB SHALL BE CONSTRUCTED OF CLASS X CONCRETE EXCEPT THE AGGREGATES SHALL CONFORM TO THE REQUIREMENTS OF HANDRAIL CONCRETE.

BILL OF MATERIAL *

ITEM	UNIT	QUANTITY
REINFORCEMENT BARS	POUND	7793
REINFORCEMENT BARS (EPOXY COATED)	POUND	12630
CLASS X CONCRETE	C.Y	100.4
FURNISHING & ERECTING STEEL RAILING	L.F	494
CONCRETE REMOVAL	C.Y	37.7
PROTECTIVE COAT	Sq Yds	600
SIDEWALK TOPPING	Sq Ft	682
¾"ø EXPANSION BOLTS	Ea	776
SIDEWALK REMOVAL, 1 INCH	Sq Ft	682

REINFORCEMENT BAR SCHEDULE

BAR	NO	SIZE	LENGTH	SHAPE
b(E)	16	# 4	7'-0"	
b1(E)	96	# 4	31'-4"	
b2(E)	32	# 4	11'-5"	
b3	96	# 4	31'-4"	
b4	32	# 4	11'-5"	
b5	16	# 4	7'-0"	
c	828	# 4	7'-1"	
c1(E)	828	# 4	7'-9¾"	
c2	124	# 4	1'-4"	
c3	124	# 4	1'-8"	
d(E)	456	# 4	3'-5"	
d1(E)	456	# 6	4'-0"	
d2(E)	128	# 4	2'-11"	
e(E)	144	# 4	14'-9"	
e1(E)	24	# 4	17'-6"	
e2(E)	24	# 4	12'-0"	
e3(E)	24	# 4	3'-6"	
b6	24	# 5	30'-0"	
c4	175	# 5	3'-0"	

CITY OF CHICAGO
DEPARTMENT OF PUBLIC WORKS
BUREAU OF ENGINEERING

IRVING PARK ROAD BRIDGE OVER NORTH BRANCH CHICAGO RIVER REPAIRS

SIDEWALK, PARAPET AND RAILING

Designed by D.C.B.
Drawn by K. Dr.
Checked by R.D.
Approved by H. Moorkas
Approved Frank Chen COORDINATOR

MURPHY ENGINEERING, INC.
CONTRACT NO. 40082

SCALE: NONE DATE: MARCH 21, 1979
SHEET NO. 8 OF 8 SHEETS
DRWG NO. 36049
FILE NO. 11-A27-98A

1660820107

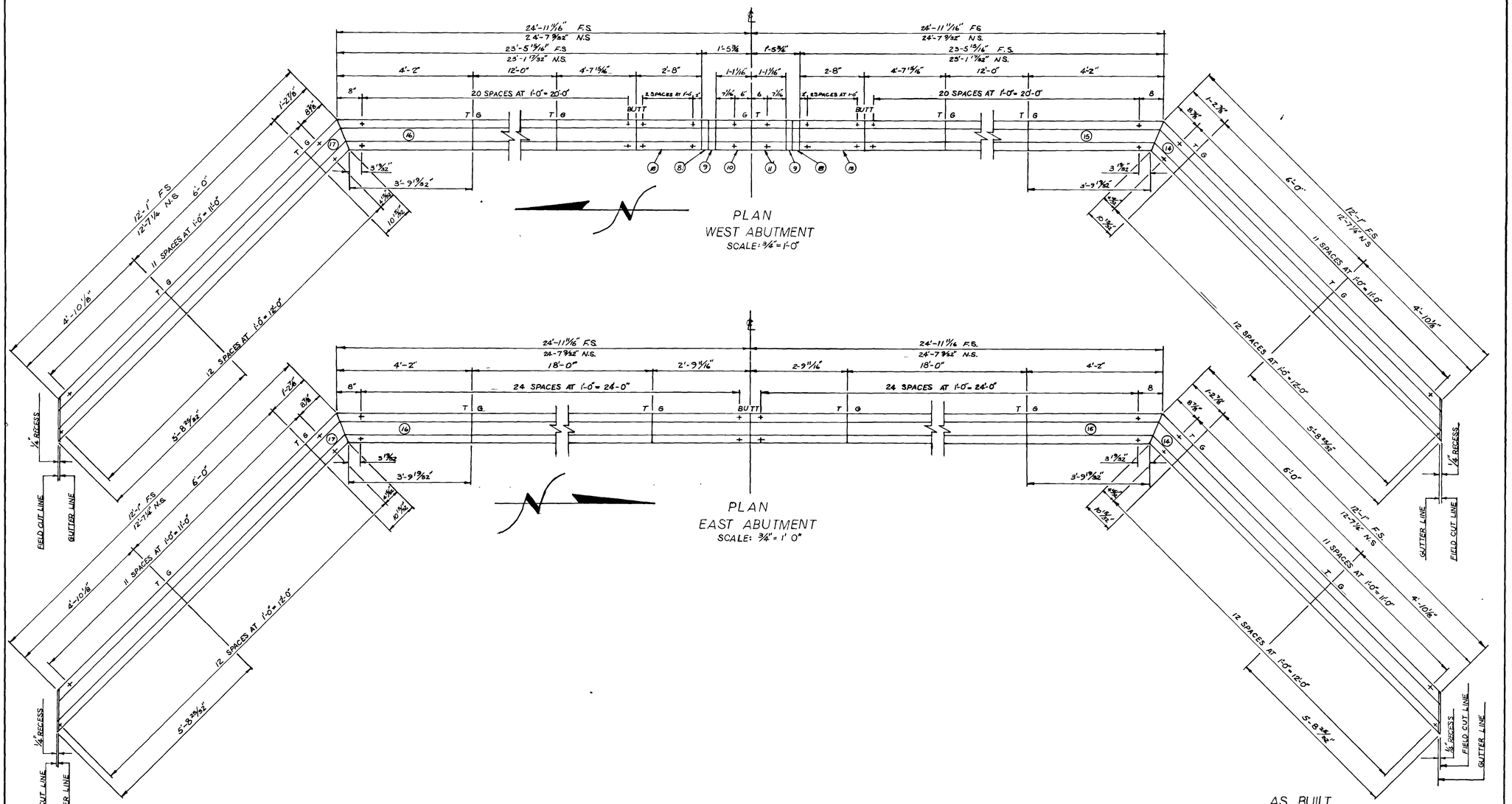

AS BUILT

CITY OF CHICAGO
DEPARMENT OF PUBLIC WORKS
BUREAU OF CONSTRUCTION
D P W PROJECT NO E-5-308
IRVING PARK ROAD BRIDGE
OVER NORTH BRANCH CHICAGO RIVER

SCALE AS SHOWN	DRWG. 36047
	FILE NO. 15-A27-98 B.

1660820108

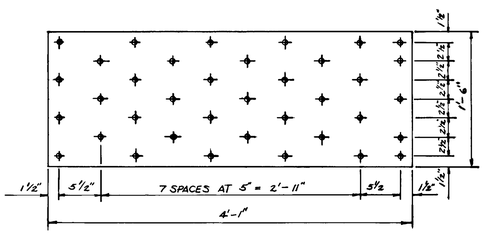

6 PLATES REQ.
¼" THICK

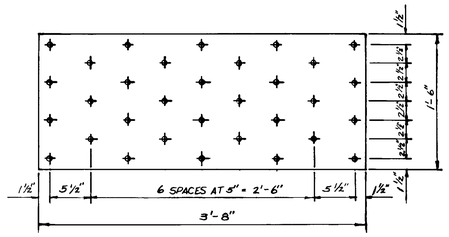

2 PLATES REQ.
¼" THICK

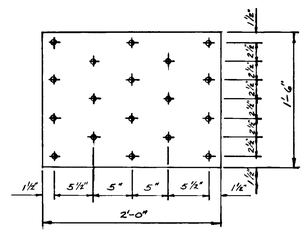

4 PLATES REQ.
¼" THICK

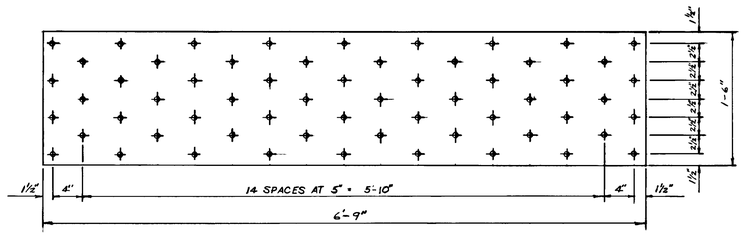

10 PLATES REQ.
¼" THICK

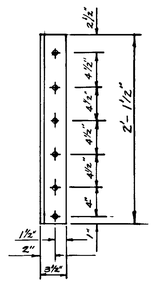

31 ANGLES REQ.
3½" by 5" ⅜" THICK

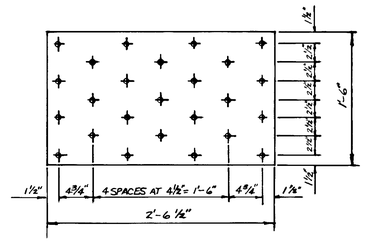

16 PLATES REQ
¼" THICK

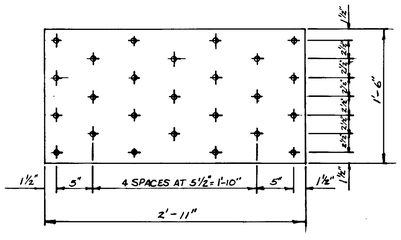

22 PLATES REQ.
¼" THICK

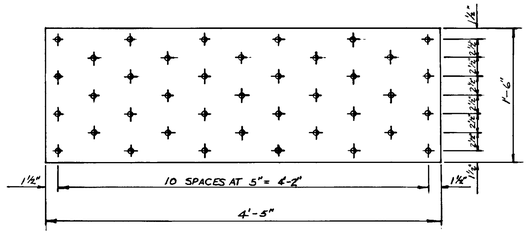

24 PLATES REQ.
¼" THICK

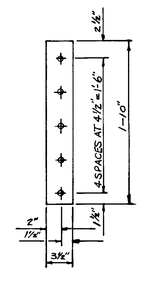

31 BARS REQ
¾" THICK

BILL OF MATERIAL		
	REQ	DESCRIPTION
	475	¾" DIA. BOLTS - 2½" LONG
	475	¾" I.D. HEX. NUTS
	475	13/16" I.D. HARD. WASH.
	975	¾" DIA. BOLTS - 2½" LONG
	975	¾" I.D HEX. NUTS
	975	13/16" I.D. HARD. WASH.
	350	⅞" DIA. BOLTS - 4" LONG
	350	⅞" I.D. HEX. NUTS
	350	15/16" HARD. WASH.

NOTE: OPEN HOLES 13/16" DIA. U.N.

AS BUILT

CITY OF CHICAGO
DEPARTMENT OF PUBLIC WORKS
BUREAU OF CONSTRUCTION
D.P.W. PROJECT NO. E-5-308
IRVING PARK ROAD BRIDGE
OVER NORTH BRANCH CHICAGO RIVER

SCALE: 1½" = 1'-0"	DRWG. 36048
	FILE NO. 15-A27-98C.

1660820109

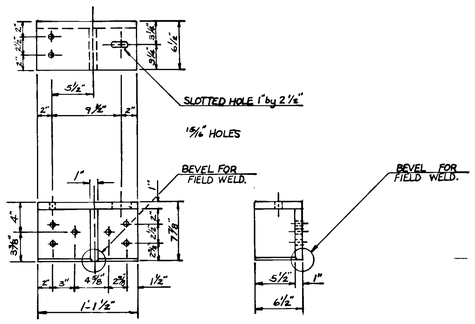

8 BRACKETS REQ.
BOTTOM

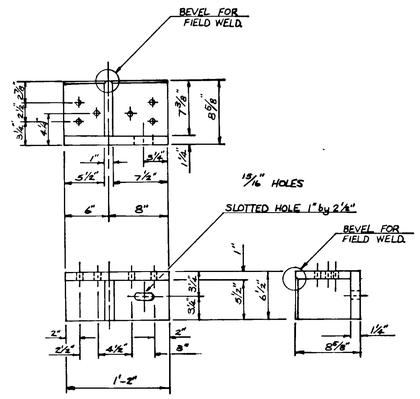

8 BRACKETS REQ.
TOP

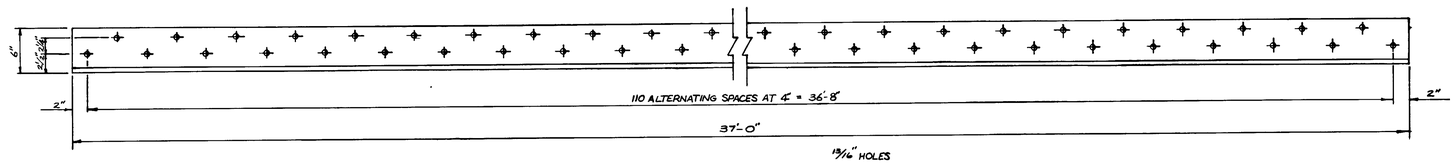

8 ANGLES REQ.
6" by 8" 5/8" THICK

AS BUILT

CITY OF CHICAGO
DEPARTMENT OF PUBLIC WORKS
BUREAU OF CONSTRUCTION
D P W PROJECT NO E-5-308
IRVING PARK ROAD BRIDGE
OVER NORTH BRANCH CHICAGO RIVER

SCALE: 1 1/2" = 1'-0"	DRWG. 36058
	FILE NO. 15-A27-98 D.

1660820110

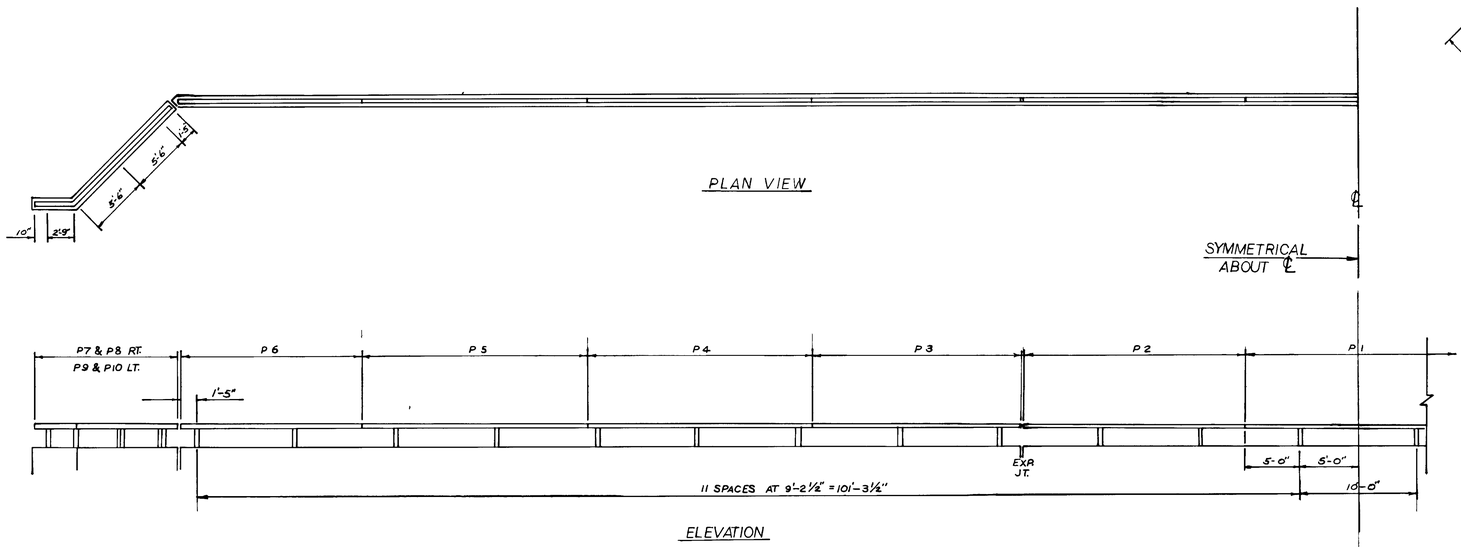

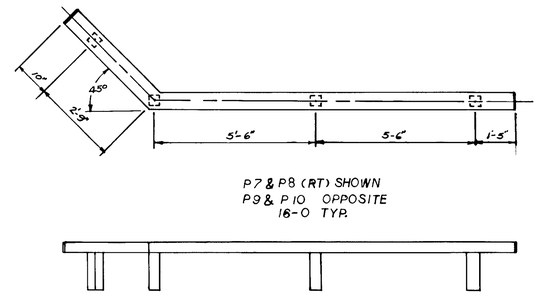

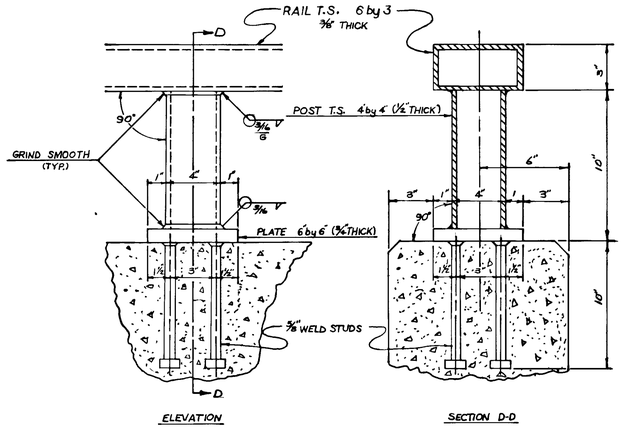

RAIL POST DETAIL

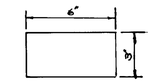

END PLATE
WELD TO END OF RAIL
P 6,7,8,9 & 10 (⅛" THICK)

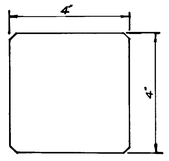

SHIM
16 REQ'D. ⅛" THICK
32 REQ'D 1/16 THICK

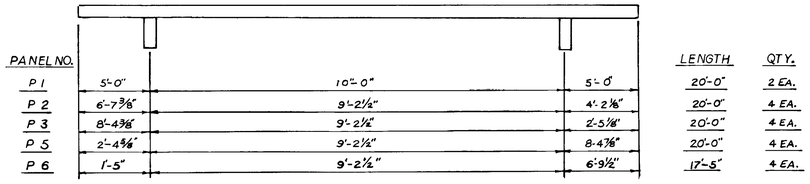

PANEL NO.				LENGTH	QTY.
P 1	5'-0"	10'-0"	5'-0"	20'-0"	2 EA.
P 2	6'-7⅜"	9'-2½"	4'-2⅛"	20'-0"	4 EA.
P 3	8'-4⅜"	9'-2½"	2'-5⅛"	20'-0"	4 EA.
P 5	2'-4⅜"	9'-2½"	8'-4⅜"	20'-0"	4 EA.
P 6	1'-5"	9'-2½"	6'-9½"	17'-5"	4 EA.

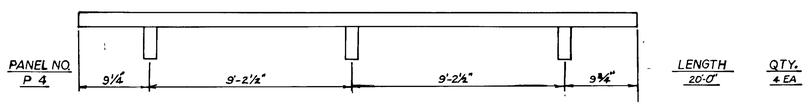

PANEL NO.				LENGTH	QTY.
P 4	9¼"	9'-2½"	9'-2½"	9¾"	20'-0"	4 EA.

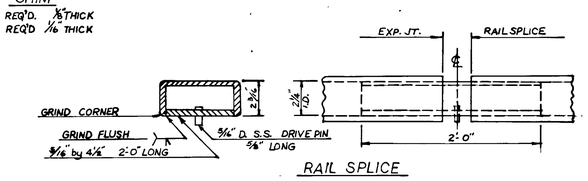

RAIL SPLICE

AS BUILT

CITY OF CHICAGO
DEPARTMENT OF PUBLIC WORKS
BUREAU OF CONSTRUCTION
D.P.W. PROJECT NO. E-5-308
IRVING PARK ROAD BRIDGE
OVER NORTH BRANCH CHICAGO RIVER

SCALE NONE	DRWG. 36059
	FILE NO. 15-A27-98 E.

1660820111

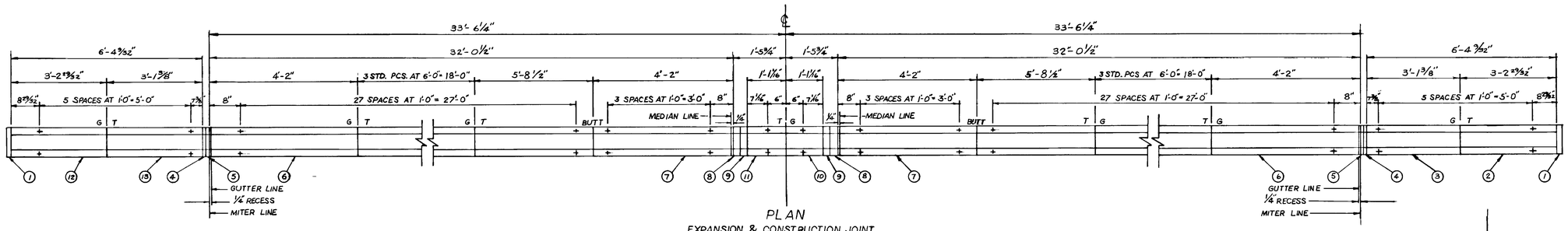

PLAN
EXPANSION & CONSTRUCTION JOINT
SCALE: ¾" = 1'-0"

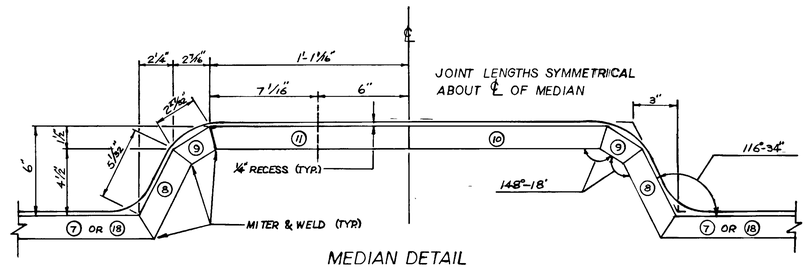

MEDIAN DETAIL
SCALE: 3" = 1'-0"

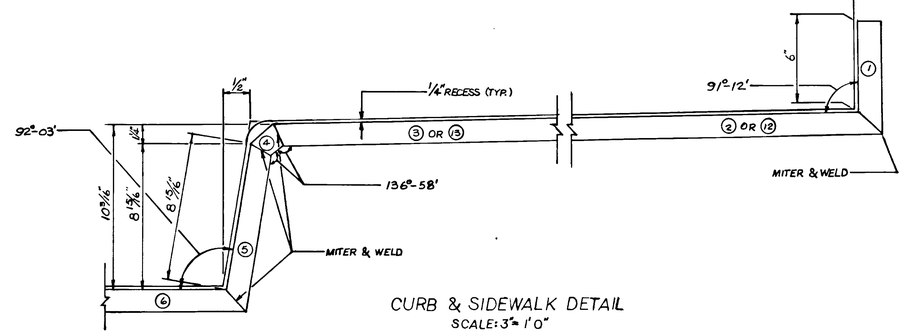

CURB & SIDEWALK DETAIL
SCALE: 3" = 1'-0"

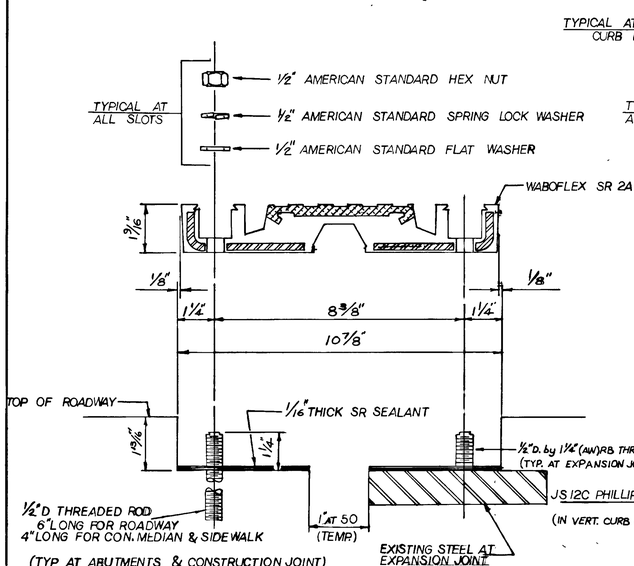

TYPICAL SECTION
SCALE: ½" = 1"

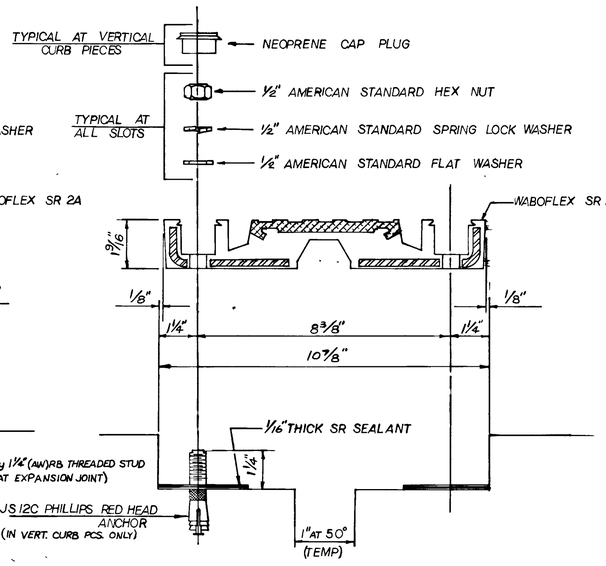

SECTION THRU VERTICAL CURBS
SCALE: ½" = 1"

T = TONGUE END
G = GROOVE END

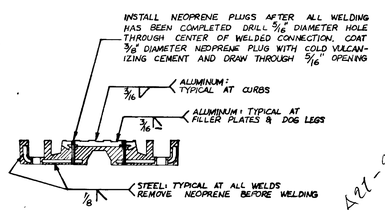

WELD. DETAIL
SCALE: ½" = 1"

36060 — 15-A27-98F

AS BUILT

CITY OF CHICAGO
DEPARTMENT OF PUBLIC WORKS
BUREAU OF CONSTRUCTION
D.P.W. PROJECT NO. E-5-308
IRVING PARK ROAD BRIDGE
OVER NORTH BRANCH CHICAGO RIVER

SCALE: AS SHOWN.	DRWG. 36060
	FILE NO. 15—A27—98F.

1660820112

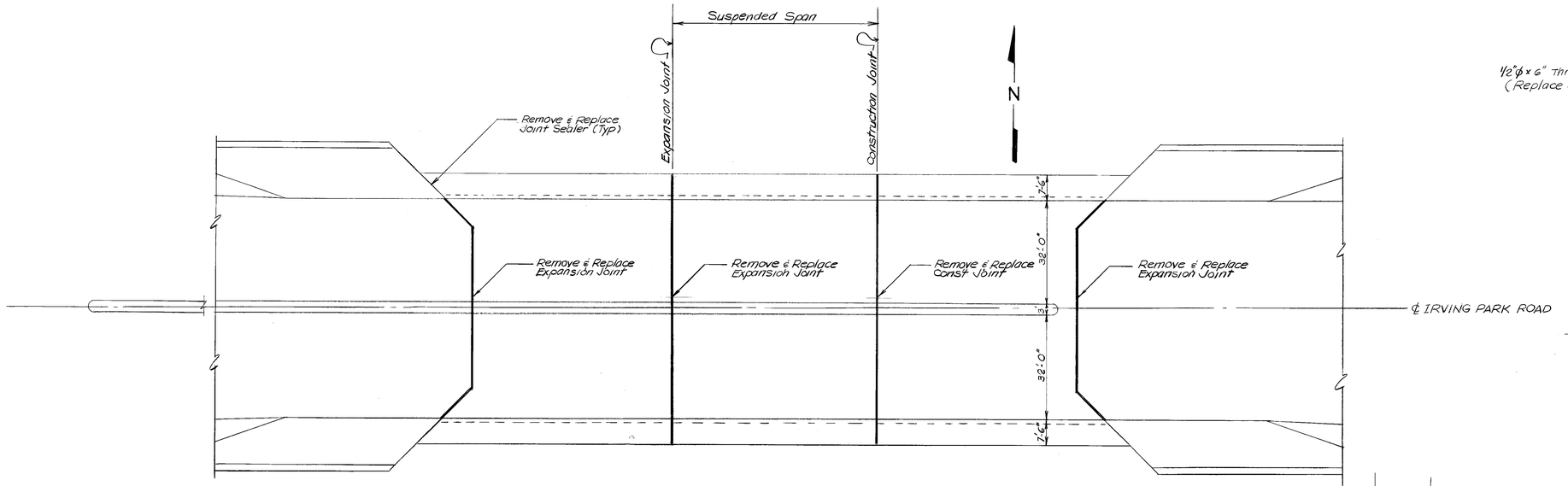

KEY PLAN
SCALE: 1/16" = 1'-0"

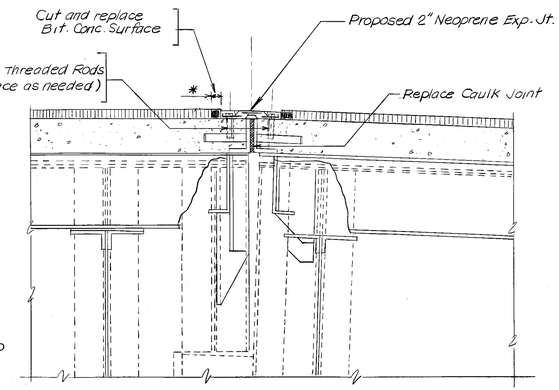

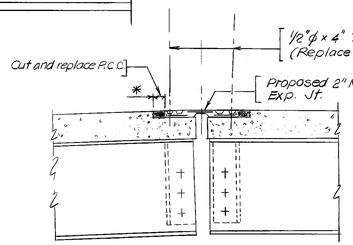

SECTION (B)
SCALE: 1 1/2" = 1'-0"

SECTION (A)
SCALE: 1" = 1'-0"

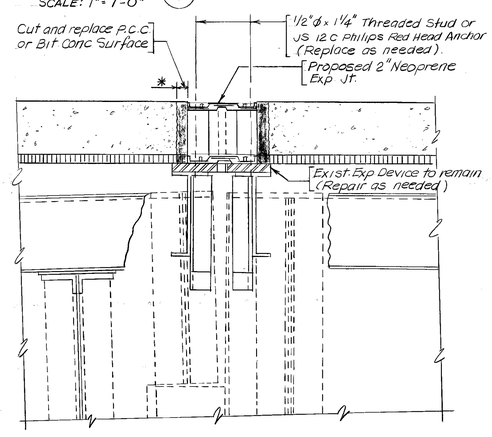

SECTION (C)
SCALE: 1" = 1'-0"

CROSS - SECTION AT EAST END OF SUSPENDED SPAN
SIDEWALK AND ROADWAY CONSTRUCTION JOINT
SCALE: 1/2" = 1'-0"

CROSS - SECTION AT WEST END OF SUSPENDED SPAN
SIDEWALK AND ROADWAY EXPANSION JOINT
SCALE: 1/2" = 1'-0"

SECTION (D)
SCALE: 1" = 1'-0"

* - Actual width to be determined in the field.
- Apply bonding agent to PC Concrete pavement prior to replacement.

NO.	BY	DATE	DESCRIPTION
	RTT	10/29/97	DATE ISSUED

REVISIONS

6082
IRVING PARK ROAD BRIDGE

T.O. C09119533

REPLACEMENT OF EXPANSION JOINTS

CITY OF CHICAGO

DEPARTMENT OF TRANSPORTATION
BUREAU OF BRIDGES AND TRANSIT

DRAWN RTT	SHEET NO.
CHECKED	1 OF 2
APPROVED	
DATE	
SCALE	
CONTRACT NO.	PROJECT NO.

1660820113 DRWG. No. FILE No.

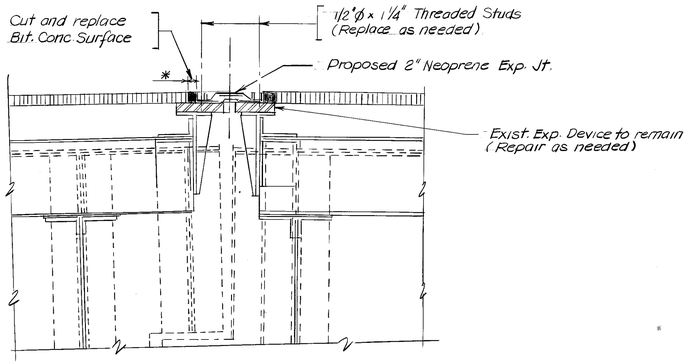

SECTION (E)
SCALE: 1"=1'-0" S-1

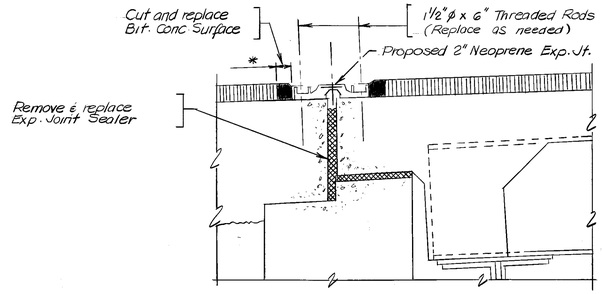

EXPANSION JOINT AT ABUTMENTS
SCALE: 1 1/2"=1'-0"

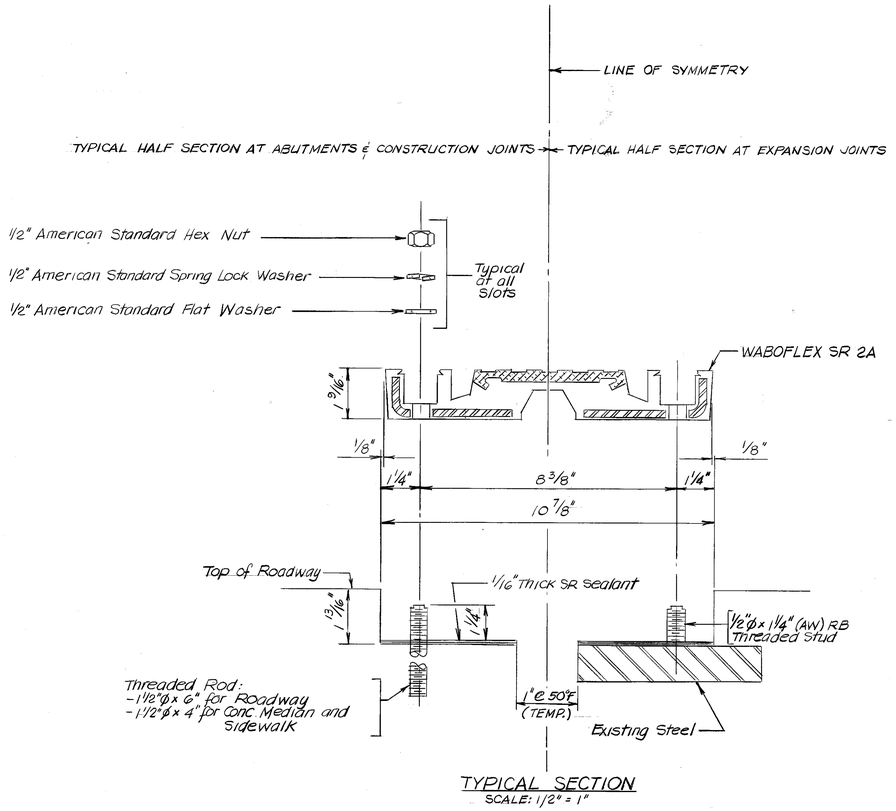

TYPICAL SECTION
SCALE: 1/2" = 1"

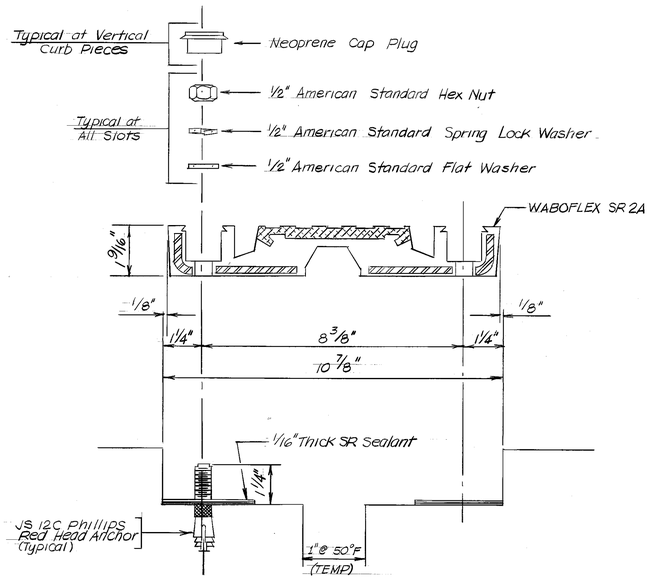

SECTION THRU VERTICAL CURBS
SCALE: 1/2" = 1"

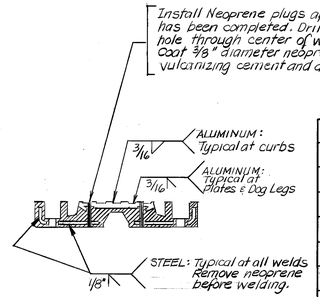

WELDING DETAIL
SCALE: 1/4" = 1"

NO.	BY	DATE	DESCRIPTION
	RTT	10/2/97	DATE ISSUED

REVISIONS

FACILITY NO. 6082
IRVING PARK ROAD BRIDGE

T.O. C09119533

REPLACEMENT OF EXPANSION JOINTS

CITY OF CHICAGO

DEPARTMENT OF TRANSPORTATION
BUREAU OF BRIDGES AND TRANSIT

DRAWN : RTT	SHEET NO. 2 OF 2
CHECKED	
APPROVED	
DATE	
SCALE	
CONTRACT NO.	PROJECT NO.

1660820111 DRWG. No. FILE No.

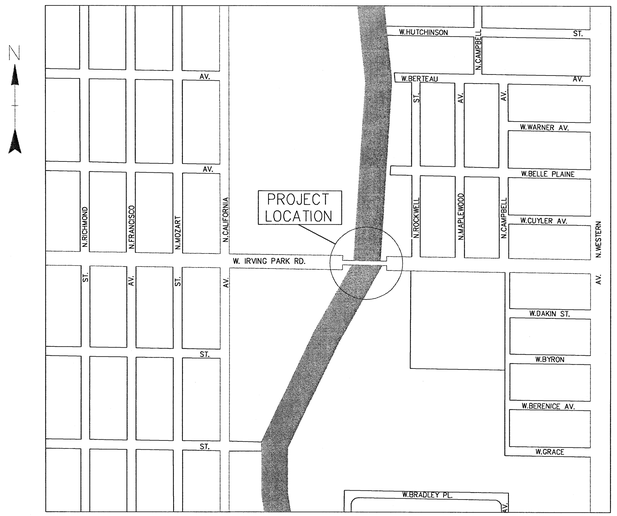

PROJECT MAP

CITY OF CHICAGO

RICHARD M. DALEY

MAYOR

DEPARTMENT OF TRANSPORTATION

MIGUEL d'ESCOTO COMMISSIONER

BUREAU OF BRIDGES & TRANSIT

THOMAS H. POWERS, P.E., DEPUTY COMMISSIONER/CHIEF ENGINEER

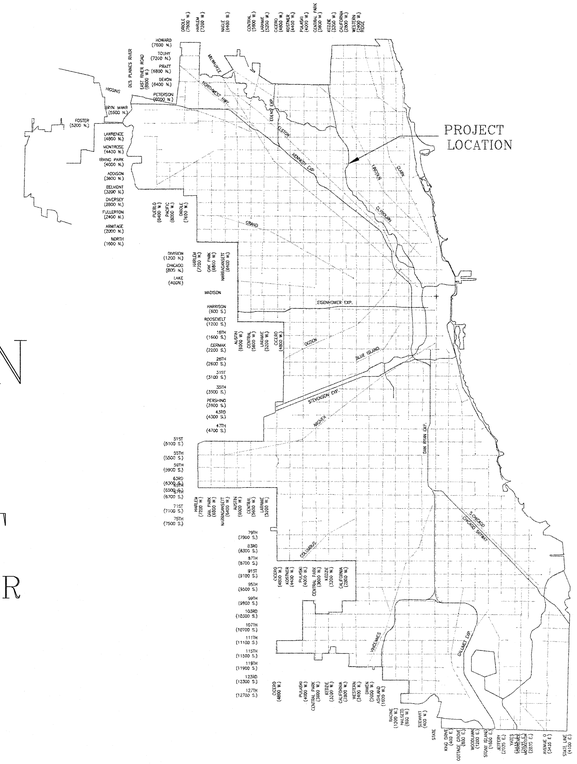

INDEX OF SHEETS:

1. COVER SHEET
2. GENERAL PLAN AND CROSS-SECTION
3. EXPANSION JOINTS (SPAN)
4. EXPANSION JOINTS (ABUTMENTS), AND JOINT DETAILS
5. EXISTING FRAMING PLAN
6. REINFORCEMENT PLAN (SPAN), BAR SCHEDULE, AND SHAPE DETAILS
7. REINFOREMENT PLAN (ABUTMENT)
8. EXPANSION PLATE DETAILS (SPAN)
9. EXPANSION PLATE DETAILS (ABUTMENTS)
10. EXPANSION PLATE DETAILS (ABUTMENTS)
11. TRAFFIC PHASING

DESIGN PLANS

FOR

IRVING PARK ROAD BRIDGE EXPANSION JOINT REPAIRS

I CERTIFY THAT TO THE BEST OF MY KNOWLEDGE, INFORMATION AND BELIEF, THIS BRIDGE DESIGN IS STRUCTURALLY ADEQUATE FOR THE DESIGN LOADING SHOWN ON THE PLANS, THE DESIGN IS AN ECONCONOMICAL ONE FOR THE TYPE OF STRUCTURE AND COMPLIES WITH THE REQUIREMENTS OF THE CURRENT "AASHTO STANDARD SPECIFICATIONS FOR HIGHWAY BRIDGES".

CDOT PROJECT NO.: E-1-051

CITY OF CHICAGO
DEPARTMENT OF TRANSPORTATION
BUREAU OF BRIDGES

DATE: JULY 8, 2002

APPROVED: _____
PROJECT MANAGER

APPROVED: _____
PROJECT COORDINATOR

APPROVED: _____
DEPUTY COMMISSIONER / CHIEF BRIDGE ENGINEER

APPROVED: _____
COMMISSIONER

1660820115

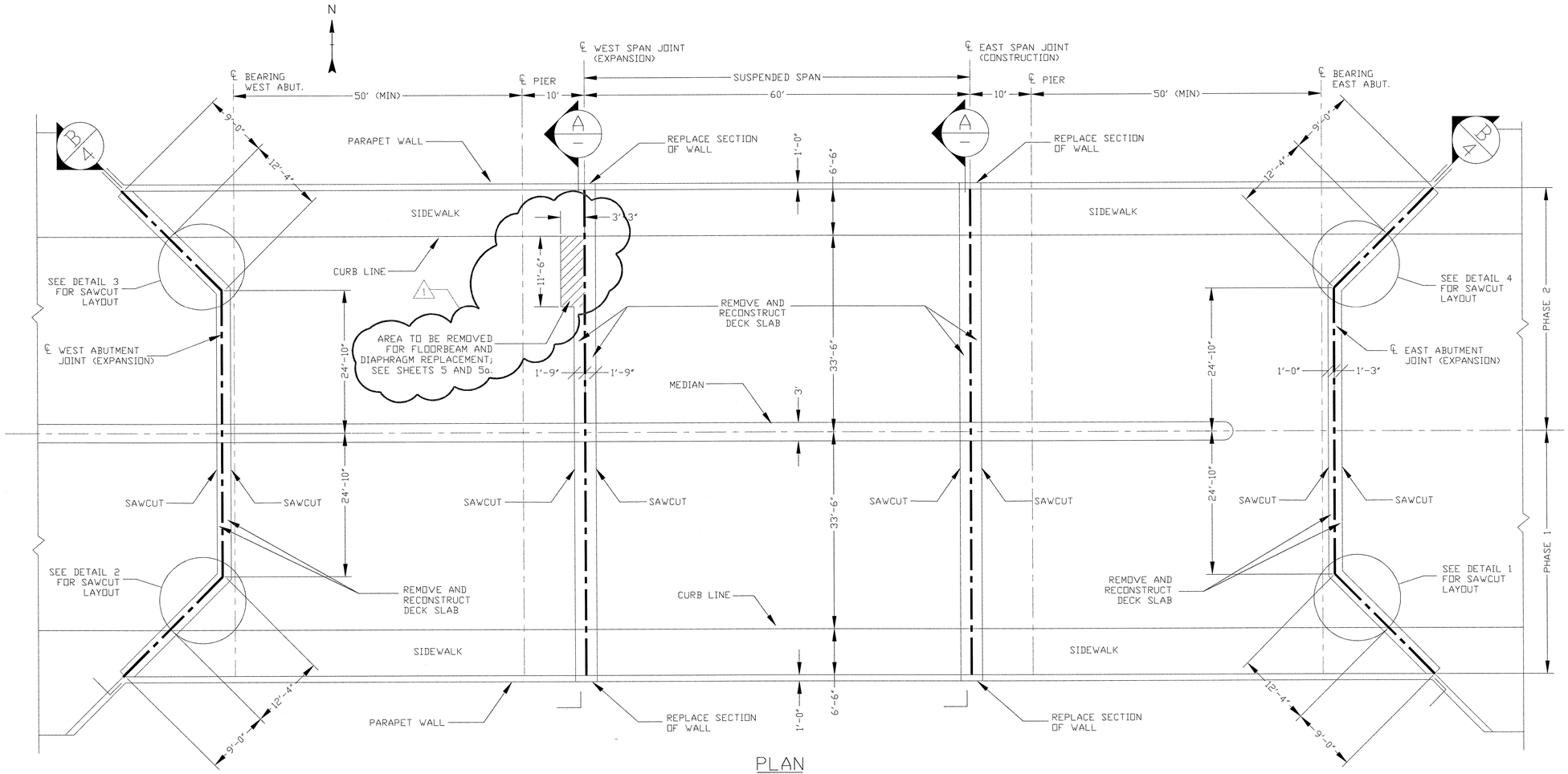

PLAN
N.T.S.

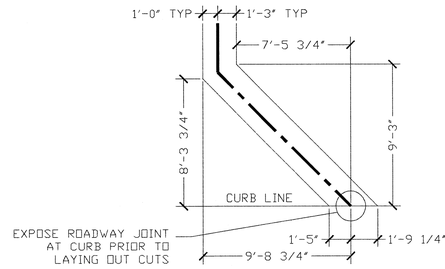

DETAIL 1
DETAIL 3 (OPP HAND)
1/4"=1'-0"

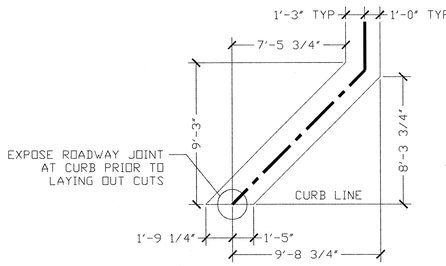

DETAIL 2
DETAIL 4 (OPP HAND)
1/4"=1'-0"

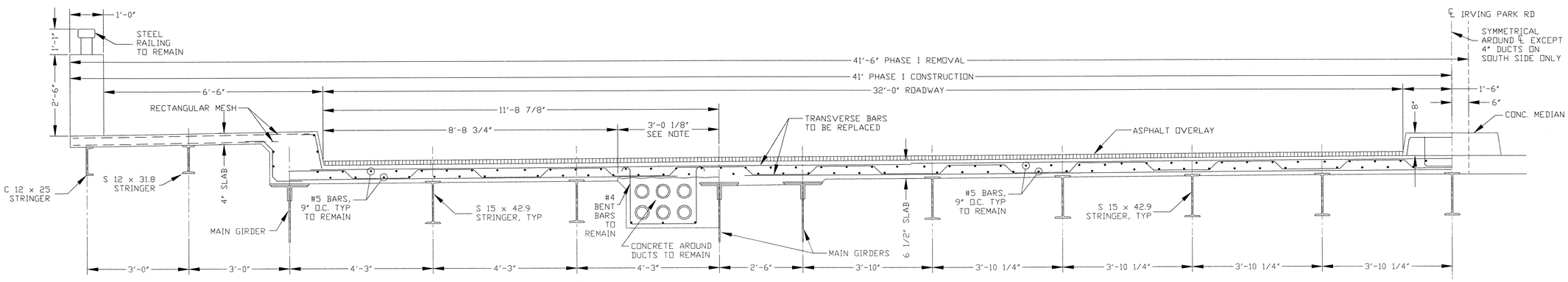

NOTE: USE LOW-IMPACT HAMMER TO REMOVE CONCRETE OVER 4" DUCTS

A / — TYPICAL EXISTING CROSS SECTION - SPAN
SCALE: 3/4" = 1'-0"

NO.	BY	DATE	DESCRIPTION
1	JEA	2/9/04	NEW FLOORBEAM AND DIAPHRAGM

REVISIONS

GENERAL PLAN AND CROSS SECTION

IRVING PARK ROAD BRIDGE EXPANSION JOINT REPAIRS

CITY OF CHICAGO
DEPARTMENT OF TRANSPORTATION
BUREAU OF BRIDGES AND TRANSIT

DRAWN	J.E.A.
CHECKED	R.U.R.
APPROVED	D.F.B.
DATE	7/08/02
SCALE	AS SHOWN
CONTRACT NO.	

SHEET NO. 2 of 11
PROJECT NO. E-1-051

1660820116

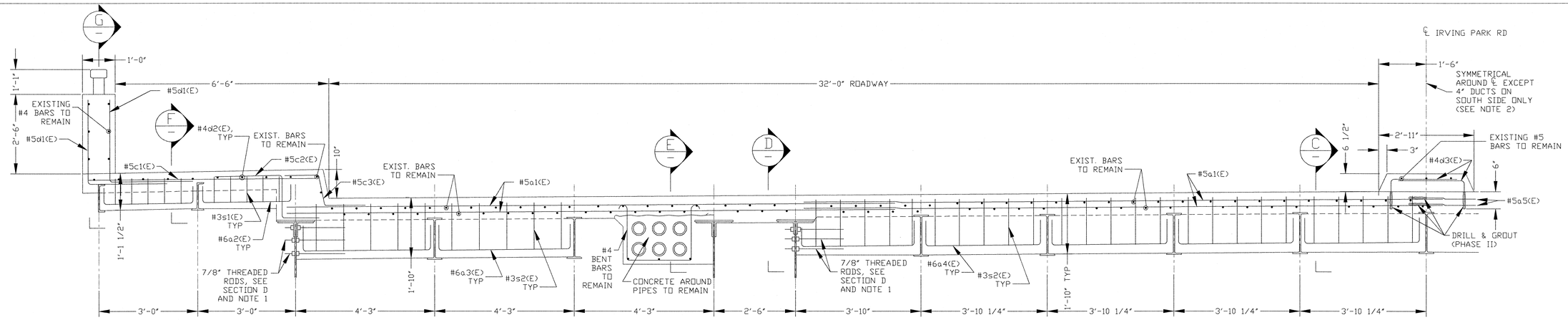

NOTES:

1. IMBED RODS 18" MINIMUM IN CONCRETE HAUNCH.
2. DUE TO THE 4" DUCTS BEING ON THE SOUTH SIDE ONLY, FOR EACH SPAN JOINT THERE IS AN EXTRA ROADWAY HAUNCH ON THE NORTH SIDE.

A — TYPICAL NEW CROSS SECTION - SPAN

SCALE: 3/4" = 1'-0"

* SAWCUT TO 3/4" DEPTH BELOW SURFACE OF CONCRETE DECK SLAB (TYP)

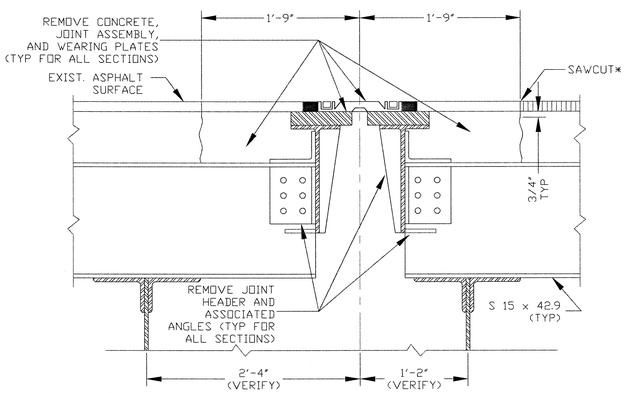

TYPICAL JOINT SECTION - EXISTING (SPAN)

SCALE: 1 1/2" = 1'-0"

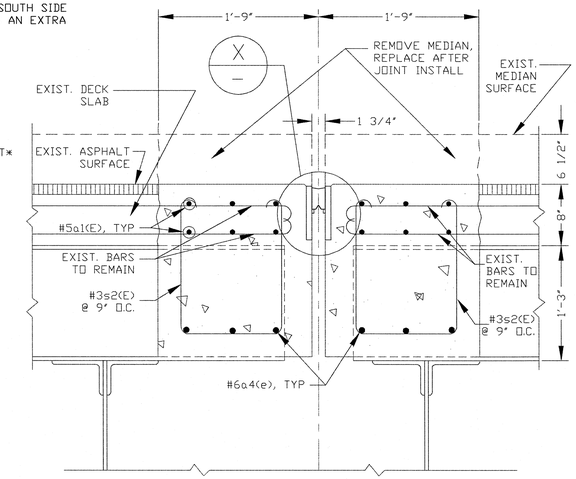

C — ROADWAY JOINT

SCALE: 1 1/2" = 1'-0"

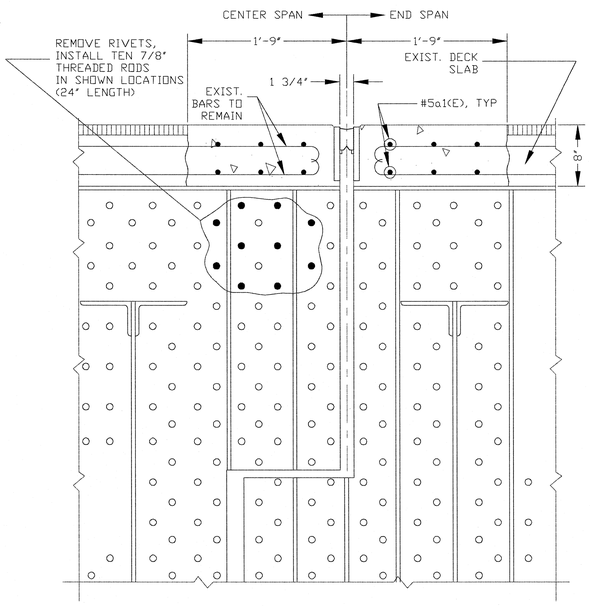

D — ROADWAY JOINT AT MAIN GIRDER

SCALE: 1 1/2" = 1'-0"

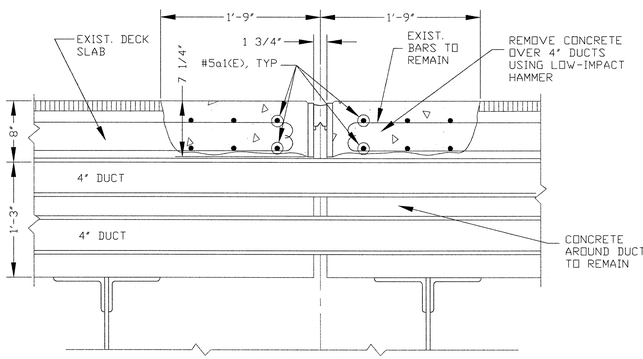

E — ROADWAY JOINT OVER 4" UTILITY DUCTS

SCALE: 1 1/2" = 1'-0"

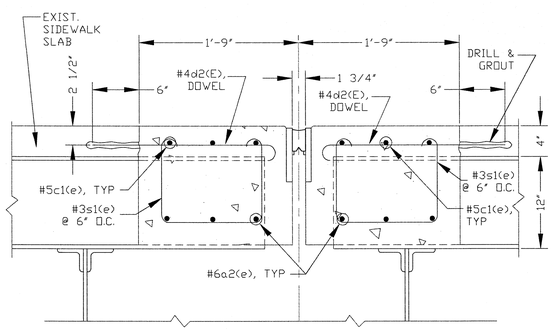

F — SIDEWALK JOINT

SCALE: 1 1/2" = 1'-0"

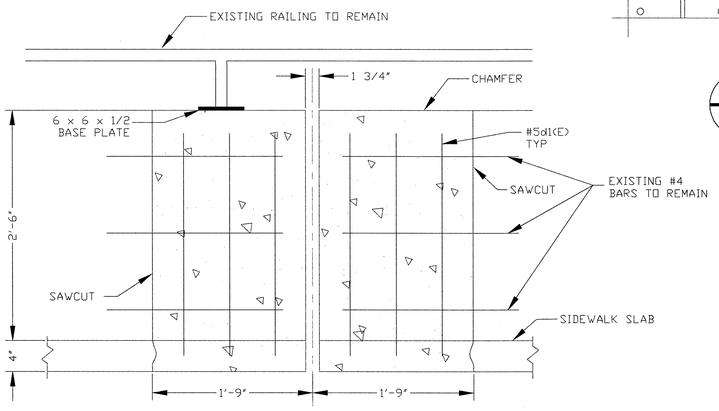

G — PARAPET WALL

SCALE: 1 1/2" = 1'-0"

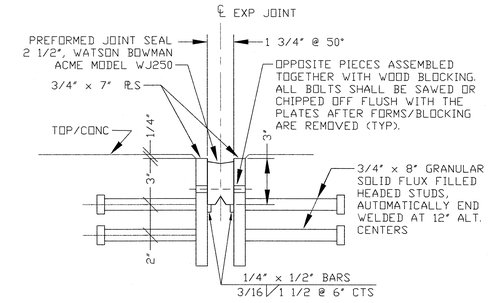

X — DETAIL

SCALE: 3" = 1'-0"

NO.	BY	DATE	DESCRIPTION
1	JEA	10/11/00	UTILITY LINES

REVISIONS

SPAN JOINTS SECTIONS AND DETAILS

IRVING PARK ROAD BRIDGE EXPANSION JOINT REPAIRS

CITY OF CHICAGO

DEPARTMENT OF TRANSPORTATION
BUREAU OF BRIDGES AND TRANSIT

DRAWN	J.E.A.
CHECKED	R.U.R.
APPROVED	D.F.B.
DATE	7/08/02
SCALE	AS SHOWN
CONTRACT NO.	

SHEET NO. 3 of 11

PROJECT NO. E-1-051

1660820117

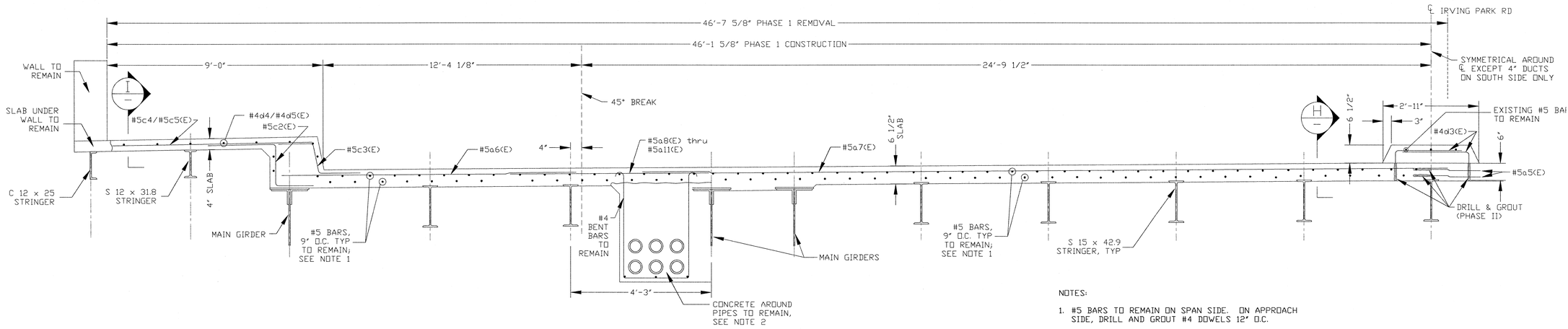

NOTES:

1. #5 BARS TO REMAIN ON SPAN SIDE. ON APPROACH SIDE, DRILL AND GROUT #4 DOWELS 12" O.C.
2. USE LOW-IMPACT HAMMER TO REMOVE CONCRETE OVER 4" DUCTS

B / 2 TYPICAL NEW CROSS SECTION - ABUTMENT

SCALE: 3/4" = 1'-0"

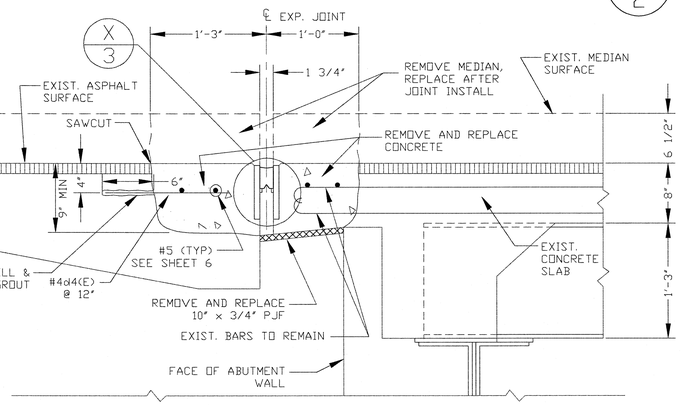

H / — ROADWAY JOINT

SCALE: 1 1/2" = 1'-0"

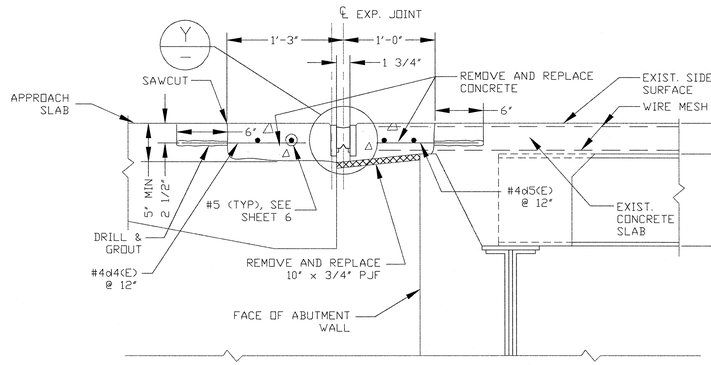

I / — SIDEWALK JOINT

SCALE: 1 1/2" = 1'-0"

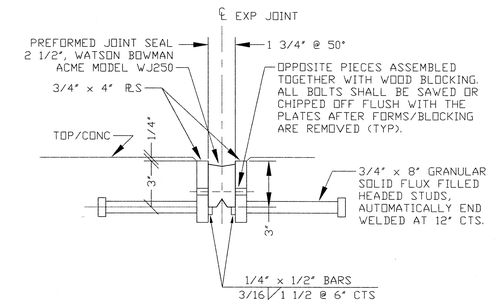

Y / — DETAIL

SCALE: 3" = 1'-0"

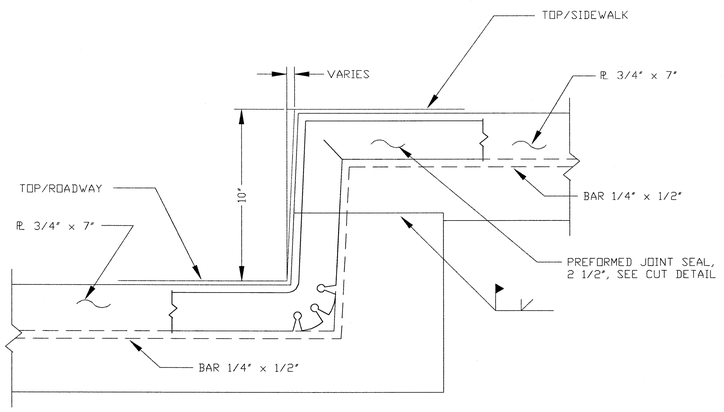

SECTION THROUGH CURB - SPAN

SCALE: 3" = 1'-0"

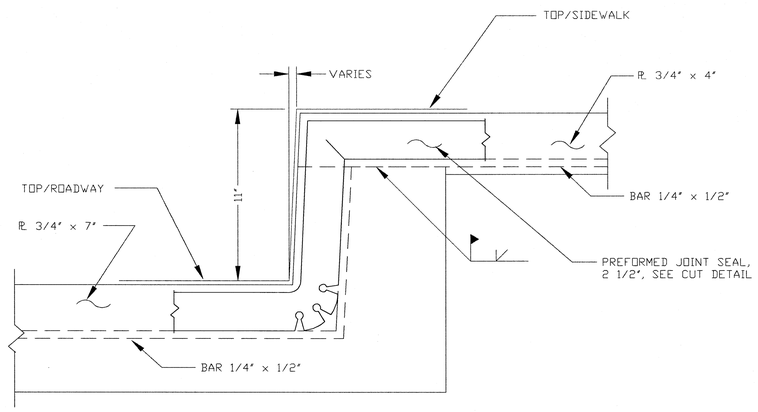

SECTION THROUGH CURB - ABUTMENT

SCALE: 3" = 1'-0"

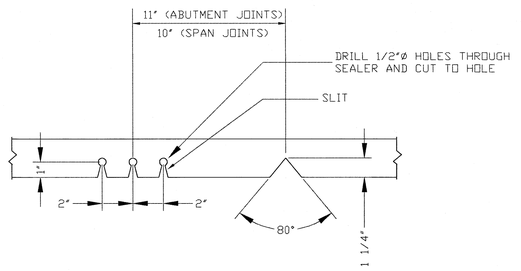

SEALER CUT-OUT AT CURB

SCALE: 3" = 1'-0"

NO.	BY	DATE	DESCRIPTION

REVISIONS

ABUTMENTS JOINTS SECTIONS AND DETAILS

IRVING PARK OVER THE NORTH BRANCH OF THE CHICAGO RIVER EXPANSION JOINT REPAIRS

CITY OF CHICAGO

DEPARTMENT OF TRANSPORTATION
BUREAU OF BRIDGES AND TRANSIT

DRAWN	J.E.A.
CHECKED	R.U.R.
APPROVED	D.F.B.
DATE	7/08/02
SCALE	AS SHOWN
CONTRACT NO.	

SHEET NO. 4 of 11

PROJECT NO. E-1-051

1660820118

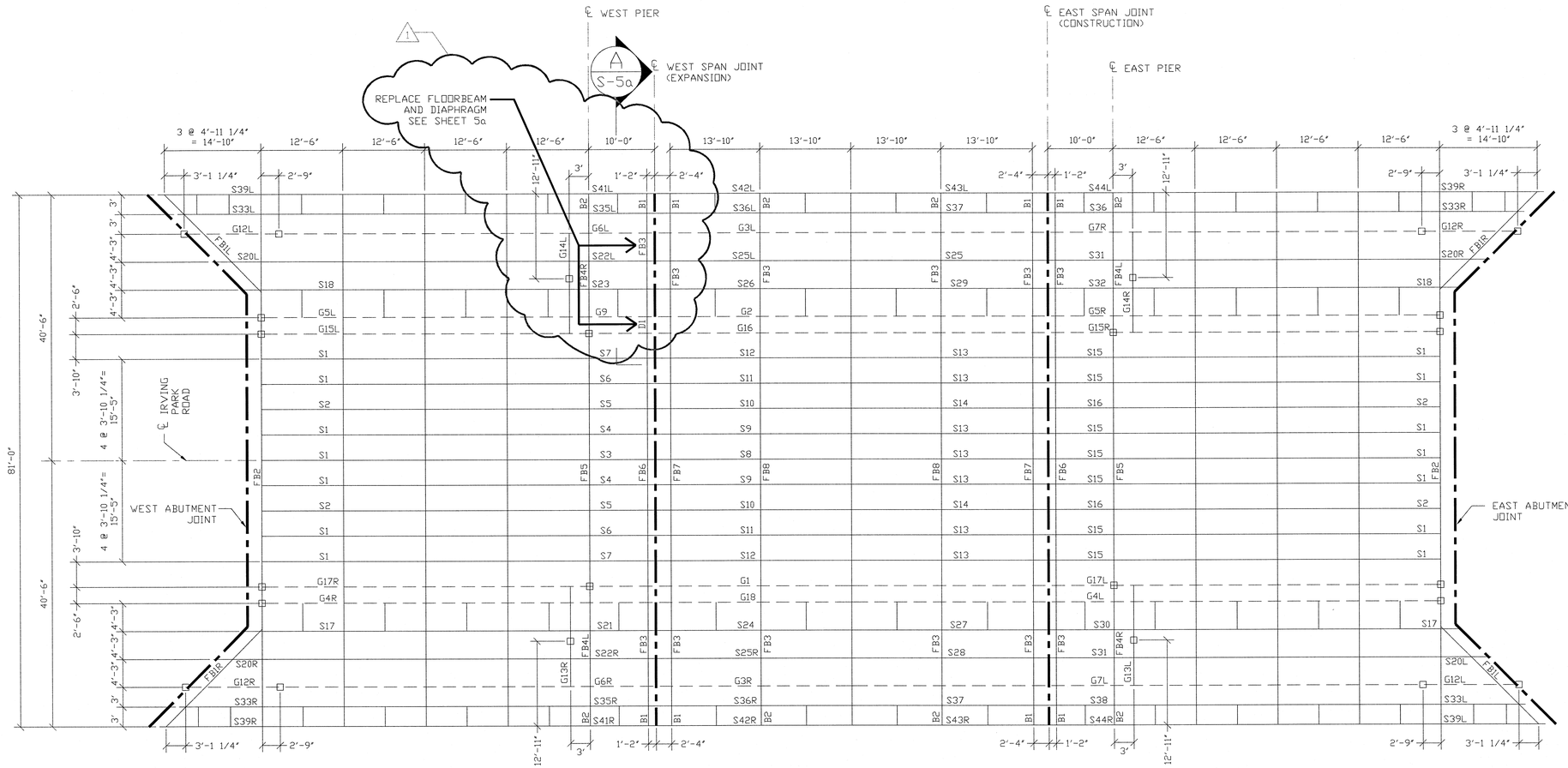

□ BEARING

FRAMING PLAN
1/8" = 1'-0"

MARK	TYPE	BEAM DEPTH	FLANGE WIDTH
S1 THRU S32	S 15 x 42.9	1'-3"	0'-5 1/2"
S33 THRU S38	S 12 x 31.8	1'-0"	0'-5"
S39 THRU S44	C 12 x 25	1'-0"	0'-3"
FB1	W 18 x 55	1'-6"	0'-7 1/2"
FB2	BUILT UP	4'-9"	1'-2"
FB3	W 18 x 55	1'-6"	0'-7 1/2"
FB4	W 18 x 55	1'-6"	0'-7 1/2"
FB5	BUILT UP	4'-9"	1'-2"
FB6	BUILT UP	4'-9"	1'-2"
FB7	BUILT UP	4'-9"	1'-2"
FB8	BUILT UP	4'-9"	1'-2"
B1 & B2	BUILT UP (SEE DETAIL)	RANGES FROM 2'-8 1/4" TO 0'-9 1/2"	0'-7 3/8"
G1	BUILT UP	6'-0"	1'-0" 1/2"
G2	BUILT UP	6'-0"	1'-0" 1/2"
G3	BUILT UP	6'-0"	1'-0" 1/2"
G4	BUILT UP	6'-0"	0'-9 1/2"
G5	BUILT UP	6'-0"	0'-9 1/2"
G6	BUILT UP	6'-0"	0'-9 1/2"
G7	BUILT UP	6'-0"	0'-9 1/2"
G12	BUILT UP	6'-0"	0'-9"
G13	BUILT UP	4'-6"	1'-6"
G14	BUILT UP	4'-6"	1'-6"
G17	BUILT UP	6'-0"	1'-2"
G18	BUILT UP	6'-0"	1'-2"

PROPERTY TABLE

THIS SHEET IS FOR INFORMATIONAL PURPOSES ONLY

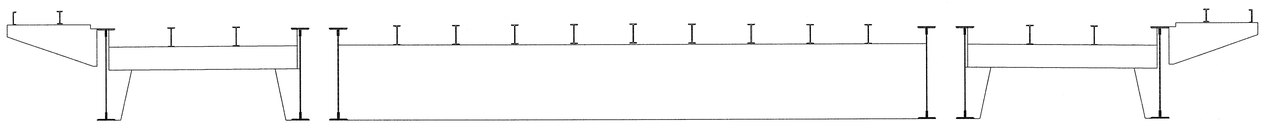

TYPICAL SECTION

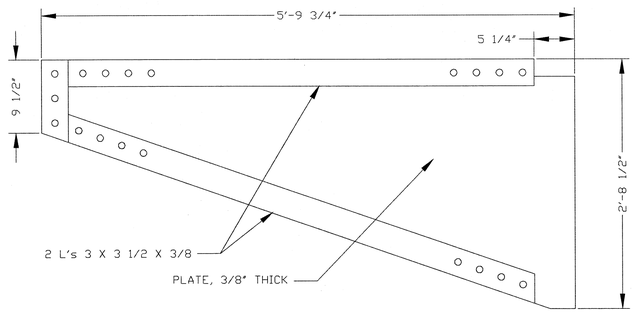

BEAM B1/B2
SCALE: 1 1/2" = 1'-0"

NO.	BY	DATE	DESCRIPTION
1	JEA	2/9/04	NEW FLOORBEAM AND DIAPHRAGM

REVISIONS

EXISTING FRAMING PLAN

IRVING PARK OVER THE NORTH BRANCH OF THE CHICAGO RIVER EXPANSION JOINT REPAIRS

CITY OF CHICAGO

DEPARTMENT OF TRANSPORTATION
BUREAU OF BRIDGES AND TRANSIT

DRAWN	J.E.A.
CHECKED	R.U.R.
APPROVED	D.F.B.
DATE	7/08/02
SCALE	AS SHOWN
CONTRACT NO.	

SHEET NO. 5 of 11

PROJECT NO. E-1-051

1660820119

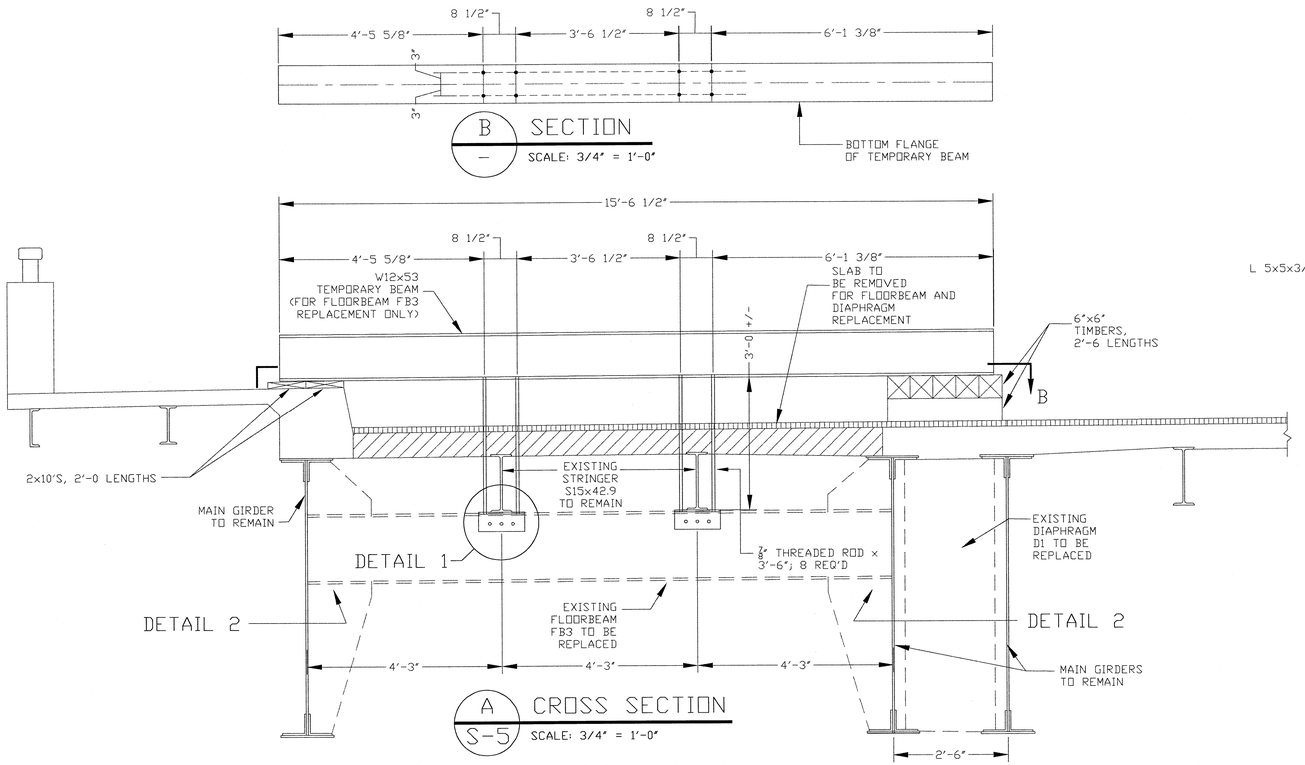

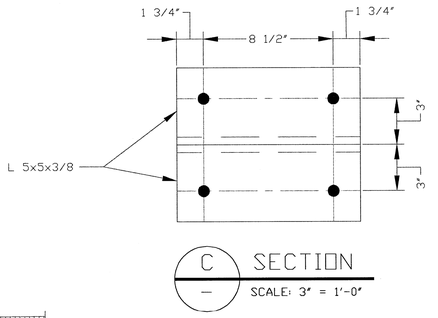

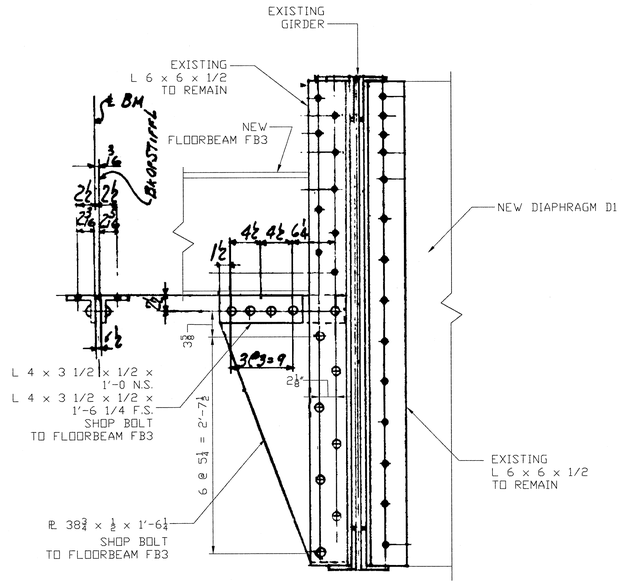

DETAIL 2
(OPP HAND OTHER SIDE OF FB3)

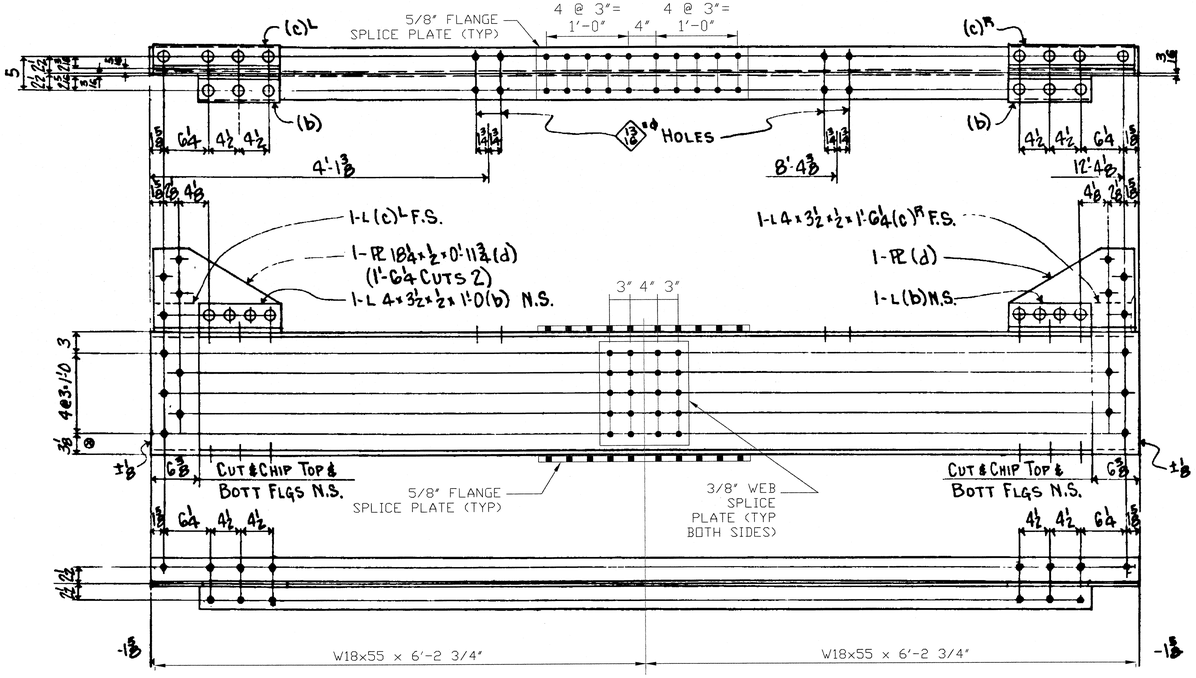

FLOOR BEAM FB3

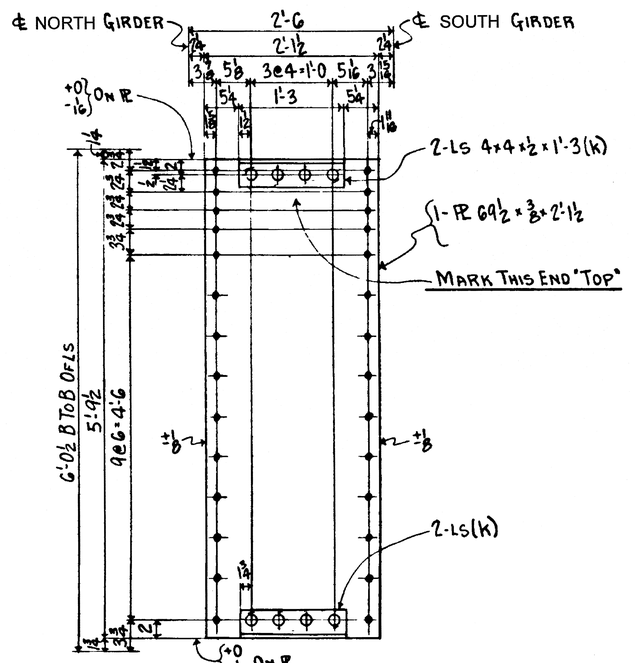

DIAPHRAGM D1

NOTES:

1. TEMPORARY STEEL, TO INCLUDE BEAM, ANGLE SUPPORTS, AND THREADED RODS, ARE TO BE UNPAINTED.
2. FLOORBEAM FB3 AND DIAPHRAGM D1 ARE TO BE PAINTED WITH ONE COAT OF PRIMER.
3. ALL STEEL TO BE GRADE A36.
4. ALL STEEL TO BE PROVIDED BY THE CITY.

NO.	BY	DATE	DESCRIPTION

REVISIONS

FLOORBEAM AND DIAPHRAGM REPLACEMENT

IRVING PARK ROAD BRIDGE EXPANSION JOINT REPAIRS

CITY OF CHICAGO

DEPARTMENT OF TRANSPORTATION
BUREAU OF BRIDGES AND TRANSIT

DRAWN J.E.A.	SHEET NO.
CHECKED	5a of 11
APPROVED D.F.B.	
DATE 2/4/04	
SCALE AS SHOWN	
CONTRACT NO.	PROJECT NO. E-1-051

1660820120

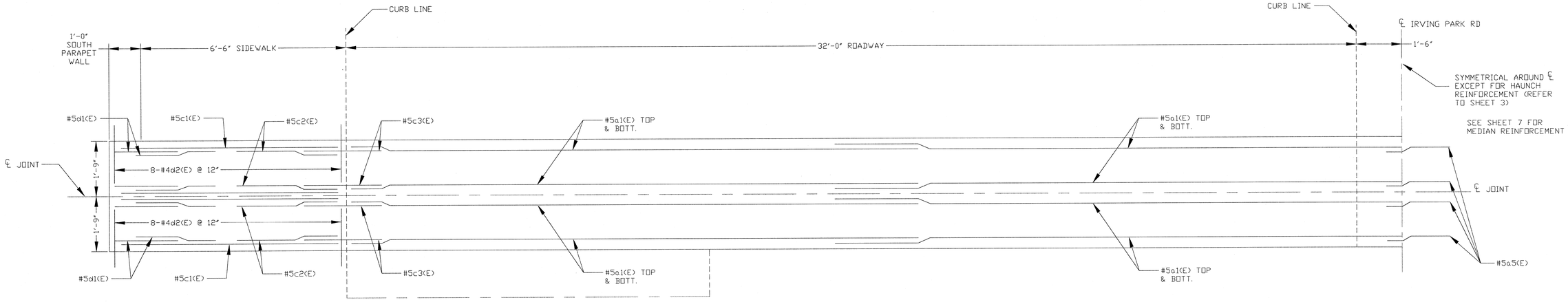

REINFORCEMENT PLAN - SPAN JOINTS

SCALE: 3/4" = 1'-0"

NOTE: HAUNCH REINFORCEMENT NOT SHOWN. REFER TO SHEET 3 FOR HAUNCH REINFORCEMENT.

REINFORCEMENT BAR SCHEDULE

BAR	NO.	SIZE	LENGTH	SHAPE
a1(E)	96	#5	19'-0"	
a2(E)	48	#6	3'-8"	
a3(E)	60	#6	5'-4"	
a4(E)	120	#6	4'-9"	
a5(E)	32	#5	2'-0"	
a6(E)	16	#5	11'-0"	
a7(E)	16	#5	22'-0"	
a8(E)	16	#5	6'-10"	
c1(E)	24	#5	6'-8"	
c2(E)	40	#5	5'-3"	
c3(E)	40	#5	3'-9"	
c4(E)	12	#5	8'-4"	
c5(E)	4	#5	7'-6"	

BAR	NO.	SIZE	LENGTH	SHAPE
d1(E)	48	#5	5'-0"	
d2(E)	64	#4	2'-2"	
d3(E)	36	#4	2'-9"	
d4(E)	308	#4	1'-5"	
d5(E)	32	#4	1'-2"	
s1(E)	80	#3	3'-10"	
s2(E)	300	#3	5'-0"	
THREADED ROD*	80	7/8"	2'-0"	

* INCLUDE 2 NUTS AND 2 WASHERS PER ROD

ALL REBAR SHALL BE EPOXY COATED GRADE 60.
TOTAL WEIGHT: 6600 lbs

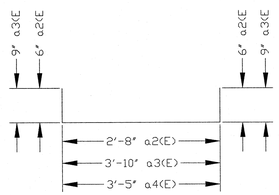

BAR DETAIL a2 THRU a4

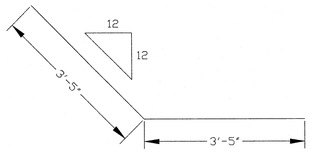

BAR DETAIL - a8

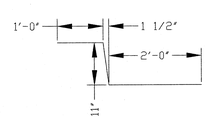

BAR DETAIL - c2

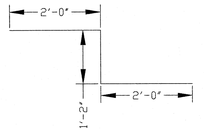

BAR DETAIL - c3

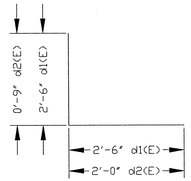

BAR DETAIL - d1 & d3

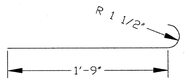

BAR DETAIL - d2

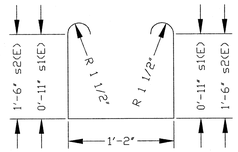

BAR DETAIL - s1 & s2

NO.	BY	DATE	DESCRIPTION

REVISIONS

REINFORCEMENT PLAN SPAN

IRVING PARK ROAD BRIDGE EXPANSION JOINT REPAIRS

CITY OF CHICAGO

DEPARTMENT OF TRANSPORTATION
BUREAU OF BRIDGES AND TRANSIT

DRAWN	J.E.A.
CHECKED	R.U.R.
APPROVED	D.F.B.
DATE	7/08/02
SCALE	AS SHOWN
CONTRACT NO.	

SHEET NO. 6 of 11

PROJECT NO. E-1-051

1660820121

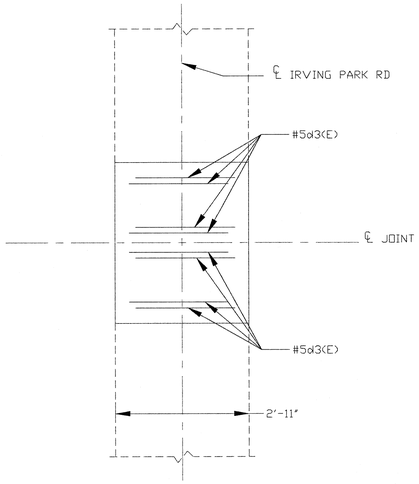

REINFORCEMENT PLAN - MEDIAN

SCALE: 3/4" = 1'-0"

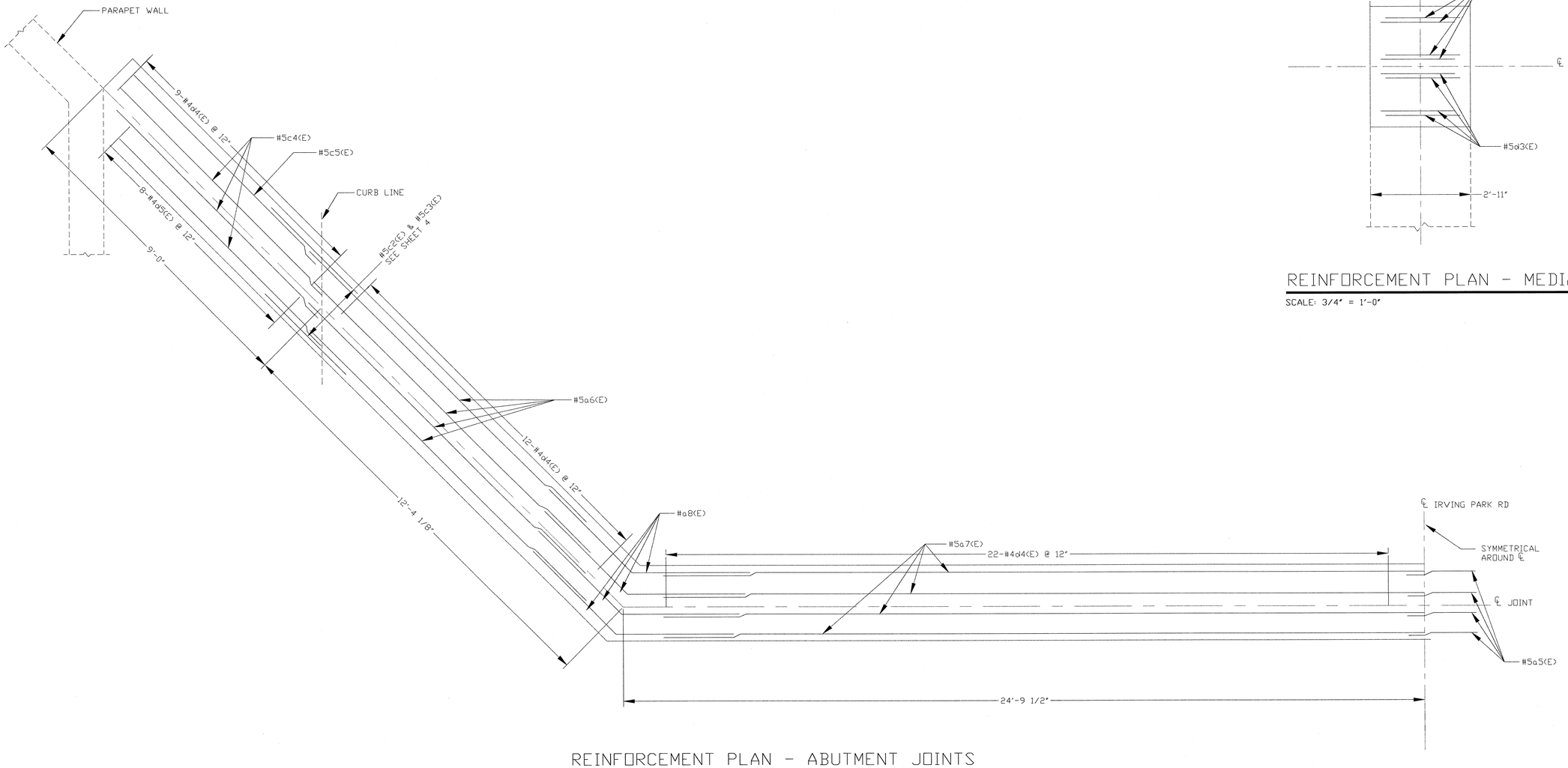

REINFORCEMENT PLAN - ABUTMENT JOINTS

SCALE: 3/4" = 1'-0"

NO.	BY	DATE	DESCRIPTION

REVISIONS

REINFORCEMENT PLAN
ABUTMENTS

IRVING PARK ROAD
BRIDGE EXPANSION
JOINT REPAIRS

CITY OF CHICAGO

DEPARTMENT OF TRANSPORTATION
BUREAU OF BRIDGES AND TRANSIT

DRAWN	J.E.A.
CHECKED	R.U.R.
APPROVED	D.F.B.
DATE	7/08/02
SCALE	AS SHOWN
CONTRACT NO.	

SHEET NO. 7 of 11

PROJECT NO. E-1-051

1660820122

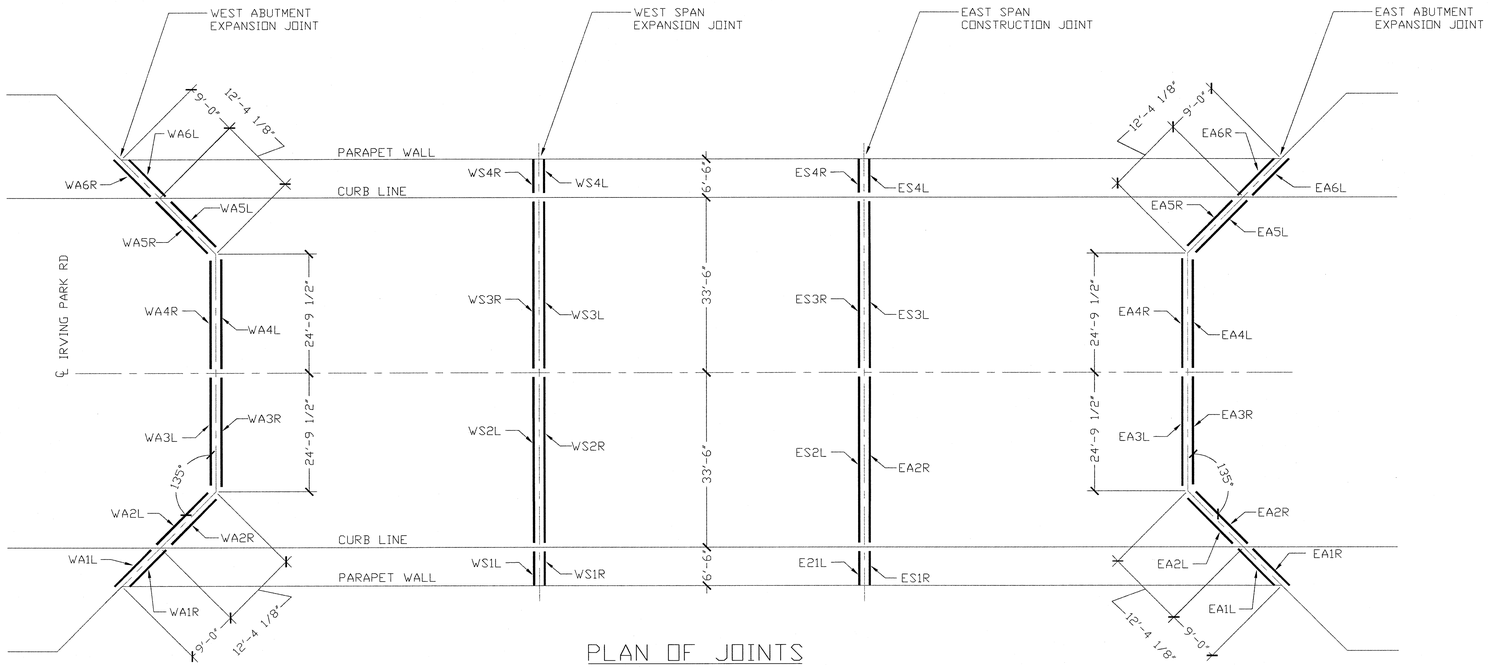

PLAN OF JOINTS

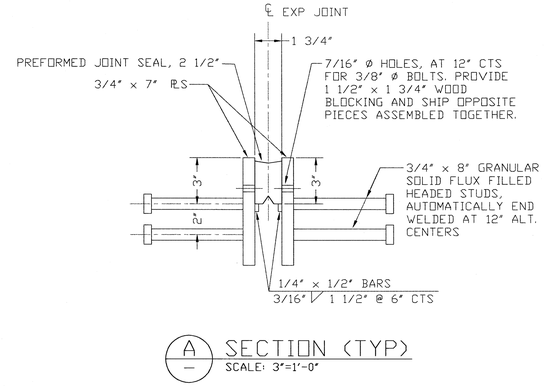

A — SECTION (TYP)
SCALE: 3"=1'-0"

NOTES:

1. ALL MATERIALS AND CONSTRUCTION METHODS USED ON THIS PROJECT SHALL CONFORM TO THE STANDARD SPECIFICATION FOR ROAD AND BRIDGE CONSTRUCTION ADOPTED JANUARY 1, 1997 BY THE ILLINOIS DEPARTMENT OF TRANSPORTATION.
2. THE STRUCTURAL STEEL SHALL CONFORM TO AASHTO DESIGNATION M270 (ASTM A709) GRADE 36 OR 50.
3. ALL STEEL SHALL BE BLASTED TO SP-10 AND SHOP PRIMED WITH INORGANIC ZINC SILICATE.
4. BEVELS SHALL BE PROVIDED FOR FIELD-3/8" GROOVE WELDS. (OUTSIDE FACE).

TOTAL WEIGHT = 13,800 LBS

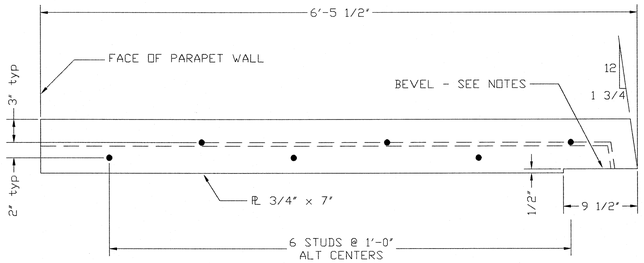

WS1R / ES1R AS SHOWN
WS1L / ES1L OPP HAND

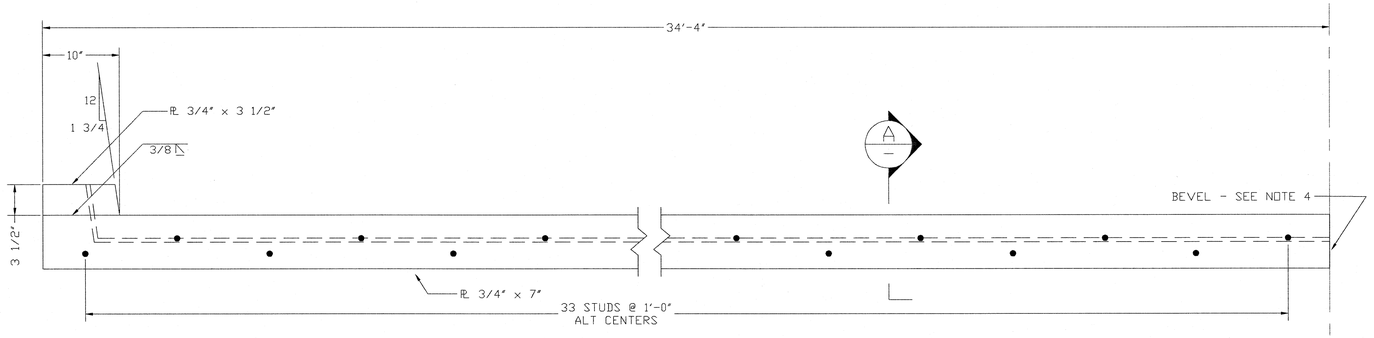

WS2R / ES2R AS SHOWN
WS2L / ES2L OPP HAND

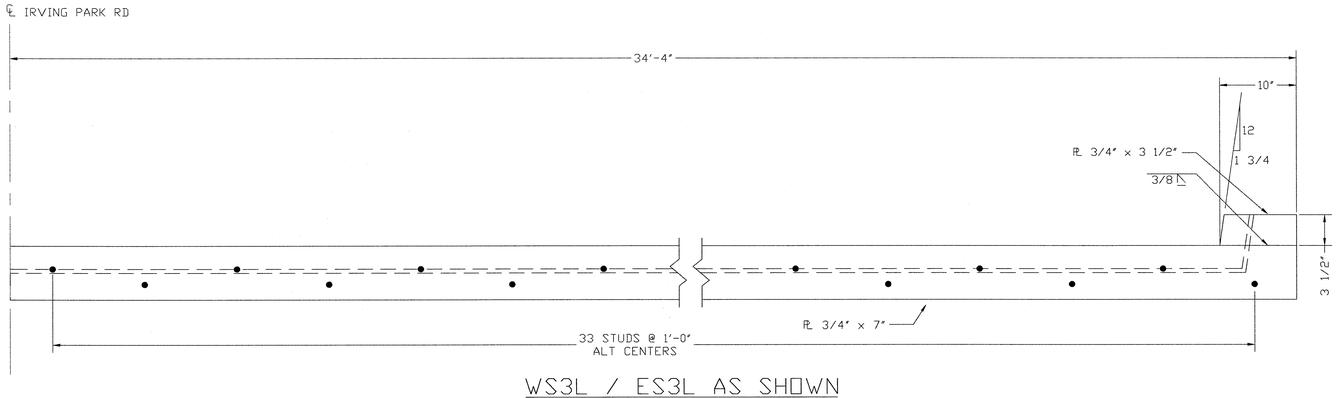

WS3L / ES3L AS SHOWN
WS3R / ES3R OPP HAND

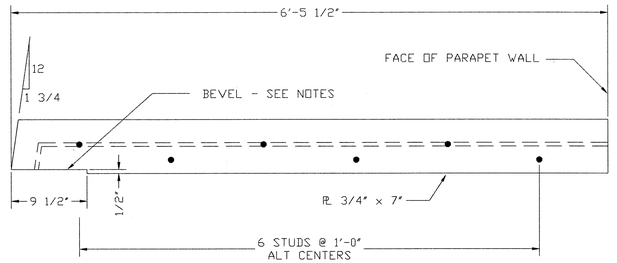

WS4L / ES4L AS SHOWN
WS4R / ES4R OPP HAND

NO.	BY	DATE	DESCRIPTION

REVISIONS

EXPANSION PLATES SPAN

IRVING PARK ROAD BRIDGE EXPANSION JOINT REPAIRS

CITY OF CHICAGO

DEPARTMENT OF TRANSPORTATION
BUREAU OF BRIDGES AND TRANSIT

DRAWN	J.E.A.
CHECKED	R.U.R.
APPROVED	D.F.B.
DATE	7/08/02
SCALE	AS SHOWN
CONTRACT NO.	

SHEET NO. 8 of 11

PROJECT NO. E-1-051

1660820123

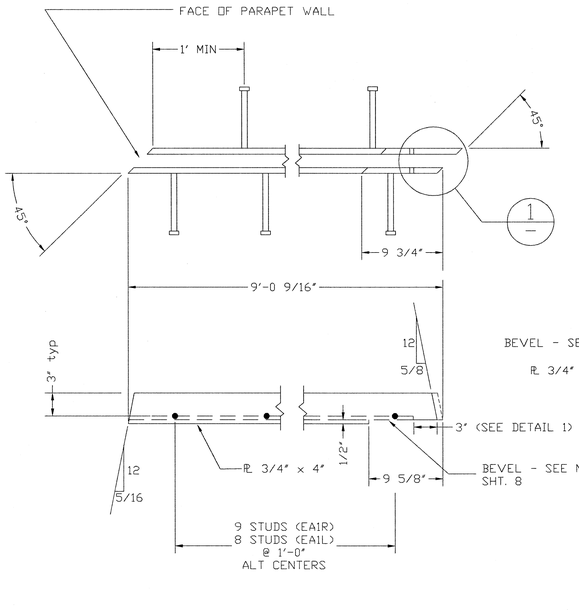

EA1R AS SHOWN
EA1L OPP. HAND

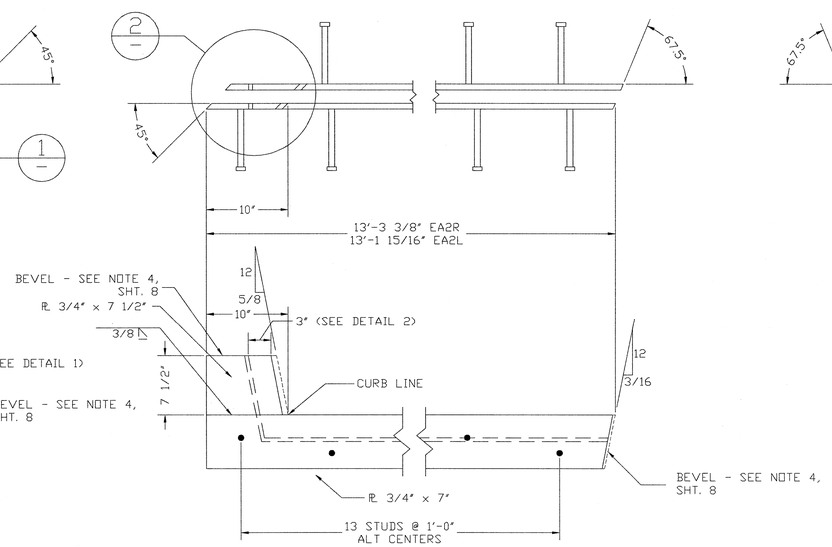

EA2R AS SHOWN
EA2L OPP. HAND

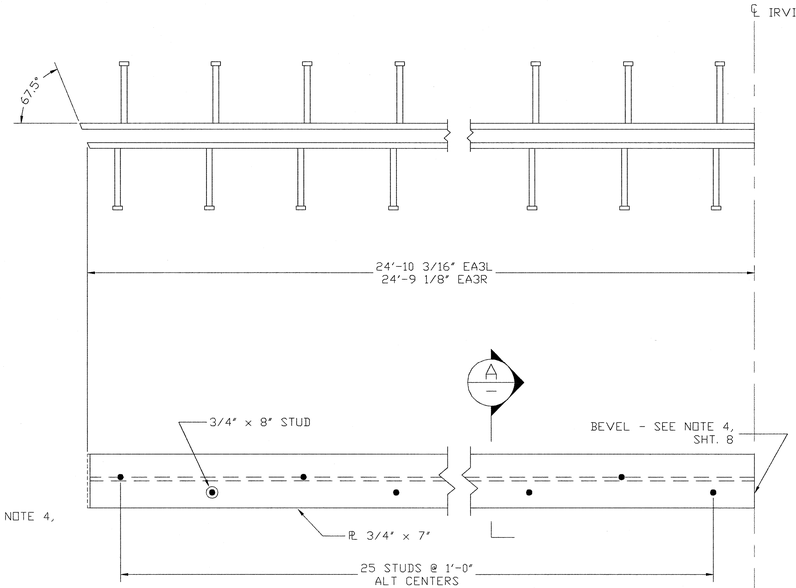

EA3R AS SHOWN
EA3L OPP. HAND

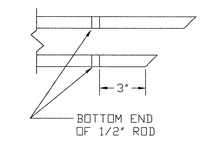

DETAIL 1 AS SHOWN
DETAIL 3 OPP. HAND

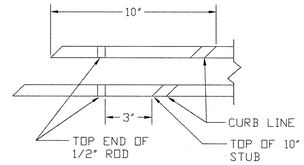

DETAIL 2 AS SHOWN
DETAIL 4 OPP. HAND

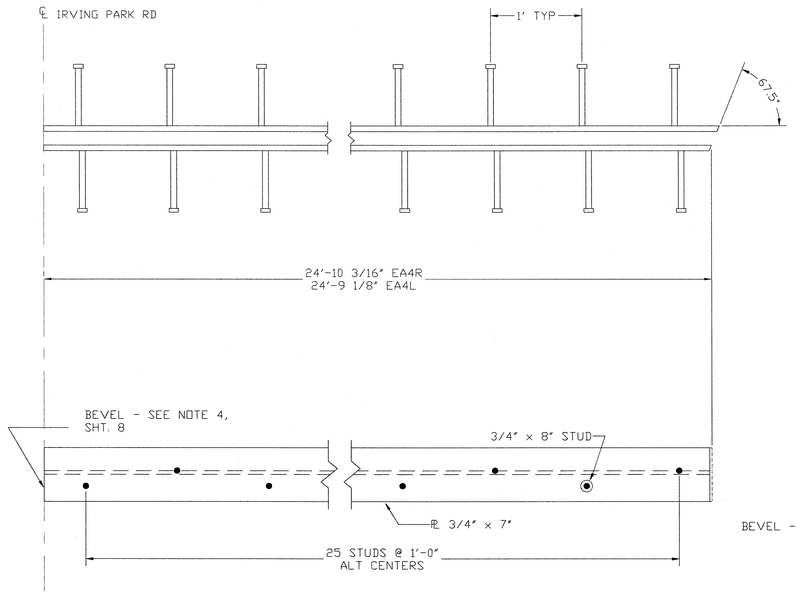

EA4L AS SHOWN
EA4R OPP. HAND

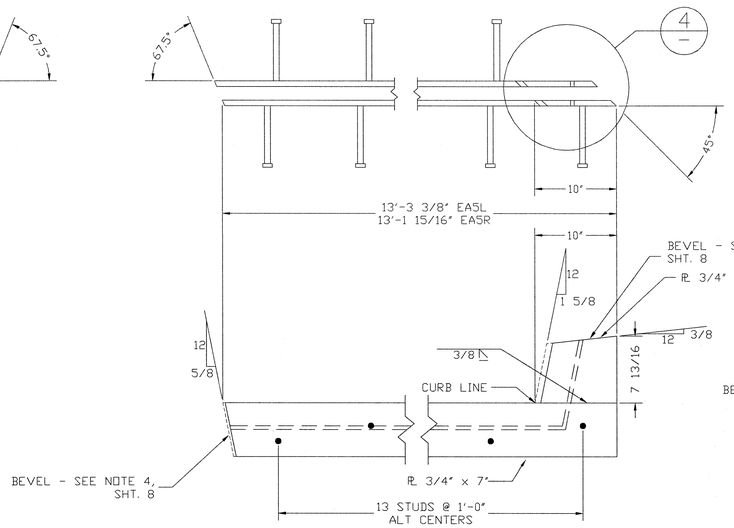

EA5L AS SHOWN
EA5R OPP. HAND

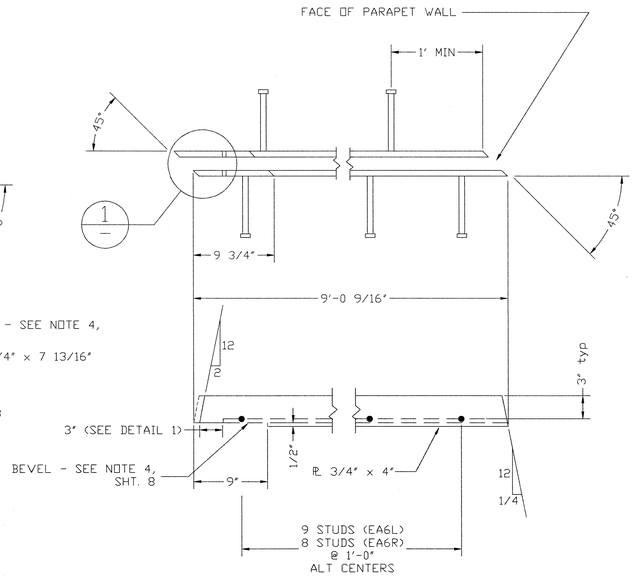

EA6L AS SHOWN
EA6R OPP. HAND

NO.	BY	DATE	DESCRIPTION

REVISIONS

EXPANSION PLATES ABUTMENTS

IRVING PARK ROAD BRIDGE EXPANSION JOINT REPAIRS

CITY OF CHICAGO

DEPARTMENT OF TRANSPORTATION
BUREAU OF BRIDGES AND TRANSIT

DRAWN	J.E.A.
CHECKED	R.U.R.
APPROVED	D.F.B.
DATE	7/08/02
SCALE	AS SHOWN
CONTRACT NO.	

SHEET NO. 9 of 11

PROJECT NO. E-1-051

1660820124

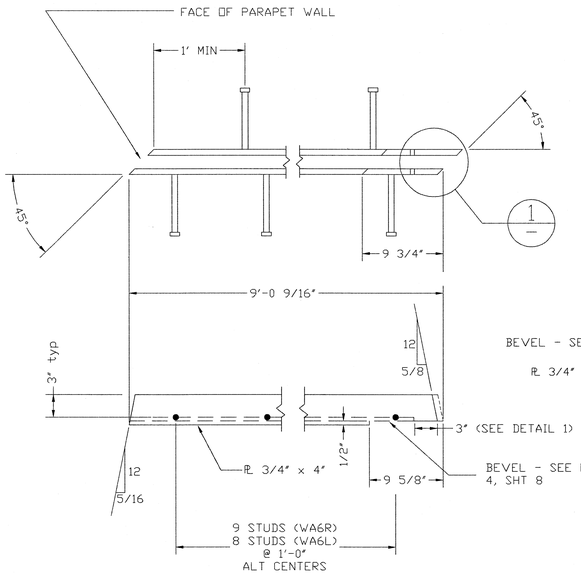

WA6R AS SHOWN
WA6L OPP. HAND

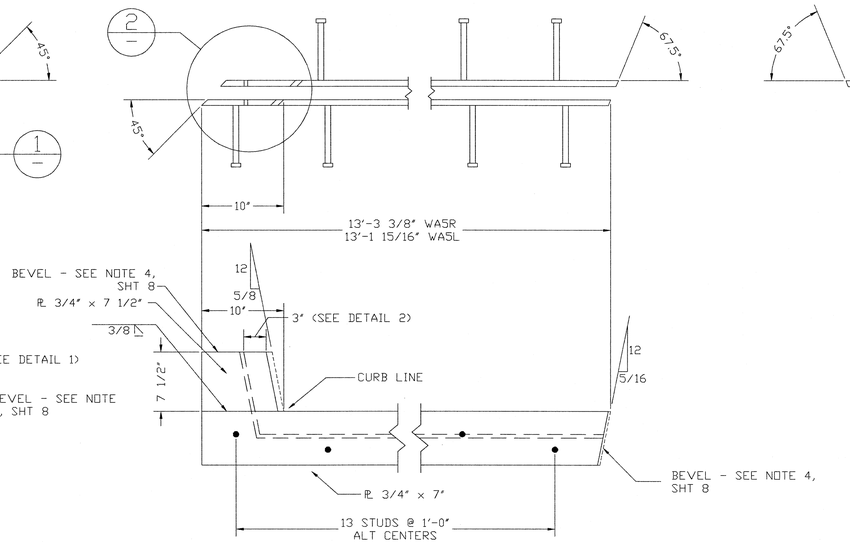

WA5R AS SHOWN
WA5L OPP. HAND

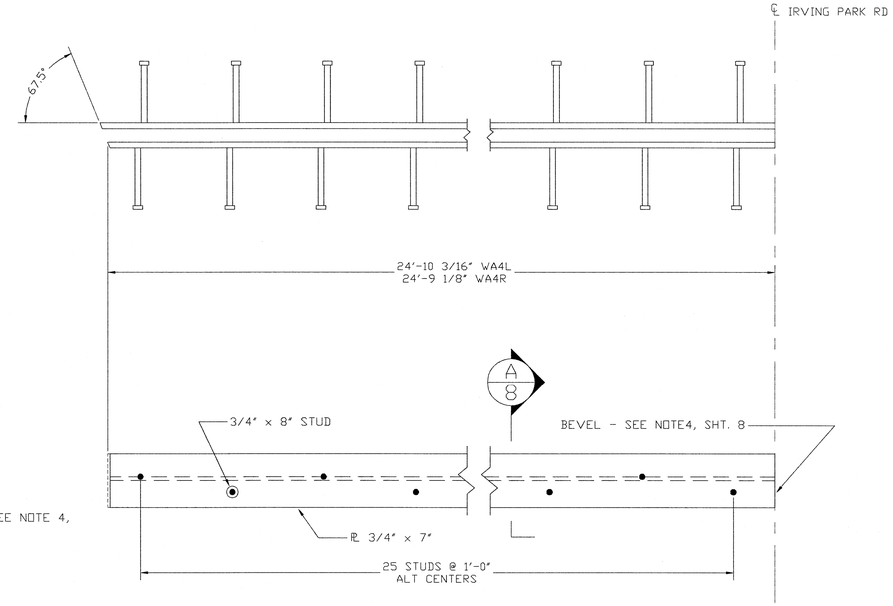

WA4R AS SHOWN
WA4L OPP. HAND

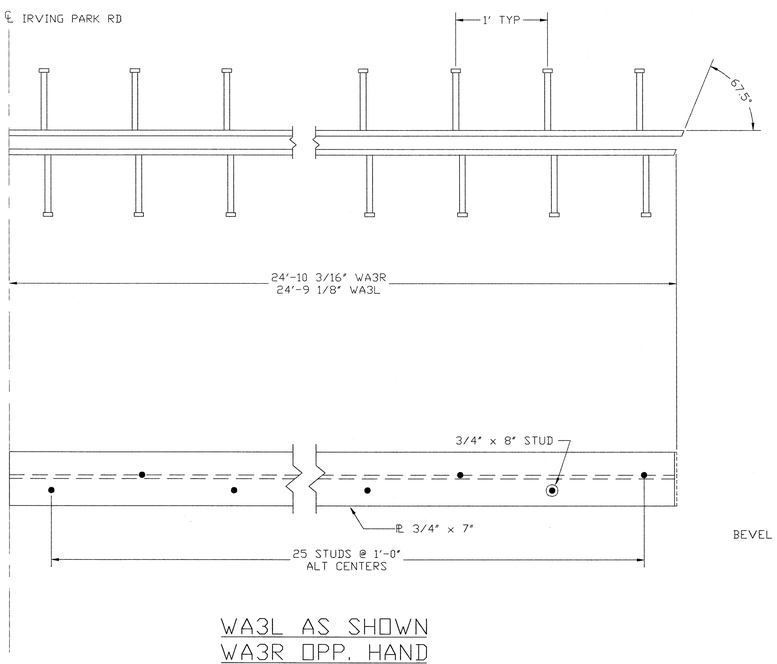

WA3L AS SHOWN
WA3R OPP. HAND

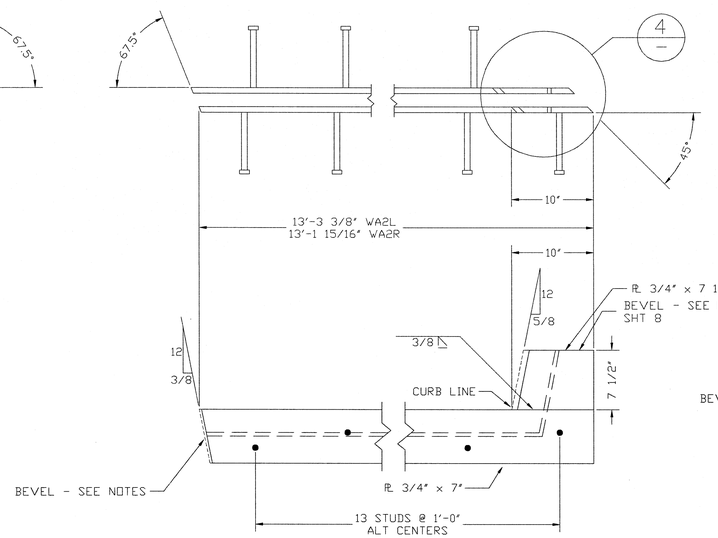

WA2L AS SHOWN
WA2R OPP. HAND

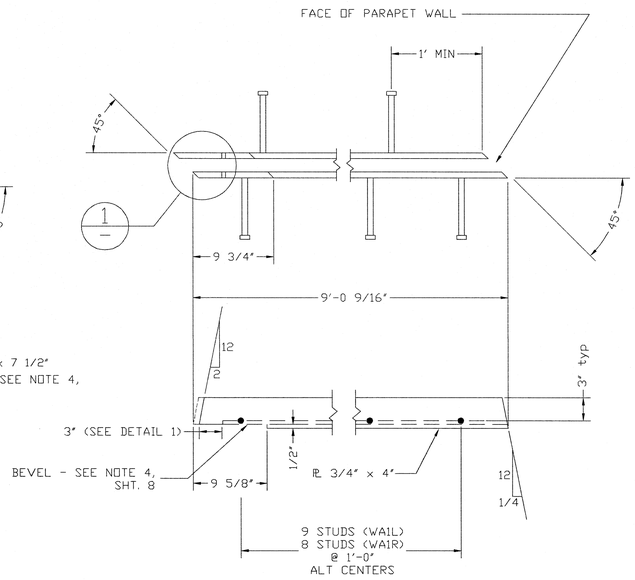

WA1L AS SHOWN
WA1R OPP. HAND

NO.	BY	DATE	DESCRIPTION

REVISIONS

EXPANSION PLATES ABUTMENTS

IRVING PARK ROAD BRIDGE EXPANSION JOINT REPAIRS

CITY OF CHICAGO

DEPARTMENT OF TRANSPORTATION
BUREAU OF BRIDGES AND TRANSIT

DRAWN	J.E.A.
CHECKED	R.U.R.
APPROVED	D.F.B.
DATE	7/08/02
SCALE	AS SHOWN
CONTRACT NO.	

SHEET NO. 10 of 11

PROJECT NO. E-1-051

1660820125

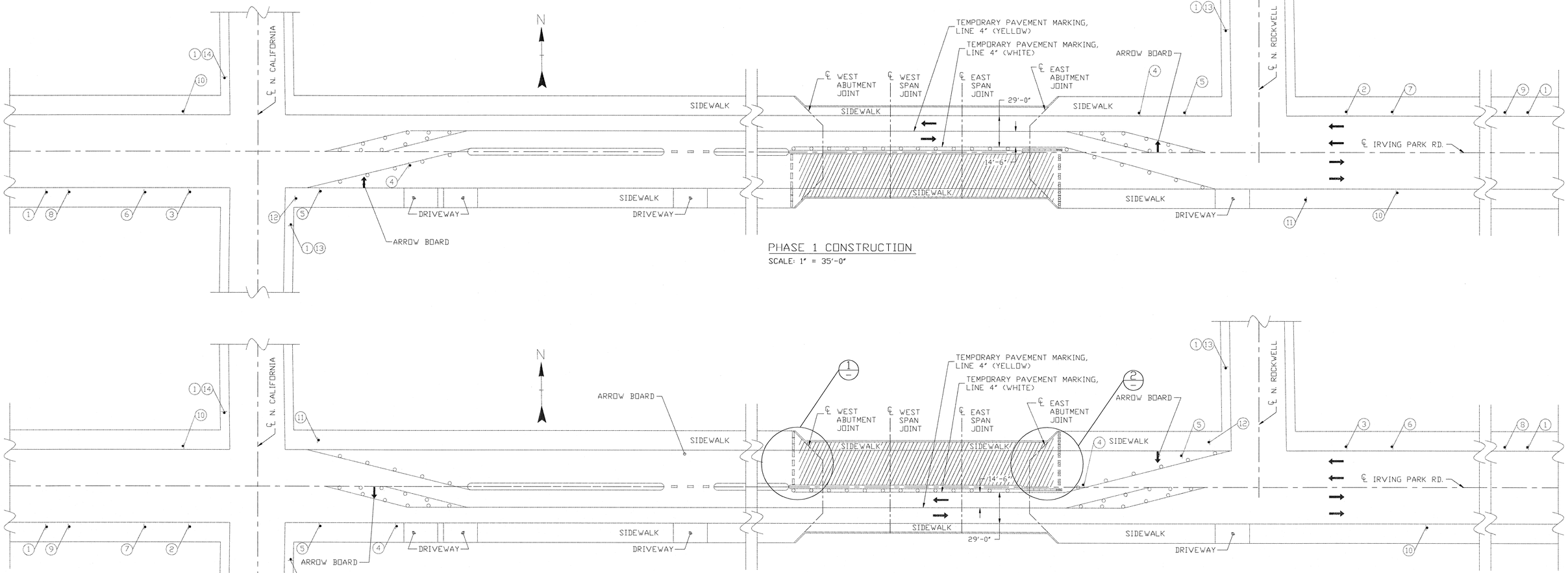

PHASE I CONSTRUCTION
SCALE: 1" = 35'-0"

PHASE II CONSTRUCTION
SCALE: 1" = 35'-0"

SIGN SCHEDULE:

①	ROAD WORK AHEAD	⑥		⑪	SIDEWALK CLOSED → USE OTHER SIDE
②	KEEP RIGHT	⑦		⑫	SIDEWALK CLOSED ← USE OTHER SIDE
③	KEEP LEFT	⑧	RIGHT LANE CLOSED AHEAD	⑬	→
④		⑨	LEFT LANE CLOSED AHEAD	⑭	←
⑤	SPEED LIMIT 15 MPH	⑩	END ROAD WORK		

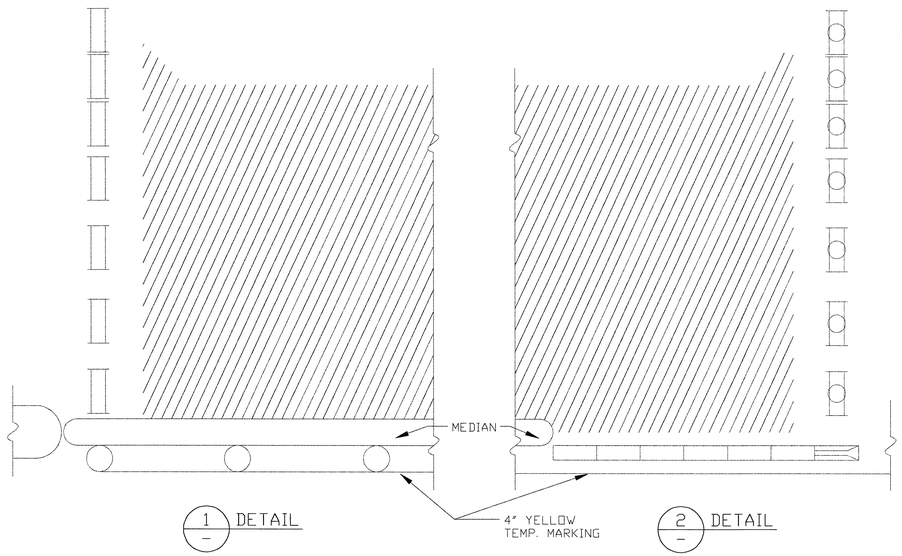

1/– DETAIL

2/– DETAIL

LEGEND:

- BARRICADE @ 25'-0" WITH STEADY BURNING LIGHT
- TYPE III BARRICADES WITH FLASHING LIGHTS
- TYPE III BARRICADES
- TEMPORARY CONCRETE BARRIER WITH ONE END SECTION
- WORK AREA

NO.	BY	DATE	DESCRIPTION

REVISIONS

TRAFFIC PHASING

IRVING PARK ROAD BRIDGE EXPANSION JOINT REPAIRS

CITY OF CHICAGO
DEPARTMENT OF TRANSPORTATION
BUREAU OF BRIDGES AND TRANSIT

DRAWN	J.E.A.
CHECKED	R.U.R.
APPROVED	D.F.B.
DATE	7/08/02
SCALE	AS SHOWN
CONTRACT NO.	

SHEET NO. 11 of 11

PROJECT NO. E-1-051

1660820126

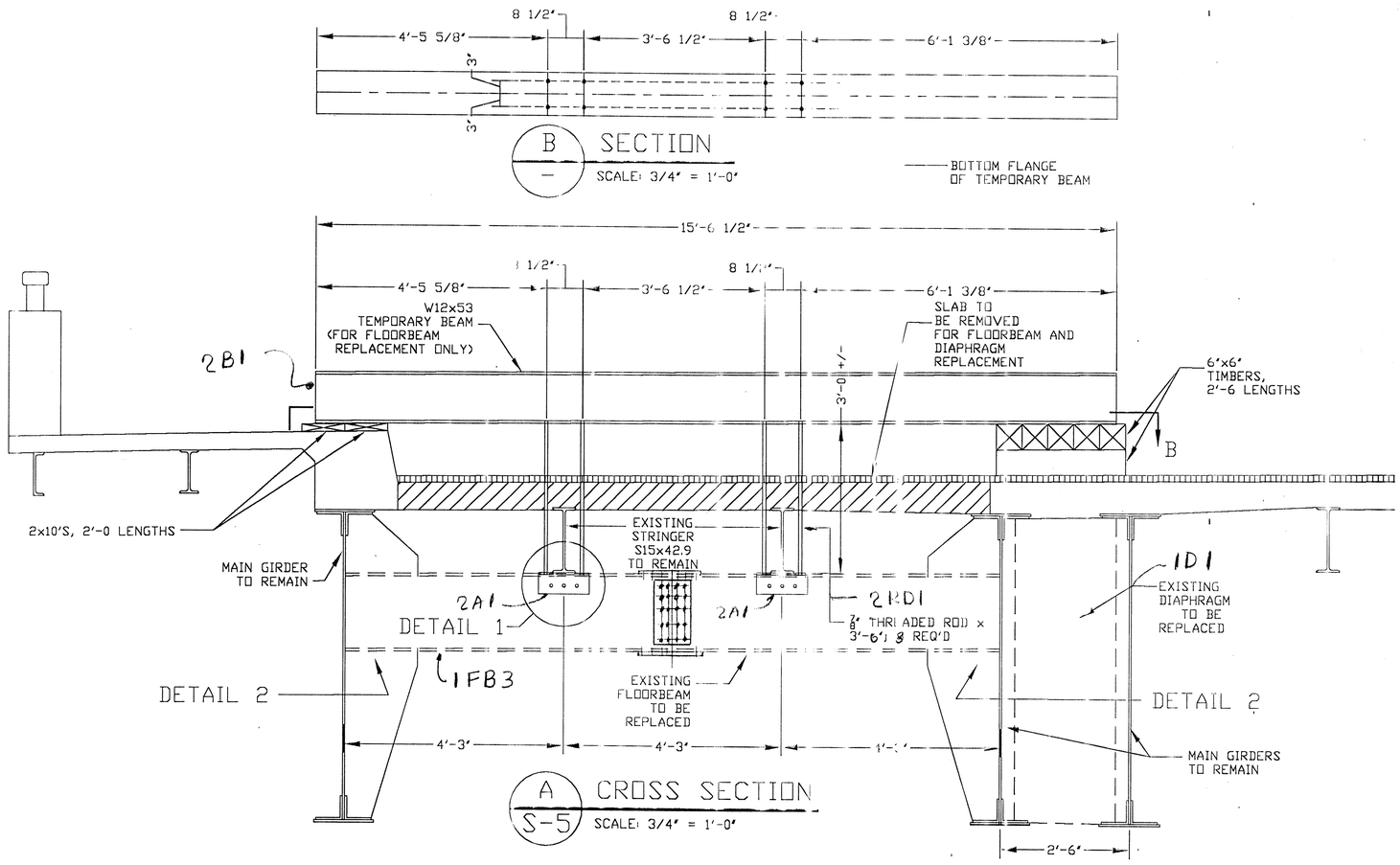

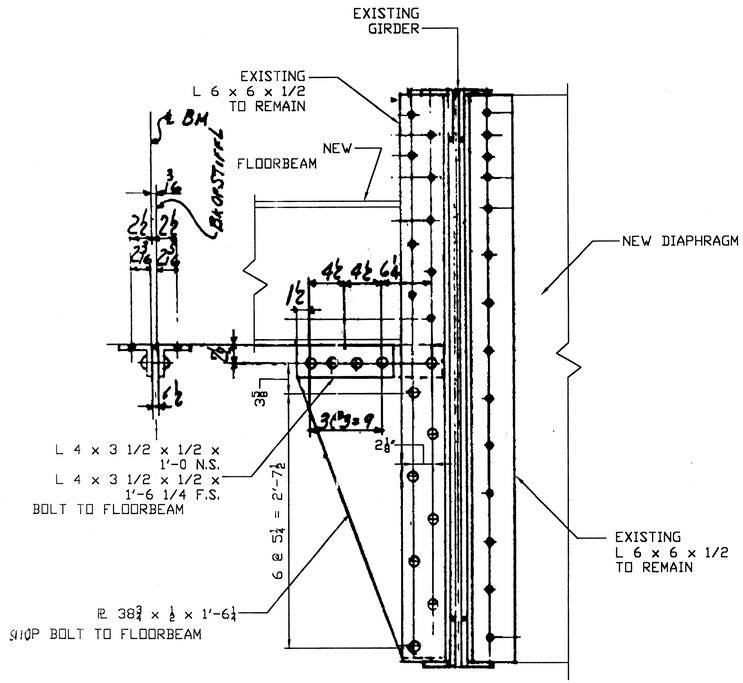

DETAIL 2

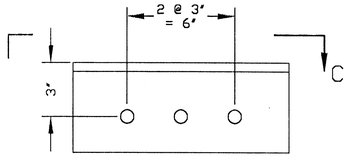

DETAIL 1
SCALE: 3" = 1'-0"

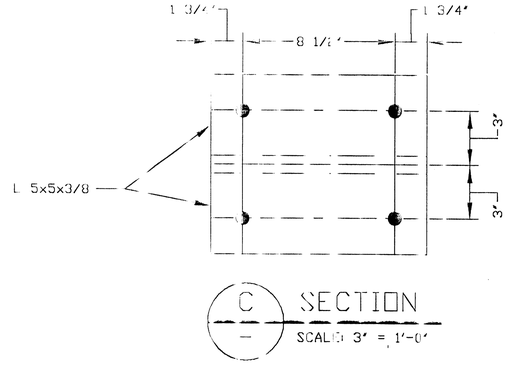

C
SECTION
SCALE: 3" = 1'-0"

AS BUILT

ACTIVE MEMBER
CATEGORY III SHOP

1660820127

4	4/12/04	"As Built"	8			
3	3/8/04	For Construction	7			
2	3/8/04	Added Splice	6			
1	2/25/04	APPROVAL	5			
	DATE	SENT FOR		DATE	SENT FOR	

MUNSTER STEEL CO., INC.
Fabricators of Structural and Miscellaneous Steel
9505 CALUMET AVE., MUNSTER, IND.

PROJECT	CITY OF CHICAGO-D.O.T. BUREAU OF BRIDGES AND TRANSIT; IRVING PARK ROAD BRIDGE EXP.; PROJ. NO. E-1-051
CUSTOMER	C.D.O.T.

HOLES	PAINT	DRAWN	CHECKED	CONTRACT	DWG. NO
-	-	MP	NRC	M1080	E1

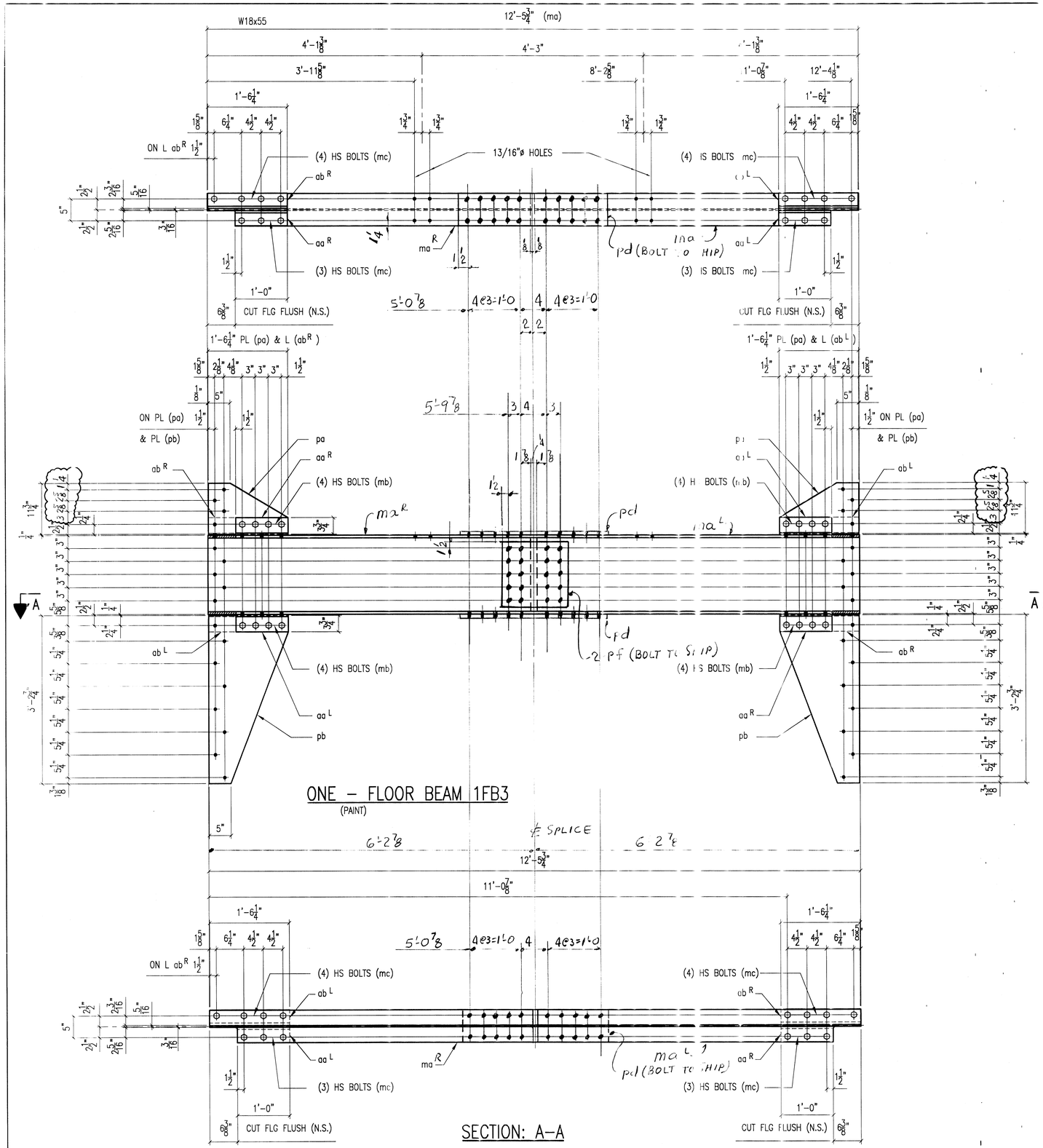

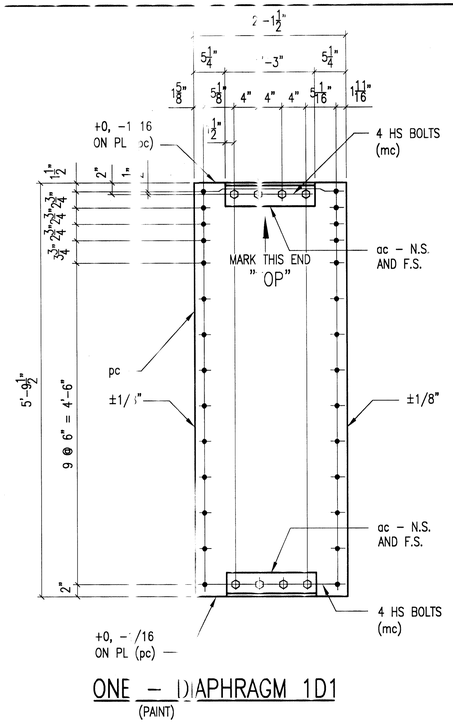

ONE – DIAPHRAGM 1D1
(PAINT)

BILL OF MATERIAL

LINE NO	QTY	MARK	DESCRIPTION	REMARKS
1				
2	ONE	1FB3	FLOOR BEAM	
3	2	ma R/L	W18x55 x 6'-2 3/4	
4	2	pa	PL 1/2"x11 3/4" x 1'-6 1/4"	
5	2	pb	PL 1/2"x18 1/4" x 3'-2 3/4"	
6	4	aa R/L	L4x3 1/2x1/2 x 1'-0"	
7	4	ab R/L	L4x3 1/2x1/2 x 1'-6 1/4"	
8	16	mb	7/8"ø x3" LG A325 HS BOLTS W/HVY	ASTM A325 GALV.
9			HEX NUT AND (1) WASHER EACH	
10	16	mc	7/8"ø x2 1/2" LG A325 HS BOLTS W/HVY	ASTM A325 GALV.
11			HEX NUT AND (1) WASHER EACH	
12	2	pd	PL 5/8 x 7 1/2 x 2'-7	
13	2	pf	PL 3/8 x 15 x 1'-1	
14	ONE	1D1	DIAPHRAGM	
15	1	pc	PL 3/8"x25 1/2" x 5'-9 1/2"	
16	4	ac	L4x4x1/2 x 1'-3"	
17	8	md	7/8"ø x2 3/4" LG A325 HS BOLTS W/HVY	ASTM A325 GALV.
18			HEX NUT AND (1) WASHER EACH	
19				
20				
21				
22				
23				
24				
25				
26				
27				
28				
29				
30				
31				
32				
33				
34				
35				
36				
37				

FIELD BOLT LIST: (MECHANICALY GALVANIZED)

28 – 7/8"ø x2 1/4" A325 HS BOLTS W/HVY HEX NUT
50 – 7/8"ø x2 1/2" A325 HS BOLTS W/ HVY HEX NUT
4 – 7/8"ø x3" A325 HS BOLTS W/ HVY HEX NUT
40 – 7/8"ø x 2 3/4" LG A325 HS BOLTS W/ HVY HEX NUT
122 – STANDARD HARDENED WASHERS FOR 7/8"ø HS BOLTS

GENERAL NOTES:

MATERIAL: ASTM A36, U.N.
OPEN HOLES: 15/16 ø, UNLESS NOTED
SURFACE PREP: PAINTED SURFACES TO BE BLAST CLEANED PER SSPC SP10 (NEAR WHITE)
PAINT: (1) ONE COAT INORGANIC ZINC PRIMER, U.N.
WELDING: NONE
ERECTION DRAWING: E1 [redacted]

plot scale: 1=12 1660820128

NO.	DATE	SENT FOR	NO.	DATE	SENT FOR
4	4/29/04	NBIS Built"	8		
3	3-8-04	For FAB	7		
2	3-7-04	Appr. (SPLICE ADDED)	6		
1	02-23-04	APPROVAL	5		

AMERICAN INSTITUTE OF STEEL CONSTRUCTION INC. FOUNDED 1921
ACTIVE MEMBER CATEGORY III SHOP

M UNSTER STEEL CO., INC.
Fabricators of Structural and Miscellaneous Steel
9505 CALUMET AVE., MUNSTER, IND.

NO.	DATE	REVISION	BY
1			
2			
3			
4			
5			
6			

PROJECT: CITY OF CHICAGO – DEPT OF TRANSPORTATION – BUREAU OF BRIDGES AND TRANSIT – IRVING PARK ROAD BRIDGE EXP JT REPAIRS PROJECT NUMBER E-1-051
CUSTOMER: CUSTOMER: C.D.O.T.
HOLES SEE NOTES
PAINT SEE NOTES
DRAWN FDZ CHECKED MP
CONTRACT NO M1080
DRAWING NO 1

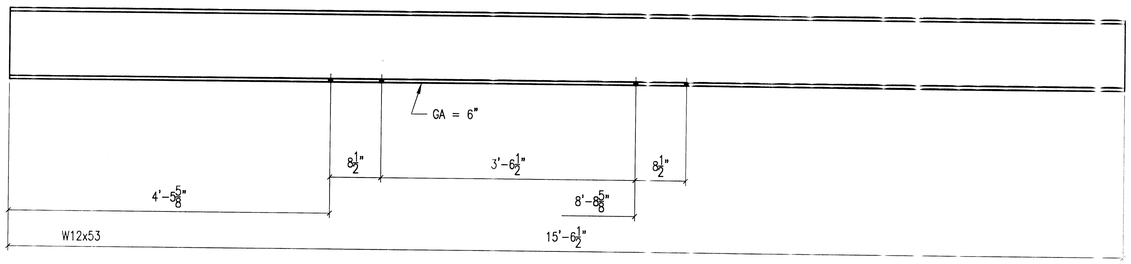

ONE – BEAM 2B1
(NO PAINT)

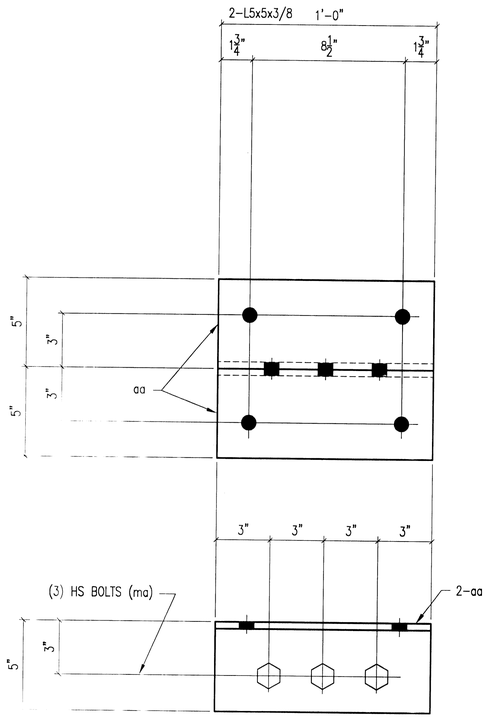

2 – ANGLE ASSEMBLY 2A1
(NO PAINT)

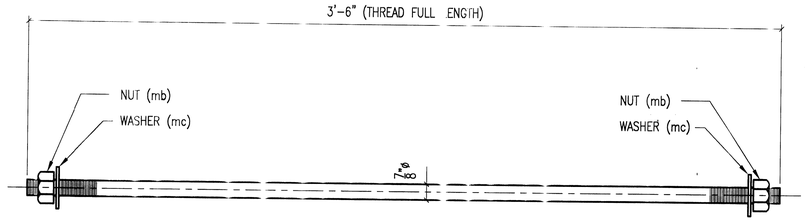

8 – THREADED RODS 2RD1
(NO PAINT)

BILL OF MATERIAL

LINE NO	QTY	MARK	DESCRIPTION	REMARKS
1				
2	ONE	2B1	BEAM	
3	1		W12x53 x 15'-6 1/2"	(NO PAINT)
4				
5				
6	2	2A1	ANGLE ASSEMBLY	(NO PAINT)
7	4	aa	L5x5x3/8 x 1'-0"	
8	6	ma	7/8"ø x 2 1/4" LG A325 HS BOLTS W/HVY	ASTM A325
9			HEX NUT AND (1) WASHER EACH	
10				
11				
12	8	2RD1	THREADED ROD	(NO FINISH)
13	8		RD 7/8"ø x 3'-6"	THREAD FULL LGTH
14	16	mb	7/8" A325 HVY HEX NUT	ASTM A325
15	16	mc	HD WASHER FOR 7/8"ø BOLT	
16				
17				
18				
19				
20				
21				
22				
23				
24				
25				
26				
27				
28				
29				
30				
31				
32				
33				
34				
35				
36				
37				

GENERAL NOTES:

MATERIAL: ASTM A36, U.N.
OPEN HOLES: 15/16 ø
SURFACE PREP: NONE
PAINT: NONE
WELDING: NONE
ERECTION DRAWING: E1 [redacted]

plot scale: 1=12 **1660820129**

ACTIVE MEMBER
CATEGORY III SHOP

NO.	DATE	REVISION	BY
1			
2			
3			
4			
5			
6			

4			8		
3	4-29-04	"AS BUILT"	7		
2	3-8-04	For FAB	6		
1	02-23-04	APPROVAL	5		
	DATE	SENT FOR		DATE	SENT FOR

UNSTER STEEL CO., INC.
Fabricators of Structural and Miscellaneous Steel
9505 CALUMET AVE., MUNSTER, IND.

PROJECT: CITY OF CHICAGO – DEPT OF TRANSPORTATION – BUREAU OF BRIDGES AND TRANSIT – IRVING PARK ROAD BRIDGE EXP JT REPAIRS
PROJECT NUMBER E-1-051
CUSTOMER: C.D.O.T.

HOLES SEE NOTES
PAINT SEE NOTES
DRAWN FDZ CHECKED MP

CONTRACT NO	DRAWING NO
M1080	2

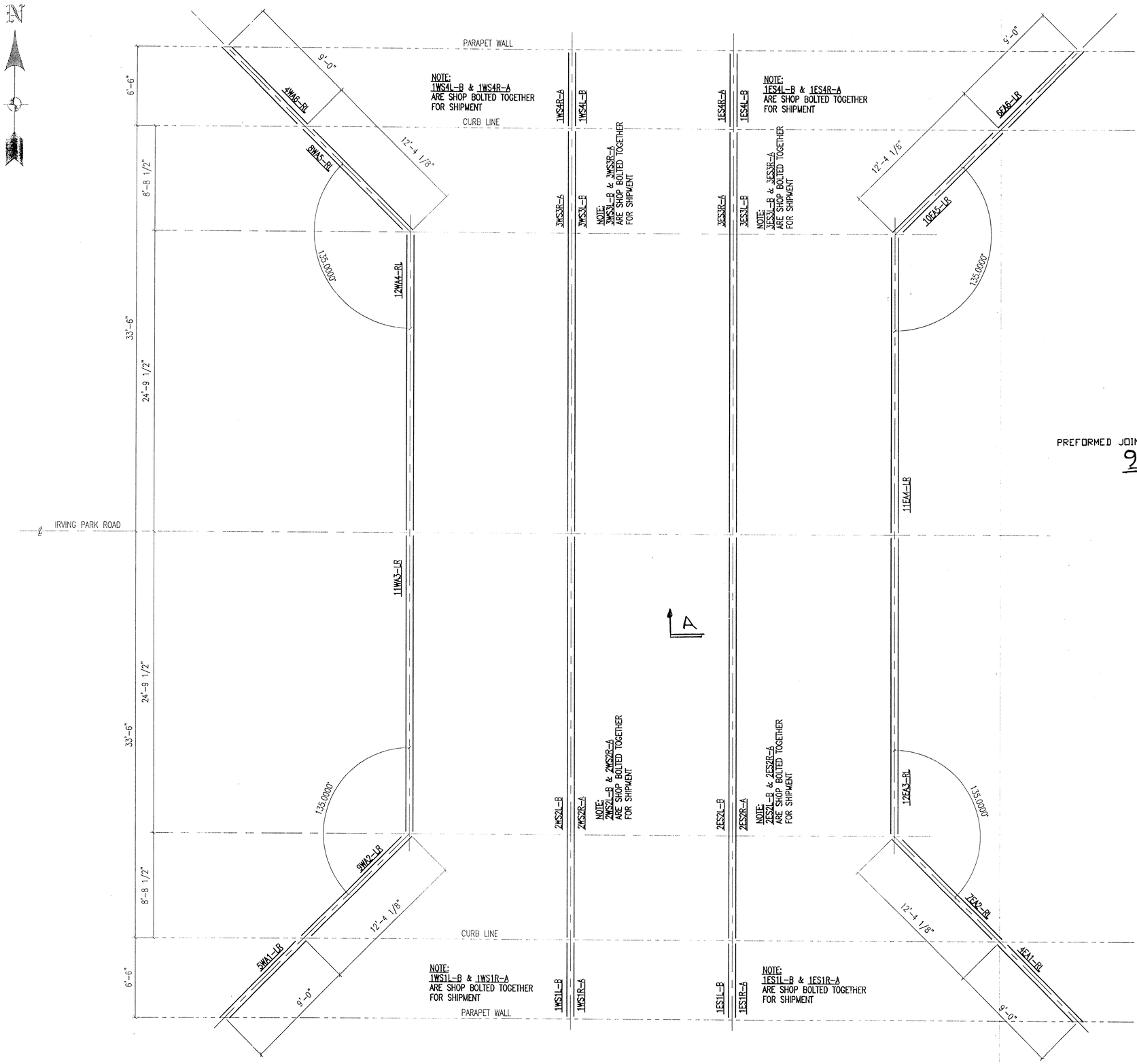

EXPANSION JOINT PLAN

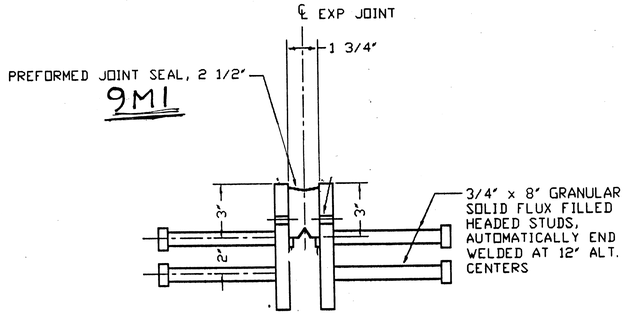

A SECTION (TYP)
SCALE: 3"=1'-0"

ACTIVE MEMBER CATEGORY III SHOP

1660820130

plot scale: 1=48

4	7/19/16	FAP	8		
3	7-8-02	2ND APPROVAL	7		
2	07-08-02	RELEASE FOR FABRICATION	6		
1	06-17-02	APPROVAL	5	12/16/02	"As built"
	DATE	SENT FOR		DATE	SENT FOR

M UNSTER STEEL CO., INC.
Fabricators of Structural and Miscellaneous Steel
9505 CALUMET AVE., MUNSTER, IND.

PROJECT: CITY OF CHICAGO – DEPT OF TRANSPORTATION – BUREAU OF BRIDGES AND TRANSIT – IRVING PARK ROAD BRIDGE EXPANSION JOINT REPAIRS – CDOT PROJ NO.: E-1-051

CUSTOMER: C.D.O.T.

HOLES	PAINT	DRAWN	CHECKED	CONTRACT NO	DRAWING NO
SEE NOTES	SEE NOTES	FDZ	MP	2641	E1

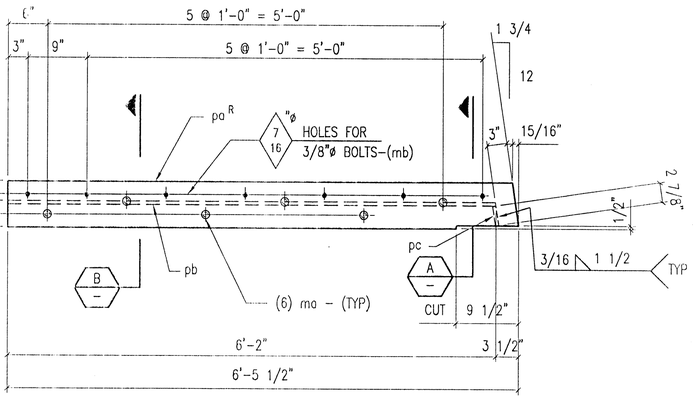

ONE – EXPANSION JOINT – 1WS1R–A

ONE – EXPANSION JOINT – 1ES1R–A

NOTE: ALIKE EXCEPT FOR SHIPPING MARKS

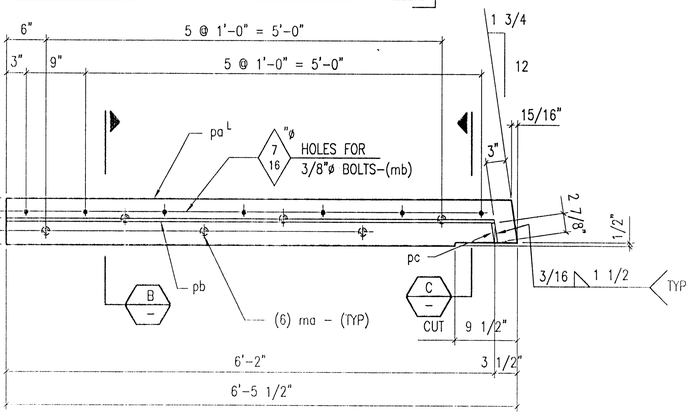

ONE – EXPANSION JOINT – 1WS1L–B

ONE – EXPANSION JOINT – 1ES1L–B

NOTE: ALIKE EXCEPT FOR SHIPPING MARKS

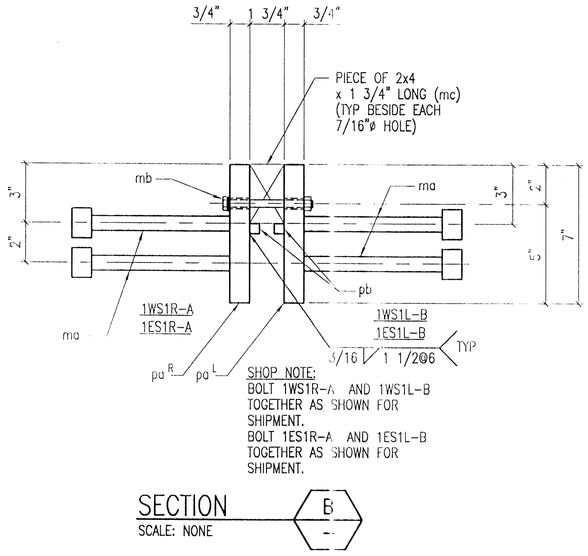

SHOP NOTE:
BOLT 1WS1R–A AND 1WS1L–B TOGETHER AS SHOWN FOR SHIPMENT.
BOLT 1ES1R–A AND 1ES1L–B TOGETHER AS SHOWN FOR SHIPMENT.

SECTION B
SCALE: NONE

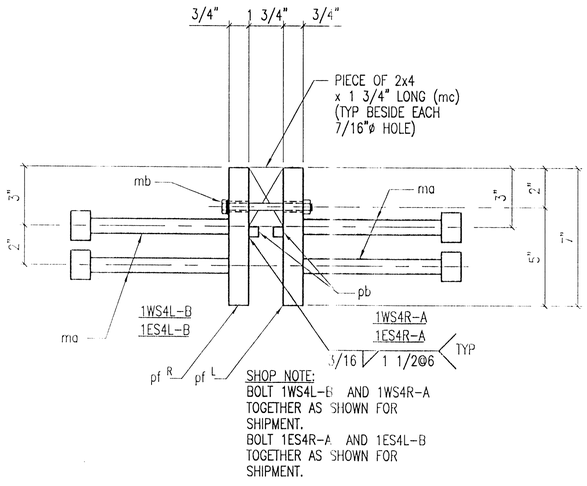

SHOP NOTE:
BOLT 1WS4L–B AND 1WS4R–A TOGETHER AS SHOWN FOR SHIPMENT.
BOLT 1ES4R–A AND 1ES4L–B TOGETHER AS SHOWN FOR SHIPMENT.

SECTION D
SCALE: NONE

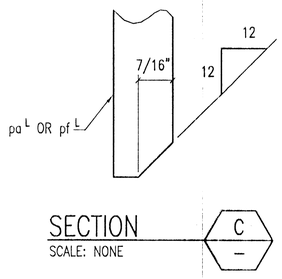

SECTION C
SCALE: NONE

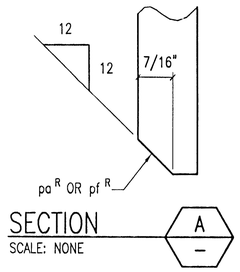

SECTION A
SCALE: NONE

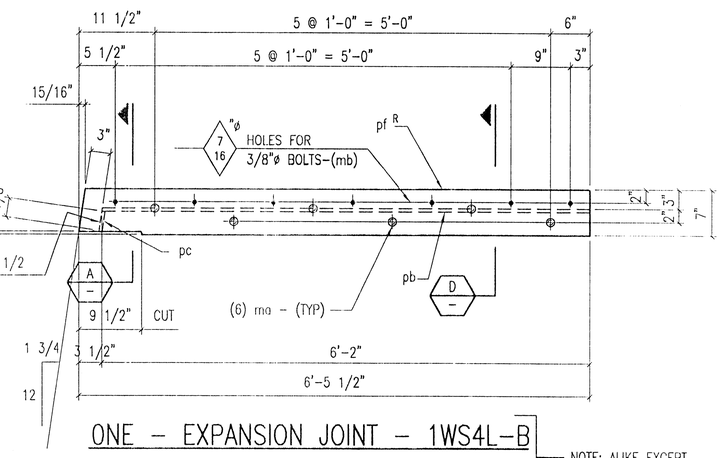

ONE – EXPANSION JOINT – 1WS4L–B

ONE – EXPANSION JOINT – 1ES4L–B

NOTE: ALIKE EXCEPT FOR SHIPPING MARKS

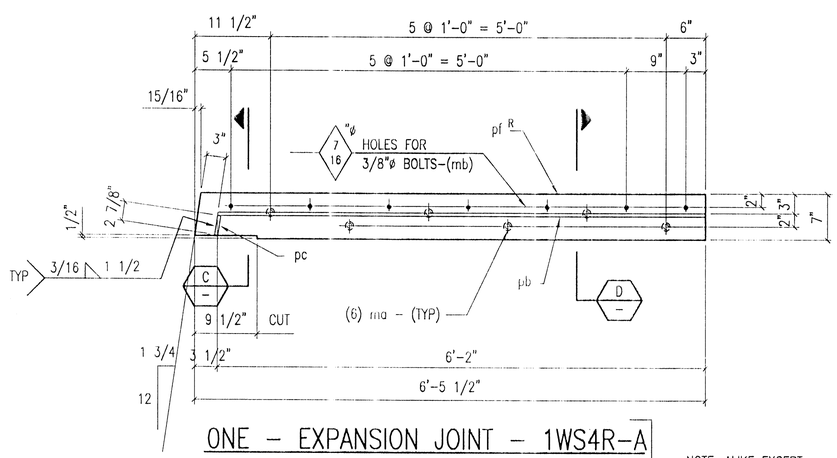

ONE – EXPANSION JOINT – 1WS4R–A

ONE – EXPANSION JOINT – 1ES4R–A

NOTE: ALIKE EXCEPT FOR SHIPPING MARKS

GENERAL NOTES:

MATERIAL: AASHTO M270 (ASTM A709), GR 36
OPEN HOLES: AS NOTED
SURFACE PREP: SP10
PAINT: YES, ONE SHOP COAT OF INORGANIC ZINC–CARBOZINC II H.S.
WELDING: YES, E70XX ELECTRODES
ERECTION DRAWING: E1

BILL OF MATERIAL

LINE NO	QTY	MARK	DESCRIPTION	REMARKS
1	ONE	1WS1R–A	EXPANSION JOINT	SHIP WITH 1WS1L–B
2	1	pa R	PL 3/4" x 7" x 6'–5 1/2"	
3	1	pb	PL 1/2" x 1/2" x 6'–2"	
4	1	pc	PL 1/2" x 1/2" x 0'–2 7/8"	
5	6	ma	3/4"ø x 8" GRANULAR SOLID FLUX	
6			FILLED HEADED STUDS	
7	7	mb	3/8" x 4 1/2" LG STD BOLT W/ HEX	
8			NUT AND (1) WASHER EACH	
9	7	mc	WOOD BLOCK 2x4 x 0'–1 3/4" LG	
10				
11	ONE	1WS1L–B	EXPANSION JOINT	SHIP WITH 1WS1R–A
12	1	pa L	PL 3/4" x 7" x 6'–5 1/2"	
13	1	pb	PL 1/2" x 1/2" x 6'–2"	
14	1	pc	PL 1/2" x 1/2" x 0'–2 7/8"	
15	6	ma	3/4"ø x 8" GRANULAR SOLID FLUX	
16			FILLED HEADED STUDS	
17				
18	ONE	1ES1R–A	EXPANSION JOINT	SHIP WITH 1ES1L–B
19	1	pa R	PL 3/4" x 7" x 6'–5 1/2"	
20	1	pb	PL 1/2" x 1/2" x 6'–2"	
21	1	pc	PL 1/2" x 1/2" x 0'–2 7/8"	
22	6	ma	3/4"ø x 8" GRANULAR SOLID FLUX	
23			FILLED HEADED STUDS	
24	7	mb	3/8" x 4 1/2" LG STD BOLT W/ HEX	
25			NUT AND (1) WASHER EACH	
26	7	mc	WOOD BLOCK 2x4 x 0'–1 3/4" LG	
27				
28	ONE	1ES1L–B	EXPANSION JOINT	SHIP WITH 1ES1R–A
29	1	pa L	PL 3/4" x 7" x 6'–5 1/2"	
30	1	pb	PL 1/2" x 1/2" x 6'–2"	
31	1	pc	PL 1/2" x 1/2" x 0'–2 7/8"	
32	6	ma	3/4"ø x 8" GRANULAR SOLID FLUX	
33			FILLED HEADED STUDS	
34				
35	ONE	1WS4L–B	EXPANSION JOINT	SHIP WITH 1WS4R–A
36	1	pf R	PL 3/4" x 7" x 6'–5 1/2"	
37	1	pb	PL 1/2" x 1/2" x 6'–2"	
38	1	pc	PL 1/2" x 1/2" x 0'–2 7/8"	
39	6	ma	3/4"ø x 8" GRANULAR SOLID FLUX	
40			FILLED HEADED STUDS	
41	7	mb	3/8" x 4 1/2" LG STD BOLT W/ HEX	
42			NUT AND (1) WASHER EACH	
43	7	mc	WOOD BLOCK 2x4 x 0'–1 3/4" LG	
44				
45	ONE	1WS4R–A	EXPANSION JOINT	SHIP WITH 1WS1L–B
46	1	pf L	PL 3/4" x 7" x 6'–5 1/2"	
47	1	pb	PL 1/2" x 1/2" x 6'–2"	
48	1	pc	PL 1/2" x 1/2" x 0'–2 7/8"	
49	6	ma	3/4"ø x 8" GRANULAR SOLID FLUX	
50			FILLED HEADED STUDS	
51				
52	ONE	1ES4L–B	EXPANSION JOINT	SHIP WITH 1ES4R–A
53	1	pf R	PL 3/4" x 7" x 6'–5 1/2"	
54	1	pb	PL 1/2" x 1/2" x 6'–2"	
55	1	pc	PL 1/2" x 1/2" x 0'–2 7/8"	
56	6	ma	3/4"ø x 8" GRANULAR SOLID FLUX	
57			FILLED HEADED STUDS	
58	7	mb	3/8" x 4 1/2" LG STD BOLT W/ HEX	
59			NUT AND (1) WASHER EACH	
60	7	mc	WOOD BLOCK 2x4 x 0'–1 3/4" LG	
61				
62	ONE	1ES4R–A	EXPANSION JOINT	SHIP WITH 1ES1L–B
63	1	pf L	PL 3/4" x 7" x 6'–5 1/2"	
64	2	pb	PL 1/2" x 1/2" x 6'–2"	
65	1	pc	PL 1/2" x 1/2" x 0'–2 7/8"	
66	6	ma	3/4"ø x 8" GRANULAR SOLID FLUX	
67			FILLED HEADED STUDS	

– [redacted] 1660820131 –

plot scale: 1=12

	DATE	SENT FOR		DATE	SENT FOR
4	7/9/02	FAB	8		
3	7-8-02	2ND APPROVAL	7		
2	07-08-02	RELEASE FOR FABRICATION	6		
1	06-17-02	APPROVAL	5	12/10/02	"As bu.lt"

AMERICAN INSTITUTE OF STEEL CONSTRUCTION INC. FOUNDED 1921
ACTIVE MEMBER
CATEGORY III SHOP

UNSTER STEEL CO., INC.
Fabricators of Structural and Miscellaneous Steel
9505 CALUMET AVE., MUNSTER, IND.

PROJECT: CITY OF CHICAGO – DEPT OF TRANSPORTATION – BUREAU OF BRIDGES AND TRANSIT – IRVING PARK ROAD BRIDGE EXPANSION JOINT REPAIRS – CDOT PROJ NO.: E–1–051

CUSTOMER: C.D.O.T.

HOLES: SEE NOTES
PAINT: SEE NOTES
DRAWN: FDZ
CHECKED: MP

CONTRACT NO	DRAWING NO
2641	1

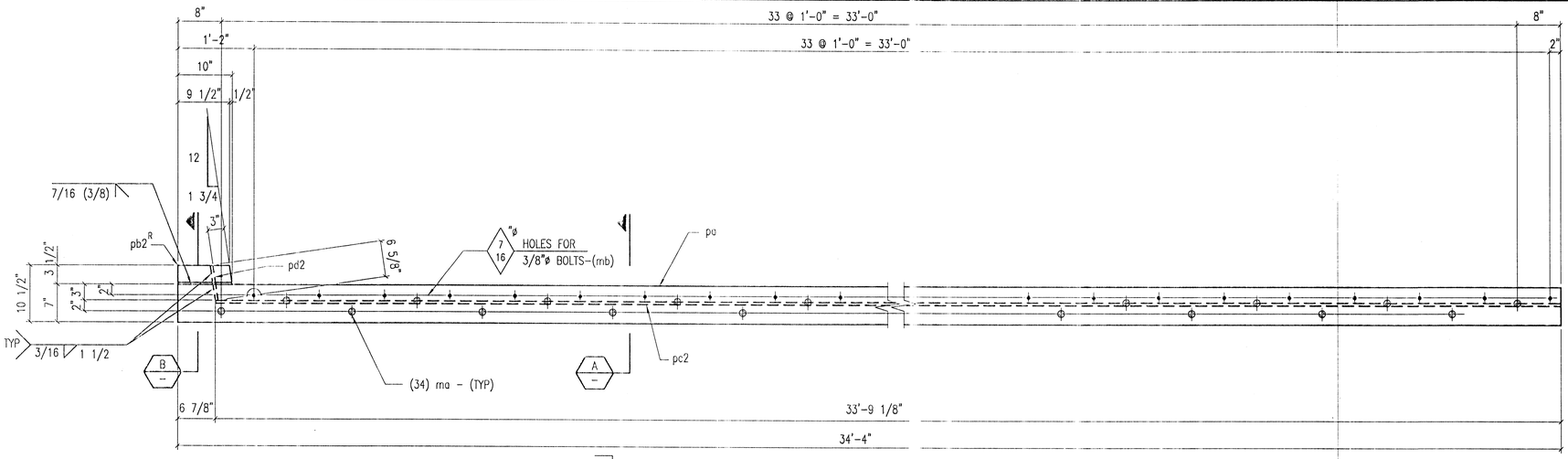

ONE – EXPANSION JOINT – 2WS2R–A
ONE – EXPANSION JOINT – 2ES2R–A

NOTE: ALIKE EXCEPT FOR SHIPPING MARKS

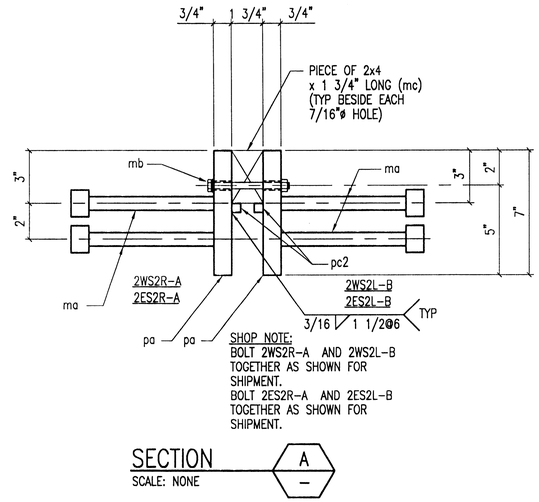

SECTION A
SCALE: NONE

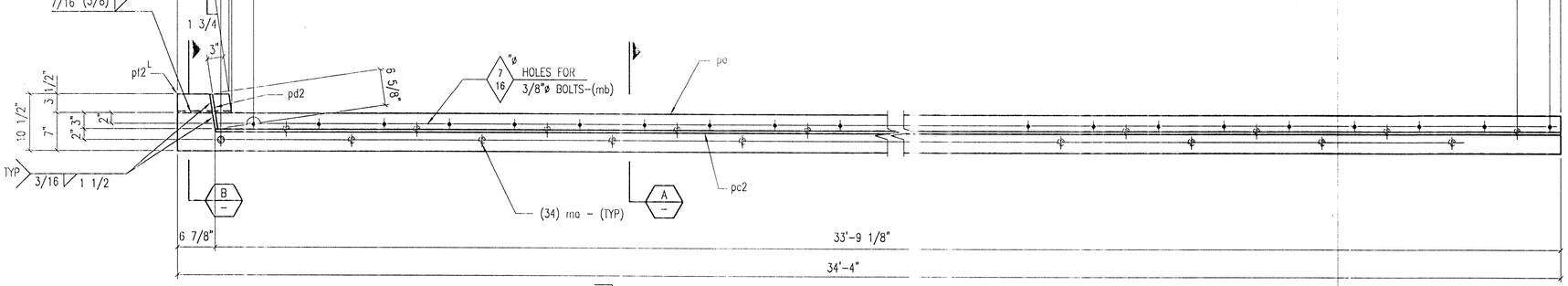

ONE – EXPANSION JOINT – 2WS2L–B
ONE – EXPANSION JOINT – 2ES2L–B

NOTE: ALIKE EXCEPT FOR SHIPPING MARKS

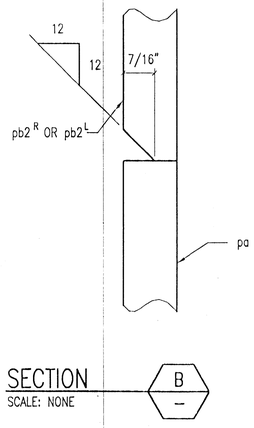

SECTION B
SCALE: NONE

BILL OF MATERIAL

LINE NO	QTY	MARK	DESCRIPTION	REMARKS
1	ONE	2WS2R–A	EXPANSION JOINT	SHIP WITH 2WS2L–B
2	1	pa	PL 3/4" x 7" x 34'–4"	
3	1	pb2R	PL 3/4" x 3 1/2" x 0'–10"	BEV (1) EDGE
4	1	pc2	PL 1/2" x 1/2" x 33'–9 1/8"	
5	1	pd2	PL 1/2" x 1/2" x 0'–6 5/8"	
6	34	ma	3/4"ø x 8" GRANULAR SOLID FLUX FILLED HEADED STUDS	
7				
8	34	mb	3/8" x 4 1/2" LG STD BOLT W/ HEX NUT AND (1) WASHER EACH	
9				
10	34	mc	WOOD BLOCK 2x4 x 0'–1 3/4" LG	
11				
12				
13	ONE	2WS2L–B	EXPANSION JOINT	SHIP WITH 2WS2R–A
14	1	pa	PL 3/4" x 7" x 34'–4"	
15	1	pb2L	PL 3/4" x 3 1/2" x 0'–10"	BEV (1) EDGE
16	1	pc2	PL 1/2" x 1/2" x 33'–9 1/8"	
17	1	pd2	PL 1/2" x 1/2" x 0'–6 5/8"	
18	34	ma	3/4"ø x 8" GRANULAR SOLID FLUX FILLED HEADED STUDS	
19				
20				

BILL OF MATERIAL

LINE NO	QTY	MARK	DESCRIPTION	REMARKS
21	ONE	2ES2R–A	EXPANSION JOINT	SHIP WITH 2ES2L–B
22	1	pa	PL 3/4" x 7" x 34'–4"	
23	1	pb2R	PL 3/4" x 3 1/2" x 0'–10"	BEV (1) EDGE
24	1	pc2	PL 1/2" x 1/2" x 33'–9 1/8"	
25	1	pd2	PL 1/2" x 1/2" x 0'–6 5/8"	
26	34	ma	3/4"ø x 8" GRANULAR SOLID FLUX FILLED HEADED STUDS	
27				
28	34	mb	3/8" x 4 1/2" LG STD BOLT W/ HEX NUT AND (1) WASHER EACH	
29				
30	34	mc	WOOD BLOCK 2x4 x 0'–1 3/4" LG	
31				
32				
33	ONE	2ES2L–B	EXPANSION JOINT	SHIP WITH 2ES2R–A
34	1	pa	PL 3/4" x 7" x 34'–4"	
35	1	pb2L	PL 3/4" x 3 1/2" x 0'–10"	BEV (1) EDGE
36	1	pc2	PL 1/2" x 1/2" x 33'–9 1/8"	
37	1	pd2	PL 1/2" x 1/2" x 0'–6 5/8"	
38	34	ma	3/4"ø x 8" GRANULAR SOLID FLUX FILLED HEADED STUDS	
39				
40				

GENERAL NOTES:

MATERIAL: AASHTO M270 (ASTM A709), GR 36
OPEN HOLES: AS NOTED
SURFACE PREP: SP10
PAINT: YES, ONE SHOP COAT OF INORGANIC ZINC–CARBOZINC II H.S.
WELDING: YES, E70XX ELECTRODES
ERECTION DRAWING: E1

– 1660820132 –

plot scale: 1=12

	DATE	SENT FOR		DATE	SENT FOR
4	7/9/02	FAB	8		
3	7-8-02	2ND APPROVAL	7		
2	07-08-02	RELEASE FOR FABRICATION	6		
1	06-17-02	APPROVAL	5	12/16/02	*As built*

UNSTER STEEL CO., INC.
Fabricators of Structural and Miscellaneous Steel
9505 CALUMET AVE., MUNSTER, IND.

PROJECT: CITY OF CHICAGO – DEPT OF TRANSPORTATION – BUREAU OF BRIDGES AND TRANSIT – IRVING PARK ROAD BRIDGE EXPANSION JOINT REPAIRS – CDOT PROJ NO.: E-1-051
CUSTOMER: C.D.O.T.

AMERICAN INSTITUTE OF STEEL CONSTRUCTION FOUNDED 1921
ACTIVE MEMBER CATEGORY III SHOP

HOLES: SEE NOTES
PAINT: SEE NOTES
DRAWN: FDZ
CHECKED: MP

CONTRACT NO	DRAWING NO
2641	2

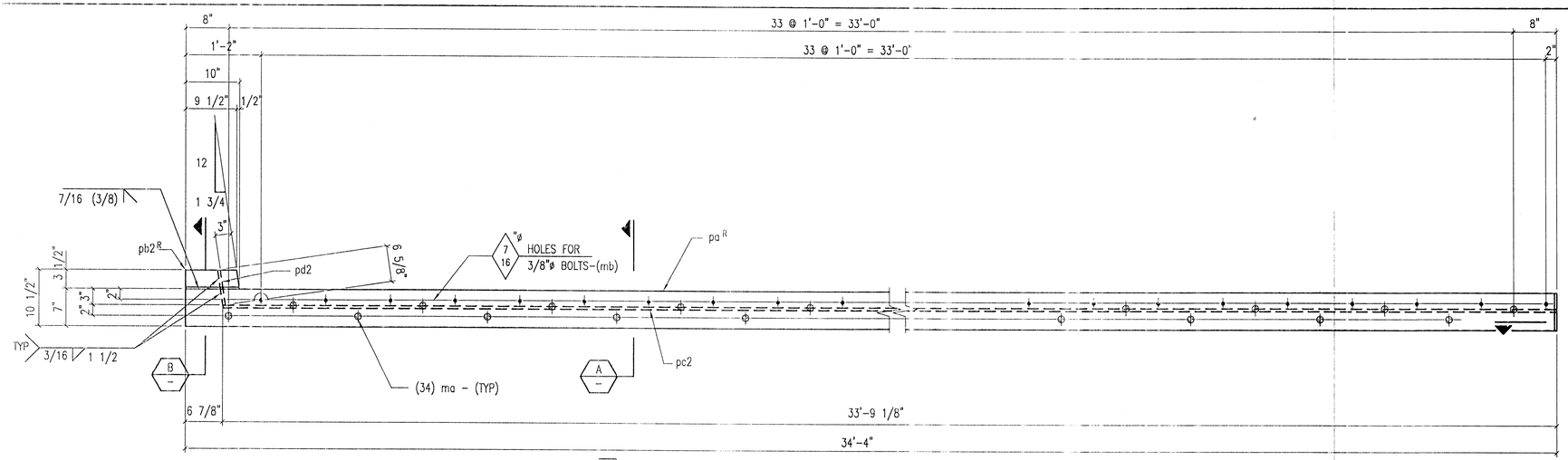

ONE - EXPANSION JOINT - 3WS3R-A
ONE - EXPANSION JOINT - 3ES3R-A

NOTE: ALIKE EXCEPT FOR SHIPPING MARKS

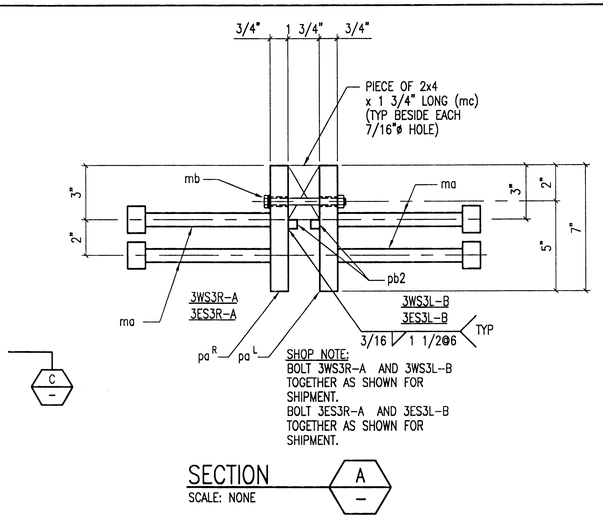

SHOP NOTE:
BOLT 3WS3R-A AND 3WS3L-B TOGETHER AS SHOWN FOR SHIPMENT.
BOLT 3ES3R-A AND 3ES3L-B TOGETHER AS SHOWN FOR SHIPMENT.

SECTION A
SCALE: NONE

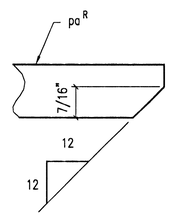

SECTION C
SCALE: NONE

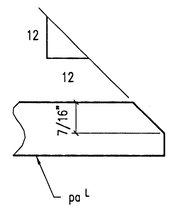

SECTION D
SCALE: NONE

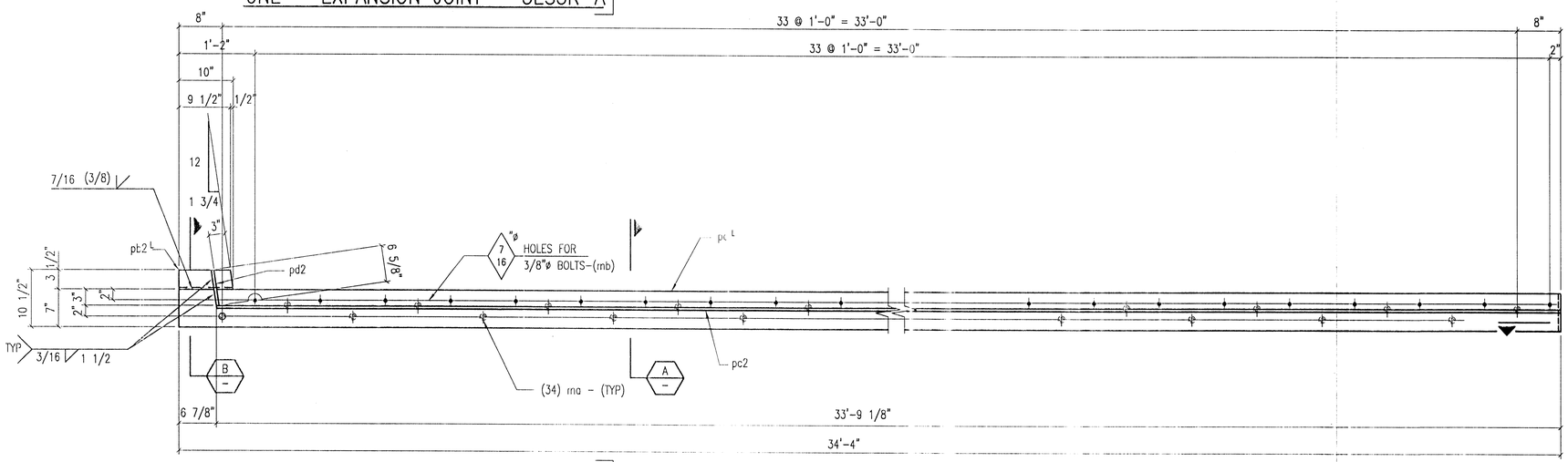

ONE - EXPANSION JOINT - 3WS3L-B
ONE - EXPANSION JOINT - 3ES3L-B

NOTE: ALIKE EXCEPT FOR SHIPPING MARKS

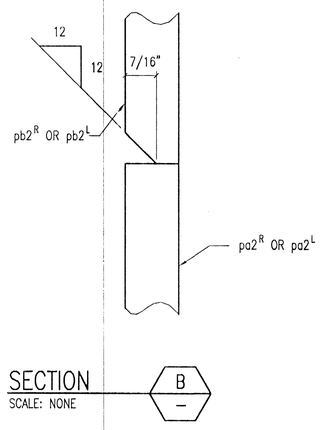

SECTION B
SCALE: NONE

BILL OF MATERIAL

LINE NO	QTY	MARK	DESCRIPTION	REMARKS
1	ONE	3WS3R-A	EXPANSION JOINT	SHIP WITH 3WS3L-B
2	1	paR	PL 3/4" x 7" x 34'-4"	BEV (1) END
3	1	pb2R	PL 3/4" x 3 1/2" x 0'-10"	BEV (1) EDGE
4	1	pc2	PL 1/2" x 1/2" x 33'-9 1/8"	
5	1	pd2	PL 1/2" x 1/2" x 0'-6 5/8"	
6	34	ma	3/4"ø x 8" GRANULAR SOLID FLUX FILLED HEADED STUDS	
8	34	mb	3/8" x 4 1/2" LG STD BOLT W/ HEX NUT AND (1) WASHER EACH	
10	34	mc	WOOD BLOCK 2x4 x 0'-1 3/4" LG	
13	ONE	3WS3L-B	EXPANSION JOINT	SHIP WITH 3WS3R-A
14	1	paL	PL 3/4" x 7" x 34'-4"	BEV (1) END
15	1	pb2L	PL 3/4" x 3 1/2" x 0'-10"	BEV (1) EDGE
16	1	pc2	PL 1/2" x 1/2" x 33'-9 1/8"	
17	1	pd2	PL 1/2" x 1/2" x 0'-6 5/8"	
18	34	ma	3/4"ø x 8" GRANULAR SOLID FLUX FILLED HEADED STUDS	

BILL OF MATERIAL

LINE NO	QTY	MARK	DESCRIPTION	REMARKS
21	ONE	3ES3R-A	EXPANSION JOINT	SHIP WITH 3ES3L-B
22	1	paR	PL 3/4" x 7" x 34'-4"	BEV (1) END
23	1	pb2R	PL 3/4" x 3 1/2" x 0'-10"	BEV (1) EDGE
24	1	pc2	PL 1/2" x 1/2" x 33'-9 1/8"	
25	1	pd2	PL 1/2" x 1/2" x 0'-6 5/8"	
26	34	ma	3/4"ø x 8" GRANULAR SOLID FLUX FILLED HEADED STUDS	
28	34	mb	3/8" x 4 1/2" LG STD BOLT W/ HEX NUT AND (1) WASHER EACH	
30	34	mc	WOOD BLOCK 2x4 x 0'-1 3/4" LG	
33	ONE	3ES3L-B	EXPANSION JOINT	SHIP WITH 3ES3R-A
34	1	paL	PL 3/4" x 7" x 34'-4"	BEV (1) END
35	1	pb2L	PL 3/4" x 3 1/2" x 0'-10"	BEV (1) EDGE
36	1	pc2	PL 1/2" x 1/2" x 33'-9 1/8"	
37	1	pd2	PL 1/2" x 1/2" x 0'-6 5/8"	
38	34	ma	3/4"ø x 8" GRANULAR SOLID FLUX FILLED HEADED STUDS	

ACTIVE MEMBER CATEGORY III SHOP

GENERAL NOTES:

MATERIAL: AASHTO M270 (ASTM A709), GR 36
OPEN HOLES: AS NOTED
SURFACE PREP: SP10
PAINT: YES, ONE SHOP COAT OF INORGANIC ZINC-CARBOZINC II H.S.
WELDING: YES, E70XX ELECTRODES
ERECTION DRAWING: E1 - 1660820133 -
plot scale: 1=12

	DATE	SENT FOR		DATE	SENT FOR
4	7/10/02	FAB	8		
3	7-8-02	2ND Approval	7		
2	07-08-02	RELEASE FOR FABRICATION	6		
1	06-17-02	APPROVAL	5	12/10/02	"As built"

M

UNSTER STEEL CO., INC.
Fabricators of Structural and Miscellaneous Steel
9505 CALUMET AVE., MUNSTER, IND.

PROJECT: CITY OF CHICAGO - DEPT OF TRANSPORTATION - BUREAU OF BRIDGES AND TRANSIT - IRVING PARK ROAD BRIDGE EXPANSION JOINT REPAIRS - CDOT PROJ NO.: E-1-051
CUSTOMER: C.D.O.T.

HOLES: SEE NOTES
PAINT: SEE NOTES
DRAWN: FDZ
CHECKED: MP

CONTRACT NO	DRAWING NO
2641	3

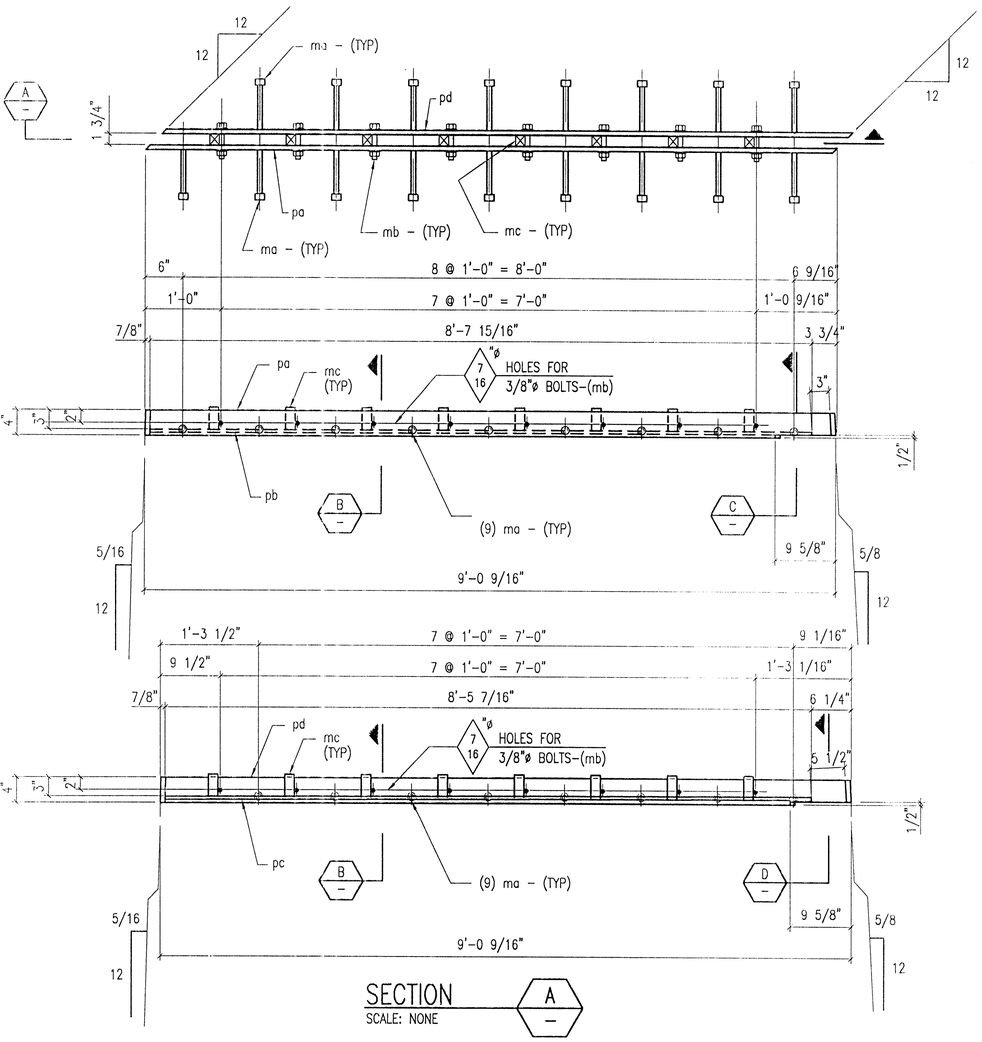

SECTION A
SCALE: NONE

ONE -- EXPANSION JOINT - 4EA1--RL
ONE -- EXPANSION JOINT - 4WA6-RL
NOTE: ALIKE EXCEPT FOR SHIPPING MARKS

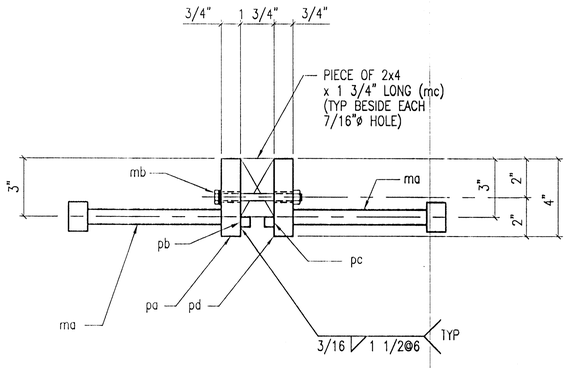

SECTION B
SCALE: NONE

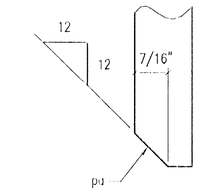

SECTION C
SCALE: NONE

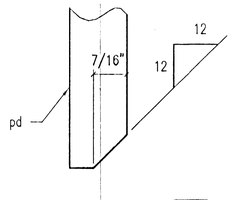

SECTION D
SCALE: NONE

BILL OF MATERIAL

LINE NO.	QTY	MARK	DESCRIPTION	REMARKS
1	ONE	4EA1-RL	EXPANSION JOINT	
2	1	pa	PL 3/4" x 4" x 9'-0 9/16"	BEV (2) ENDS
3	1	pb	PL 1/2" x 1/2" x 8'-7 15/16"	
4	1	pc	PL 1/2" x 1/2" x 8'-5 7/16"	
5	1	pd	PL 3/4" x 4" x 9'-0 9/16"	BEV (2) ENDS
6	17	ma	3/4"ø x 8" GRANULAR SOLID FLUX	
7			FILLED HEADED STUDS	
8	8	mb	3/8" x 4 1/2" LG STD BOLT W/ HEX	
9			NUT AND (1) WASHER EACH	
10	8	mc	WOOD BLOCK 2x4 x 0'-1 3/4" LG	
11				
12				
13				
14	ONE	4WA6-RL	EXPANSION JOINT	
15	1	pa	PL 3/4" x 4" x 9'-0 9/16"	BEV (2) ENDS
16	1	pb	PL 1/2" x 1/2" x 8'-7 15/16"	
17	1	pc	PL 1/2" x 1/2" x 8'-5 7/16"	
18	1	pd	PL 3/4" x 4" x 9'-0 9/16"	BEV (2) ENDS
19	17	ma	3/4"ø x 8" GRANULAR SOLID FLUX	
20			FILLED HEADED STUDS	
21	8	mb	3/8" x 4 1/2" LG STD BOLT W/ HEX	
22			NUT AND (1) WASHER EACH	
23	8	mc	WOOD BLOCK 2x4 x 0'-1 3/4" LG	
24				
25				
26				
27				
28				
29				
30				
31				
32				
33				
34				
35				
36				
37				
38				
39				
40				
41				
42				
43				
44				
45				
46				
47				
48				
49				
50				
51				
52				
53				
54				
55				

GENERAL NOTES:

MATERIAL: AASHTO M270 (ASTM A709), GR 36
OPEN HOLES: AS NOTED
SURFACE PREP: SP10
PAINT: YES, ONE SHOP COAT OF INORGANIC ZINC-CARBOZINC II H.S.
WELDING: YES, E70XX ELECTRODES
ERECTION DRAWING: E1 [redacted]

- 1660820134 -

plot scale: 1=12

	DATE	SENT FOR		DATE	SENT FOR
4	7/19/02	FAB	8		
3	7-8-02	2ND APPROVAL	7		
2	07-08-02	RELEASE FOR FABRICATION	6		
1	06-17-02	APPROVAL	5	8/16/02	"AS BUILT"

AMERICAN INSTITUTE OF STEEL CONSTRUCTION, INC. FOUNDED 1921
ACTIVE MEMBER CATEGORY III SHOP

UNSTER STEEL CO., INC.
Fabricators of Structural and Miscellaneous Steel
9505 CALUMET AVE., MUNSTER, IND.

PROJECT: CITY OF CHICAGO - DEPT OF TRANSPORTATION - BUREAU OF BRIDGES AND TRANSIT - IRVING PARK ROAD BRIDGE EXPANSION JOINT REPAIRS - CDOT PROJ NO.: E-1-051
CUSTOMER: C.D.O.T.

HOLES: SEE NOTES
PAINT: SEE NOTES
DRAWN: FDZ CHECKED: MP

CONTRACT NO: 2641
DRAWING NO: 4

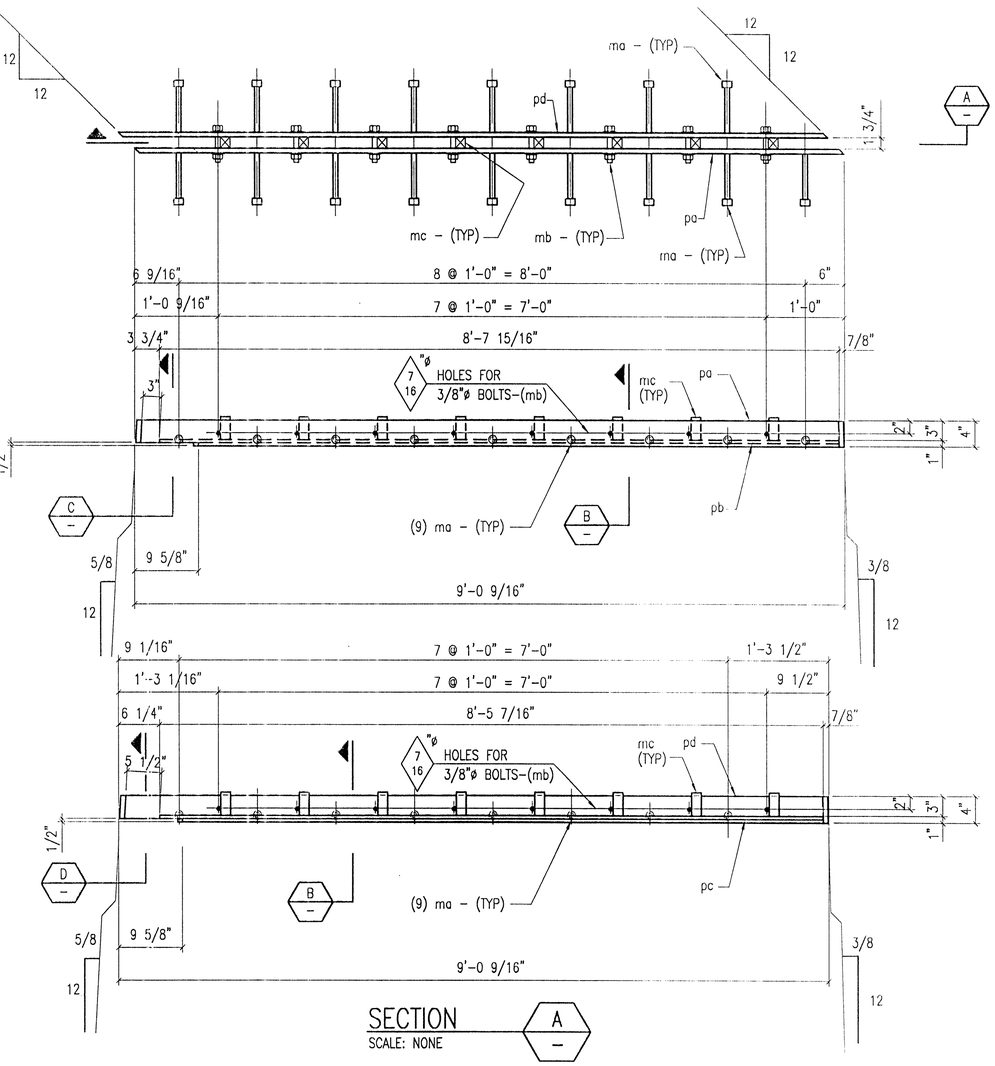

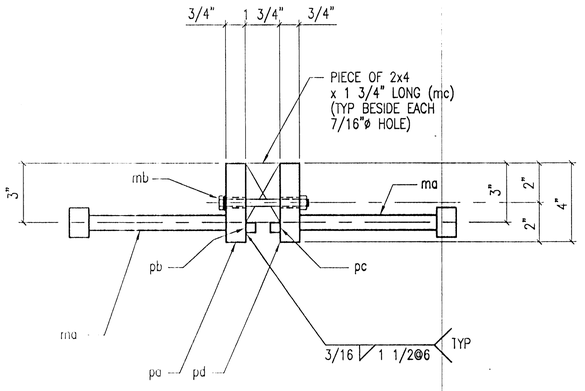

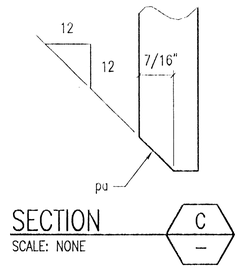

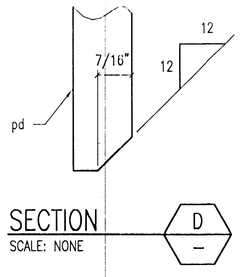

ONE – EXPANSION JOINT – 5WA1-LR

BILL OF MATERIAL

LINE NO	QTY	MARK	DESCRIPTION	REMARKS
1	ONE	5WA1-LR	EXPANSION JOINT	
2	1	pa	PL 3/4" x 4" x 9'-0 9/16"	BEV (2) ENDS
3	1	pb	PL 1/2" x 1/2" x 8'-7 15/16"	
4	1	pc	PL 1/2" x 1/2" x 8'-5 7/16"	
5	1	pd	PL 3/4" x 4" x 9'-0 9/16"	BEV (2) ENDS
6	17	ma	3/4"ø x 8" GRANULAR SOLID FLUX FILLED HEADED STUDS	
7				
8	8	mb	3/8" x 4 1/2" LG STD BOLT W/ HEX NUT AND (1) WASHER EACH	
9				
10	8	mc	WOOD BLOCK 2x4 x 0'-1 3/4" LG	
11				
12				
13				
14				
15				
16				
17				
18				
19				
20				
21				
22				
23				
24				
25				
26				
27				
28				
29				
30				
31				
32				
33				
34				
35				
36				
37				
38				
39				
40				
41				
42				
43				
44				
45				
46				
47				
48				
49				
50				
51				
52				
53				
54				
55				

GENERAL NOTES:

MATERIAL: AASHTO M270 (ASTM A709), GR 36
OPEN HOLES: AS NOTED
SURFACE PREP: SP10
PAINT: YES, ONE SHOP COAT OF INORGANIC ZINC-CARBOZINC II H.S.
WELDING: YES, E70XX ELECTRODES
ERECTION DRAWING: E1 – [redacted] –

1660820135

plot scale: 1=12

4	7-19-02	FAB	8		
3	7-8-02	2ND APPROVAL	7		
2	~~07-08-02~~	~~RELEASE FOR FABRICATION~~	6		
1	06-17-02	APPROVAL	5	12/10/02	"AS BUILT"
	DATE	SENT FOR		DATE	SENT FOR

AMERICAN INSTITUTE OF STEEL CONSTRUCTION INC. FOUNDED 1921
ACTIVE MEMBER
CATEGORY III SHOP

M

UNSTER STEEL CO., INC.
Fabricators of Structural and Miscellaneous Steel
9505 CALUMET AVE., MUNSTER, IND.

PROJECT: CITY OF CHICAGO – DEPT OF TRANSPORTATION – BUREAU OF BRIDGES AND TRANSIT – IRVING PARK ROAD BRIDGE EXPANSION JOINT REPAIRS – CDOT PROJ NO.: E-1-051

CUSTOMER: C.D.O.T.

HOLES SEE NOTES
PAINT SEE NOTES
DRAWN FDZ
CHECKED MP

CONTRACT NO	DRAWING NO
2641	5

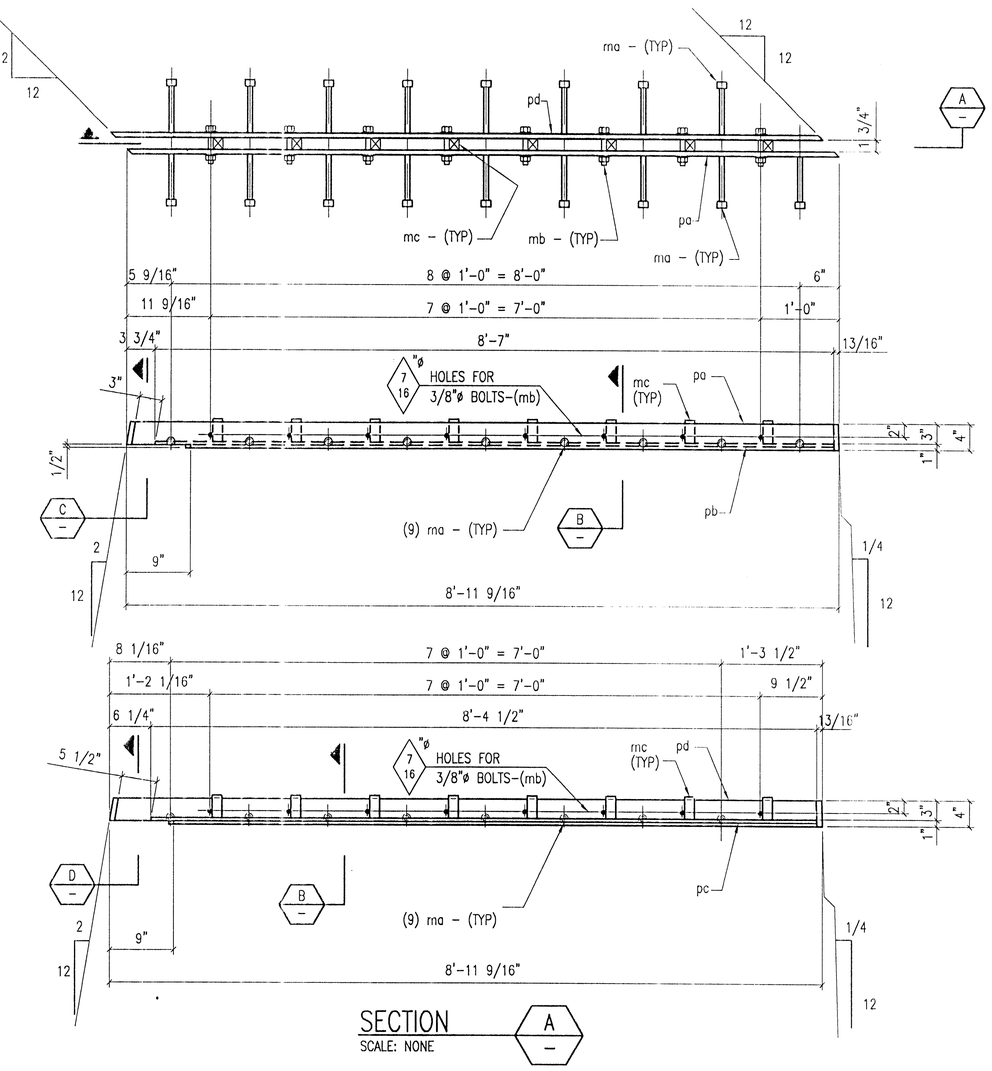

SECTION A
SCALE: NONE

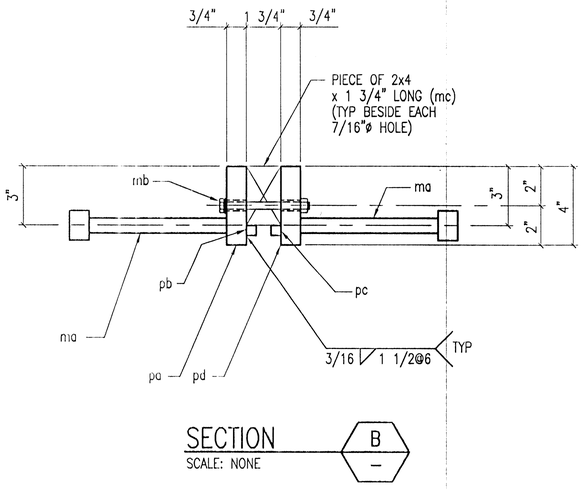

SECTION B
SCALE: NONE

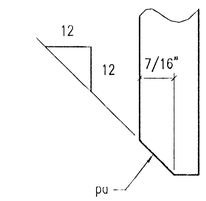

SECTION C
SCALE: NONE

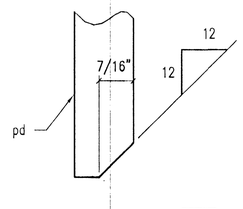

SECTION D
SCALE: NONE

ONE – EXPANSION JOINT – 6EA6–LR

BILL OF MATERIAL

LINE NO	QTY	MARK	DESCRIPTION	REMARKS
1	ONE	6EA6–LR	EXPANSION JOINT	
2	1	pa	PL 3/4" x 4" x 8'–11 9/16"	BEV (2) ENDS
3	1	pb	PL 1/2" x 1/2" x 8'–7"	
4	1	pc	PL 1/2" x 1/2" x 8'–4 1/2"	
5	1	pd	PL 3/4" x 4" x 8'–11 9/16"	BEV (2) ENDS
6	17	ma	3/4"ø x 8" GRANULAR SOLID FLUX FILLED HEADED STUDS	
7				
8	8	mb	3/8" x 4 1/2" LG STD BOLT W/ HEX	
9			NUT AND (1) WASHER EACH	
10	8	mc	WOOD BLOCK 2x4 x 0'–1 3/4" LG	
11–55				

GENERAL NOTES:

MATERIAL: AASHTO M270 (ASTM A709), GR 36
OPEN HOLES: AS NOTED
SURFACE PREP: SP10
PAINT: YES, ONE SHOP COAT OF INORGANIC ZINC–CARBOZINC II H.S.
WELDING: YES, E70XX ELECTRODES
ERECTION DRAWING: E1 [redacted]

– 1660820136 –

plot scale: 1=12

	DATE	SENT FOR		DATE	SENT FOR
4	7-19-02	FAB	8		
3	7-8-02	2ND APPROVAL	7		
2	~~07-08-02~~	~~RELEASE FOR FABRICATION~~	6		
1	06-17-02	APPROVAL	5	12/16/02	"As Built"

ACTIVE MEMBER CATEGORY III SHOP

UNSTER STEEL CO., INC.
Fabricators of Structural and Miscellaneous Steel
9505 CALUMET AVE., MUNSTER, IND.

PROJECT: CITY OF CHICAGO – DEPT OF TRANSPORTATION – BUREAU OF BRIDGES AND TRANSIT – IRVING PARK ROAD BRIDGE EXPANSION JOINT REPAIRS – CDOT PROJ NO.: E-1-051

CUSTOMER: C.D.O.T.

HOLES SEE NOTES
PAINT SEE NOTES
DRAWN FDZ CHECKED MP

CONTRACT NO	DRAWING NO
2641	6

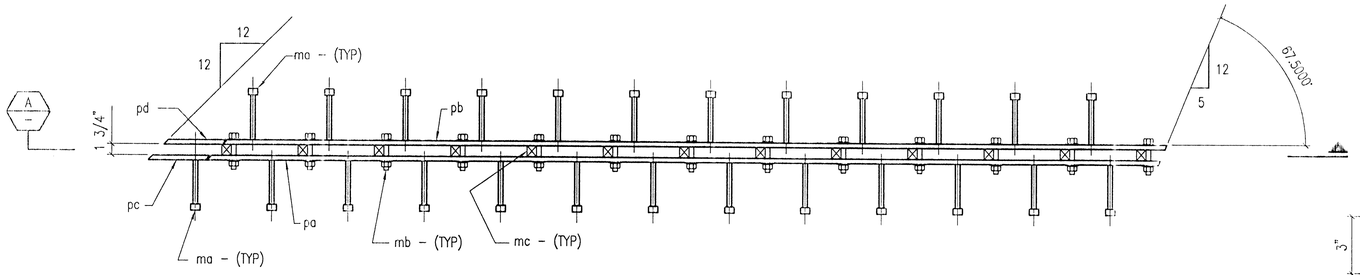

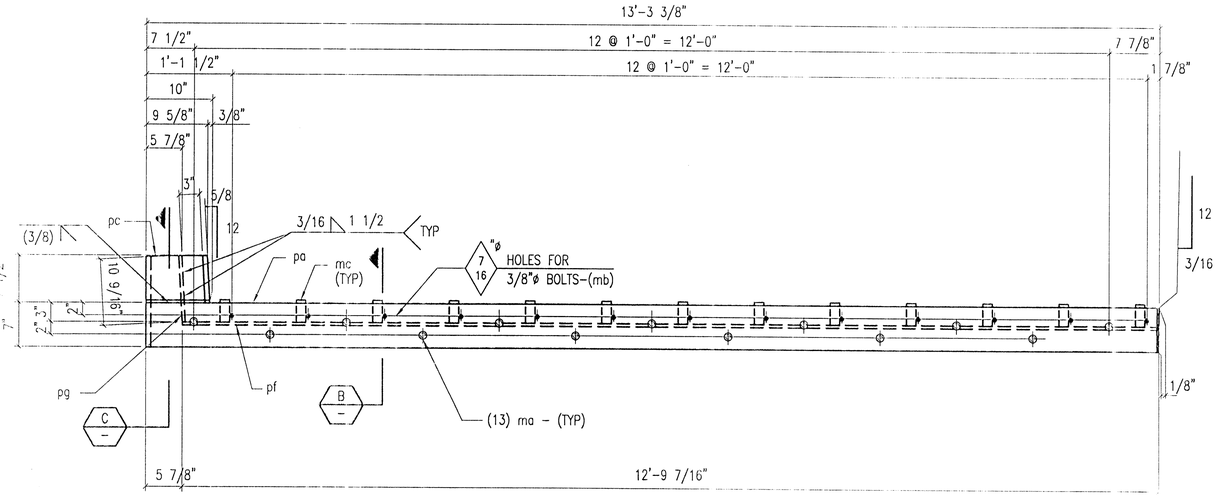

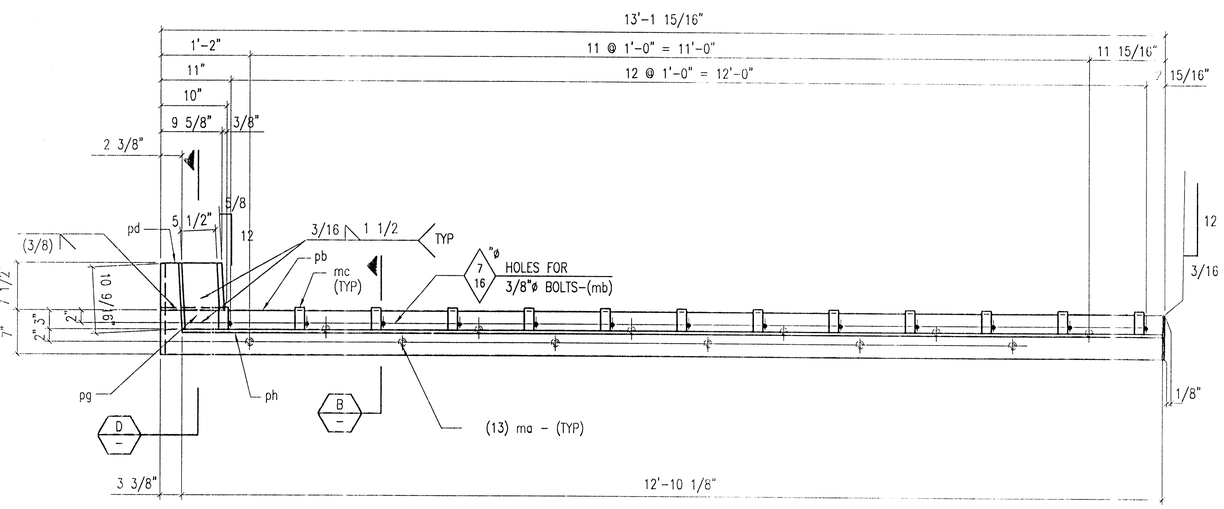

SECTION A
SCALE: NONE

ONE – EXPANSION JOINT – 7EA2–RL

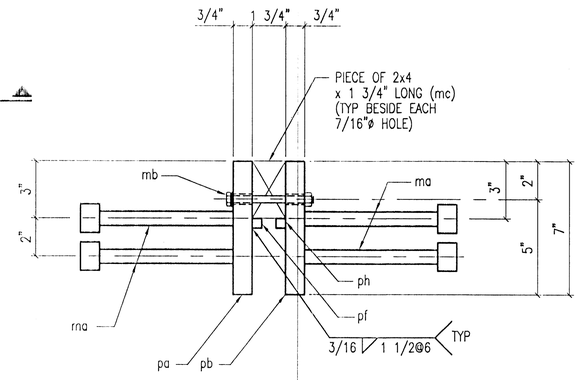

SECTION B
SCALE: NONE

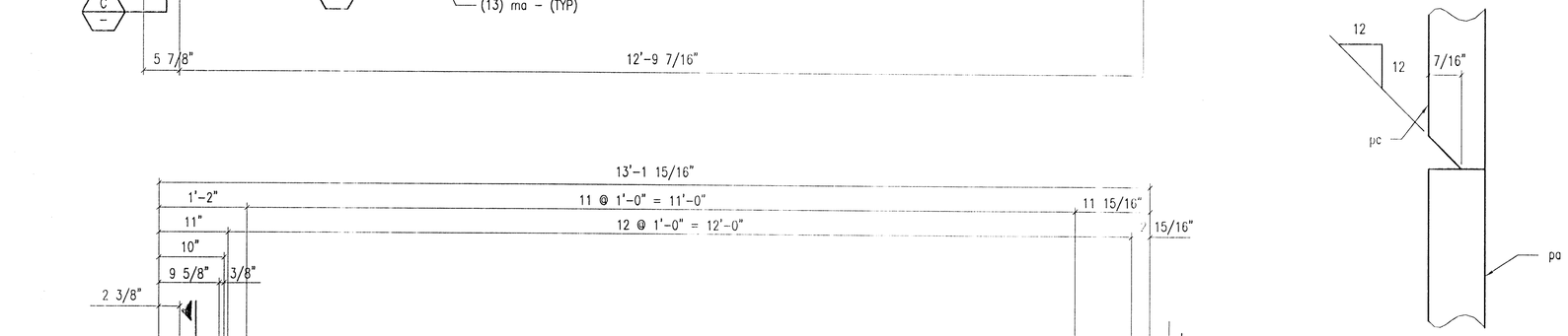

SECTION C
SCALE: NONE

SECTION D
SCALE: NONE

BILL OF MATERIAL

LINE NO	QTY	MARK	DESCRIPTION	REMARKS
1	ONE	7EA2–RL	EXPANSION JOINT	
2	1	pa	PL 3/4" x 7" x 13'-3 3/8"	BEV (2) ENDS
3	1	pb	PL 3/4" x 7" x 13'-1 15/16"	BEV (2) ENDS
4	1	pc	PL 3/4" x 7 1/2" x 0'-10"	BEV (1) END, BEV (1) EDGE
5	1	pd	PL 3/4" x 7 1/2" x 0'-10"	BEV (1) END, BEV (1) EDGE
6	1	pf	PL 1/2" x 1/2" x 12'-9 7/16"	
7	2	pg	PL 1/2" x 1/2" x 0'-10 9/16"	
8	1	ph	PL 1/2" x 1/2" x 12'-10 1/8"	
9	25	ma	3/4"ø x 8" GRANULAR SOLID FLUX	
10			FILLED HEADED STUDS	
11	13	mb	3/8" x 4 1/2" LG STD BOLT W/ HEX	
12			NUT AND (1) WASHER EACH	
13	13	mc	WOOD BLOCK 2x4 x 0'-1 3/4" LG	
14				
15				
16				
17				
18				
19				
20				
21				
22				
23				
24				
25				
26				
27				
28				
29				
30				
31				
32				
33				
34				
35				
36				
37				
38				
39				
40				
41				
42				
43				
44				
45				
46				
47				
48				
49				
50				
51				
52				
53				
54				
55				

GENERAL NOTES:

MATERIAL: AASHTO M270 (ASTM A709), GR 36
OPEN HOLES: AS NOTED
SURFACE PREP: SP10
PAINT: YES, ONE SHOP COAT OF INORGANIC ZINC–CARBOZINC II H.S.
WELDING: YES, E70XX ELECTRODES
ERECTION DRAWING: E1 [redacted]

plot scale: 1=12

1660820137

	DATE	SENT FOR		DATE	SENT FOR
4	7-8-02	FAB	8		
3	7-8-02	2ND APPROVAL	7		
2	~~07-08-02~~	~~RELEASE FOR FABRICATION~~	6		
1	06-17-02	APPROVAL	5	12/16/02	"AS BUILT"

AMERICAN INSTITUTE OF STEEL CONSTRUCTION INC. FOUNDED 1921
ACTIVE MEMBER
CATEGORY III SHOP

UNSTER STEEL CO., INC.
Fabricators of Structural and Miscellaneous Steel
9505 CALUMET AVE., MUNSTER, IND.

PROJECT: CITY OF CHICAGO – DEPT OF TRANSPORTATION – BUREAU OF BRIDGES AND TRANSIT – IRVING PARK ROAD BRIDGE EXPANSION JOINT REPAIRS – CDOT PROJ NO.: E-1-051

CUSTOMER: C.D.O.T.

HOLES: SEE NOTES
PAINT: SEE NOTES
DRAWN: FDZ
CHECKED: MP

CONTRACT NO	DRAWING NO
2641	7

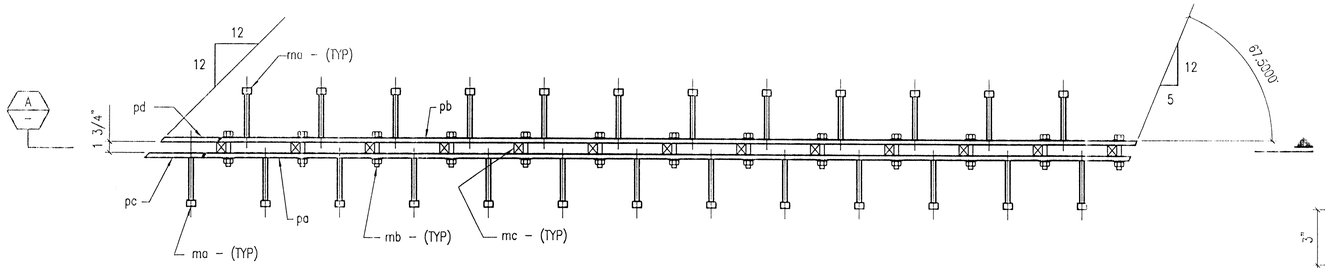

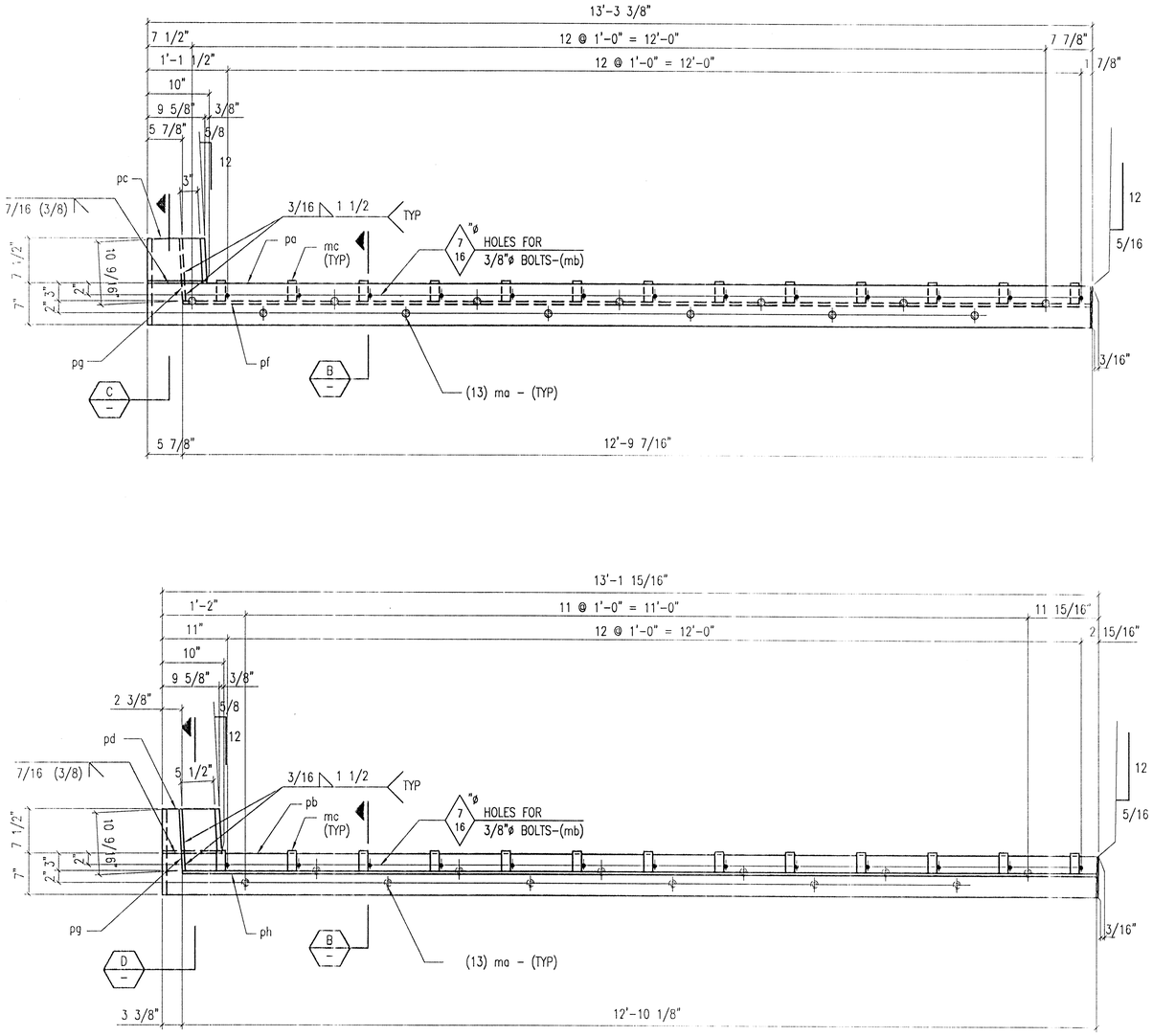

SECTION A
SCALE: NONE

ONE - EXPANSION JOINT - 8WA5-RL

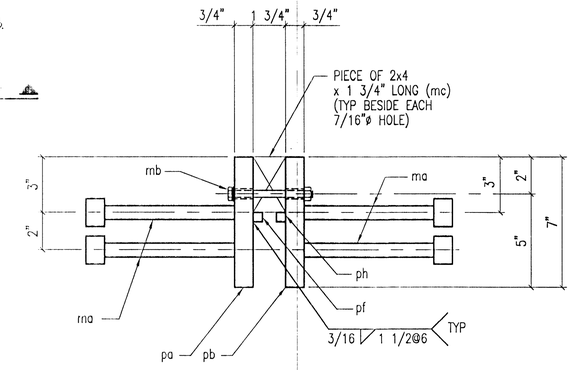

SECTION B
SCALE: NONE

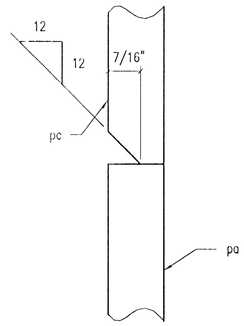

SECTION C
SCALE: NONE

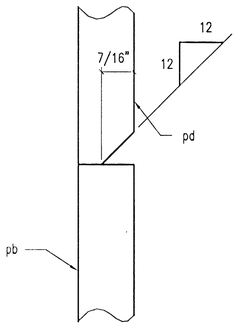

SECTION D
SCALE: NONE

BILL OF MATERIAL

LINE NO	QTY	MARK	DESCRIPTION	REMARKS
1	ONE	8WA5-RL	EXPANSION JOINT	
2	1	pa	PL 3/4" x 7" x 13'-3 3/8"	BEV (2) ENDS
3	1	pb	PL 3/4" x 7" x 13'-1 15/16"	BEV (2) ENDS
4	1	pc	PL 3/4" x 7 1/2" x 0'-10"	BEV (1) END, BEV (1) EDGE
5	1	pd	PL 3/4" x 7 1/2" x 0'-10"	BEV (1) END, BEV (1) EDGE
6	1	pf	PL 1/2" x 1/2" x 12'-9 7/16"	
7	2	pg	PL 1/2" x 1/2" x 0'-10 9/16"	
8	1	ph	PL 1/2" x 1/2" x 12'-10 1/8"	
9	25	ma	3/4"ø x 8" GRANULAR SOLID FLUX FILLED HEADED STUDS	
10	13	mb	3/8" x 4 1/2" LG STD BOLT W/ HEX NUT AND (1) WASHER EACH	
11	13	mc	WOOD BLOCK 2x4 x 0'-1 3/4" LG	
12				
13				
14				
15				
16				
17				
18				
19				
20				
21				
22				
23				
24				
25				
26				
27				
28				
29				
30				
31				
32				
33				
34				
35				
36				
37				
38				
39				
40				
41				
42				
43				
44				
45				
46				
47				
48				
49				
50				
51				
52				
53				
54				
55				

GENERAL NOTES:

MATERIAL: AASHTO M270 (ASTM A709), GR 36
OPEN HOLES: AS NOTED
SURFACE PREP: SP10
PAINT: YES, ONE SHOP COAT OF INORGANIC ZINC-CARBOZINC II H.S.

WELDING: YES, E70XX ELECTRODES
ERECTION DRAWING: E1 [redacted] -
1660820138
plot scale: 1=12

	DATE	SENT FOR		DATE	SENT FOR
4	7-19-02	FAB	8		
3	7-8-02	2ND APPROVAL	7		
2	~~07-08-02~~	~~RELEASE FOR FABRICATION~~	6		
1	06-17-02	APPROVAL	5	12/10/02	"AS BUILT"

UNSTER STEEL CO., INC.
Fabricators of Structural and Miscellaneous Steel
9505 CALUMET AVE., MUNSTER, IND.

PROJECT: CITY OF CHICAGO - DEPT OF TRANSPORTATION - BUREAU OF BRIDGES AND TRANSIT - IRVING PARK ROAD BRIDGE EXPANSION JOINT REPAIRS - CDOT PROJ NO.: E-1-051

CUSTOMER: C.D.O.T.

HOLES: SEE NOTES
PAINT: SEE NOTES
DRAWN: FDZ CHECKED: MP

CONTRACT NO	DRAWING NO
2641	8

AMERICAN INSTITUTE OF STEEL CONSTRUCTION INC. FOUNDED 1921
ACTIVE MEMBER
CATEGORY III SHOP

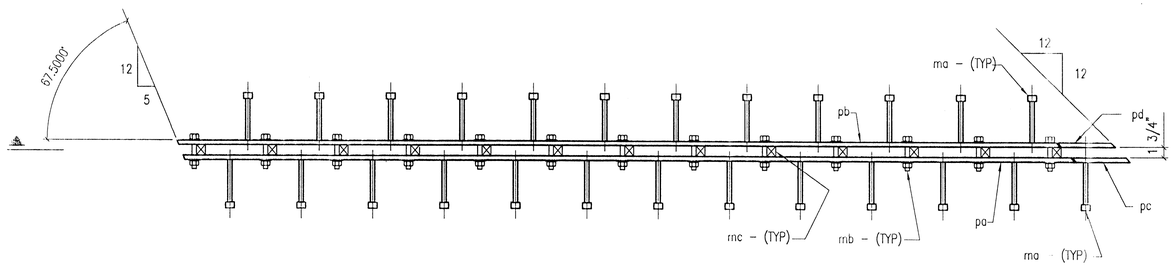

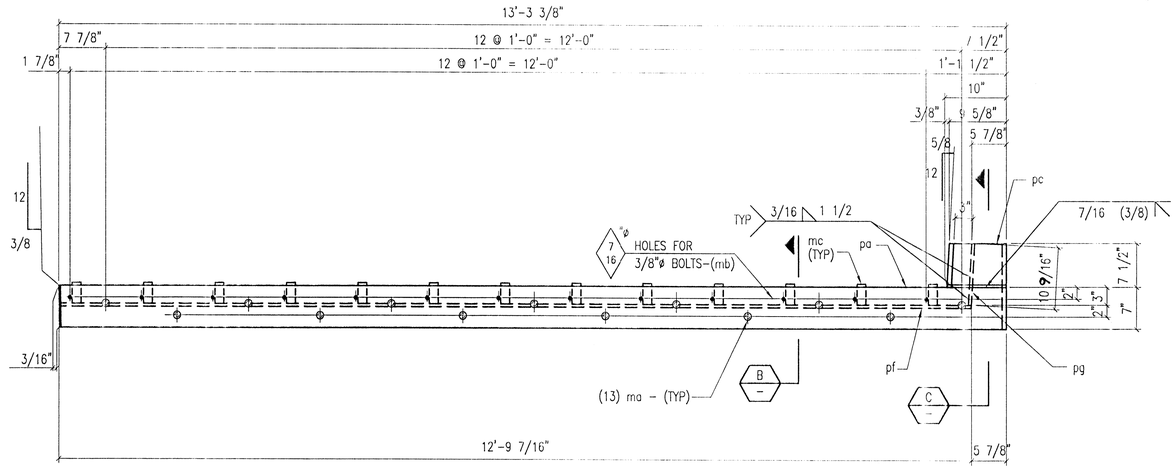

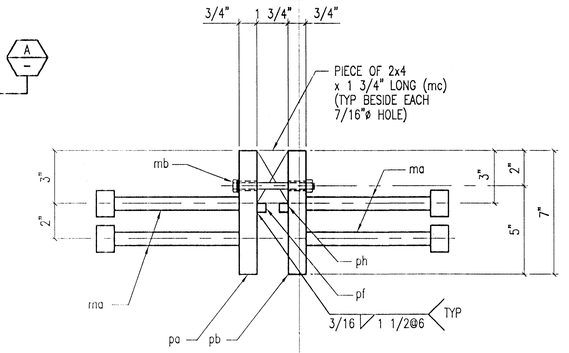

SECTION B
SCALE: NONE

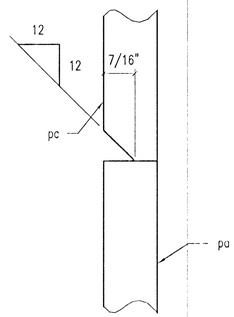

SECTION C
SCALE: NONE

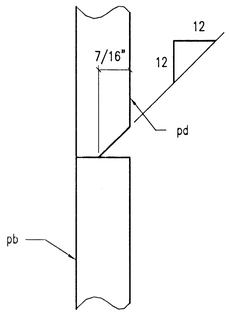

SECTION D
SCALE: NONE

LINE NO	QTY	MARK	DESCRIPTION	REMARKS
1	ONE	9WA2-LR	EXPANSION JOINT	
2	1	pa	PL 3/4" x 7" x 13'-3 3/8"	BEV (2) ENDS
3	1	pb	PL 3/4" x 7" x 13'-1 15/16"	BEV (2) ENDS
4	1	pc	PL 3/4" x 7 1/2" x 0'-10"	BEV (1) END, BEV (1) EDGE
5	1	pd	PL 3/4" x 7 1/2" x 0'-10"	BEV (1) END, BEV (1) EDGE
6	1	pe	PL 1/2" x 1/2" x 12'-9 7/16"	
7	2	pf	PL 1/2" x 1/2" x 0'-10 9/16"	
8	1	ph	PL 1/2" x 1/2" x 12'-10 1/8"	
9	25	ma	3/4"ø x 8" GRANULAR SOLID FLUX FILLED HEADED STUDS	
10	13	mb	3/8" x 4 1/2" LG STD BOLT W/ HEX NUT AND (1) WASHER EACH	
11	13	mc	WOOD BLOCK 2x4 x 0'-1 3/4" LG	
12				
13				
14				
15				
16				
17				
18				
19	1	9M1	360 LIN. FT. OF 2½" PREFORMED NEOPRENE w/Adhesive (WATSON BOWMAN WJ-250 OR EQUAL)	
20				
21				
22				
23				
24				
25				
26				
27				
28				
29				
30				
31				
32				
33				
34				
35				
36				
37				
38				
39				
40				
41				
42				
43				
44				
45				
46				
47				
48				
49				
50				
51				
52				
53				
54				
55				

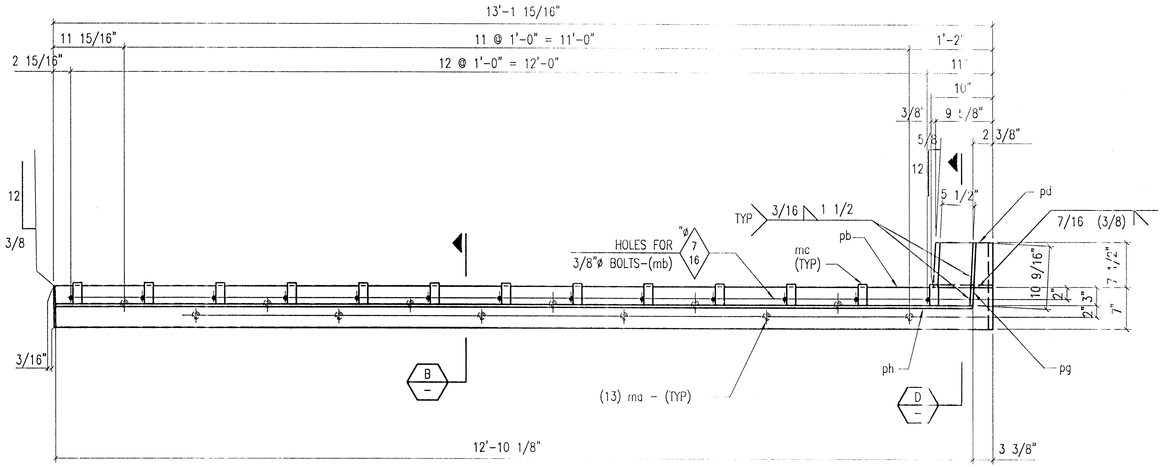

SECTION A
SCALE: NONE

ONE – EXPANSION JOINT – 9WA2-LR

GENERAL NOTES:

MATERIAL: AASHTO M270 (ASTM A709), GR 36

OPEN HOLES: AS NOTED

SURFACE PREP: SP10

PAINT: YES, ONE SHOP COAT OF INORGANIC ZINC-CARBOZINC II H.S.

WELDING: YES, E70XX ELECTRODES

ERECTION DRAWING: E1 [redacted]

1660820139

plot scale: 1=12

	DATE	SENT FOR		DATE	SENT FOR
4	7-10-02	FAB	8		
3	7-8-02	2ND APPROVAL	7		
2	~~07-08-02~~	~~RELEASE FOR FABRICATION~~	6		
1	06-17-02	APPROVAL	5	12/10/02	AS BUILT

AMERICAN INSTITUTE OF STEEL CONSTRUCTION INC. FOUNDED 1921

ACTIVE MEMBER CATEGORY III SHOP

UNSTER STEEL CO., INC.
Fabricators of Structural and Miscellaneous Steel
9505 CALUMET AVE., MUNSTER, IND.

PROJECT: CITY OF CHICAGO – DEPT OF TRANSPORTATION – BUREAU OF BRIDGES AND TRANSIT – IRVING PARK ROAD BRIDGE EXPANSION JOINT REPAIRS – CDOT PROJ NO.: E-1-051

CUSTOMER: C.D.O.T.

HOLES: SEE NOTES
PAINT: SEE NOTES
DRAWN: FDZ CHECKED: MP

CONTRACT NO	DRAWING NO
2641	9

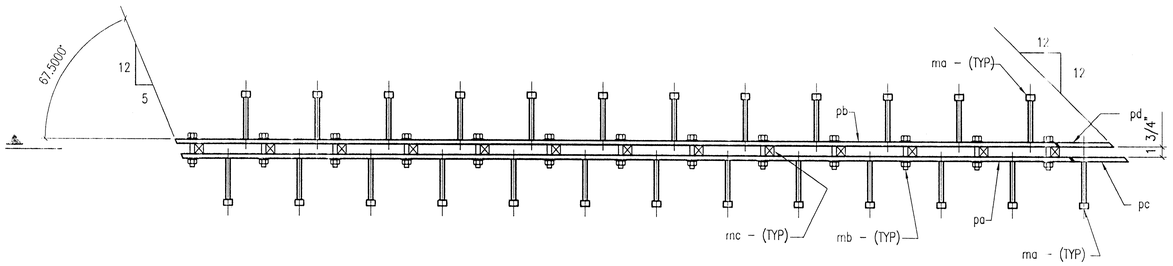

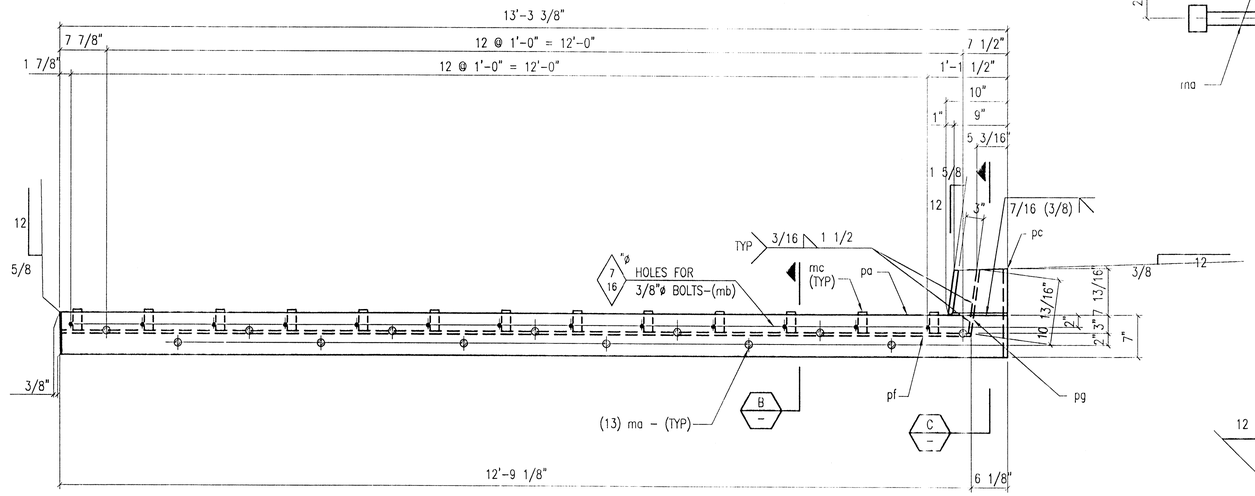

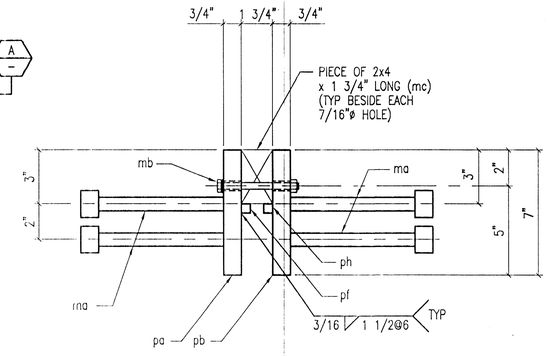

SECTION B
SCALE: NONE

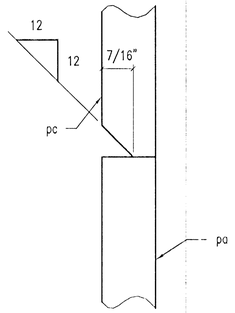

SECTION C
SCALE: NONE

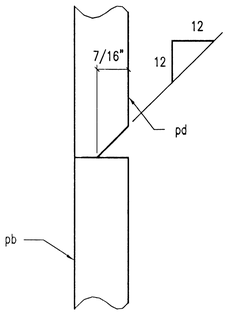

SECTION D
SCALE: NONE

LINE NO	QTY	MARK	DESCRIPTION	REMARKS
1	ONE	10EA5-LR	EXPANSION JOINT	
2	1	pa	PL 3/4" x 7" x 13'-3 3/8"	BEV (2) ENDS
3	1	pb	PL 3/4" x 7" x 13'-1 15/16"	BEV (2) ENDS
4	1	pc	PL 3/4" x 7 13/16" x 0'-10"	BEV (1) END, BEV (1) EDGE
5	1	pd	PL 3/4" x 7 13/16" x 0'-10"	BEV (1) END, BEV (1) EDGE
6	1	pf	PL 1/2" x 1/2" x 12'-9 1/8"	
7	2	pg	PL 1/2" x 1/2" x 0'-10 13/16"	
8	1	ph	PL 1/2" x 1/2" x 12'-9 13/16"	
9	25	ma	3/4"ø x 8" GRANULAR SOLID FLUX	
10			FILLED HEADED STUDS	
11	13	mb	3/8" x 4 1/2" LG STD BOLT W/ HEX	
12			NUT AND (1) WASHER EACH	
13	13	mc	WOOD BLOCK 2x4 x 0'-1 3/4" LG	
14				
15				
16				
17				
18				
19				
20				
21				
22				
23				
24				
25				
26				
27				
28				
29				
30				
31				
32				
33				
34				
35				
36				
37				
38				
39				
40				
41				
42				
43				
44				
45				
46				
47				
48				
49				
50				
51				
52				
53				
54				
55				

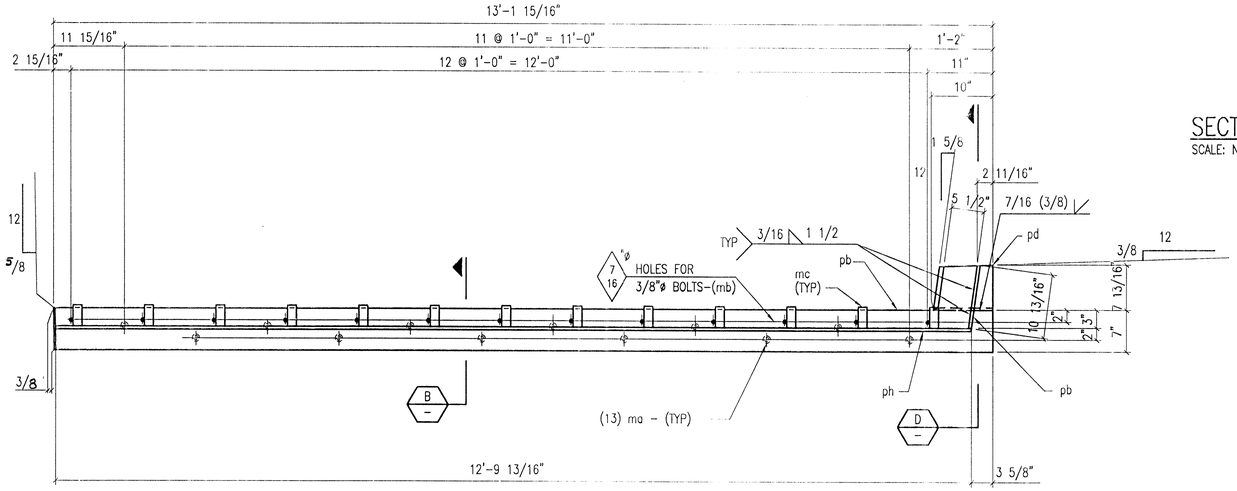

SECTION A
SCALE: NONE

ONE - EXPANSION JOINT - 10EA5-LR

GENERAL NOTES:

MATERIAL: AASHTO M270 (ASTM A709), GR 36

OPEN HOLES: AS NOTED

SURFACE PREP: SP10

PAINT: YES, ONE SHOP COAT OF INORGANIC ZINC-CARBOZINC II H.S.

WELDING: YES, E70XX ELECTRODES

ERECTION DRAWING: E1 [redacted] - 1660820140 -

plot scale: 1=12

	DATE	SENT FOR		DATE	SENT FOR
4	7-19-02	FAB	8		
3	7-8-02	2ND SUBMISSION	7		
2	~~07-08-02~~	~~RELEASE FOR FABRICATION~~	6		
1	06-17-02	APPROVAL	5	12/16/02	"AS built"

ACTIVE MEMBER CATEGORY III SHOP

MUNSTER STEEL CO., INC.
Fabricators of Structural and Miscellaneous Steel
9505 CALUMET AVE., MUNSTER, IND.

PROJECT: CITY OF CHICAGO - DEPT OF TRANSPORTATION - BUREAU OF BRIDGES AND TRANSIT - IRVING PARK ROAD BRIDGE EXPANSION JOINT REPAIRS - CDOT PROJ NO.: E-1-051

CUSTOMER: C.D.O.T.

HOLES: SEE NOTES
PAINT: SEE NOTES
DRAWN: FDZ
CHECKED: MP

CONTRACT NO: 2641
DRAWING NO: 10

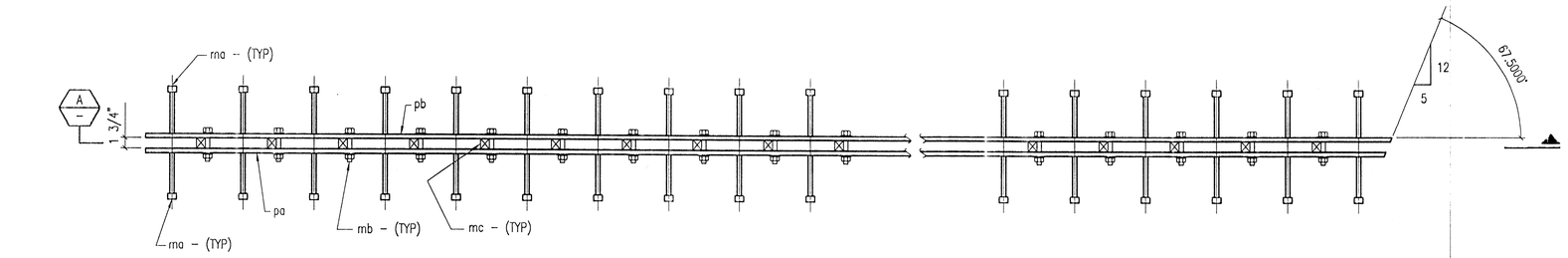

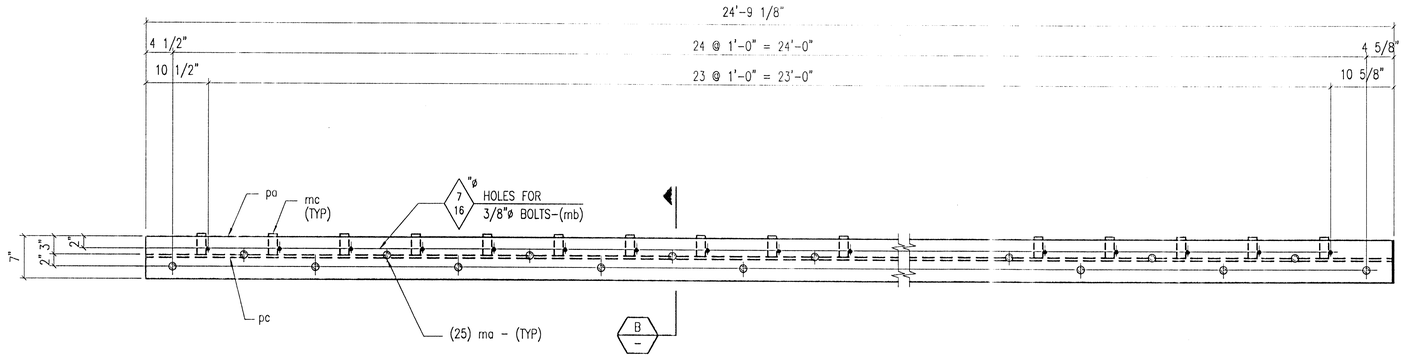

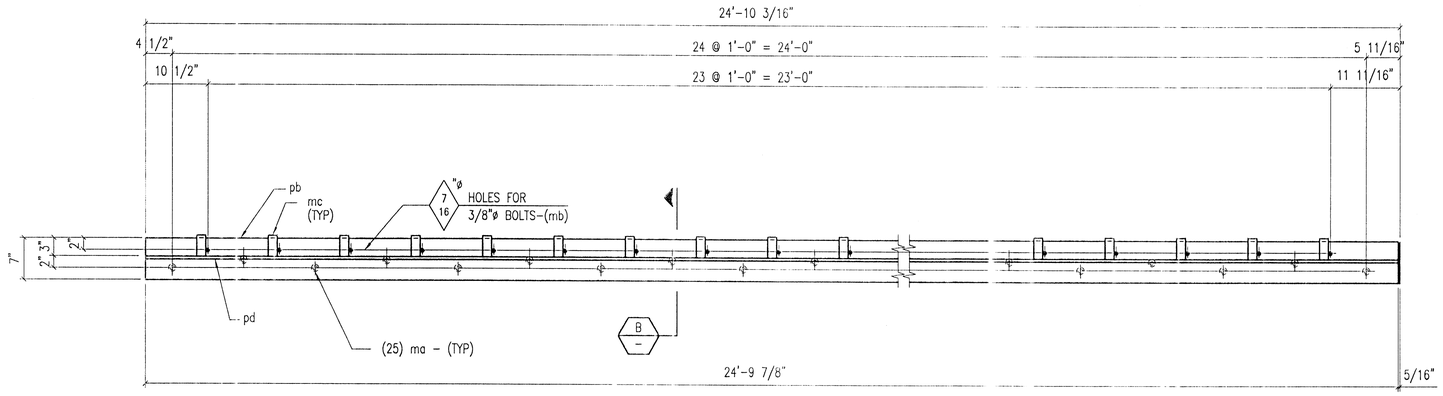

SECTION A
SCALE: NONE

ONE – EXPANSION JOINT – 11EA4-LR
ONE – EXPANSION JOINT – 11WA3-LR
NOTE: ALIKE EXCEPT FOR SHIPPING MARKS

BILL OF MATERIAL

LINE NO	QTY	MARK	DESCRIPTION	REMARKS
1	ONE	11EA4-LR	EXPANSION JOINT	
2	1	pa	PL 3/4" x 7" x 24'-9 1/8"	BEV (1) END
3	1	pb	PL 3/4" x 7" x 24'-10 3/16"	BEV (1) END
4	1	pc	PL 1/2" x 1/2" x 24'-9 1/8"	
5	1	pd	PL 1/2" x 1/2" x 24'-9 7/8"	
6	50	ma	3/4"ø x 8" GRANULAR SOLID FLUX	
7			FILLED HEADED STUDS	
8	24	mb	3/8" x 4 1/2" LG STD BOLT W/ HEX	
9			NUT AND (1) WASHER EACH	
10	24	mc	WOOD BLOCK 2x4 x 0'-1 3/4" LG	
11				
12				
13	ONE	11WA3-LR	EXPANSION JOINT	
14	1	pa	PL 3/4" x 7" x 24'-9 1/8"	BEV (1) END
15	1	pb	PL 3/4" x 7" x 24'-10 3/16"	BEV (1) END
16	1	pc	PL 1/2" x 1/2" x 24'-9 1/8"	
17	1	pd	PL 1/2" x 1/2" x 24'-9 7/8"	
18	50	ma	3/4"ø x 8" GRANULAR SOLID FLUX	
19			FILLED HEADED STUDS	
20	24	mb	3/8" x 4 1/2" LG STD BOLT W/ HEX	
21			NUT AND (1) WASHER EACH	
22	24	mc	WOOD BLOCK 2x4 x 0'-1 3/4" LG	
23				
24				
25				
26				
27				
28				
29				
30				
31				
32				
33				
34				
35				
36				
37				
38				
39				
40				

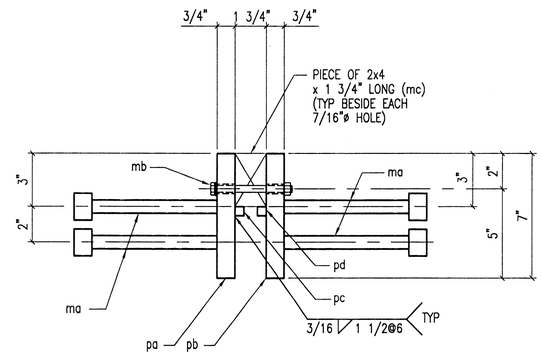

SECTION B
SCALE: NONE

GENERAL NOTES:

MATERIAL:	AASHTO M270 (ASTM A709), GR 36
OPEN HOLES:	AS NOTED
SURFACE PREP:	SP10
PAINT:	YES, ONE SHOP COAT OF INORGANIC ZINC-CARBOZINC II H.S.
WELDING:	YES, E70XX ELECTRODES
ERECTION DRAWING:	E1

AMERICAN INSTITUTE OF STEEL CONSTRUCTION INC. FOUNDED 1921
ACTIVE MEMBER CATEGORY III SHOP

[redacted]
1660820141

plot scale: 1=12

	DATE	SENT FOR		DATE	SENT FOR
4	7-19-02	FAB	8		
3	7-8-02	2ND APPROVAL			
2	~~07-08-02~~	RELEASE FOR FABRICATION	6		
1	06-17-02	APPROVAL	5	12/16/02	"AS BUILT"

M

UNSTER STEEL CO., INC.
Fabricators of Structural and Miscellaneous Steel
9505 CALUMET AVE., MUNSTER, IND.

PROJECT: CITY OF CHICAGO – DEPT OF TRANSPORTATION – BUREAU OF BRIDGES AND TRANSIT – IRVING PARK ROAD BRIDGE EXPANSION JOINT REPAIRS – CDOT PROJ NO.: E-1-051

CUSTOMER: C.D.O.T.

HOLES: SEE NOTES
PAINT: SEE NOTES
DRAWN: FDZ
CHECKED: MP

CONTRACT NO: 2641
DRAWING NO: 11

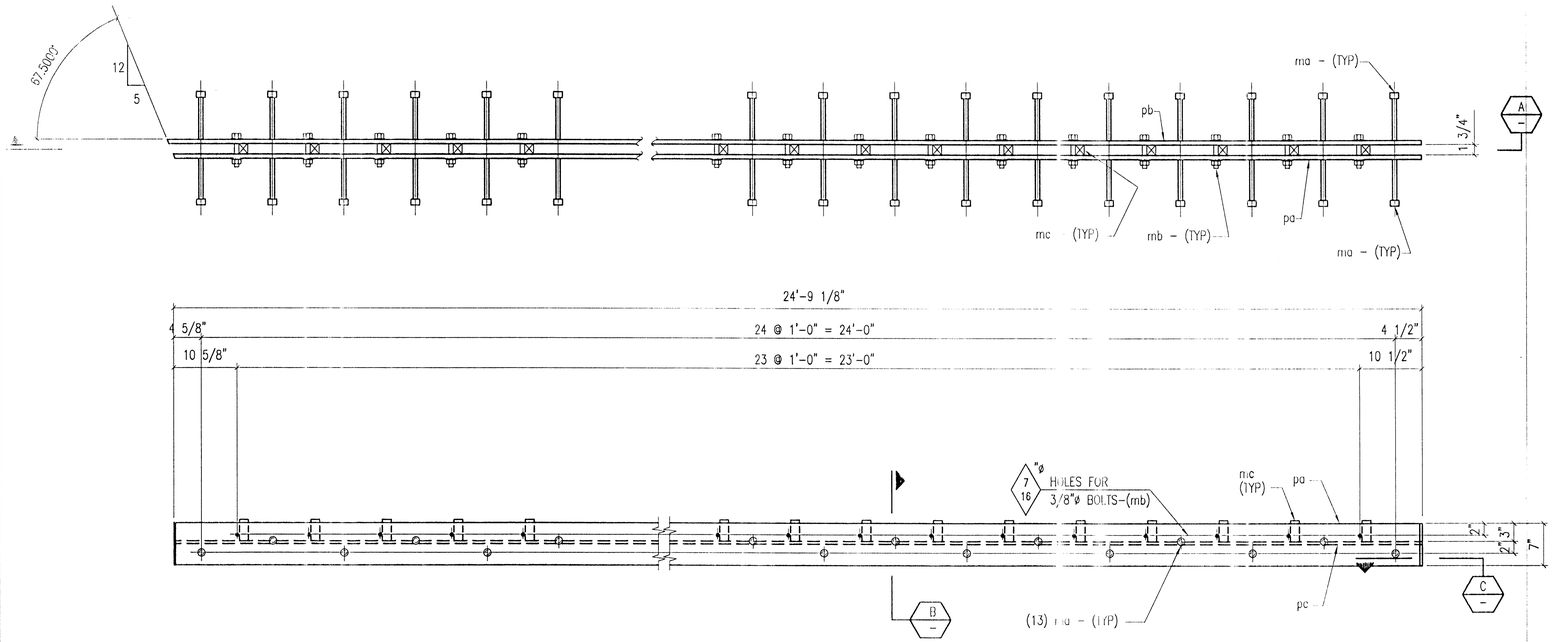

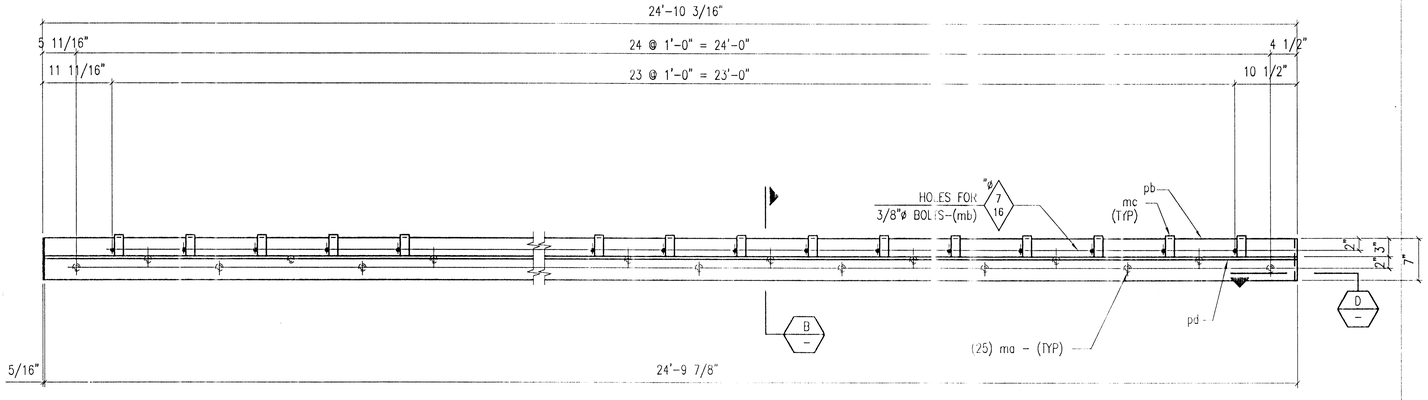

SECTION A
SCALE: NONE

ONE – EXPANSION JOINT – 12EA3–RL
ONE – EXPANSION JOINT – 12WA4–RL
NOTE: ALIKE EXCEPT FOR SHIPPING MARKS

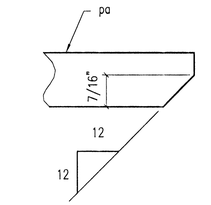

SECTION C
SCALE: NONE

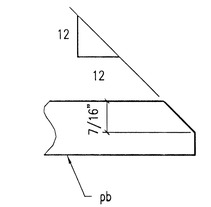

SECTION D
SCALE: NONE

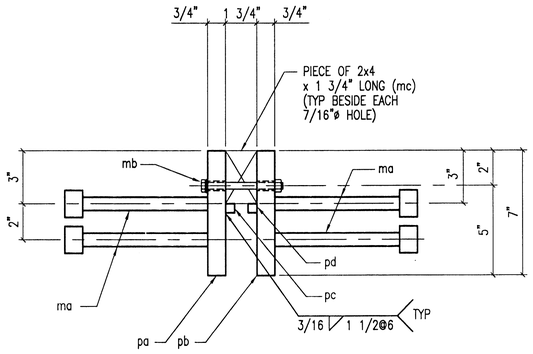

SECTION B
SCALE: NONE

BILL OF MATERIAL

LINE NO	QTY	MARK	DESCRIPTION	REMARKS
1	ONE	11EA4–LR	EXPANSION JOINT	
2	1	pa	PL 3/4" x 7" x 24'-9 1/8"	BEV (2) ENDS
3	1	pb	PL 3/4" x 7" x 24'-10 3/16"	BEV (2) ENDS
4	1	pc	PL 1/2" x 1/2" x 24'-9 1/8"	
5	1	pd	PL 1/2" x 1/2" x 24'-9 7/8"	
6	50	ma	3/4"ø x 8" GRANULAR SOLID FLUX	
7			FILLED HEADED STUDS	
8	24	mb	3/8" x 4 1/2" LG STD BOLT W/ HEX	
9			NUT AND (1) WASHER EACH	
10	24	mc	WOOD BLOCK 2x4 x 0'-1 3/4" LG	
11				
12				
13	ONE	11WA3–LR	EXPANSION JOINT	
14	1	pa	PL 3/4" x 7" x 24'-9 1/8"	BEV (2) ENDS
15	1	pb	PL 3/4" x 7" x 24'-10 3/16"	BEV (2) ENDS
16	1	pc	PL 1/2" x 1/2" x 24'-9 1/8"	
17	1	pd	PL 1/2" x 1/2" x 24'-9 7/8"	
18	50	ma	3/4"ø x 8" GRANULAR SOLID FLUX	
19			FILLED HEADED STUDS	
20	24	mb	3/8" x 4 1/2" LG STD BOLT W/ HEX	
21			NUT AND (1) WASHER EACH	
22	24	mc	WOOD BLOCK 2x4 x 0'-1 3/4" LG	
23				
24				
25				
26				
27				
28				
29				
30				
31				
32				
33				
34				
35				
36				
37				
38				
39				
40				

GENERAL NOTES:

MATERIAL:	AASHTO M270 (ASTM A709), GR 36
OPEN HOLES:	AS NOTED
SURFACE PREP:	SP10
PAINT:	YES, ONE SHOP COAT OF INORGANIC ZINC–CARBOZINC II H.S.
WELDING:	YES, E70XX ELECTRODES
ERECTION DRAWING:	E1

AMERICAN INSTITUTE OF STEEL CONSTRUCTION ★ FOUNDED 1921 ★
ACTIVE MEMBER CATEGORY III SHOP

1660820142

plot scale: 1=12

	DATE	SENT FOR		DATE	SENT FOR
4	7-19-02	FAB	8		
3	7-8-02	2ND APPROVAL	7		
2	~~07-08-02~~	~~RELEASE FOR FABRICATION~~	6		
1	06-17-02	APPROVAL	5	12/16/02	"AS BUILT"

UNSTER STEEL CO., INC.
Fabricators of Structural and Miscellaneous Steel
9505 CALUMET AVE., MUNSTER, IND.

PROJECT: CITY OF CHICAGO – DEPT OF TRANSPORTATION – BUREAU OF BRIDGES AND TRANSIT – IRVING PARK ROAD BRIDGE EXPANSION JOINT REPAIRS – CDOT PROJ NO.: E-1-051

CUSTOMER: C.D.O.T.

HOLES: SEE NOTES
PAINT: SEE NOTES
DRAWN: FDZ
CHECKED: MP

CONTRACT NO	DRAWING NO
2641	12

APPENDIX 1 - CONSTRUCTION
ePROCUREMENT

This is an eProcurement Bid. Bids are to be submitted through the City's "iSupplier" system, the City's eProcurement computer system for electronic bidding and providing Contractors with access to contract, ordering and payment information for their City contracts. The following provisions apply to this bid and supersede any conflicting provisions in Books 1, 2, and 3.

1. Obtaining the Bid Documents
Bidders are solely responsible for obtaining all Bid Documents, including Clarifications and Addenda. Documents may be downloaded from the Department of Procurement Service's ("DPS") website at the following URL:

http://www.cityofchicago.org/eProcurement

Click on "Current Bids."

In order to receive notice of clarifications and addenda, Bidders must be registered for and log-in to iSupplier, search for the solicitation number, open the solicitation for review, and accept the disclaimer. This will sign Bidders up for notifications.

Bid Document Holders are listed on the Bid & Bond Room Opportunity Take Out List. The Opportunity Take Out List is public information and is posted to the DPS web site at www.cityofchicago.org/TOL. To find Opportunity Take Out lists go to "GetStarted Online" and search by the specification number.

2. Clarifications and Addenda
The City will send an email notification to suppliers who have indicated intent in a Bid that an addendum or clarification has been issued. The Clarifications and Addenda incorporated into the electronic bid document available at the following URL:

https://www.cityofchicago.org/eProcurement

Suppliers that have indicated interest in a Bid will receive email notification that an addendum or clarification has been issued. There may be multiple Clarifications and Addenda. Failure to obtain Clarifications and/or Addenda, for whatever cause, will not relieve a Bidder from the obligation to bid according to and comply with any changed or additional terms and conditions contained in the Clarifications and Addenda.

Electronic Acknowledgement of Clarifications and/or Addenda is mandatory to submit an electronic Bid. Any harm to the bidder resulting from failure to obtain all necessary documents, for whatever cause, will not be valid grounds for a protest against award(s) made under this bid solicitation.

3. Questions Regarding the Bid Documents; Bidder Inquiry Deadline
All inquiries regarding the Bid Documents or procurement process may be directed to the Procurement Specialist/Senior Procurement Specialist in iSupplier via online discussion or via email at the email address listed on the front cover of the Bid Documents.

The Bidder Inquiry Deadline is listed on the front cover of the Bid Documents under "Deadline for Questions." Inquiries received after the Bidder Inquiry Deadline will not be answered except at the discretion of the Chief Procurement Officer.

Bidders may only rely on written answers in a Clarification or in an Addendum duly issued by the Chief Procurement Officer. Bidders cannot rely on oral or informal responses; such answers will not be binding upon the City.

4. Completion of the Bid Documents

Each Bidder must complete all of the forms listed on the Bid Submittal Checklist (with the exception of the Proposal Pages) in the Requirements section and scan and upload them as attachments to the electronic bid submission. Bidders may not change any of the Bid Documents. Any changes made by a Bidder to the Bid Documents may result in rejection of the Bid, and will not be binding upon the City.

Bidders must submit their pricing electronically by filling out bid lines in the electronic Price Schedule in the iSupplier system.

Bidders must use the Bid Execution Page that is appropriate for their form of business organization (e.g., sole proprietorship, corporation, partnership, or joint venture). The individual(s) that sign the Bid Execution Page on behalf of the Bidder, by their signature, represents and warrants to the City that such individual is authorized to execute bids and contracts on behalf of the Bidder, and that the Bidder agrees and shall be bound to all of the terms and conditions of the Bid Documents and, upon execution by the City, the Contract Documents. Signatures must be sworn before a Notary Public. The form must be printed, signed, notarized and scanned then uploaded as an attachment to the electronic bid submission.

5. Date, Time, and Place

Bids are to be submitted electronically to the Department of Procurement on the date and prior to the time stated on the Cover Page of the Bid Documents, or any addendum issued by the City to change such Bid Opening Date. No bid will be accepted after the Bid Opening Date. The time of the receipt of the bid will be determined solely by the "Time of Quote" generated by the iSupplier system.

6. **Bid Deposit**

5% of the Total Base Bid

When submitting an electronic bid, scan and upload a copy of your bid deposit with your submittal documents. The 1st and 2nd apparent low bidders will be required to deliver their original and properly executed bid deposit to the Bid & Bond Room within 2 business days following the Bid Opening Date.